brother

USER'S GUIDE

DCP-9040CN
DCP-9042CDN

Version 0

USA/CAN

If you need to call Customer Service

Please complete the following information for future reference:

Model Number: DCP-9040CN and DCP-9042CDN (circle your model number)

Serial Number: [1] _____

Date of Purchase: _____

Place of Purchase: _____

[1] The serial number is on the back of the unit. Retain this User's Guide with your sales receipt as a permanent record of your purchase, in the event of theft, fire or warranty service.

Register your product on-line at

http://www.brother.com/registration/

By registering your product with Brother, you will be recorded as the original owner of the product. Your registration with Brother:

- may serve as confirmation of the purchase date of your product should you lose your receipt;
- may support an insurance claim by you in the event of product loss covered by insurance; and,
- will help us notify you of enhancements to your product and special offers.

The most convenient and efficient way to register your new product is online at http://www.brother.com/registration/

© 2007 Brother Industries, Ltd.

Brother numbers

IMPORTANT

For technical help, you must call the country where you bought the machine. Calls must be made ***from within*** that country.

Register your product

By registering your product with Brother International Corporation, you will be recorded as the original owner of the product. Your registration with Brother:

- may serve as confirmation of the purchase date of your product should you lose your receipt;
- may support an insurance claim by you in the event of product loss covered by insurance; and,
- will help us notify you of enhancements to your product and special offers.

Please complete and fax the Brother Warranty Registration And Test Sheet or, for your convenience and most efficient way to register your new product, register on-line at

http://www.brother.com/registration/

FAQs (frequently asked questions)

The Brother Solutions Center is our one-stop resource for all your Digital Copier/Printer needs. You can download the latest software and utilities and read FAQs and troubleshooting tips to learn how to get the most from your Brother product.

http://solutions.brother.com/

Note

You can check here for Brother driver updates.

To keep your machine performance up to date, check here for the latest firmware upgrade (for Windows® only).

For Customer Service

In USA:	1-877-BROTHER (1-877-276-8437)
	1-901-379-1215 (fax)
In Canada:	1-877-BROTHER
	(514) 685-4898 (fax)

Service Center Locator (USA only)

For the location of a Brother authorized service center, call 1-877-BROTHER (1-877-276-8437).

Service Center Locations (Canada only)

For the location of a Brother authorized service center, call 1-877-BROTHER.

Ordering accessories and supplies

For best quality results use only genuine Brother accessories, which are available at most Brother retailers. If you cannot find the accessory you need and you have a Visa, MasterCard, Discover, or American Express credit card, you can order accessories directly from Brother. (You can visit us online for a complete selection of the Brother accessories and supplies that are available for purchase.)

Note

In Canada only Visa and MasterCard are accepted.

In USA: 1-877-552-MALL (1-877-552-6255)

1-800-947-1445 (fax)

http://www.brothermall.com/

In Canada: 1-877-BROTHER

http://www.brother.ca/

Description	Item	
Toner Cartridge Standard	Black:	TN-110BK (Prints approx. 2,500 pages)
	Cyan:	TN-110C (Prints approx. 1,500 pages)
	Magenta:	TN-110M (Prints approx. 1,500 pages)
	Yellow:	TN-110Y (Prints approx. 1,500 pages)
Toner Cartridge High Yield	Black:	TN-115BK (Prints approx. 5,000 pages)
	Cyan:	TN-115C (Prints approx. 4,000 pages)
	Magenta:	TN-115M (Prints approx. 4,000 pages)
	Yellow:	TN-115Y (Prints approx. 4,000 pages)
Drum Unit	DR-110CL	
Belt Unit	BU-100CL	
Waste Toner Box	WT-100CL	
User's Guide	LS3370001 (English for USA and Canada)	
	LS3370002 (French for Canada)	
Quick Setup Guide	LS3371001 (English for USA and Canada)	
	LS3371002 (French for Canada)	

Notice - Disclaimer of Warranties (USA and Canada)

BROTHER'S LICENSOR(S), AND THEIR DIRECTORS, OFFICERS, EMPLOYEES OR AGENTS (COLLECTIVELY BROTHER'S LICENSOR) MAKE NO WARRANTIES, EXPRESS OR IMPLIED, INCLUDING WITHOUT LIMITATION THE IMPLIED WARRANTIES OF MERCHANTABILITY AND FITNESS FOR A PARTICULAR PURPOSE, REGARDING THE SOFTWARE. BROTHER'S LICENSOR(S) DOES NOT WARRANT, GUARANTEE OR MAKE ANY REPRESENTATIONS REGARDING THE USE OR THE RESULTS OF THE USE OF THE SOFTWARE IN TERMS OF ITS CORRECTNESS, ACCURACY, RELIABILITY, CURRENTNESS OR OTHERWISE. THE ENTIRE RISK AS TO THE RESULTS AND PERFORMANCE OF THE SOFTWARE IS ASSUMED BY YOU. THE EXCLUSION OF IMPLIED WARRANTIES IS NOT PERMITTED BY SOME STATES IN THE USA AND SOME PROVINCES IN CANADA. THE ABOVE EXCLUSION MAY NOT APPLY TO YOU.

IN NO EVENT WILL BROTHER'S LICENSOR(S) BE LIABLE TO YOU FOR ANY CONSEQUENTIAL, INCIDENTAL OR INDIRECT DAMAGES (INCLUDING DAMAGES FOR LOSS OF BUSINESS PROFITS, BUSINESS INTERRUPTION, LOSS OF BUSINESS INFORMATION, AND THE LIKE) ARISING OUT OF THE USE OR INABILITY TO USE THE SOFTWARE EVEN IF BROTHER'S LICENSOR HAS BEEN ADVISED OF THE POSSIBILITY OF SUCH DAMAGES. BECAUSE SOME STATES IN THE USA AND SOME PROVINCES IN CANADA DO NOT ALLOW THE EXCLUSION OR LIMITATION OF LIABILITY FOR CONSEQUENTIAL OR INCIDENTAL DAMAGES, THE ABOVE LIMITATIONS MAY NOT APPLY TO YOU. IN ANY EVENT BROTHER'S LICENSOR'S LIABILITY TO YOU FOR ACTUAL DAMAGES FROM ANY CAUSE WHATSOEVER, AND REGARDLESS OF THE FORM OF THE ACTION (WHETHER IN CONTRACT, TORT (INCLUDING NEGLIGENCE), PRODUCT LIABILITY OR OTHERWISE), WILL BE LIMITED TO $50.

Compilation and Publication Notice

Under the supervision of Brother Industries Ltd., this manual has been compiled and published, covering the latest product descriptions and specifications.

The contents of this manual and the specifications of this product are subject to change without notice.

Brother reserves the right to make changes without notice in the specifications and materials contained herein and shall not be responsible for any damages (including consequential) caused by reliance on the materials presented, including but not limited to typographical and other errors relating to the publication.

Brother® Color Laser One-Year On-Site Limited Warranty (USA only)

Who is covered:

- This limited warranty ("warranty") is given only to the original end-user/retail purchaser (referred to in this warranty as "Original Purchaser") of the accompanying product, consumables and accessories (collectively referred to in this warranty as "this Product").
- If you purchased a product from someone other than an authorized Brother reseller in the United States or if the product was used (including but not limited to floor models or refurbished product), prior to your purchase you are not the Original Purchaser and the product that you purchased is not covered by this warranty.

What is covered:

- This Product includes a Machine and Consumable and Accessory Items. Consumable and Accessory Items include but are not limited to Toner Cartridges, Drum Unit, Belt Unit, and Waste Toner Box.
- Except as otherwise provided herein, Brother warrants that the Machine and the accompanying Consumable and Accessory Items will be free from defects in materials and workmanship, when used under normal conditions.
- This warranty applies only to products purchased and used in the United States. For products purchased in, but used outside, the United States, this warranty covers only warranty service within the United States (and does not include shipping outside the United States).

What is the length of the Warranty Periods:

- Machines: one year from the original purchase date.
- Accompanying Consumable and Accessory Items: 90 days from the original purchase date or the rated life of consumable, whichever comes first.

What is NOT covered:

This warranty does not cover:

1. Physical damage to this Product;
2. Damage caused by improper installation, improper or abnormal use, misuse, neglect or accident (including but not limited to transporting this Product without the proper preparation and/or packaging);
3. Damage caused by another device or software used with this Product (including but not limited to damage resulting from use of non Brother®-brand parts and Consumable and Accessory Items);
4. Consumable and Accessory Items that expired in accordance with a rated life;
5. Problems arising from other than defects in materials or workmanship; and,
6. Normal Periodic Maintenance Items, such as Paper Feeding Kit, Fuser and Laser Units.

This limited warranty is VOID if this Product has been altered or modified in any way (including but not limited to attempted warranty repair without authorization from Brother and/or alteration/removal of the serial number).

What to do if you think your Product is eligible for warranty service:

Report your issue to our Customer Service Hotline at 1-877-BROTHER (1-877-276-8437) or to a Brother Authorized Service Center **within the applicable warranty period**. Supply Brother or the Brother Authorized Service Center with a copy of your dated bill of sale showing that this Product was purchased within the U.S. For the name of local Brother Authorized Service Center(s), call 1-877-BROTHER (1-877-276-8437) or visit www.brother-usa.com.

What Brother will ask you to do:

After contacting Brother or a Brother Authorized Service Center, you may be required to provide information pertaining to the defect or malfunction of this Product.

Brother® Color Laser One-Year On-Site Limited Warranty (USA only)

What Brother will do:

If the problem reported concerning your Machine and/or accompanying Consumable and Accessory Items is covered by this warranty and if you first reported the problem to Brother or an Authorized Service Center within the applicable warranty period, Brother or its Authorized Service Center will evaluate your report of a possible defect to determine whether a defect exists, and if it does exist, Brother or an Authorized Service Center will provide "On-site Warranty Service" during "Normal Working Hours" and will repair the Machine and/or accompanying Consumable and Accessory Items at no charge to you for parts or labor. "On-site Warranty Service" shall consist of the remedial service, as necessitated by normal usage, to restore this product to good operating condition at your location and does not guarantee uninterrupted operation of this Product. "Normal Working Hours" shall mean 9:00am to 5:00pm (local time), Monday through Friday, excluding legal and local holidays observed by Brother or the Authorized Service Center.

If the Machine and/or accompanying Consumable and Accessory Items are not covered by this warranty, you will be charged for any service and/or replacement parts/products at Brother's or the Authorized Service Center's then current published rates.

The foregoing are your sole (i.e., only) and exclusive remedies under this warranty.

What you must provide:

Reasonable cooperation with the Brother Representative in troubleshooting as they diagnose the problem, provide access to this Product at reasonable times and provide adequate working space including heat, light, ventilation, electric current and outlets for the use of the Brother representative.

Limitations:

Brother is not responsible for damage to or loss of any equipment, media, programs or data related to the use of this Product.
Except for the repair as described above, Brother shall not be liable for any direct, indirect, incidental or consequential damages or specific relief. Because some states do not allow the exclusion or limitation of consequential or incidental damages, the above limitation may not apply to you.

THIS WARRANTY IS GIVEN IN LIEU OF ALL OTHER WARRANTIES, WRITTEN OR ORAL, WHETHER EXPRESSED BY AFFIRMATION, PROMISE, DESCRIPTION, DRAWING, MODEL OR SAMPLE. ANY AND ALL WARRANTIES OTHER THAN THIS ONE, WHETHER EXPRESS OR IMPLIED, INCLUDING IMPLIED WARRANTIES OF MERCHANTABILITY AND FITNESS FOR A PARTICULAR PURPOSE, ARE HEREBY DISCLAIMED.

- This Limited Warranty is the only warranty that Brother is giving for this Product. It is the *final expression and the exclusive and only statement* of Brother's obligations to you. It replaces all other agreements and understandings that you may have with Brother or its representatives.
- This warranty gives you certain rights and you may also have other rights that may vary from state to state.
- This Limited Warranty (and Brother's obligation to you) may not be changed in any way unless you and Brother sign the same piece of paper in which we (1) refer to this Product and your bill of sale date, (2) describe the change to this warranty and (3) agree to make that change.

© 2007 Brother International Corporation

BROTHER LASER PRINTER / MULTIFUNCTION CENTER® / FAX ON-SITE WARRANTY (Canada only)

For a limited on-site warranty of 1 year labour and parts from the date of purchase, Brother International Corporation (Canada) Ltd. ("Brother"), or its authorized on-site service providers, will repair or replace (at Brother's sole discretion) this Laser Printer/MFC/Fax machine free of charge if defective in material or workmanship. This warranty applies only to products purchased and used in Canada. This limited Warranty does not include cleaning, consumables (including, without limitation, toner cartridges and drum units, OPC belts, fixing units, print heads, paper feed rollers, transfer rolls, cleaning rollers, waste toner packs, oil bottles) or damage caused by accident, neglect, misuse or improper installation or operation or any damage caused from service, maintenance, modifications, or tampering by anyone other than a Brother Authorized Service Representative, or if shipped out of the country. The use of supplies or consumable items that are non-Brother products may void your warranty. This limited warranty ceases when this machine is rented, sold, or otherwise disposed of. Operation of the laser printer/MFC/Fax in excess of the specifications or with the Serial Number or Rating Label removed shall be deemed abuse and all repairs thereafter shall be the sole liability of the end-user/purchaser. The Laser Printer/MFC/Fax machine will be serviced on-site. Canadian Proof of Purchase in the form of a Sales Receipt must be provided if requested by the service personnel. In the event that geographical location does not permit us to provide on-site service to you, Brother reserves the right to exchange your machine with an equivalent or better one through a courier service.

When shipping or transporting your Laser Printer/MFC/Fax machine, please refer to your Operation Manual for the proper packaging procedures. Failure to remove the Toner Cartridge (and Toner Drum Unit, waste toner packs or oil bottles on applicable models) during shipping or transport will cause severe damage to the Laser Printer/MFC/Fax machine and will void the Warranty.

Improper packaging may cause severe damage to the machine during shipping and will void the warranty.

BROTHER DISCLAIMS ALL OTHER WARRANTIES EXPRESSED OR IMPLIED INCLUDING, WITHOUT LIMITATIONS, ANY IMPLIED WARRANTIES OF MERCHANTABILITY OR FOR A PARTICULAR PURPOSE, EXCEPT TO THE EXTENT THAT ANY WARRANTIES IMPLIED BY LAW CANNOT BE VALIDLY WAIVED.

No oral or written information, advice or representation provided by Brother, its Authorized Service Centres, Distributors, Dealers, Agents or employees, shall create another warranty or modify this warranty. The warranty states Brother's entire liability and your exclusive remedy against Brother for any failure of the Laser Printer/MFC/Fax machine to operate properly.

Neither Brother nor anyone else involved in the development, production, or delivery of this Laser Printer/MFC/Fax machine shall be liable for any indirect, incidental, special, consequential, exemplary, or punitive damages, including lost profits, arising from the use of or inability to use the product, even if advised by the end user/purchaser of the possibility of such damages. Since some Provinces do not allow the above limitation of liability, such limitation, may not apply to you.

This Limited Warranty gives you specific legal rights and you may also have other rights which vary from Province to Province.

Warranty Service is available at Brother Authorized Service Centres throughout Canada.
For Technical Assistance or for the name and location of your nearest Authorized Service Centre call 1-877-Brother.

Internet support: support@brother.ca or browse Brother's Web Site www.brother.ca.

Table of Contents

Section I General

1 General information 2

Using the documentation 2
Symbols and conventions used in the documentation 2
Accessing the User's Guides 2
Viewing documentation 3
Accessing Brother support (for Windows®) 5
Control panel overview 6
Data LED indications 8

2 Loading paper and documents 9

Loading paper and envelopes 9
Loading plain paper in the paper tray 9
Loading envelopes, labels, post cards or other print media in the multi-purpose tray (MP tray) 11
Acceptable paper and other media 12
Recommended paper 12
Type and size of paper 12
Handling and using special paper 14
Loading documents 18
Using the ADF (automatic document feeder) 18
Using the scanner glass 19
Unprintable area 20
Unprintable area for copies 20
Unprintable area when printing from a computer 20

3 General setup 21

Paper settings 21
Paper type 21
Paper size 21
Tray use in copy mode 22
Tray use in print mode 22
Volume settings 22
Beeper volume 22
Ecology features 23
Toner save 23
Sleep time 23
LCD contrast 23
User Settings List 23

Section II Copy

4 Making copies 26

How to copy 26
LCD display for Copy mode 26
Making a single copy 26
Making multiple copies 26
Stop copying 26
Copy options (temporary settings) 27
Enlarging or reducing the image copied 27
Using the Options key 28
Improving copy quality 29
Sorting copies using the ADF 29
Adjusting brightness, contrast and color 30
Making N in 1 copies (page layout) 31
Tray selection 32
Out of memory message 32

Section III Software

5 Software and network features 34

How to read the HTML User's Guide 34
For Windows® 34
For Macintosh® 34

Section IV Appendixes

A Safety and legal 36

Choosing a location 36
To use the machine safely 37
Important information 40
Federal Communications Commission (FCC) Declaration of Conformity (USA only) 40
Industry Canada Compliance Statement (Canada only) 41
Disconnect device 41
LAN connection 41
Laser safety 41
FDA regulations 42
Important safety instructions 42
Legal limitations for copying 44
Trademarks 45

B Option 46

Option 46
Memory board 47
Installing extra memory 47

C Troubleshooting and routine maintenance 49

Troubleshooting 49
If you are having difficulty with your machine 49
Improving the print quality 54
Error and maintenance messages 65
Document jams 69
Paper jams 70
Routine maintenance 81
Cleaning the outside of the machine 81
Cleaning the scanner 82
Cleaning the laser scanner windows 83
Cleaning the corona wires 87
Cleaning the drum unit 90
Replacing the consumable items 98
Replacing a toner cartridge 101
Replacing the drum unit 106
Replacing the belt unit 112
Replacing the waste toner box 117
Packing and shipping the machine 123
Repacking the machine 124
Machine information 130
Checking the serial number 130
Checking the page counters 130
Checking the remaining life of parts 131

D Menu and features 132

On-screen programming 132
Menu table 132
Memory storage 132
Menu keys 132
How to access the menu mode 133
Menu table 134
Entering text 140

E Specifications 142

General 142
Print media 143
Copy 144
Scan 145
Print 146
Interfaces 146
Computer requirements 147
Consumable items 148
Ethernet wired network 149

F Glossary 150

G Index 151

Section I

General

General information 2
Loading paper and documents 9
General setup 21

1 General information

Using the documentation

Thank you for buying a Brother machine! Reading the documentation will help you make the most of your machine.

Symbols and conventions used in the documentation

The following symbols and conventions are used throughout the documentation.

Bold	Bold style identifies keys on the machine control panel or computer screen.
Italics	Italicized style emphasizes an important point or refers you to a related topic.
`Courier New`	Courier New font identifies the messages shown on the LCD of the machine.

Warning icons tell you what to do to avoid the risk of injury.

Electrical Hazard icons alert you to a possible electrical shock.

Hot Surface icons warn you not to touch machine parts that are hot.

Caution icons tell you about procedures you must follow to prevent damaging the machine.

Incorrect setup icons alert you to devices and operations that are not compatible with the machine.

Note icons give useful tips.

Accessing the User's Guides

This User's Guide does not contain all the information about your machine. The advanced features of the Printer, Network and Scanner are explained in the Software and Network User's Guides that you can find on the CD-ROM.

Viewing documentation

Viewing documentation (Windows®)

To view the documentation, from the **Start** menu, point to **Brother**, **DCP-9040CN** or **DCP-9042CDN** from the program group, and then click **User's Guides in HTML format**.

If you have not installed the software, you can find the documentation by following the instructions below:

1. Turn on your PC.
   Insert the Brother CD-ROM labeled Windows® into your CD-ROM drive.

2. If the language selection screen appears, click your language.

3. If the model name screen appears, click your model name.The CD-ROM main menu will appear.

If this window does not appear, use Windows® Explorer to find and run the start.exe program from the root directory of the Brother CD-ROM.

4. Click **Documentation**.

5. Click the documentation you want to read:

   - HTML documents (3 manuals):
     HTML User's Guide for stand-alone operations, Software User's Guide and Network User's Guide.

     This format is recommended for viewing on your computer.

   - PDF documents (4 manuals):

     PDF User's Guide for stand-alone operations, Software User's Guide, Network User's Guide and Quick Setup Guide.

     This format is recommended for printing the manuals. Click to go to the Brother Solutions Center, where you can view or download the PDF documents. (Internet access and PDF Reader software are required.)

How to find scanning instructions

There are several ways you can scan documents. You can find the instructions as follows:

Software User's Guide:

- Scanning a document using the TWAIN driver in Chapter 2
- Scanning a document using the WIA driver (For Windows® XP/Windows Vista®) in Chapter 2
- Using ControlCenter3 in Chapter 3
- Network Scanning in Chapter 4

ScanSoft™ PaperPort™ 11SE with OCR How-to-Guides:

- The complete ScanSoft™ PaperPort™ 11SE with OCR How-to-Guides can be viewed from the Help selection in the ScanSoft™ PaperPort™ 11SE with OCR application.

Viewing documentation (Macintosh®)

1. Turn on your Macintosh®.
   Insert the Brother CD-ROM labeled Macintosh® into your CD-ROM drive.
2. The following window will appear.

3. Double-click the **Documentation** icon.
4. If the language selection screen appears, double-click your language.
5. Double-click the top page file to view the User's Guide, Software User's Guide and Network User's Guide in HTML format.
6. Click the documentation you want to read.
   - User's Guide
   - Software User's Guide
   - Network User's Guide

Note

The documents are also available in PDF format (4 manuals):
PDF User's Guide for stand-alone operations, Software User's Guide, Network User's Guide and Quick Setup Guide.
The PDF format is recommended for printing the manuals.

Double-click **Brother Solutions Center** icon to go to the Brother Solutions Center, where you can view or download the PDF documents. (Internet access and PDF Reader software are required.)

How to find scanning instructions

There are several ways you can scan documents. You can find the instructions as follows:

Software User's Guide:

- Scanning in Chapter 9
- Using ControlCenter2 in Chapter 10
- Network Scanning in Chapter 11

Presto!® PageManager® User's Guide:

- Instructions for scanning directly from Presto!® PageManager® The complete Presto!® PageManager® User's Guide can be viewed from the Help selection in the Presto!® PageManager® application.

Accessing Brother support (for Windows®)

You can find all the contacts you will need, such as Web support (Brother Solutions Center), Customer Service and Brother Authorized Service Centers in *Brother numbers* on page i and on the Brother CD-ROM.

- Click **Brother Support** on the main menu. The following screen will appear:

- To access our web site (http://www.brother.com/) click **Brother Home Page**.
- To view all Brother Numbers, including Customer Service numbers for the USA and Canada, click **Support Information**.
- To access the USA Brother online shopping mall (http://www.brothermall.com/)for additional product and service information, click **Brother Mall.com**.
- For the latest news and product support information (http://solutions.brother.com/), click **Brother Solutions Center**.
- To visit our web site for original/genuine Brother supplies (http://www.brother.com/original/), click **Supplies Information**.

To return to the main page, click **Back**.

Or, if you have finished, click **Exit**.

Control panel overview

DCP-9040CN and DCP-9042CDN have the same control keys.

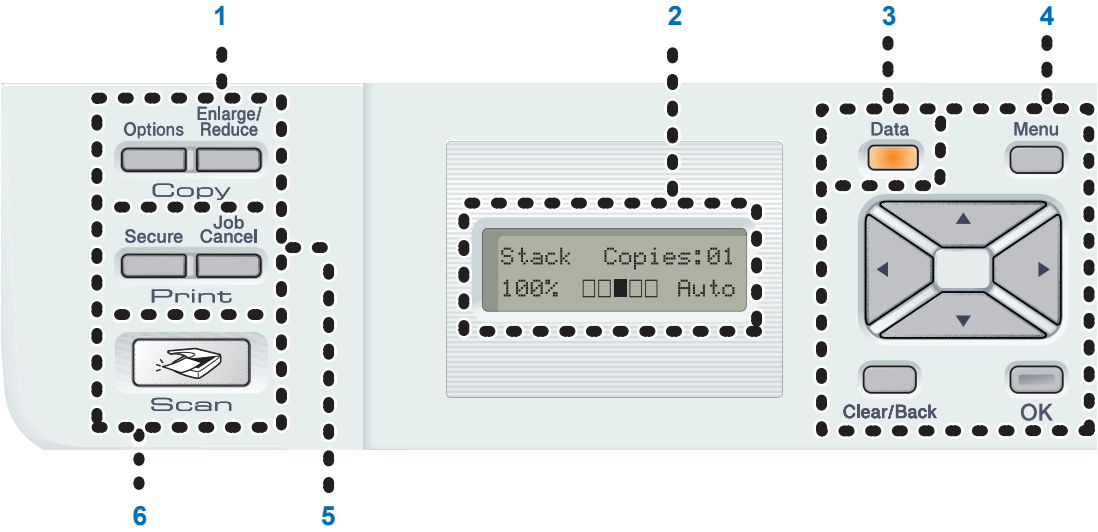

1 **Copy keys:**

Options

Lets you temporarily change multiple copy settings.

Enlarge/Reduce

Reduces or enlarges copies.

2 **LCD**

Displays messages to help you set up and use your machine.

3 **Data LED**

The LED will flash depending on the machine's status.

4 **Menu keys:**

Menu

Lets you access the Menu to program your settings in the machine.

Clear/Back

Deletes entered data or lets you cancel the current setting.

OK

Lets you store your settings in the machine.

◀ or ▶

Press to scroll backwards or forwards through menu selections.

▲ or ▼

Press to scroll through the menus and options.

5 **Print keys:**

Secure

You can print data saved in memory when you enter your four-digit password. (For details about using the **Secure** key, see the *Software User's Guide on the CD-ROM*.)

Job Cancel

Cancels a programmed print job and clears print data in machine's memory.

6 **Scan**

Puts the machine in Scan mode. (For details about scanning, see the *Software User's Guide on the CD-ROM.)*

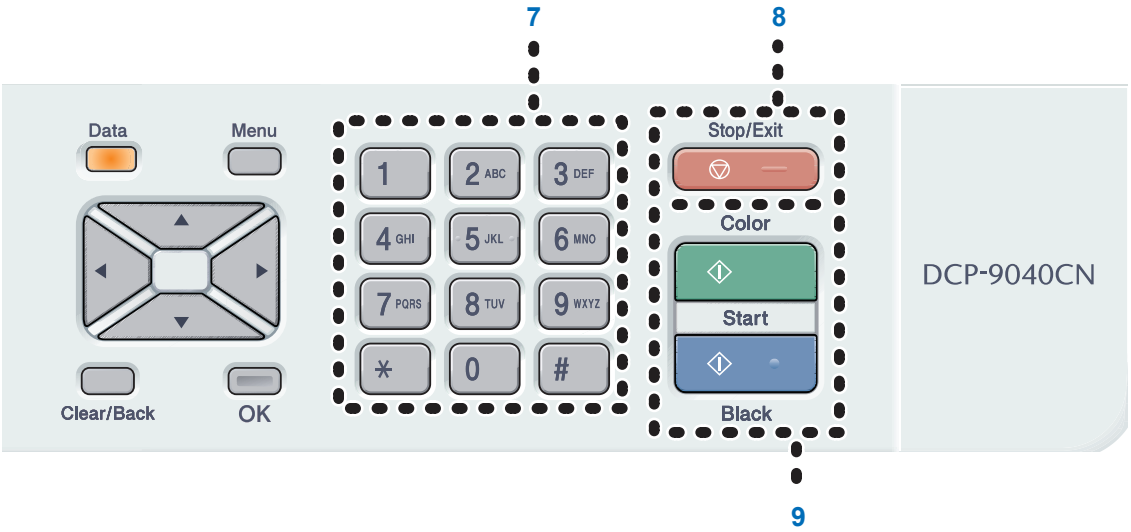

7 **Numeric keys**

Use to enter text.

8 **Stop/Exit**

Stops an operation or exits from a menu.

9 **Start:**

Color

Lets you start making copies in full color.

Black

Lets you start making copies in black & white.

Data LED indications

The **Data** LED (light emitting diode) will flash and turn on or off depending on the machine's status.

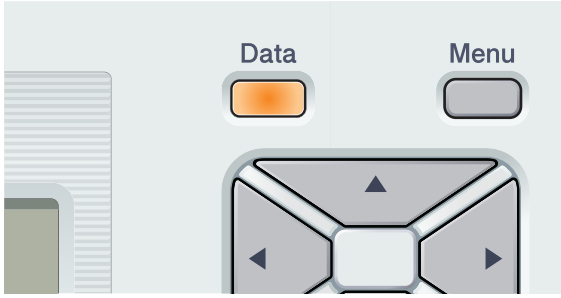

LED	LED Status	Machine Status	Description
	LED is off.	Ready Mode	The power switch is off or there is no print data in the machine.
	LED is on.	Data Remaining in Memory	Print data remains in the machine memory.
	LED is blinking.	Receiving Data	The machine is either receiving data from the computer, processing data in memory, or print data.

2 Loading paper and documents

Loading paper and envelopes

The machine can feed paper from the standard paper tray or multi-purpose tray.

When printing on plain paper 16 to 28 lb (60 to 105 g/m^2) use the paper tray.

For printing on envelopes and other types of print media use the MP tray (multi-purpose tray).

When you put paper into the paper tray, note the following:

- If your application software supports paper size selection on the print menu, you can select it through the software. If your application software does not support it, you can set the paper size in the printer driver or by using the control panel buttons.
- Before using paper that has holes in it, such as organizer sheets, you must ‘fan’ the stack to avoid paper jams and misfeeds.

Loading plain paper in the paper tray

1. Unfold the output paper tray support flap (1).

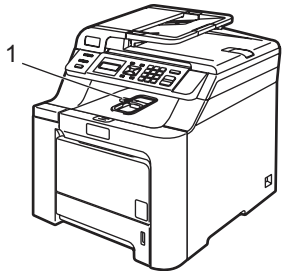

2. Pull the paper tray completely out of the machine.

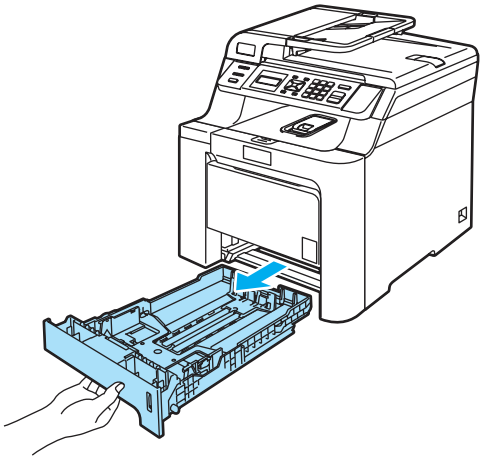

3 While pressing the green paper-guide release lever (1), slide the paper guides to fit the paper size. Make sure that the guides are firmly in the slots.

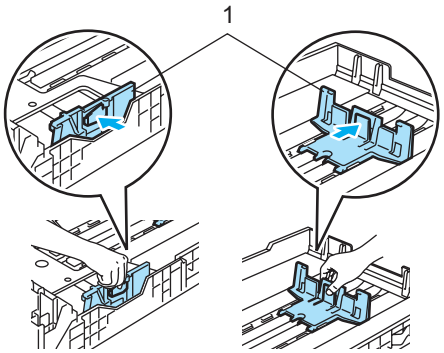

4 Fan the stack of paper well to avoid paper feeding problems.

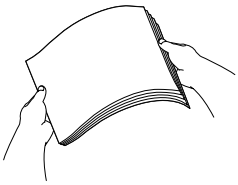

5 Put the paper into the paper tray with the top edge of the paper in first and the print side face down.
Make sure that the paper is flat in the tray and below the maximum paper mark (1).

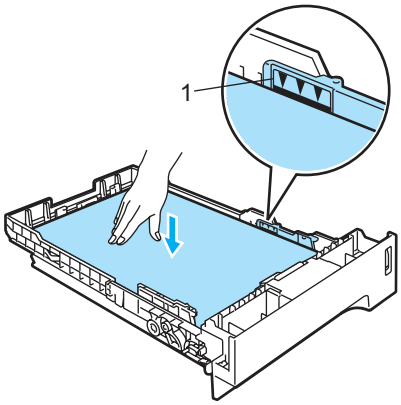

6 Push the paper tray firmly back into the machine.

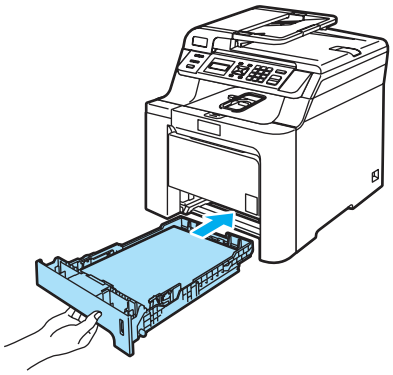

Loading envelopes, labels, post cards or other print media in the multi-purpose tray (MP tray)

You can load up to 3 envelopes or special print media in the MP tray or up to 50 sheets of plain paper. Use this tray to print or copy on thick paper, envelopes, labels or post cards.

Before loading, press the corners and sides of the envelopes to make them as flat as possible.

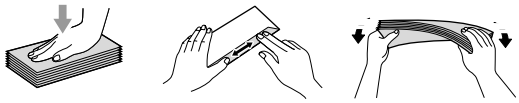

1. Unfold the output paper tray support flap (1).

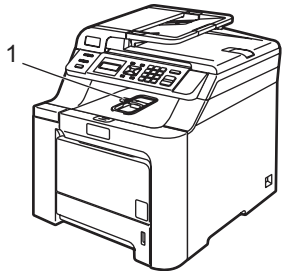

2. Open the MP tray and lower it gently.

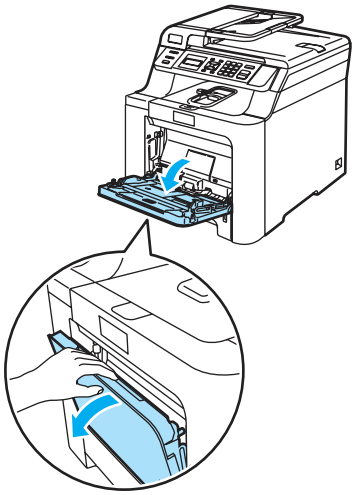

3. Pull out the MP tray support flap (1).

4. Put up to 3 envelopes, thick paper, labels or post cards in the MP tray with the top edge first and the print side face up.

Acceptable paper and other media

Recommended paper

To get the best print quality, we suggest using the following paper.

Paper Type	Item
Plain paper	Xerox 4200DP 20 lb
	Hammermill Laser Paper (24 lb=90 g/m^2)
	(Xerox Premier 80 g/m^2) (Xerox Business 80 g/m^2)
Recycled paper	(Xerox Recycled Supreme)
Labels	Avery laser label #5160 (Avery laser label L7163)
Envelopes	Columbian #138 (COM10)

Print quality may vary according to the type of paper you are using.

You can use the following types of media: plain paper, labels or envelopes.

For best results, follow the steps below:

- Use paper made for plain paper copying.
- Use paper that is 20 to 24 lb (75 to 90 g/m^2).
- Use labels which are designed for use in laser printers.
- Avoid touching the printed surface of the paper immediately after printing.
- Use long grain paper with a neutral Ph value, and a moisture content of approx 5%.

CAUTION

DO NOT load envelopes, labels or thick paper (more than 28 lb or 105 g/m^2) into the paper tray. It may cause paper jams.

Type and size of paper

The machine loads paper from the installed standard paper tray or multi-purpose tray.

Standard paper tray

Since the standard paper tray is a universal type, you can use any of the paper sizes (one paper type and size at a time) listed in the table in *Paper capacity of the paper trays* on page 13. The standard paper tray can hold up to 250 sheets of Letter/A4, legal and folio size paper (20 lb or 80 g/m^2). Paper can be loaded up to the maximum paper mark on the sliding paper width guide.

Multi-purpose tray (MP tray)

The MP tray can hold up to 50 sheets of paper (20 lb or 80 g/m^2) or up to 3 envelopes. Paper can be loaded up to the maximum paper mark on the sliding paper width guide.

The names for the paper trays in the printer driver and this Guide are as follows:

Tray	Name
Standard paper tray	Tray 1
Multi-purpose tray	MP tray

Paper capacity of the paper trays

	Paper size	Paper types	No. of sheets
Paper Tray (Tray #1)	A4, Letter, Legal, Executive, A5, A6, B5, B6 and Folio [1]	Plain paper, Thin paper and Recycled paper	up to 250 [20 lb (80 g/m^2)]
Multi-purpose tray (MP tray)	Width: 2.75 to 8.5 in. (69.9 to 215.9 mm) Length: 4.57 to 16.0 in. (116.0 to 406.4 mm)	Plain paper, Thin paper, Thick paper, Recycled paper, Bond paper, Envelope, Post card and Labels	up to 50 (plain paper) [20 lb (80 g/m^2)] up to 3 (envelopes)

[1] Folio size is 8 in. × 13 in.

Recommended paper specifications

The following paper specifications are suitable for this machine.

Basis weight (lb (g/m^2))	20-24 (75-90)
Thickness (µm)	80-110
Roughness (sec.)	Higher than 20
Stiffness (cm^3/100)	90-150
Grain direction	Long grain
Volume resistivity (ohm)	10e^9-10e^{11}
Surface resistivity (ohm-cm)	10e^9-10e^{12}
Filler	$CaCO_3$ (Neutral)
Ash content (wt%)	Below 23
Brightness (%)	Higher than 80
Opacity (%)	Higher than 85

Handling and using special paper

The machine is designed to work well with most types of xerographic and bond paper. However, some paper variables may have an effect on print quality or handling reliability. Always test samples of paper before purchasing to ensure desirable performance. Store paper in its original packaging and keep it sealed. Keep the paper flat and away from moisture, direct sunlight and heat.

Some important guidelines when selecting paper are:

- Do not use inkjet paper because it may cause a paper jam or damage your machine.
- Your supplier should be informed that the paper or envelopes will be used in a color laser machine.
- Preprinted paper must use inks that can withstand the temperature of the machine's fusing process (392 degrees Fahrenheit or 200 degrees centigrade for a period of 0.1 seconds).
- If you have selected a cotton bond paper, paper having a rough surface, such as cockle or laid finished paper or paper that is wrinkled or puckered, the paper may exhibit degraded performance.

Types of paper to avoid

CAUTION

Some types of paper may not perform well or may cause damage to your machine.

DO NOT use paper:

- that is highly textured
- that is extremely smooth or shiny
- that is curled or warped

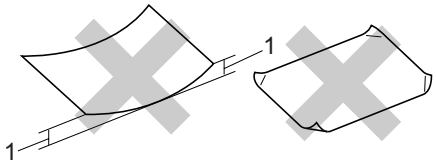

1 0.08 in. (2 mm) or greater

- that is coated or has a chemical finish
- that is damaged, creased or folded
- that exceeds the recommended weight specification in this guide
- with tabs and staples
- with letterheads using low temperature dyes or thermography
- that is multipart or carbonless
- that is designed for inkjet printing

If you use any of the types of paper listed above, they may damage your machine. This damage is not covered under any Brother warranty or service agreement.

Envelopes

Most envelopes will be suitable for your machine. However, some envelopes will have feed and print-quality problems because of the way they have been made. A suitable envelope should have edges with straight, well-creased folds and the leading edge should not be thicker than two pieces of paper. The envelope should lie flat and not be of baggy or flimsy construction. You should buy quality envelopes from a supplier who understands that you will be using the envelopes in a laser machine.

Envelopes can only be fed from the MP tray.

Before you put envelopes in the tray, check the following:

- Envelopes should have a lengthwise sealing flap.
- The sealing flaps should be folded crisply and correctly (irregularly cut or folded envelopes may cause paper jams).
- Envelopes should consist of two layers of paper in the area circled in figure below.

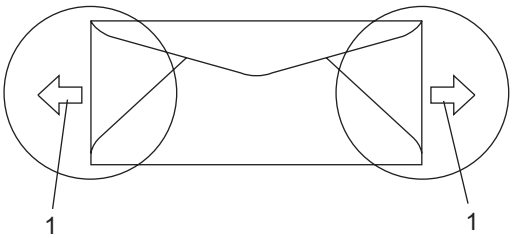

1 Feeding direction

Note

- Before you print envelopes, you must ‘fan’ the stack to avoid paper jams and misfeeds.
- Before you print a lot of envelopes, test one to make sure that the print results are what you want.
- Envelope joints that are sealed by the manufacturer should be secure.
- DO NOT put different types of paper in the paper tray at the same time because it may cause paper jams or misfeeds.
- For proper printing, you must choose the same paper or envelope size from your software application as the size of paper or envelopes you load in the tray and set in *Paper settings* on page 21.
- DO NOT print envelopes using duplex printing.
- We recommend that you do not print within 0.6 in. (15 mm) of the edges of the envelopes.
- See *Acceptable paper and other media* on page 12.

Types of envelopes to avoid

CAUTION

DO NOT use envelopes:

- that are damaged, curled, wrinkled or an unusual shape
- that are extremely shiny or textured
- with clasps, staples, snaps or tie strings
- with self-adhesive closures
- that are of a baggy construction
- that are not sharply creased
- that are embossed (have raised writing on them)
- that were previously printed by a laser machine
- that are pre-printed on the inside
- that cannot be arranged neatly when stacked
- that are made of paper that weighs more than the paper weight specifications for the machine
- with edges that are not straight or consistently square
- with windows, holes, cut-outs or perforations
- with glue on surface as shown in the figure below

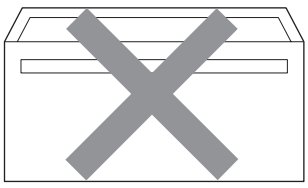

- with double flaps as shown in the figure below

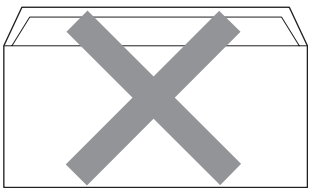

- with sealing flaps that have not been folded at purchase
- with sealing flaps as shown in the figure below

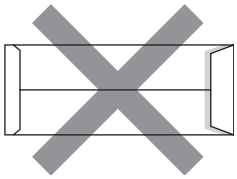

- with each side folded as shown in the figure below

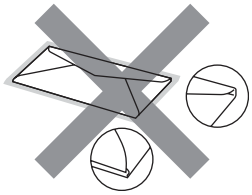

If you use any of the types of envelopes listed above, they may damage your machine. This damage is not covered under any Brother warranty or service agreement.

Occasionally you may experience paper feed problems caused by the thickness, size and flap shape of the envelopes you are using.

Labels

The machine will print on most types of labels designed for use with a laser machine. Labels should have an adhesive that is acrylic-based since this material is more stable at the high temperatures in the fuser unit. Adhesives should not come in contact with any part of the machine, because the label stock may stick to the belt unit or rollers and cause jams and print quality problems. No adhesive should be exposed between the labels. Labels should be arranged so that they cover the entire length and width of the sheet. Using labels with spaces may result in labels peeling off and causing serious jams or print problems.

All labels used in this machine must be able to withstand a temperature of 392 degrees Fahrenheit (200 degrees centigrade) for a period of 0.1 seconds.

Label sheets should not exceed the paper weight specifications described in this User's Guide. Labels exceeding this specification may not feed or print properly and may cause damage to your machine.

Labels can be fed from the MP tray only.

Types of labels to avoid

Do not use labels that are damaged, curled, wrinkled or an unusual shape.

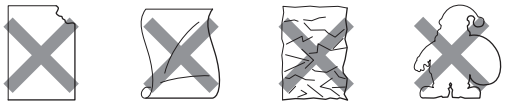

CAUTION

Avoid feeding labels with the carrier sheet exposed because your machine will be damaged.

Loading documents

You can make copies, and scan from the ADF (automatic document feeder) and from the scanner glass.

Using the ADF (automatic document feeder)

The ADF can hold up to 35 pages and feeds each sheet individually. Use standard 20 lb (80 g/m^2) paper and always fan the pages before putting them in the ADF.

Make sure documents written with ink are completely dry.

CAUTION

DO NOT leave thick documents on the scanner glass. If you do this, the ADF may jam.

DO NOT use paper that is curled, wrinkled, folded, ripped, stapled, paper-clipped, pasted or taped.

DO NOT use cardboard, newspaper or fabric.

1. Unfold the ADF document output support flap (1) and the ADF support flap (2).

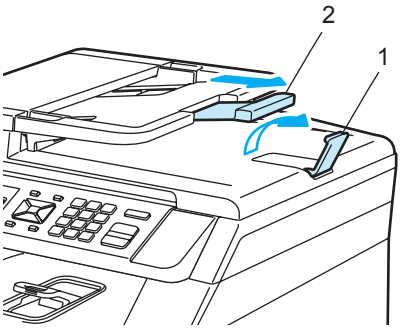

2. Fan the pages well.

3. Place your document, face up top edge first, in the ADF until you feel it touch the feed roller. The LCD will show `ADF Ready`.

4. Adjust the paper guides to fit the width of your document.

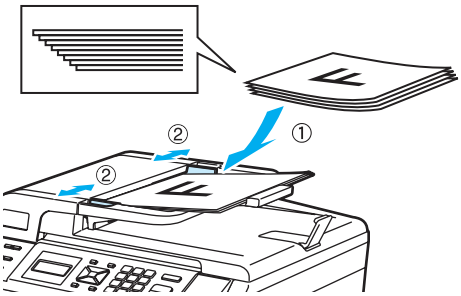

CAUTION

To avoid damaging your machine while using the ADF, DO NOT pull on the document while it is feeding.

To scan non-standard documents see *Using the scanner glass* on page 19.

Using the scanner glass

You can use the scanner glass to scan or copy the pages of a book or one page at a time. Documents can be up to 8.5 inches wide and up to 11.7 inches long (215.9 mm wide to 297 mm long).

To use the scanner glass, the ADF must be empty.

1. Lift the document cover.
2. Using the document guidelines on the left, center the document face down on the scanner glass.

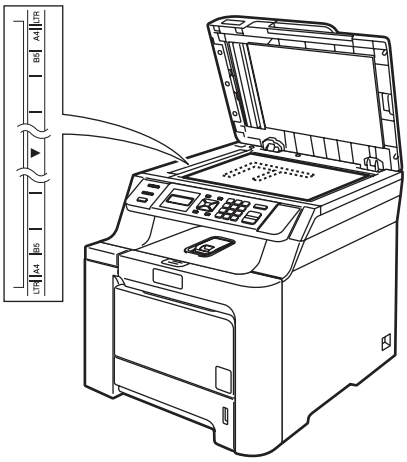

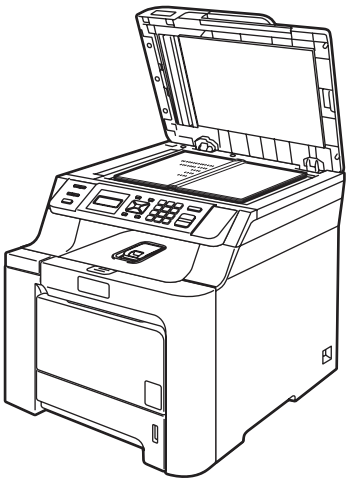

3. Close the document cover.

CAUTION

If the document is a book or is thick, DO NOT slam the cover or press on it.

Unprintable area

Unprintable area for copies

The printable area of your machine begins at approximately 0.16 in. (4 mm) from the top and bottom and 0.12 in. (3 mm) from both sides of the paper.

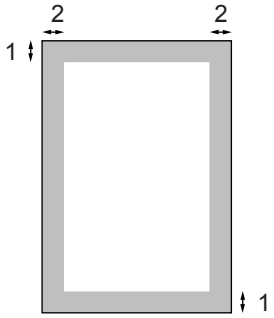

1 0.16 in. (4 mm)

2 0.12 in. (3 mm)

Note

This unprintable area shown above is for a single copy or a 1 in 1 copy using Letter size paper. The unprintable area changes with the paper size.

Unprintable area when printing from a computer

When using the default driver the printable area is smaller than the paper size, as shown below.

Portrait

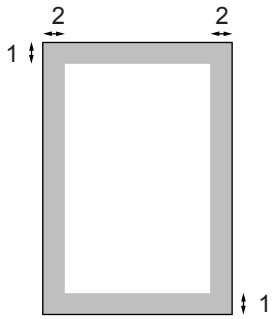

1 0.16 in. (4.23 mm)

2 0.16 in. (4.23 mm)

Landscape

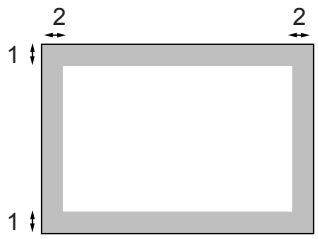

1 0.16 in. (4.23 mm)

2 0.16 in. (4.23 mm)

Note

The unprintable area shown above is for Letter size paper. The unprintable area changes with the paper size.

3 General setup

Paper settings

Paper type

Set up the machine for the type of paper you are using. This will give you the best print quality.

1. Do one of the following:
   - To set the paper type for the `MP Tray` press **Menu**, **1**, **1**, **1**.
   - To set the paper type for `Tray#1` press **Menu**, **1**, **1**, **2**.

```
Paper Type
1.MP Tray
```

2. Press ▲ or ▼ to choose `Thin`, `Plain` or `Recycled Paper` for `Tray#1`. Choose `Thin`, `Plain`, `Thick`, `Thicker` or `Recycled Paper` for `MP Tray`.
   Press **OK**.
3. Press **Stop/Exit**.

Paper size

You can use nine sizes of paper for copying: Letter, Legal, Executive, A4, A5, A6, B5, B6 and Folio.

When you change the size of paper in the tray, you will also need to change the setting for paper size at the same time so your machine can fit the document on the page.

1. Do one of the following:
   - To set the paper size for the `MP Tray` press **Menu**, **1**, **2**, **1**.
   - To set the paper size for `Tray#1` press **Menu**, **1**, **2**, **2**.

```
Paper Size
1.MP Tray
```

2. Press ▲ or ▼ to choose `A4`, `Letter`, `Legal`, `Executive`, `A5`, `A6`, `B5`, `B6`, `Folio` or `Any`.
   Press **OK**.
3. Press **Stop/Exit**.

Note

- `Any` (size) appears only when you choose the MP tray (**Menu**, **1**, **2**, **1**).
- If you choose `Any` for the MP Tray Paper Size: You must choose `MP Only` for the Tray Use setting.
- You cannot use the `Any` Paper Size selection for the MP tray when making N in 1 copies. You must choose one of the other available Paper Size selections for the MP tray.

Tray use in copy mode

You can change the priority tray that the machine will use for printing copies.

When you choose `Tray#1 Only` or `MP Only`, the machine pulls the paper only from that tray. If the selected tray is out of paper, `No Paper` will appear on the LCD. Insert the paper in the empty tray.

To change the tray setting follow the instructions below:

1. Press **Menu**, **1**, **5**, **1**.

```
Tray Use
1.Copy
```

2. Press ▲ or ▼ to choose `Tray#1 Only`, `MP Only`, `MP>T1` or `T1>MP`.
   Press **OK**.
3. Press **Stop/Exit**.

Note

- When loading the documents in the ADF and `MP>T1` or `T1>MP` is selected, the machine looks for the tray with the most suitable paper and pulls paper from that tray. If no tray has suitable paper, the machine pulls paper from the higher priority tray.
- When using the scanner glass, your document is copied from the higher priority tray even if more suitable paper is in another paper tray.

Tray use in print mode

You can change the default tray the machine will use for printing from your computer.

1. Press **Menu**, **1**, **5**, **2**.

```
Tray Use
2.Print
```

2. Press ▲ or ▼ to choose `Tray#1 Only`, `MP Only`, `MP>T1` or `T1>MP`.
   Press **OK**.
3. Press **Stop/Exit**.

Note

- The setting in the printer driver will take priority over the setting made on the control panel.
- If the control panel is set to `Tray#1 Only` or `MP Only` and you choose **Auto Select** in the printer driver, the machine pulls the paper from that tray.

Volume settings

Beeper volume

When the beeper is on, the machine will beep when you press a key or make a mistake. You can choose a range of volume levels, from `High` to `Off`.

1. Press **Menu**, **1**, **3**.

```
General Setup
3.Beeper
```

2. Press ▲ or ▼ to choose `Off`, `Low`, `Med` or `High`.
   Press **OK**.
3. Press **Stop/Exit**.

Ecology features

Toner save

You can save toner using this feature. When you set toner save to `On`, print appears lighter. The default setting is `Off`.

1. Press **Menu**, **1**, **4**, **1**.

```
Ecology
1.Toner Save
```

2. Press ▲ or ▼ to choose `On` (or `Off`).
   Press **OK**.
3. Press **Stop/Exit**.

Note

We do not recommend Toner Save for printing Photo or Gray Scale images.

Sleep time

Setting the sleep time reduces power consumption by turning off the fuser while the machine is idle.

You can choose how long the machine must be idle (from 000 to 240 minutes) before it goes into sleep mode. When the machine receives computer data or makes a copy, the timer will be reset. The default setting is 005 minutes.

While the machine is in sleep mode the LCD will display `Sleep`. When printing or copying in sleep mode, there will be a short delay while the fuser warms up.

1. Press **Menu 1**, **4**, **2**.

```
Ecology
2.Sleep Time
```

2. Enter the length of time the machine is idle before entering sleep mode (000 to 240).
   Press **OK**.
3. Press **Stop/Exit**.

LCD contrast

You can change the contrast to make the LCD look lighter or darker.

1. Press **Menu**, **1**, **6**.

```
General Setup
6.LCD Contrast
```

2. Press ▲ to make the LCD darker. Or, press ▼ to make the LCD lighter.
   Press **OK**.
3. Press **Stop/Exit**.

User Settings List

You can print a list of the settings you programmed including the network configuration.

1. Press **Menu**, **5**, **3**.

```
Machine Info.
3.User Settings
```

2. Press **Black Start** or **Color Start**.
3. Press **Stop/Exit**.

Section II

Copy

Making copies 26

4 Making copies

How to copy

LCD display for Copy mode

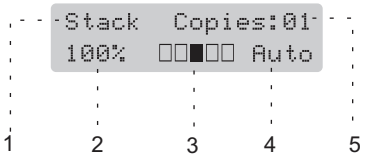

1 **Stack/Sort**
2 **Copy ratio and Copy layout**
3 **Contrast**
4 **Quality**
5 **Number of copies**

Making a single copy

1. Load your document.
2. Press **Black Start** or **Color Start**.

Making multiple copies

1. Load your document.
2. Use the numeric keys to enter the number of copies (up to 99).
3. Press **Black Start** or **Color Start**.

Note

(To sort your copies, see *Sorting copies using the ADF* on page 29.)

If the LCD shows "`Please wait`" and the machine stops copying while you are making multiple copies, please wait for 30 to 40 seconds until the machine finishes the color registration and cleaning process of the belt unit.

Stop copying

To stop copying, press **Stop/Exit**.

Copy options (temporary settings)

When you want to quickly change the copy settings temporarily for the next copy, use the temporary **Copy** keys. You can use different combinations.

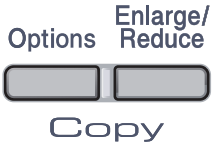

The machine returns to its default settings one minute after copying.

Enlarging or reducing the image copied

You can choose the following enlargement or reduction ratios:

Press	
	100%*
	104% EXE→LTR
	141% A5→A4
	200%
	Custom(25-400%)
	50%
	70% A4→A5
	78% LGL→LTR
	83% LGL→A4
	85% LTR→EXE
	91% Full Page
	94% A4→LTR
	97% LTR→A4

`Custom(25-400%)` allows you to enter a ratio from `25%` to `400%`.

To enlarge or reduce the next copy follow the instructions below:

1. Load your document.
2. Use the numeric keys to enter the number of copies (up to 99).
3. Press **Enlarge/Reduce**.
4. Do one of the following:
   - Press ▲ or ▼ to choose the enlargement or reduction ratio you want.

     Press **OK**.
   - Press ▲ or ▼ to choose `Custom(25-400%)`.

     Press **OK**.

     Use the numeric keys to enter an enlargement or reduction ratio from `25%` to `400%`. (For example, press **5 3** to enter `53%`.)

     Press **OK**.
5. Press **Black Start** or **Color Start**.

Note

Page Layout Options 2 in 1(P), 2 in 1(L), 4 in 1(P) or 4 in 1(L) are *not* available with Enlarge/Reduce.

Using the Options key

Use the **Options** key to quickly set the following copy settings temporarily for the next copy.

Press	Menu selections	Options	Page
Options 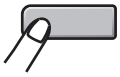	Press ▲ or ▼, then Press **OK** 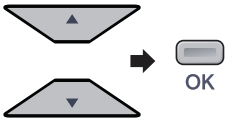	Press ▲ or ▼, then Press **OK** 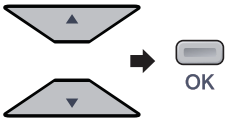	
	Quality	**Auto*** Text Photo	29
	Stack/Sort (appears when the document is in the ADF)	**Stack*** Sort	29
	Brightness	▼ -□□■□□+ ▲* ▼ -□□□■□+ ▲ ▼ -□□□□■+ ▲ ▼ -■□□□□+ ▲ ▼ -□■□□□+ ▲	30
	Contrast	▼ -□□■□□+ ▲* ▼ -□□□■□+ ▲ ▼ -□□□□■+ ▲ ▼ -■□□□□+ ▲ ▼ -□■□□□+ ▲	30
	Page Layout	**Off(1 in 1)*** 2 in 1 (P) 2 in 1 (L) 4 in 1 (P) 4 in 1 (L)	31
	Tray Select	**MP>T1*** T1>MP #1(XXX) [1] MP(XXX) [1] [1] "XXX" is the paper size.	32

Improving copy quality

You can choose from a range of quality settings. The default setting is `Auto`.

- `Auto`

  Auto is the recommended mode for ordinary printouts. Suitable for documents that contain both text and photographs.

- `Text`

  Suitable for documents containing only text.

- `Photo`

  Suitable for copying photographs.

To *temporarily* change the quality setting, follow the steps below:

1. Load your document.
2. Use the numeric keys to enter the number of copies (up to 99).
3. Press **Options**. Press ▲ or ▼ to choose `Quality`.
   Press **OK**.
4. Press ▲ or ▼ to choose `Auto`, `Text` or `Photo`.
   Press **OK**.
5. Press **Black Start** or **Color Start**.

To change the *default* setting, follow the steps below:

1. Press **Menu**, **2**, **1**.

   ```
   Copy
   1.Quality
   ```

2. Press ▲ or ▼ to choose the copy quality.
   Press **OK**.
3. Press **Stop/Exit**.

Sorting copies using the ADF

You can sort multiple copies. Pages will be stacked in the order 1 2 3, 1 2 3, 1 2 3, and so on.

1. Load your document in the ADF.
2. Use the numeric keys to enter the number of copies (up to 99).
3. Press **Options**. Press ▲ or ▼ to choose `Stack/Sort`.
   Press **OK**.
4. Press ▲ or ▼ to choose `Sort`.
   Press **OK**.
5. Press **Black Start** or **Color Start**.

Adjusting brightness, contrast and color

Brightness

Adjust the copy brightness to make copies darker or lighter.

To *temporarily* change the copy brightness setting, follow the steps below:

1. Load your document.
2. Use the numeric keys to enter the number of copies (up to 99).
3. Press **Options**.
   Press ▲ or ▼ to choose `Brightness`.
   Press **OK**.
4. Press ▲ to make a lighter copy or press ▼ to make a darker copy.
   Press **OK**.
5. Press **Black Start** or **Color Start**.

To change the *default* setting follow the steps below:

1. Press **Menu**, **2**, **2**.

   ```
   Copy
   2.Brightness
   ```

2. Press ▲ to make a lighter copy or press ▼ to make a darker copy.
   Press **OK**.
3. Press **Stop/Exit**.

Contrast

Adjust the contrast to help an image look sharper and more vivid.

To *temporarily* change the contrast setting, follow the steps below:

1. Load your document.
2. Use the numeric keys to enter the number of copies (up to 99).
3. Press **Options**.
   Press ▲ or ▼ to choose `Contrast`.
   Press **OK**.
4. Press ▲ or ▼ to increase or decrease the contrast.
   Press **OK**.
5. Press **Black Start** or **Color Start**.

To change the *default* setting follow the steps below:

1. Press **Menu**, **2**, **3**.

   ```
   Copy
   3.Contrast
   ```

2. Press ▲ or ▼ to increase or decrease the contrast.
   Press **OK**.
3. Press **Stop/Exit**.

Color saturation

You can change the default setting for color saturation.

To change the *default* setting follow the steps below:

1. Press **Menu**, **2**, **4**.

   ```
   Copy
   4.Color Adjust
   ```

2. Press ▲ or ▼ to choose `1.Red`, `2.Green` or `3.Blue`.
   Press **OK**.
3. Press ▲ or ▼ to increase or decrease the color saturation.
   Press **OK**.
4. Return to ❷ to choose the next color. Or press **Stop/Exit**.

Making N in 1 copies (page layout)

You can reduce the amount of paper used when copying by using the N in 1 copy feature. This allows you to copy two or four pages onto one page, which lets you save paper.

Important

- Please make sure the paper size is set to `Letter`, `A4`, `Legal` or `Folio`.
- (`P`) means Portrait and (`L`) means Landscape.
- You cannot use the Enlarge/Reduce setting with the N in 1 feature.

1. Load your document.
2. Use the numeric keys to enter the number of copies (up to 99).
3. Press **Options**.
   Press ▲ or ▼ to choose `Page Layout`.
   Press **OK**.
4. Press ▲ or ▼ to choose `2 in 1 (P)`, `2 in 1 (L)`, `4 in 1 (P)`, `4 in 1 (L)` or `Off(1 in 1)`.
   Press **OK**.
5. Press **Black Start** or **Color Start** to scan the page.
   If you placed the document in the ADF, the machine scans the pages and starts printing.
   If you are using the scanner glass, go to ❻.
6. After the machine scans the page, press **1** to scan the next page.

```
Next Page?
1.Yes 2.No
```

7. Place the next page on the scanner glass.
   Press **OK**.
   Repeat ❻ and ❼ for each page of the layout.
8. After all the pages have been scanned, press **2** in ❻ to finish.

If you are copying from the ADF:

Insert your document face up in the direction shown below:

■ **2 in 1 (P)**

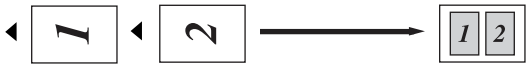

■ **2 in 1 (L)**

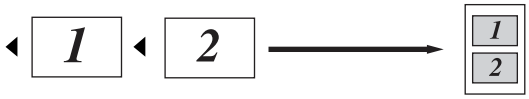

■ **4 in 1 (P)**

■ **4 in 1 (L)**

If you are copying from the scanner glass:

Insert your document face down in the direction shown below:

■ **2 in 1 (P)**

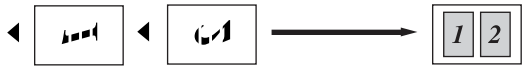

■ **2 in 1 (L)**

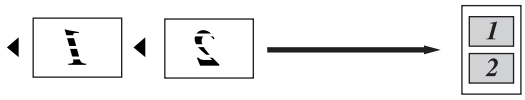

■ **4 in 1 (P)**

■ **4 in 1 (L)**

Tray selection

You can change the tray use only for the next copy.

1. Load your document.
2. Use the numeric keys to enter the number of copies (up to 99).
3. Press **Options**.
   Press ▲ or ▼ to choose `Tray Select`.
   Press **OK**.
4. Press ▲ or ▼ to choose `MP>T1`, `T1>MP`, `#1(XXX)` [1] and `MP(XXX)` [1].
   Press **OK**.
5. Press **Black Start** or **Color Start**.

Choose `Tray Select`	`MP>T1`
	`T1>MP`
	`#1(XXX)` [1]
	`MP(XXX)` [1]

[1] XXX is the paper size you set in **Menu**, **1**, **2**.

Note

To change the default setting for Tray Select, see *Tray use in copy mode* on page 22.

Out of memory message

If the memory becomes full while you are making copies, the LCD message will guide you through the next step.

If you get an `Out of Memory` message while scanning a subsequent page, you will have the option to press **Black Start** or **Color Start** to copy the pages scanned so far, or to press **Stop/Exit** to cancel the operation.

If you run out of memory, you can add it. See *Memory board* on page 47.

Section III

Software

Software and network features 34

5 Software and network features

The User's Guide on the CD-ROM includes the Software User's Guide and Network User's Guide for features available when connected to a computer (for example, printing and scanning). These guides have easy to use links that, when clicked, will take you directly to a particular section.

You can find information on these features:

- Printing
- Scanning
- ControlCenter3 (for Windows®)
- ControlCenter2 (for Macintosh®)
- Network Printing
- Network Scanning

Note

See *Accessing the User's Guides* on page 2.

How to read the HTML User's Guide

This is a quick reference for using the HTML User's Guide.

For Windows®

Note

If you have not installed the software, see *Viewing documentation (Windows®)* on page 3.

1. From the **Start** menu, point to **Brother**, **DCP-9040CN** or **DCP-9042CDN** from the programs group, then click **User's Guides in HTML format**.
2. Click on the manual you want (**SOFTWARE USER'S GUIDE, NETWORK USER'S GUIDE** or **USER'S GUIDE**) from the top menu.

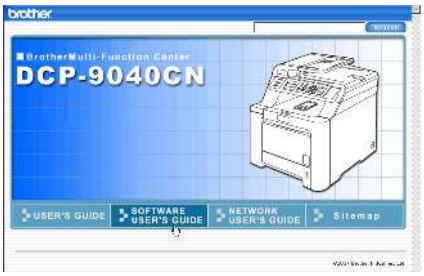

3. Click the heading you would like to view from the list at the left of the window.

For Macintosh®

1. Make sure your Macintosh® is turned on. Insert the Brother CD-ROM into your CD-ROM drive.
2. Double-click the **Documentation** icon.
3. Double-click your language folder, and then double-click the top page file.
4. Click on the manual you want (**SOFTWARE USER'S GUIDE, NETWORK USER'S GUIDE** or **USER'S GUIDE**) in the top menu, and then click the heading you would like to read from the list at the left of the window.

Section IV

Appendixes

Safety and legal	36
Option	46
Troubleshooting and routine maintenance	49
Menu and features	132
Specifications	142
Glossary	150

A Safety and legal

Choosing a location

Place your machine on a flat, stable surface that is free of vibration and shocks. Put the machine near a standard, grounded AC power outlet. Choose a location where the temperature remains between 50° F and 90.5° F (10° C and 32.5° C) and the humidity is between 20% to 80% (without condensation).

CAUTION

Avoid placing your machine in a high-traffic area.

DO NOT place the machine near heaters, air conditioners, refrigerators, water, chemicals or devices that contain magnets or generate magnetic fields.

DO NOT expose the machine to direct sunlight, excessive heat, open flames, salty or corrosive gasses, moisture, or dust.

DO NOT connect your machine to an AC power outlet controlled by wall switches or automatic timers.

Disruption of power can wipe out information in the machine’s memory.

DO NOT connect your machine to an AC power outlet on the same circuit as large appliances or other equipment that might disrupt the power supply.

DO NOT put objects on top of the machine.

To use the machine safely

Please keep these instructions for later reference and read them before attempting any maintenance.

WARNING

There are high voltage electrodes inside the machine. Before you clean the inside of the machine, make sure you have unplugged the power cord from the AC power outlet.

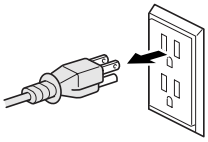

DO NOT use flammable substances, any type of spray, or an organic solvent/liquid that contains alcohol or ammonia to clean the inside or outside of the machine.
Refer to *Routine maintenance* on page 81 for how to clean the machine.

DO NOT handle the plug with wet hands. Doing this might cause an electrical shock.

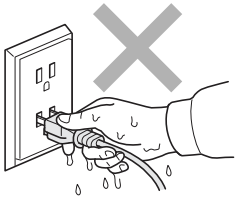

Always make sure the plug is fully inserted.

After you have just used the machine, some internal parts of the machine will be extremely hot. When you open the front or back cover of the machine, DO NOT touch the shaded parts shown in the illustration.

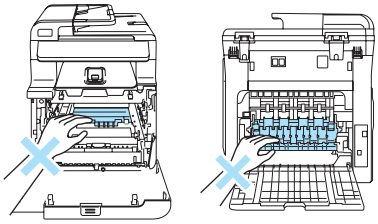

The fuser unit is marked with a caution label. Please DO NOT remove or damage the label.

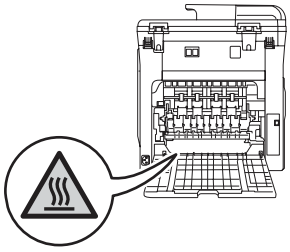

A

To prevent injuries, be careful not to put your hands on the edge of the machine under the document cover as shown in the illustration.

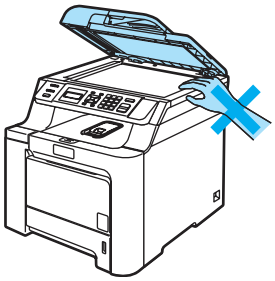

To prevent injuries, be careful not to put your fingers in the area shown in the illustrations.

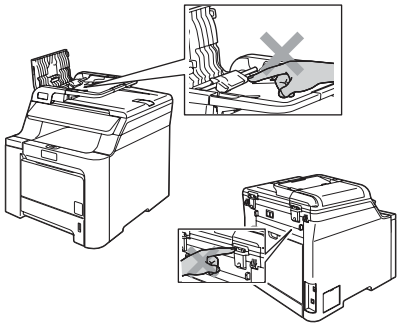

DO NOT use a vacuum cleaner to clean up scattered toner. Doing this might cause the toner dust to ignite inside the vacuum cleaner, potentially starting a fire. Please carefully clean the toner dust with a dry, lint-free cloth and dispose of it according to local regulations.

When you move the machine, grasp the side hand holds that are located at the bottom of the machine. DO NOT carry the machine by holding scanner unit.

To prevent injuries when moving or lifting this machine, make sure to use at least two people.

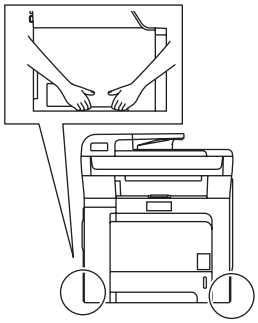

This product must be installed near an AC power outlet that is easily accessible. In case of an emergency, you must disconnect the power cord from the AC power outlet to shut off the power completely.

CAUTION

Lightning and power surges can damage this product! We recommend that you use a quality surge protection device on the AC power line or unplug the cords during a lightning storm.

WARNING

IMPORTANT SAFETY INSTRUCTIONS

When using your equipment, basic safety precautions should always be followed to reduce the risk of fire, electric shock and injury to people, including the following:

1 DO NOT use this product near water, for example, near a bath tub, wash bowl, kitchen sink, washing machine, or in a wet basement or near a swimming pool.

2 Avoid using this product during an electrical storm. There may be a remote risk of electric shock from lightning.

3 DO NOT use this product to report a gas leak in the vicinity of the leak.

4 Use only the power cord provided with the machine.

SAVE THESE INSTRUCTIONS

Important information

Federal Communications Commission (FCC) Declaration of Conformity (USA only)

Responsible Party:	Brother International Corporation 100 Somerset Corporate Boulevard Bridgewater, NJ 08807-0911 USA TEL: (908) 704-1700

declares, that the products

Product Name: DCP-9040CN and DCP-9042CDN

comply with Part 15 of the FCC Rules. Operation is subject to the following two conditions: (1) This device may not cause harmful interference, and (2) this device must accept any interference received, including interference that may cause undesired operation.

This equipment has been tested and found to comply with the limits for a Class B digital device, pursuant to Part 15 of the FCC Rules. These limits are designed to provide reasonable protection against harmful interference in a residential installation. This equipment generates, uses, and can radiate radio frequency energy and, if not installed and used in accordance with the instructions, may cause harmful interference to radio communications. However, there is no guarantee that interference will not occur in a particular installation. If this equipment does cause harmful interference to radio or television reception, which can be determined by turning the equipment off and on, the user is encouraged to try to correct the interference by one or more of the following measures:

- Reorient or relocate the receiving antenna.
- Increase the separation between the equipment and receiver.
- Connect the equipment into an outlet on a circuit different from that to which the receiver is connected.
- Call the dealer or an experienced radio/TV technician for help.

Important

Changes or modifications not expressly approved by Brother Industries, Ltd. could void the user’s authority to operate the equipment.

Important—about the interface cable

A shielded interface cable should be used to ensure compliance with the limits for a Class B digital device.

Industry Canada Compliance Statement (Canada only)

This Class B digital apparatus complies with Canadian ICES–003.

Cet appareil numérique de la classe B est conforme à la norme NMB–003 du Canada.

Disconnect device

This product must be installed near an electrical jack that is easily accessible. In case of emergencies, you must disconnect the power cord from the electrical jack to shut off power completely.

LAN connection

CAUTION

DO NOT connect this product to a LAN connection that is subject to over-voltages.

Laser safety

This equipment is certified as a Class 1 laser product as defined in IEC 60825-1+A2: 2001 specifications under the U.S. Department of Health and Human Services (DHHS) Radiation Performance Standard according to the Radiation Control for Health and Safety Act of 1968. This means that the equipment does not produce hazardous laser radiation.

Since radiation emitted inside the equipment is completely confined within protective housings and external covers, the laser beam cannot escape from the machine during any phase of user operation.

FDA regulations

U.S. Food and Drug Administration (FDA) has implemented regulations for laser products manufactured on and after August 2, 1976. Compliance is mandatory for products marketed in the United States. The following label on the back of the machine indicates compliance with the FDA regulations and must be attached to laser products marketed in the United States.

Manufactured:

BROTHER TECHNOLOGY (SHENZHEN) LTD.

NO6 Gold Garden Ind., Nanling Buji, Longgang, Shenzhen, China.

This product complies with FDA performance standards for laser products except for deviations pursuant to Laser Notice No. 50, dated July 26, 2001.

WARNING

Use of controls, adjustments or performance of procedures other than those specified in this manual may result in hazardous invisible radiation exposure.

Internal laser radiation

Max. Radiation Power: 30 mW

Wave Length: 780 – 800 nm

Laser Class: Class 3B

Important safety instructions

1 Read all of these instructions.

2 Save them for later reference.

3 Follow all warnings and instructions marked on the product.

4 Unplug this product from the wall outlet before cleaning the inside of the machine. DO NOT use liquid or aerosol cleaners. Use a dry cloth for cleaning.

5 DO NOT place this product on an unstable cart, stand, or table. The product may fall, causing serious damage to the product.

6 Slots and openings in the cabinet at the back or bottom are provided for ventilation. To ensure reliable operation of the product and to protect it from overheating, these openings must not be blocked or covered. The openings should never be blocked by placing the product on a bed, sofa, rug, or other similar surface. This product should never be placed near or over a radiator or heater. This product should never be placed in a built-in installation unless proper ventilation is provided.

7 This product should be connected to an AC power source within the range indicated on the rating label. DO NOT connect it to a DC power source. If you are not sure, contact a qualified electrician.

8 This product is equipped with a 3-wire grounded plug. This plug will only fit into a grounded power outlet. This is a safety feature. If you are unable to insert the plug into the outlet, call your electrician to replace your obsolete outlet. DO NOT defeat the purpose of the grounded plug.

9 Use only the power cord supplied with this machine.

10 DO NOT allow anything to rest on the power cord. DO NOT place this product where people can walk on the cord.

11 If an extension cord is used with this product, make sure that the total ampere ratings on the products plugged into the extension cord do not exceed the extension cord ampere rating. Also, make sure that the total of all products plugged into the AC power outlet does not exceed 15 amperes (US only).

12 DO NOT place anything in front of the machine that will block printed pages.

13 Wait until pages have exited the machine before picking them up.

14 Never push objects of any kind into this product through cabinet slots, since they may touch dangerous voltage points or short out parts resulting in the risk of fire or electric shock. Never spill liquid of any kind on the product. DO NOT attempt to service this product yourself because opening or removing covers may expose you to dangerous voltage points and other risks and may void your warranty. Refer all servicing to a Brother Authorized Service Center. For the location of your nearest Brother Authorized Service Center, please call
In USA: 1-877-BROTHER (1-877-276-8437)
In Canada: 1-877-BROTHER

15 Unplug this product from the AC power outlet and refer all servicing to Brother Authorized Service Personnel under the following conditions:

- When the power cord is damaged or frayed.
- If liquid has been spilled into the product.
- If the product has been exposed to rain or water.
- If the product does not operate normally when the operating instructions are followed. Adjust only those controls that are covered by the operating instructions. Improper adjustment of other controls may result in damage and will often require extensive work by a qualified technician to restore the product to normal operation.
- If the product has been dropped or the cabinet has been damaged.
- If the product exhibits a distinct change in performance, indicating a need for service.

16 To protect your product against power surges, we recommend the use of a power protection device (Surge Protector).

17 To reduce the risk of fire, electric shock and injury to people, note the following:

- DO NOT use this product near appliances that use water, a swimming pool or in a wet basement.
- DO NOT use the machine during an electrical storm (there is the remote possibility of an electrical shock).

Legal limitations for copying

Color reproductions of certain documents are illegal and many result in either criminal or civil liability. This memorandum is intended to be a guide rather than a complete listing of every possible prohibition. In case of doubt, we suggest that you check with counsel as to any particular questionable documents.

The following documents issued by the United States/Canadian Government or any of its Agencies may not be copied:

- Money
- Bonds or other certificates of indebtedness
- Certificates of Deposit
- Internal Revenue Stamps (canceled or uncanceled)
- Selective Service or draft papers
- Passports
- United States/Canadian Postage Stamps (canceled or uncanceled)
- Food Stamps
- Immigration Papers
- Checks or drafts drawn by Governmental agencies
- Identifying badges or insignias

Copyrighted works cannot be copied. Sections of a copyrighted work can be copied for ‘fair use’. Multiple copies would indicate improper use.

Works of art should be considered the equivalent of copyrighted works.

Licenses and Certificates of Title to motor vehicles may not be copied under certain state/provincial laws.

Trademarks

The Brother logo is a registered trademark of Brother Industries, Ltd.

Brother is a registered trademark of Brother Industries, Ltd.

Multi-Function Link is a registered trademark of Brother International Corporation.

Microsoft, Windows and Windows Server are registered trademarks of Microsoft Corporation in the U.S. and other countries.

Windows Vista is either a registered trademark or trademark of Microsoft Corporation in the United States and/or other countries.

Macintosh and TrueType are registered trademarks of Apple Inc.

Linux is the registered trademark of Linus Torvalds in the U.S. and other countries.

PostScript and PostScript 3 are either registered trademarks or trademarks of Adobe Systems Incorporated.

Nuance, the Nuance logo, PaperPort and ScanSoft are trademarks or registered trademarks of Nuance Communications, Inc. or its affiliates in the United States and/or other countries.

Presto! PageManager is a registered trademark of NewSoft Technology Corporation.

Java and all Java-based trademarks and logos are trademarks or registered trademarks of Sun Microsystems, Inc. in the United States and other countries.

Each company whose software title is mentioned in this manual has a Software License Agreement specific to its proprietary programs.

All other brand and product names mentioned in this User’s Guide, the Software User’s Guide, and the Network User’s Guide are registered trademarks of their respective companies.

B Option

Option

This machine has the following optional accessory. You can increase the capabilities of the machine with this item.

DIMM memory

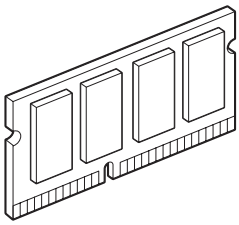

Memory board

This machine has 64 MB of standard memory and one slot for optional memory expansion. You can expand the memory up to 576 MB by installing dual in-line memory modules (SO-DIMMs). When you add the optional memory, it increases the performance for both copy and print operations.

In general, the machine uses industry-standard SO-DIMM with the following specifications:

Type: 144 pin and 64 bit output

CAS latency: 2

Clock frequency: 100 MHz or more

Capacity: 64 MB, 128 MB, 256 MB or 512 MB

Height: 1.25 in. (31.75 mm)

Dram Type: SDRAM 2 Bank

You can install the following SO-DIMM:
SDRAM SO-DIMM 144 pin

Capacity: 64 MB, 128 MB, 256 MB or 512 MB

The following web sites sell memory modules:
http://www.crucial.com/
http://www.kingston.com/
http://www.goldenram.com/
http://www.buffalo-technology.com/

Note

- There might be some SO-DIMMs that will not work with the machine.
- For more information, call Brother Customer Service.

Installing extra memory

1. Turn off the machine's power switch.
2. Disconnect the interface cable from the machine, and then unplug the power cord from the AC power outlet.
3. Remove the DIMM covers (1 and 2).

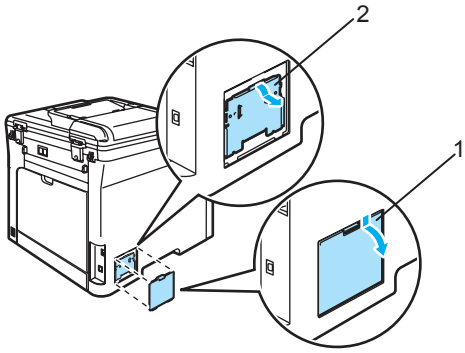

4. Unpack the DIMM and hold it by its edges.

CAUTION

To prevent damage to the machine from static electricity, DO NOT touch the memory chips or the board surface.

B

5 Hold the DIMM by the edges and align the notches in the DIMM with the protrusions in the slot. Insert the DIMM diagonally (1), then tilt it toward the interface board until it clicks into place (2).

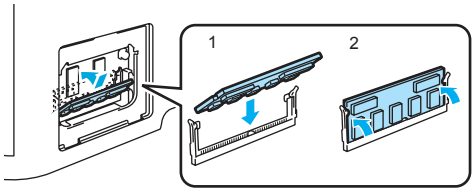

6 Put the DIMM covers (2 and 1) back on.

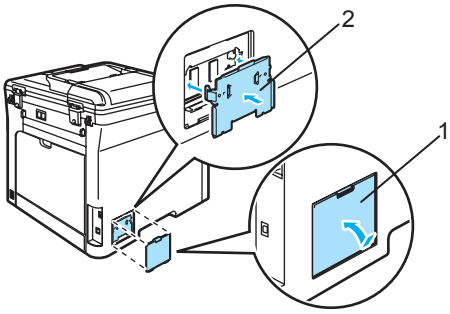

7 Plug the machine's power cord back into the AC power outlet first, and then connect the interface cable.

8 Turn on the machine's power switch.

Note

To make sure that you have installed the SO-DIMM properly, you can print the User Settings List that shows the current memory size. (See *User Settings List* on page 23.)

C Troubleshooting and routine maintenance

Troubleshooting

IMPORTANT

For technical help, you must call the country where you bought the machine. Calls must be made ***from within*** that country.

If you are having difficulty with your machine

If you think there is a problem, check the chart below and follow the troubleshooting tips. You can solve most problems by yourself.

If you need additional help, the Brother Solutions Center offers the latest FAQs and troubleshooting tips.

Visit us at http://solutions.brother.com/.

Copy quality difficulties

Difficulties	Suggestions
Vertical black lines appears in copies.	Black vertical lines on copies are typically caused by dirt or correction fluid on the glass strip, or one of the corona wires for printing is dirty. (See *Cleaning the scanner* on page 82 and *Cleaning the corona wires* on page 87.)

Printing difficulties

Difficulties	Suggestions
No printout.	■ Check that the machine is plugged in and the power switch is turned on. ■ Check that the toner cartridges and drum unit are installed properly. (See *Replacing the drum unit* on page 106.) ■ Check the interface cable connection on both the machine and your computer. (See *the Quick Setup Guide*.) ■ Check that the correct printer driver has been installed and chosen. ■ Check to see if the LCD is showing an error message. (See *Error and maintenance messages* on page 65.) ■ Check that the machine is online: (For Windows Vista®) Click the **Start** button, **Control Panel**, **Hardware and Sound**, and then **Printers**. Right-click **Brother DCP-XXXX Printer**. Make sure that **Use Printer Offline** is unchecked. (For Windows® XP and Windows Server® 2003) Click the **Start** button and select **Printers and Faxes**. Right-click **Brother DCP-XXXX Printer**. Make sure that **Use Printer Offline** is unchecked. (For Windows® 2000) Click the **Start** button and select **Settings** and then **Printers**. Right-click **Brother DCP-XXXX Printer**. Make sure that **Use Printer Offline** is unchecked.

Printing difficulties (Continued)

Difficulties	Suggestions
The machine prints unexpectedly or it prints garbage.	■ Pull out the paper tray and wait until the machine stops printing. Then turn off the machine's power switch and disconnect from the power for several minutes. ■ Check the settings in your application to make sure it is set up to work with your machine.
The machine prints the first couple of pages correctly, then some pages have text missing.	■ Check the settings in your application to make sure that it is set up to work with your machine. ■ Your computer is not recognizing the machine's input buffer's full signal. Make sure that you connected the interface cable correctly. (See *the Quick Setup Guide*.)
The headers or footers appear when the document displays on the screen but they do not show up when it is printed.	There is an unprintable area on the top and bottom of the page. Adjust the top and bottom margins in your document to allow for this.
The machine does not print on both sides of the paper even though the printer driver setting is Duplex. (DCP-9042CDN only)	Check the paper size setting in the printer driver. You need to select Letter, Legal or Folio.
The machine is not printing or has stopped printing and the machine's Data LED turns on.	Press **Job Cancel**. As the machine cancels the job and clears it from the memory it may produce an incomplete printout.

Scanning difficulties

Difficulties	Suggestions
TWAIN errors appear while scanning.	Make sure that the Brother TWAIN driver is chosen as the primary source. In PaperPort™ 11SE, click **File**, **Scan or Get Photo** and choose the **Brother TWAIN driver**.
Network scanning does not work.	See *Network difficulties* on page 51.

Software difficulties

Difficulties	Suggestions
Cannot install software or print.	Run the **Repair MFL-Pro Suite** program on the CD-ROM. This program will repair and reinstall the software.
Cannot perform '2 in 1' or '4 in 1' printing.	Check that the paper size setting in the application and in the printer driver are the same.
The machine does not print from Adobe Illustrator.	Try to reduce the print resolution. (See *Advanced tab in the Software User's Guide on the CD-ROM*.)

Paper handling difficulties

Difficulties	Suggestions
The machine does not load paper. The LCD shows `No Paper` or a Paper Jam message.	■ If there is no paper, load a new stack of paper into the paper tray. ■ If there is paper in the paper tray, make sure it is straight. If the paper is curled, you should straighten it. Sometimes it is helpful to remove the paper, turn the stack over and put it back into the paper tray. ■ Reduce the amount of paper in the paper tray, and then try again. ■ Check that the MP tray mode is not chosen in the printer driver. ■ If the LCD shows Paper Jam message and you still have a problem, see *Paper jams* on page 70.
The machine does not feed paper from the MP tray.	■ Fan the paper well and put it back in the tray firmly. ■ Make sure that MP tray mode is chosen in the printer driver.
How do I print on envelopes?	You can load envelopes from the MP tray. Your application must be set up to print the envelope size you are using. This is usually done in the Page Setup or Document Setup menu of your application. (See your application's manual for more information.)
Which paper can I use?	You can use plain paper, recycled paper, envelopes and labels that are made for laser machines. (For details, see *Acceptable paper and other media* on page 12.)
There is a paper jam.	(See *Paper jams* on page 70.)

Print quality difficulties

Difficulties	Suggestions
Printed pages are curled.	■ Low quality thin or thick paper or not printing on the recommended side of the paper could cause this problem. Try turning over the stack of paper in the paper tray. ■ Make sure that you choose the Paper Type that suits the media type you are using. (See *Acceptable paper and other media* on page 12.)
Printed pages are smeared.	The Paper Type setting may be incorrect for the type of print media you are using, or the print media may be too thick or have a rough surface. (See *Acceptable paper and other media* on page 12 and *Basic tab in the Software User's Guide on the CD-ROM*.)
Printouts are too light.	■ If this problem occurs when making copies, turn Toner Save mode to off in the machine menu settings. (See *Toner save* on page 23.) ■ Set Toner Save mode to off in the Advanced tab in the printer driver. (See *Advanced tab in the Software User's Guide on the CD-ROM*.)

Network difficulties

Difficulties	Suggestions
Cannot print over a wired Network.	Make sure your machine is powered on and is on-line and in Ready mode. Print the Network Configuration list to see your current Network settings. (See *User Settings List* on page 23.) Reconnect the LAN cable to the hub to verify that the cable and network connections are good. If possible, try connecting the machine to a different port on your hub using a different cable. If the connections are good, the upper LED of the back panel of the machine will be green.

Network difficulties (Continued)

Difficulties	Suggestions
The network scanning feature does not work. The network printing feature does not work.	(For Windows® only) The firewall setting on your PC may be rejecting the necessary network connection. Follow the instructions below to configure your firewall. If you are using a personal firewall software, see the User's Guide for your software or contact the software manufacturer. **For Windows® XP SP2 users:** 1 Click the **Start** button, **Control Panel**, **Network and Internet Connections**, and then **Windows Firewall**. Make sure that **Windows Firewall** on the **General** tab is set to On. 2 Click the **Advanced** tab and **Settings...** button of the **Network Connection Settings**. 3 Click the **Add** button. 4 To add port 54925 for network scanning, enter the information below: 1. In **Description of service**: Enter any description, for example "Brother Scanner". 2. In **Name or IP address (for example 192.168.0.12) of the computer hosting this service on your network**: Enter "Localhost". 3. In **External Port number for this service**: Enter "54925". 4. In **Internal Port number for this service**: Enter "54925". 5. Make sure **UDP** is selected. 6. Click **OK**. 5 If you still have trouble with your network connection, click the **Add** button. 6 To add port 137 for both network scanning and network printing, enter the information below: 1. In **Description of service**: Enter any description, for example "Brother network scanning" 2. In **Name or IP address (for example 192.168.0.12) of the computer hosting this service on your network**: Enter "Localhost". 3. In **External Port number for this service**: Enter "137". 4. In **Internal Port number for this service**: Enter "137". 5. Make sure **UDP** is selected. 6. Click **OK**. 7 Make sure if the new setting is added and is checked, and then click **OK**.

Network difficulties (Continued)

Difficulties	Suggestions
The network scanning feature does not work. The network printing feature does not work. (continued)	**For Windows Vista® users:** 1 Click the **Start** button, **Control Panel**, **Network and Internet**, **Windows Firewall** and click **Change settings**. 2 When the **User Account Control** screen appears, do the following. ■ Users who have administrator rights: Click **Continue**. ■ For users who do not have administrator rights: Enter the administrator password and click **OK**. 3 Make sure that **Windows Firewall** on the **General** tab is set to On. 4 Click the **Exceptions** tab. 5 Click the **Add port...** button. 6 To add port 54925, enter the information below: 1. In **Name**: Enter any description, for example “Brother Scanner”. 2. In **Port number**: Enter “54925”. 3. Make sure **UDP** is selected. Then click **OK**. 7 Make sure that the new setting is added and is checked, and then click **Apply**. 8 If you still have trouble with your network connection such as network scanning or printing, check **File and Printer Sharing** box in the **Exceptions** tab and then click **Apply**.
Your computer cannot find your machine.	**For Windows® users:** The firewall setting on your PC may be rejecting the necessary network connection. For details, see the instruction above. **For Macintosh® users:** Re-select your machine in the DeviceSelector application located in **Macintosh HD/Library/Printers/Brother/Utilities** or from the Model pop-up menu of ControlCenter2.

Other

Difficulties	Suggestions
The machine will not turn on.	Adverse conditions on the power connection (such as lightning or a power surge) may have triggered the machine’s internal safety mechanisms. Turn the machine off and unplug the power cord. Wait for ten minutes, then plug in the power cord and turn the machine on.

C

Improving the print quality

If you have a print quality problem, print a test page first (**Menu**, **3**, **2**, **3**). If the printout looks good, the problem is probably not the machine. Check the interface cable or try the machine on another computer.

Note

You can resolve a print quality problem by replacing a toner cartridge with a new one when the LCD shows the `Toner Life End` message.

Examples of poor print quality	Recommendation
White lines or bands or ribbing across the page 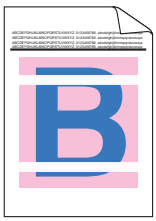	■ Make sure that the machine is on a solid level surface. ■ Make sure that the toner cartridges are installed properly. (See *Replacing a toner cartridge* on page 101.) ■ Shake the toner cartridges gently. ■ Make sure that the drum unit is installed properly. (See *Replacing the drum unit* on page 106.) ■ Make sure that you use paper that meets our specifications. A rough surfaced paper or thick print media can cause the problem. (See *Acceptable paper and other media* on page 12.) ■ Clean the laser scanner windows with a soft cloth. (See *Cleaning the laser scanner windows* on page 83.) ■ The drum unit may be damaged. Put in a new drum unit. (See *Replacing the drum unit* on page 106.)
Colors are light or unclear on the whole page. 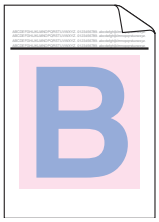	■ Make sure that the recommended paper was used. ■ Change the paper to freshly unpacked paper. ■ Make sure that the front cover is closed properly. ■ Shake the toner cartridges gently. ■ Clean the laser scanner windows with a soft cloth. (See *Cleaning the laser scanner windows* on page 83.) ■ Turn off Toner Save. (See *Toner save* on page 23.)
White streaks or bands down the page 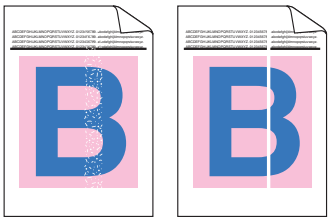	■ Shake the toner cartridges gently. ■ Clean the laser scanner windows with a soft cloth. (See *Cleaning the laser scanner windows* on page 83.)

Examples of poor print quality	Recommendation
Colored streaks or bands down the page 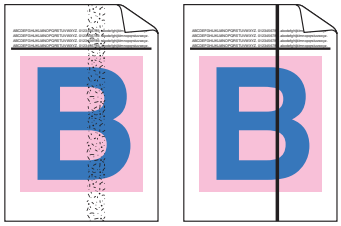	■ One of the toner cartridges may be damaged. Replace the toner cartridge that matches the color of the streak or band. (See *Replacing a toner cartridge* on page 101.) ■ Clean all four corona wires (one for each color) of the drum unit by sliding the green tab. (See *Cleaning the corona wires* on page 87.) ■ Make sure each corona wire's green tab is at the home position (▼). ■ The drum unit may be damaged. Put in a new drum unit. (See *Replacing the drum unit* on page 106.) ■ The fuser unit may have a smudge mark. Call Brother Customer Service at 1-877-BROTHER (1-877-276-8437) (**in USA**) or 1-877-BROTHER (**in Canada**).
Colored lines across the page 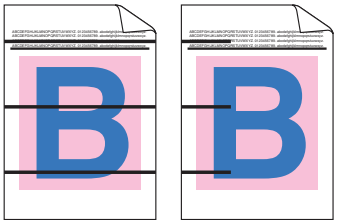	■ One of the toner cartridges may be damaged. Replace the toner cartridge that matches the color of the line. (See *Replacing a toner cartridge* on page 101.) ■ The drum unit may be damaged. Put in a new drum unit. (See *Replacing the drum unit* on page 106.) ■ Clean all four corona wires (one for each color) of the drum unit by sliding the green tab. (See *Cleaning the corona wires* on page 87.) ■ Clean the laser scanner windows with a soft cloth. (See *Cleaning the laser scanner windows* on page 83.)
White spots or hollow print	■ Make sure that you use paper that meets our specifications. (See *Acceptable paper and other media* on page 12.) ■ Make sure that the recommended paper was used. ■ Choose **Thick paper** mode in the printer driver or in the machine's Paper Type menu setting, or use thinner paper than you are currently using. (See *Paper type* on page 21 and *Basic tab in the Software User's Guide on the CD-ROM*.) ■ Change the paper to fresh, unopened paper. ■ Check the machine's environment. Conditions such as high humidity can cause hollow print. (See *Choosing a location* on page 36.) ■ Clean all four corona wires (one for each color) of the drum unit by sliding the green tab. (See *Cleaning the corona wires* on page 87.) If the print quality has not improved, put in a new drum unit. (See *Replacing the drum unit* on page 106.) ■ Clean the drum unit. (See *Cleaning the drum unit* on page 90.)
Completely blank or some colors are missing. 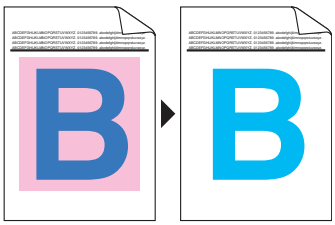	■ Make sure that the toner cartridges are installed properly. (See *Replacing a toner cartridge* on page 101.) ■ One of the toner cartridges may be damaged. Identify the missing color and put in a new toner cartridge for the color with the white line. (See *Replacing a toner cartridge* on page 101.) ■ The drum unit may be damaged. Put in a new drum unit. (See *Replacing the drum unit* on page 106.)

C

Examples of poor print quality	Recommendation
Colored or white spots at 2.95 in. intervals (75 mm) 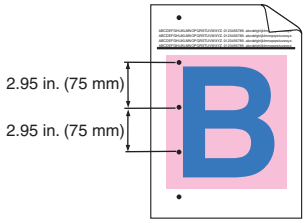 	1 Dust, paper powder, glue, and so on may stick to the surface of the photosensitive drum (OPC) and cause colored or white spots to appear on printed documents. 2 Make five copies of a blank, white sheet of paper. (See *Making multiple copies* on page 26.) 3 If you still see the spots down the printed documents at 2.95 in. (75 mm) intervals after you made five copies, clean the drum unit. (See *Cleaning the drum unit* on page 90.) 4 If the print quality still has not improved you need to install a new drum. (See *Replacing the drum unit* on page 106.)
Toner scatter or toner stain 	■ Check the machine's environment. Conditions such as high humidity and high temperatures may cause this print quality problem. (See *Choosing a location* on page 36.) ■ Make sure that you use paper that meets our specifications. Rough-surfaced paper may cause the problem. (See *Acceptable paper and other media* on page 12.) ■ Install a new toner cartridge for the color causing the problem. (See *Replacing a toner cartridge* on page 101.) ■ Clean the corona wires and the drum unit for the color causing the problem. (See *Cleaning the corona wires* on page 87 and *Cleaning the drum unit* on page 90.) If the print quality has not improved, put in a new drum unit. (See *Replacing the drum unit* on page 106.)
Gray or colored background 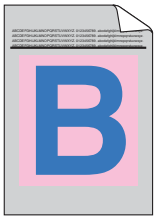	■ Make sure that you use paper that meets our specifications. (See *Acceptable paper and other media* on page 12.) ■ Check the machine's environment. Conditions such as high temperatures and high humidity can increase the amount of background shading. (See *Choosing a location* on page 36.) ■ Install a new toner cartridge for the color causing the problem. (See *Replacing a toner cartridge* on page 101.) ■ Clean the corona wires of the drum unit for the color causing the problem. (See *Cleaning the corona wires* on page 87.) If the print quality has not improved, put in a new drum unit. (See *Replacing the drum unit* on page 106.)
Page skewed 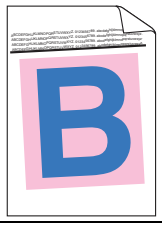	■ Make sure the paper or other print media is loaded properly in the paper tray and that the guides are not too tight or too loose against the paper stack. ■ Set the paper guides correctly. ■ The paper tray may be too full. ■ Make sure that you use paper that meets our specifications. (See *Acceptable paper and other media* on page 12.)

Examples of poor print quality	Recommendation
Ghost 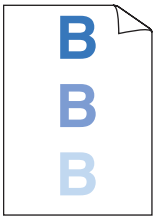	■ Make sure that you use paper that meets our specifications. Rough-surfaced paper or thick paper may cause the problem. (See *Acceptable paper and other media* on page 12.) ■ Make sure that you choose the proper media type in the printer driver or in the machine's Paper Type menu setting. (See *Acceptable paper and other media* on page 12 and *Basic tab in the Software User's Guide on the CD-ROM*.) ■ The drum unit may be damaged. Put in a new drum unit. (See *Replacing the drum unit* on page 106.)
The color of your printouts are not what you expected.	■ Make sure that the toner cartridges are installed properly. (See *Replacing a toner cartridge* on page 101.) ■ Make sure that none of the toner cartridges have reached the end of their life. ■ Make sure that the drum unit is installed properly. (See *Replacing the drum unit* on page 106.) ■ Make sure that the belt unit is installed properly. (See *Replacing the belt unit* on page 112.) ■ Perform the calibration. Press **Menu**, **3**, **5**. (See *Software User's Guide on the CD-ROM*.) ■ Adjust the color by using the custom setting in the printer driver. Colors the machine can print and colors you see on a monitor are different. The machine may not be able to reproduce the colors on your monitor. ■ Make sure that you use paper that meets our specifications. (See *Acceptable paper and other media* on page 12.) ■ The drum unit may be damaged. Put in a new drum unit. (See *Replacing the drum unit* on page 106.) ■ Put in a new belt unit. (See *Replacing the belt unit* on page 112.)
All one color	■ Clean the corona wires of the drum unit for the color causing the problem. (See *Cleaning the corona wires* on page 87.) If the print quality has not improved, put in a new drum unit. (See *Replacing the drum unit* on page 106.) ■ The drum unit may be damaged. Put in a new drum unit. (See *Replacing the drum unit* on page 106.)

Examples of poor print quality	Recommendation
Color misregistration 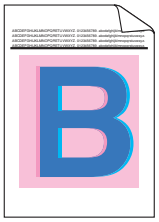	■ Make sure that the drum unit is installed properly. (See *Replacing the drum unit* on page 106.) ■ Make sure that the belt unit is installed properly. (See *Replacing the belt unit* on page 112.) ■ Make sure that the waste toner box is installed properly. (See *Replacing the waste toner box* on page 117.) ■ Perform the auto color registration by using the control panel. Press **Menu**, **3**, **6**, **1**. Or ■ Perform the manual color registration by using the control panel. 1 Print the correction chart by using the control panel. Press **Menu**, **3**, **7**, **1**. 2 Enter the correction value on the chart. Press **Menu**, **3**, **7**, **2**. If the color misregistration is not corrected after registering the color manually, take all the toner cartridges out of the drum unit and turn the drum unit over, then make sure that four drum unit gears are in the home position. The home position of each drum can be identified by matching the number on the drum unit gear to the same number on the side of the drum unit as shown in the illustration. 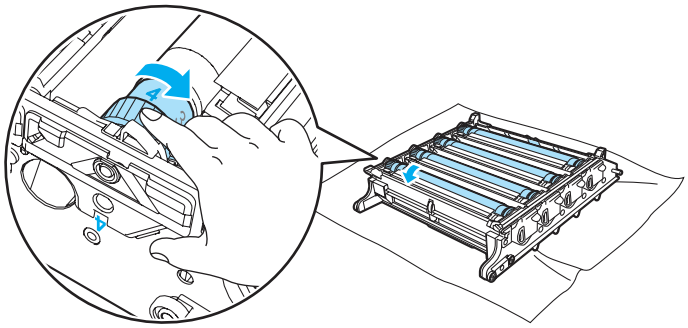 ■ The drum unit may be damaged. Put in a new drum unit. (See *Replacing the drum unit* on page 106.) ■ Put in a new belt unit. (See *Replacing the belt unit* on page 112.) ■ Put in a new waste toner box. (See *Replacing the waste toner box* on page 117.) ■ If solid area of color or images have cyan, magenta or yellow fringes, you can use the auto registration feature to correct the problem.

Examples of poor print quality	Recommendation
Uneven density appears periodically across the page	■ Identify the color that is uneven and put in a new toner cartridge for that color. (See *Replacing a toner cartridge* on page 101.) ■ The drum unit may be damaged. Put in a new drum unit. (See *Replacing the drum unit* on page 106.) ■ Make sure that the fuser unit is installed properly.
Missing image at edge	■ Make sure that the toner cartridges are installed properly. (See *Replacing a toner cartridge* on page 101.) ■ Make sure that the drum unit is installed properly. (See *Replacing the drum unit* on page 106.) ■ One of the toner cartridges may be damaged. Identify the missing color and put in a new toner cartridge for the color with the white line. (See *Replacing a toner cartridge* on page 101.) ■ The drum unit may be damaged. Put in a new drum unit. (See *Replacing the drum unit* on page 106.)
Missing image at thin line	■ If you are using a Windows® printer driver, open **Properties** window, and then click **Printing Preferences**. Choose the **Advanced** tab, **Device Options**, **Print Setting**, and then check the **Improve pattern printing** or **Improve Thin Line** boxes.
Wrinkle 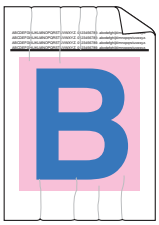	■ Change to the recommended type of paper. (See *Recommended paper* on page 12.) ■ Check the paper type and quality. (See *Acceptable paper and other media* on page 12.) ■ Make sure that the back cover is closed properly. ■ Make sure that paper is loaded properly. ■ Make sure that you choose the proper media type in the printer driver or in the machine's Paper Type menu setting. (See *Acceptable paper and other media* on page 12 and *Basic tab in the Software User's Guide on the CD-ROM*.) ■ Turn over the stack of paper in the tray or rotate the paper 180° in the input tray. ■ Make sure that the drum unit is installed properly. (See *Replacing the drum unit* on page 106.) ■ Make sure that the fuser unit is installed properly. ■ Replace the fuser unit. Call Brother Customer Service.
Insufficient gloss	■ Change to the recommended type of paper. (See *Recommended paper* on page 12.)

Examples of poor print quality	Recommendation
Offset image 	■ Check the machine's environment. Conditions such as high temperatures and high humidity can cause this problem. (See *Choosing a location* on page 36.) ■ Make sure that you use paper that meets our specifications. (See *Acceptable paper and other media* on page 12.) ■ Make sure that you choose the proper media type in the printer driver or in the machine's Paper Type menu setting. (See *Acceptable paper and other media* on page 12 and *Basic tab in the Software User's Guide on the CD-ROM*.) ■ Change to the recommended type of paper. (See *Recommended paper* on page 12.) ■ The drum unit may be damaged. Put in a new drum unit. (See *Replacing the drum unit* on page 106.)
Poor fixing 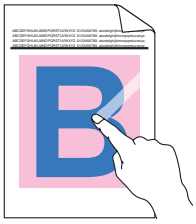	■ Make sure that you use paper that meets our specifications. (See *Acceptable paper and other media* on page 12.) ■ Make sure that you choose the proper media type in the printer driver or in the machine's Paper Type menu setting. (See *Acceptable paper and other media* on page 12 and *Basic tab in the Software User's Guide on the CD-ROM*.) ■ Make sure that the release lever of the fuser unit is in the closed position. ■ Call Brother Customer Service to replace the fuser unit.
Poor fixing when printed on thick paper	■ Choose **Thick paper** mode in the printer driver or in the machine's Paper Type menu setting. (See *Paper type* on page 21 and *Basic tab in the Software User's Guide on the CD-ROM*.) ■ Make sure that you use paper that meets our specifications. (See *Acceptable paper and other media* on page 12.)

Examples of poor print quality	Recommendation
Curled or waved 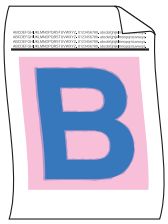	■ Make sure that you choose the proper media type in the printer driver or in the machine's Paper Type menu setting. (See *Acceptable paper and other media* on page 12 and *Basic tab in the Software User's Guide on the CD-ROM*.) ■ Check the paper type and quality. High temperatures and high humidity will cause paper to curl. ■ If you do not use the machine often, the paper may have been in the paper tray too long. Turn over the stack of paper in the paper tray. Also, fan the paper stack and then rotate the paper 180° in the paper tray. ■ Follow these steps: 1 Open the back cover. 2 Push the gray lever to the right as shown below. 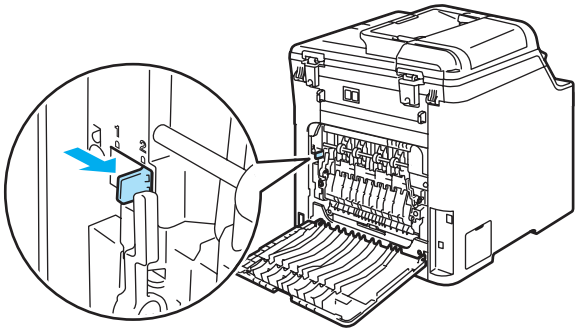 3 Close the back cover and resend the print job. **Note** When you have finished printing, open the back cover and reset the lever back to the original position.

C

Examples of poor print quality	Recommendation
Envelope creases 	1 Open the back cover. 2 Pull down the two gray levers, one on the left-hand side and one on the right-hand side to the envelope position, as shown in the illustration below. 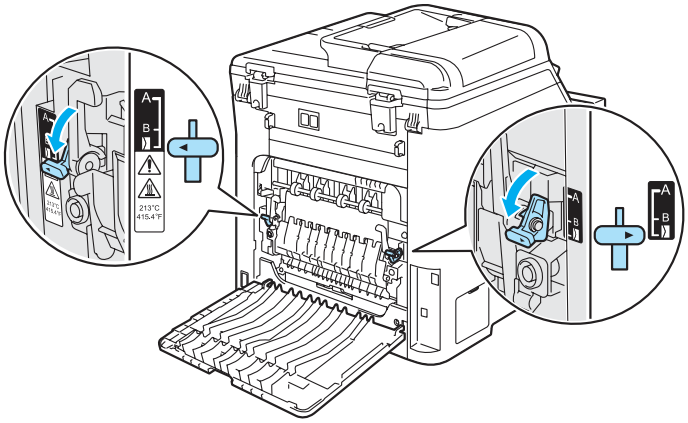 3 Close the back cover and re-send the print job. **Note** When you have finished printing, open the back cover and reset the two gray levers back to their original position.

Examples of poor print quality	Recommendation
White lines or ribbing down the page on duplex print **Note** Position B is only for duplex printing with recycled paper when the temperature and humidity are low.	■ Choose **Thin Paper** mode in the printer driver and re-send the print job. If the problem is not solved after printing a few pages, follow these steps: 1 Open the back cover. 2 Pull down the two grey levers, one on the left-hand side and one on the right-hand side, to position B as shown in the illustration below. 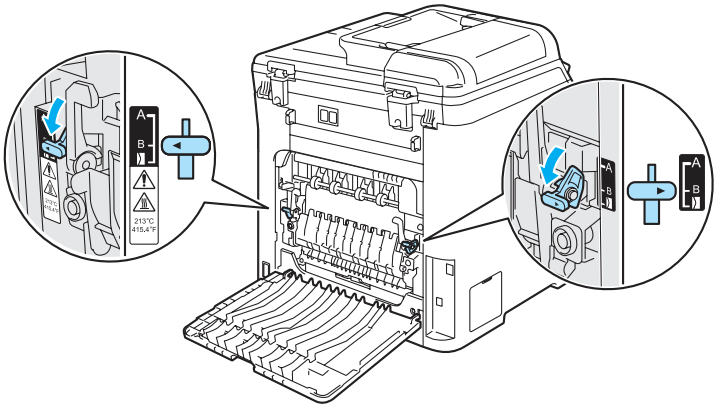 3 Close the back cover. 4 Choose **Plain Paper** mode in the printer driver and re-send the print job. 5 If the problem is not solved after printing a few pages, choose **Thin Paper** mode in the printer driver and re-send the print job. **Note** When you have finished printing, open the back cover and reset the two grey levers back to the original position. ■ Use thicker paper than you are now using.

C

Examples of poor print quality	Recommendation
Toner scatter or toner stain on the edge of duplex pages 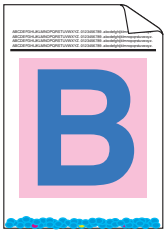	**CAUTION** We recommend that you place the drum unit and toner cartridges on a clean, flat surface with a piece of disposable paper underneath them in case you accidentally spill or scatter toner. DO NOT touch the surface of the photosensitive drum. Take all the toner cartridges out of the drum unit and turn the drum unit over. Wipe the toner on the edge of drum unit with a dry lint free soft cloth as shown in the illustration. 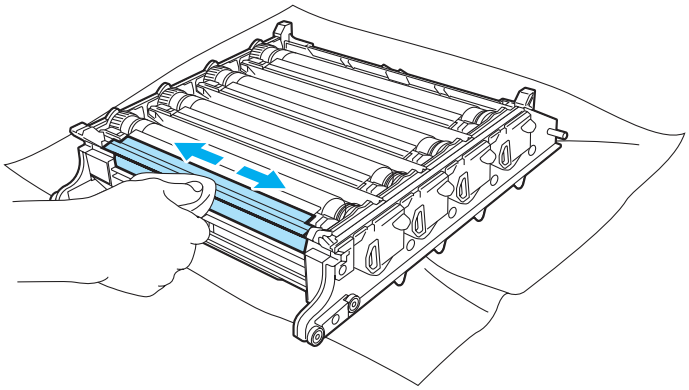

Error and maintenance messages

As with any sophisticated office product, errors may occur and consumable items may need to be replaced. If this happens, your machine identifies the error or required routine maintenance and show the appropriate message. The most common error and maintenance message are shown below.

Error Message	Cause	Action
`Calibrate`	Calibration failed.	Press **Black Start** or **Color Start** and try it again. Do one of the following: ■ Turn off the machine's power switch. Wait a few seconds, then turn it on again. ■ Put in a new drum unit. (See *Replacing the drum unit* on page 106.) ■ Put in a new belt unit. (See *Replacing the belt unit* on page 113.) ■ Put in a new waste toner box. (See *Replacing the waste toner box* on page 117.) ■ If the problem continues, call Brother Customer Service.
`Cartridge Error` `Put the Black (K) Toner Cartridge back in.` [1] [1] The toner cartridge color with the problem is shown in the message.	The toner cartridge is not installed properly.	Pull out the drum unit, take out the toner cartridge that is indicated on the LCD, and put it back into the drum unit again.
`Change Belt Unit`	It is time to replace the belt unit.	Replace the belt unit. (See *Replacing the belt unit* on page 112.)
`Change PF Kit MP`	It is time to replace the paper feeding kit for the MP tray.	Call Brother Customer Service at 1-877-BROTHER (1-877-276-8437) (in USA) or 1-877-BROTHER (in Canada).
`Change PF Kit 1`	It is time to replace the paper feeding kit for Tray 1.	Call Brother Customer Service at 1-877-BROTHER (1-877-276-8437) (in USA) or 1-877-BROTHER (in Canada).

Error Message	Cause	Action
Cooling Down Wait for a while	The temperature of the drum unit or toner cartridge is too hot. The machine will pause its current print job and go into cooling down mode. During the cooling down mode, you will hear the cooling fan running while the LCD shows Cooling Down, and Wait for a while.	Make sure that you can hear the fan in the machine spinning and that the exhaust outlet isn't blocked by something. If the fan is spinning, remove any obstacles that surround the exhaust outlet, and then leave the machine turned on but do not use it for several minutes. If the fan is not spinning follow the suggestions below. Turn off the machine's power switch and then turn it on again. If the error message continues leave the machine for several minutes and then try it again.
Cover is Open	The front cover is not closed completely.	Close the front cover of the machine.
Cover is Open	The back cover is not closed completely.	Close the back cover of the machine.
Document Jam	The document was not inserted or fed properly, or the document scanned from the ADF was too long.	See *Document jams* on page 69 or *Using the ADF (automatic document feeder)* on page 18.
Drum End Soon	The drum unit is near the end of its life.	Use the drum unit until you have a print quality problem; then replace the drum unit with a new one. (See *Replacing the drum unit* on page 106.)
	The drum unit counter was not reset when a new drum was installed.	Press **Menu**, **5**, **5**, and then ▲ or ▼ to choose Drum. Press **OK** and press **1** to reset the drum unit counter.
Drum Error	The corona wires on the drum unit need to be cleaned.	Clean the four corona wires on the drum unit. (See *Cleaning the corona wires* on page 87.)
EL Error	The machine has a mechanical problem.	Open the front cover and close it again.
Fuser Error	The temperature of fuser unit does not rise at a specified temperature within specified time.	Turn the power switch off, wait a few seconds, and then turn it on again. Leave the machine for 15 minutes with the power on.
	The fuser unit is too hot.	
Fuser Unit End	It is time to replace the fuser unit.	Call Brother Customer Service to replace the fuser unit.
Init Unable XX	The machine has a mechanical problem.	Turn off the machine’s power switch and then turn it on again. If the error message continues leave the machine for several minutes and then try to print, copy or scan again.
Jam Duplex (DCP-9042CDN only)	The paper is jammed in the duplex tray.	(See *Paper is jammed underneath Paper Tray 1 or in the fuser unit (DCP-9042CDN only)* on page 78.)

Error Message	Cause	Action
Jam Rear	The paper is jammed in the back of the machine.	(See *Paper jams* on page 70.)
Jam Inside	The paper is jammed inside the machine.	(See *Paper jams* on page 70.)
Jam MP Tray	The paper is jammed in the MP tray of the machine.	(See *Paper jams* on page 70.)
Jam Tray 1	The paper is jammed in the paper tray of the machine.	(See *Paper jams* on page 70.)
Laser Unit End	It is time to replace the laser unit.	Call Brother Customer Service to replace the laser unit.
Low Temperature	The temperature of the machine is too cold.	Increase room temperature to allow the machine to operate.
No Belt Unit	The belt unit is not installed.	Install the belt unit. (See *Replacing the belt unit* on page 112.)
No Drum Unit	The drum unit is not installed.	Install the drum unit. (See *Replacing the drum unit* on page 106.)
No Paper	The machine is out of paper or paper is not properly loaded in the paper tray.	Do one of the following: ■ Refill the paper in the paper tray or MP tray. ■ Remove the paper and load it again.
No Tray	The paper tray is not completely closed.	Close the paper tray properly.
No Waste Toner	The waste toner box is not installed.	Install the waste toner box. (See *Replacing the waste toner box* on page 117.)
Out of Memory	The machine's memory is full.	**Copy operation in progress** Do one of the following: ■ Press **Black Start** or **Color Start** to copy the scanned pages. ■ Press **Stop/Exit** and wait until the other operations in progress finish, and then try again. ■ Clear the data from the memory. (See *Out of memory message* on page 32.) **Print operation in process** Reduce print resolution. (See *Advanced tab in the Software User's Guide on the CD-ROM*.)
Print Unable XX	The machine has a mechanical problem.	Turn off the machine's power switch and then turn it on again. If the error message continues leave the machine for several minutes and then try to print, copy or scan again.

C

Error Message	Cause	Action
Registration	Registration failed.	Press **Black Start** or **Color Start** and try again. Do one of the following: ■ Try Manual Registration, **Menu**, **3**, **7**. (See *Manual Registration on the Software User's Guide on the CD-ROM*.) ■ Put in a new belt unit. (See *Replacing the belt unit* on page 112.) ■ Put in a new drum unit. (See *Replacing the drum unit* on page 106.) ■ Replace the empty toner cartridge with a new one. (See *Replacing a toner cartridge* on page 101.) ■ Turn off the machine's power switch. Wait a few seconds, then turn it on again. ■ If the problem continues, call Brother Customer Service.
Scan Unable XX	The machine has a mechanical problem.	Turn off the machine's power switch and then turn it on again. If the error message continues leave the machine for several minutes before you try it again.
Toner Life End Replace Black(K) Toner Cartridge. [1] [1] The toner cartridge color which is used up is shown in the message.	The drum unit and toner cartridges assembly is not installed properly, or one or more of the toner cartridges have reached the end of their life and printing is not possible.	Do one of the following: ■ Re-install the toner cartridges and drum unit assembly. ■ Replace the toner cartridge with a new one. (See *Replacing a toner cartridge* on page 101.) ■ If one of the color toner cartridges has reached the end of its life, choose **Mono** in the printer driver to be able to continue printing in monochrome.
Toner Low Prepare New Black(K) Toner Cartridge. [1] [1] The toner cartridge color which is near the end of life is shown in the message.	If the LCD shows Toner Low, you can still print; however, the machine is telling you that the toner cartridge is near the end of its life.	Order a new toner cartridge now for the toner cartridge color that is low.
Waste Toner Full	It is time to replace the waste toner box.	Replace the waste toner box. (See *Replacing the waste toner box* on page 117.)
Waste Toner Soon	The waste toner box is almost full.	Be ready to replace the waste toner box. (See *Replacing the waste toner box* on page 117.)
Wrong Paper Size	The paper in the tray is not the correct size or the tray is empty.	Load the correct size of paper in the tray.

Document jams

If the document is jammed, follow the steps below.

Document is jammed in the top of the ADF unit

The document may get jammed if it is not inserted or fed properly, or if it is too long. Follow the steps below to clear a document jam.

1. Take out any paper from the ADF that is not jammed.
2. Open the ADF cover.
3. Pull the jammed document out to the left.

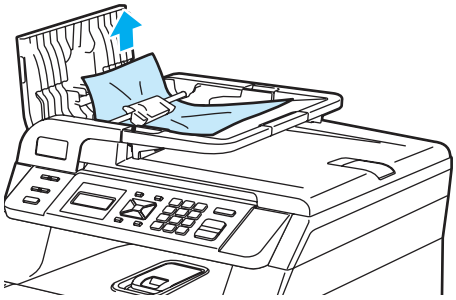

4. Close the ADF cover.
5. Press **Stop/Exit**.

Document is jammed under the document cover

1. Take out any paper from the ADF that is not jammed.
2. Lift the document cover.
3. Pull the jammed document out to the right.

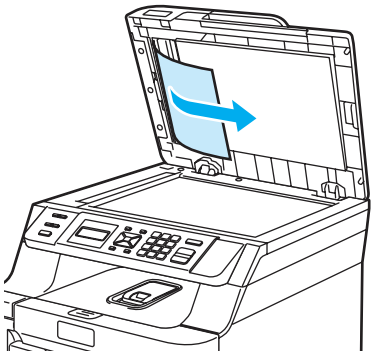

4. Close the document cover.
5. Press **Stop/Exit**.

Document is jammed at the output tray

1. Take out any paper from the ADF that is not jammed.
2. Pull the jammed document out to the right.

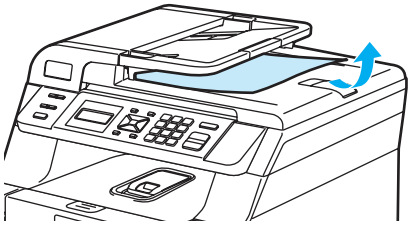

3. Press **Stop/Exit**.

Paper jams

To clear paper jams, please follow the steps in this section.

HOT SURFACE

After you have just used the machine, some internal parts of the machine will be extremely hot. When you open the front or back cover of the machine, DO NOT touch the shaded parts shown in the illustration.

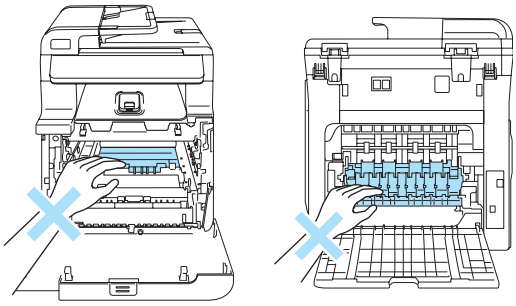

Note

The LCD names for the paper trays are as follows:

- Standard paper tray: `Tray 1`
- Multi-purpose tray: `MP Tray`

Paper is jammed in the MP tray

If the LCD shows `Jam MP Tray`, follow these steps:

```
Jam MP Tray
```

1. Remove the paper from the MP Tray.

2. Remove any jammed paper from in and around the MP tray.

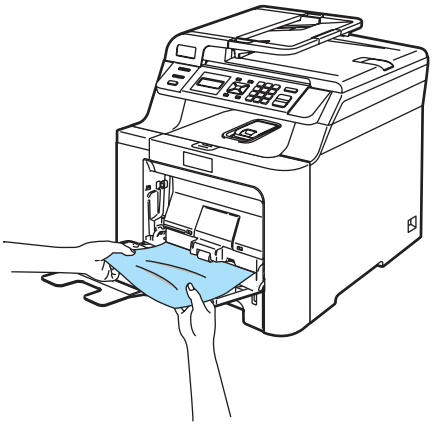

3. Close the MP tray. Then, open the front cover and close it to reset the machine. Open the MP tray again.

4. Fan the paper stack, and then put it back in the MP tray

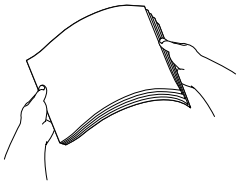

5. When loading paper in the MP tray, make sure that the paper stays under the maximum paper height guides on both sides of the tray.

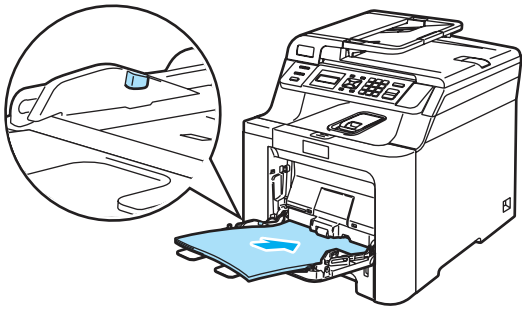

Paper is jammed in Paper Tray 1

If the LCD shows `Jam Tray 1`, follow these steps.

```
Jam Tray 1
```

1. Pull the paper tray completely out of the machine.

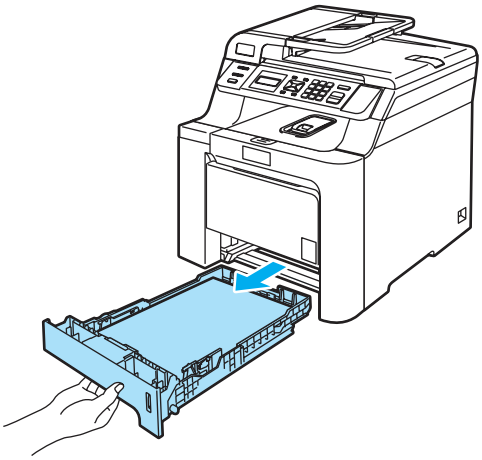

2. Use both hands to slowly pull out the jammed paper.

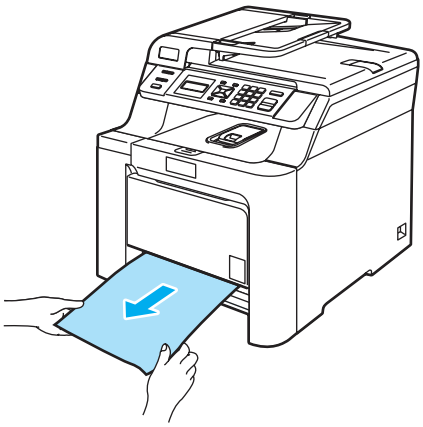

3. Make sure the paper is below the maximum paper mark of the paper tray. While pressing the green paper-guide release lever, slide the paper guides to fit the paper size. Make sure that the guides are firmly in the slots.

4. Put the paper tray firmly back in the machine.

Paper is jammed inside the machine

If the LCD shows `Jam Inside`, follow these steps.

```
Jam Inside
```

1. Pull the paper tray completely out of the machine.

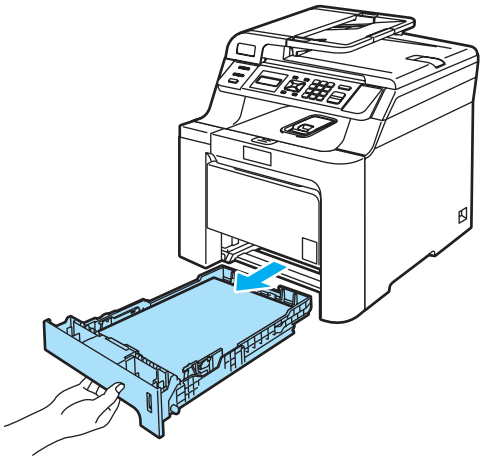

2. Use both hands to slowly pull out the jammed paper.

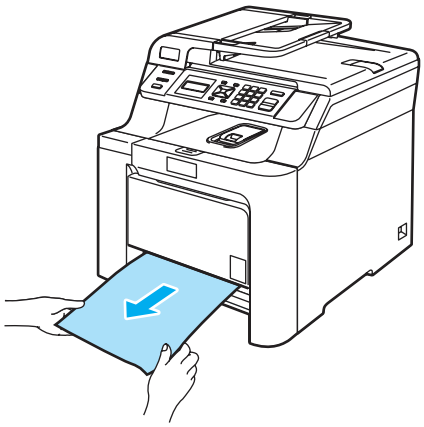

C

3 Press the front cover release button and then open the front cover.

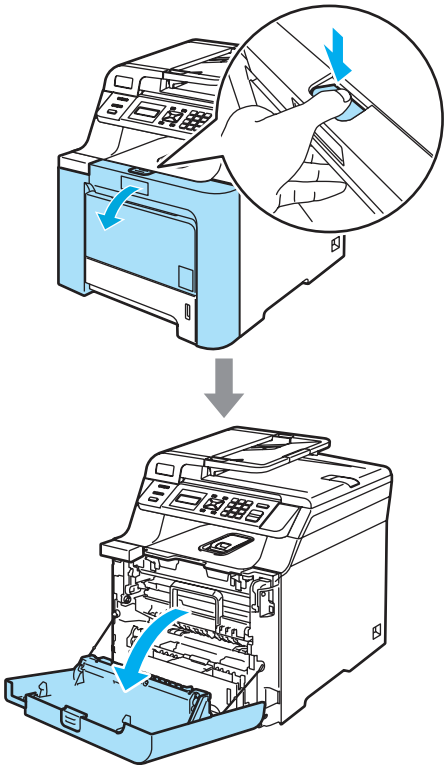

4 Hold the green handle of the drum unit. Lift the drum unit up and then pull it out until it stops.

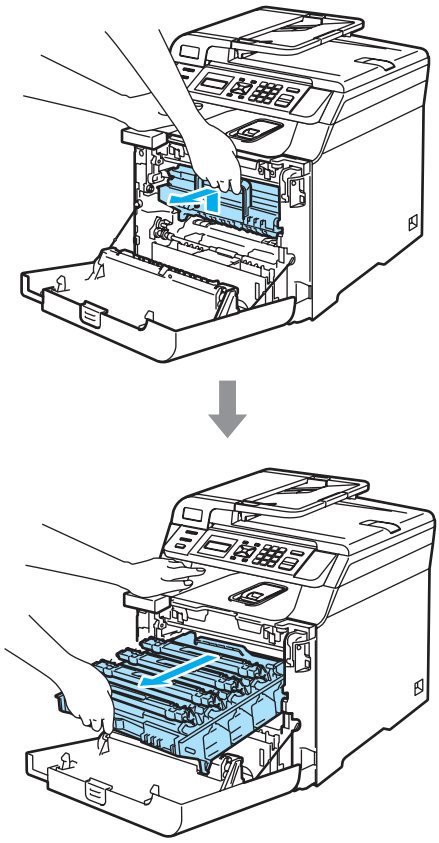

5 Release the gray lock lever (1) that is on the left side of the machine. Lift the front of the drum unit up and pull the drum unit completely out of the machine using the green handles on the drum unit.

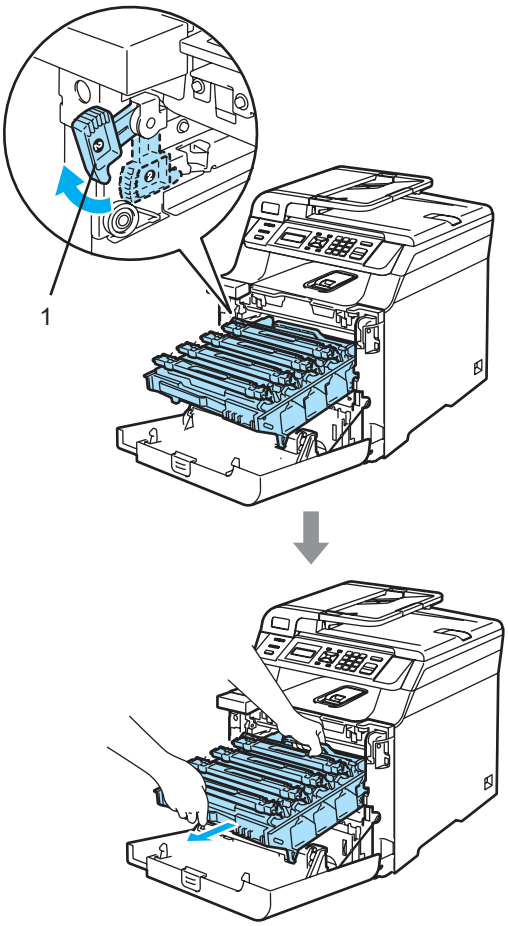

CAUTION

Hold the handles of drum unit when you carry it. DO NOT hold the sides of the drum unit.

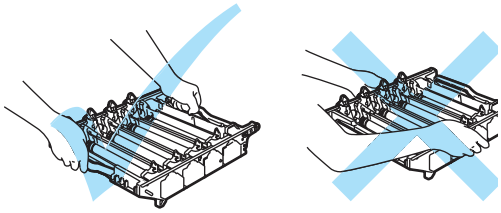

We recommend that you place the drum unit on a clean, flat surface with a piece of disposable paper underneath it in case you accidentally spill or scatter toner.

To prevent damage to the machine from static electricity, DO NOT touch the electrodes shown in the illustration.

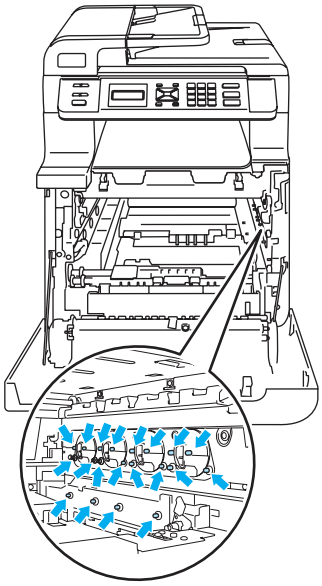

C

6 The jammed paper may be pulled out with the toner cartridge and drum unit assembly, or this may release the paper so you can pull it out of the paper tray opening.

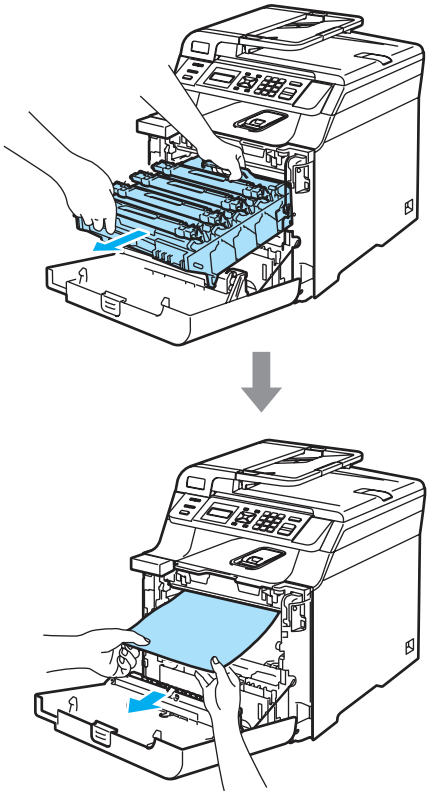

7 Put the drum unit back in the machine as follows.

1 Make sure that the gray lock lever (1) is in the up position and put the drum unit in the machine. Push down the gray lock lever (1).

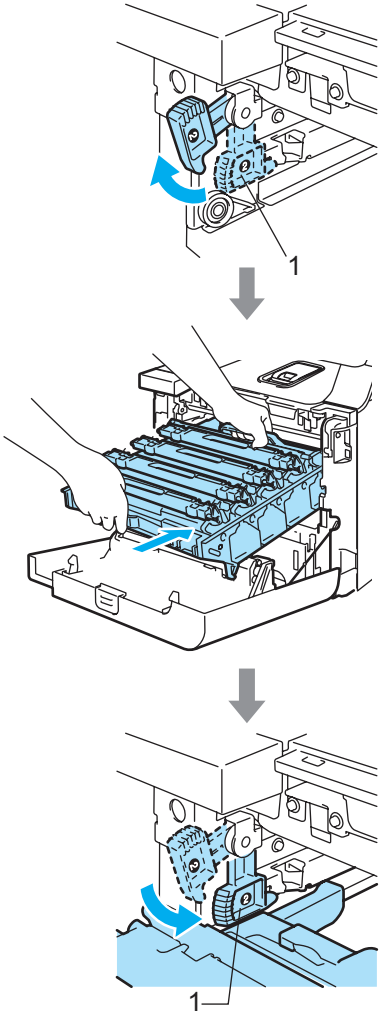

Note

When you put the drum unit in the machine, match the green guides (1) of the drum unit handle to the green arrows (2) on both sides of the machine.

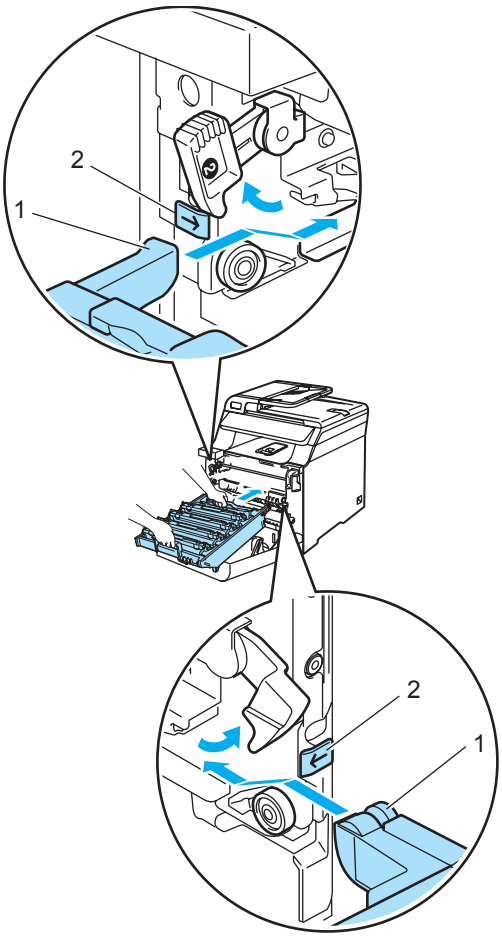

2 Push the drum unit in until it stops.

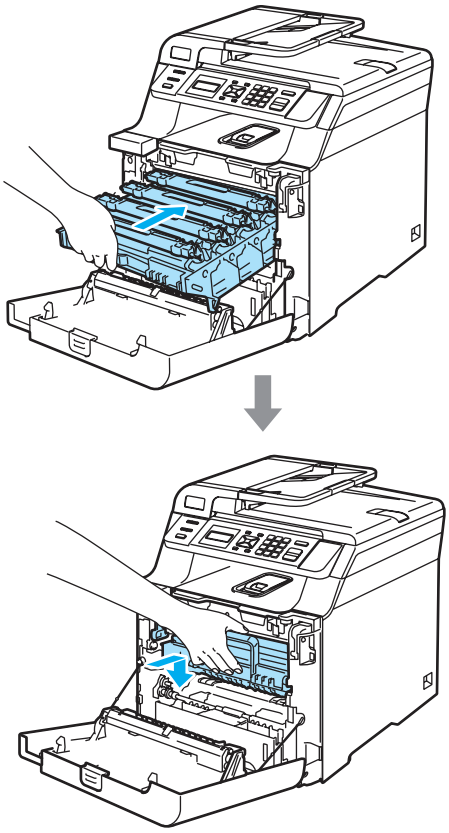

8 Close the front cover of the machine.

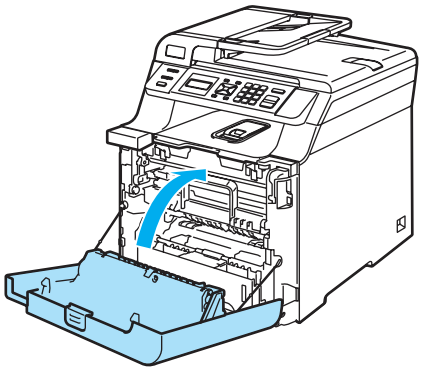

9 Put the paper tray firmly back in the machine.

C

Paper is jammed at the back of the machine

If the LCD shows `Jam Rear`, follow these steps:

```
Jam Rear
```

1. Press the cover release lever to open the front cover.

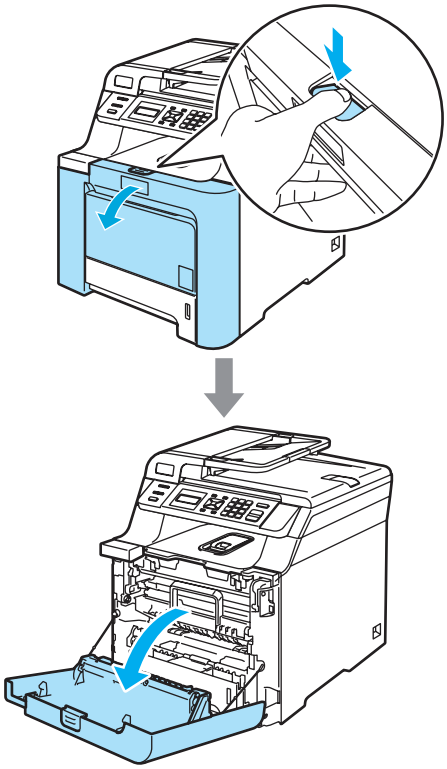

2. Hold the green handle of the drum unit. Lift the drum unit up and then pull it out until it stops.

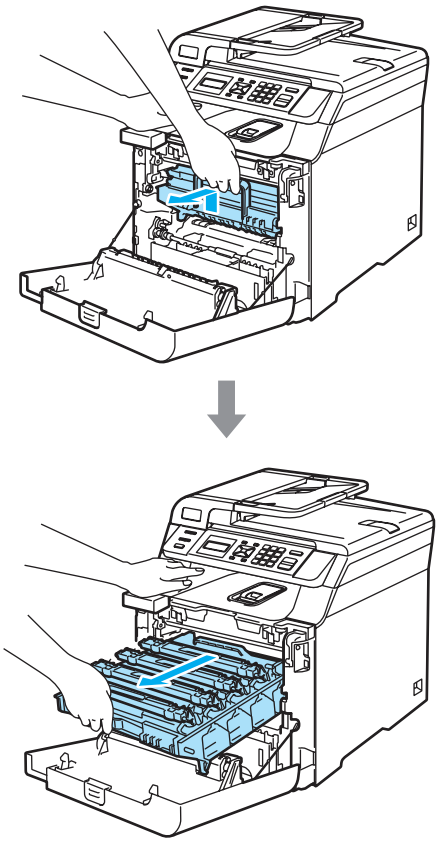

3. Open the back cover.

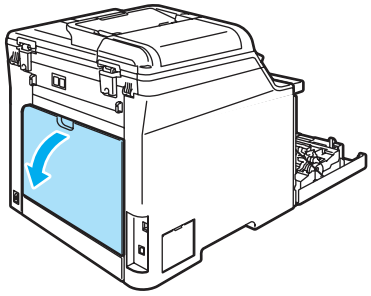

4 Pull down the two green levers, one on the left-hand-side and one on the right-hand-side, as shown in the illustration below, and then fold down the fuser cover (1).

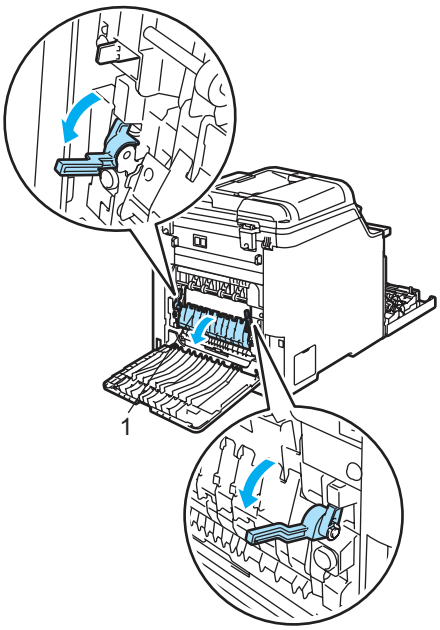

HOT SURFACE

After you have just used the machine, some internal parts of the machine will be extremely hot. When you open the front or back cover of the machine, DO NOT touch the shaded parts shown in the illustration.

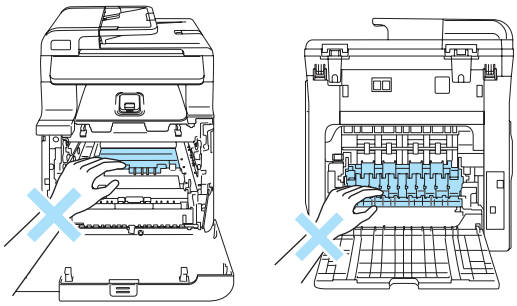

5 Using both hands, gently pull the jammed paper out of the fuser unit.

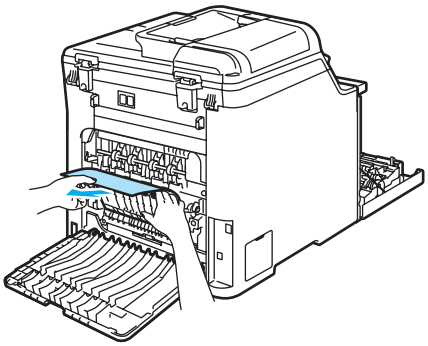

6 Close the fuser cover (1) and lift the two green levers at the left and right hand sides.

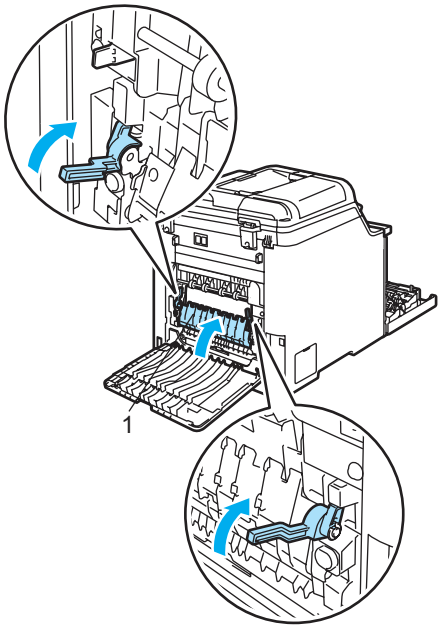

C

7 Close the back cover.

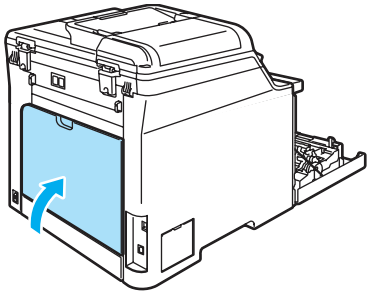

8 Put the drum unit and toner cartridge assembly back in the machine.

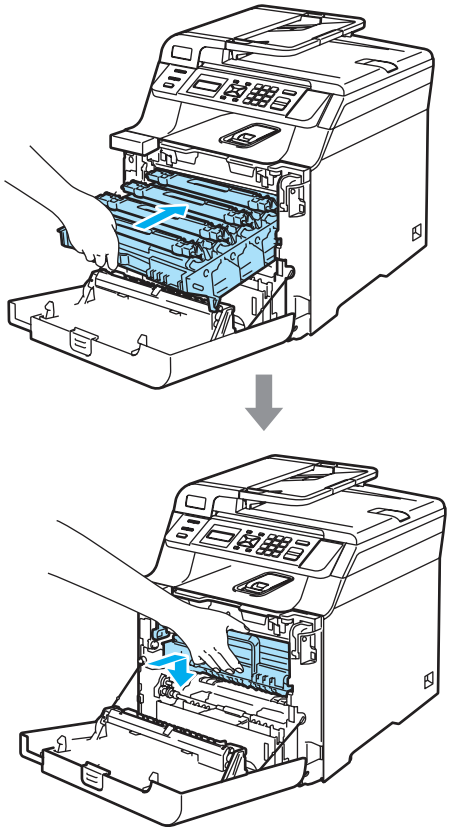

9 Close the front cover of the machine.

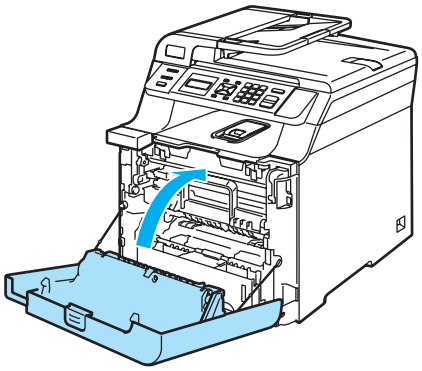

Paper is jammed underneath Paper Tray 1 or in the fuser unit (DCP-9042CDN only)

If the LCD shows `Jam Duplex`, follow these steps:

```
Jam Duplex
```

1 Pull the paper tray completely out of the machine and check inside the machine.

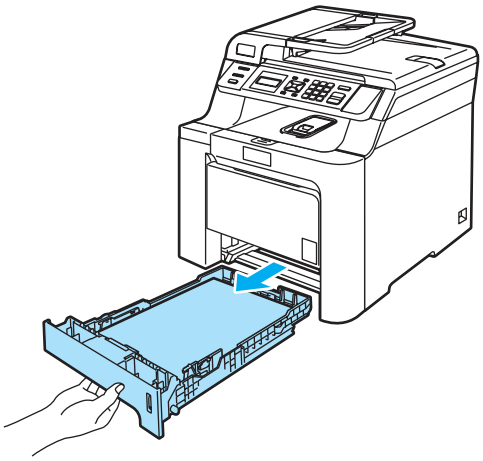

2 If paper is not caught inside the machine, check underneath the paper tray.

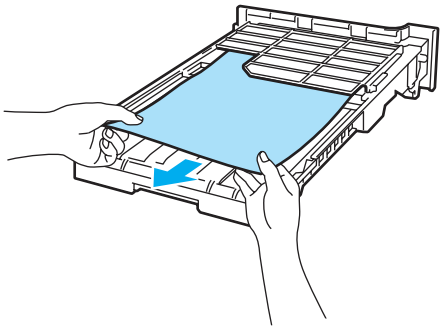

Note

DO NOT put the paper tray back in at this point.

3 If the paper is not caught in the paper tray, open the back cover.

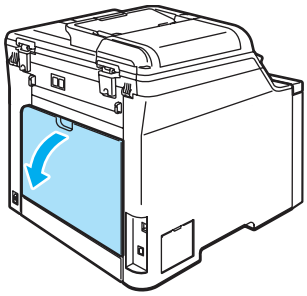

4 Push the gray lever on the left hand side (1) to the right.

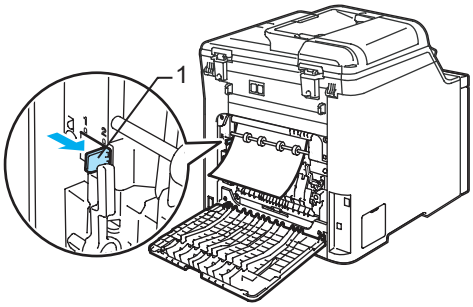

HOT SURFACE

After you have just used the machine, some internal parts of the machine will be extremely hot. When you open the front or back cover of the machine, DO NOT touch the shaded parts shown in the illustration.

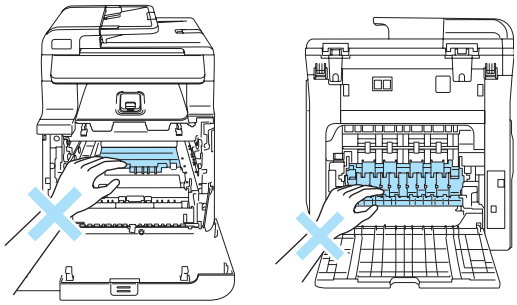

5 Pull out the jammed paper slowly.

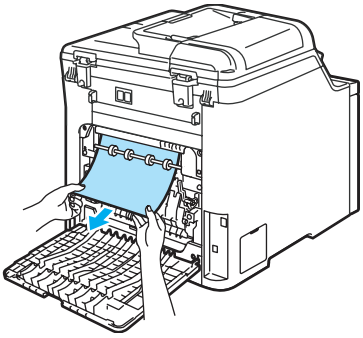

6 Reset the gray lever on the left hand side (1) back to the original position.

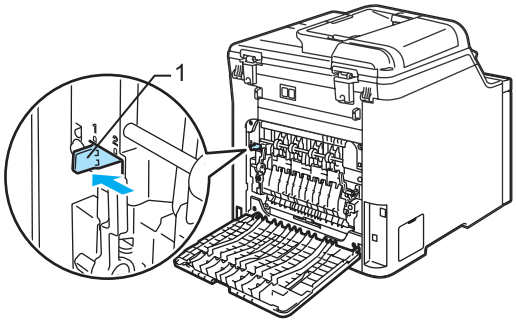

C

7 Close the back cover.

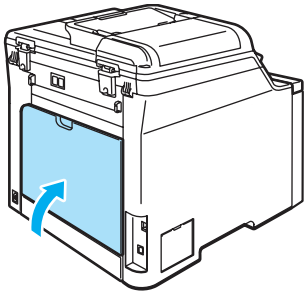

8 Put the paper tray firmly back in the machine.

Routine maintenance

WARNING

Use neutral detergents.

DO NOT use cleaning materials that contain ammonia, alcohol, any type of spray, or any type of flammable substance to clean the outside or inside of the machine. Doing this may cause a fire or electrical shock. For more information see *Important safety instructions* on page 42.

CAUTION

The drum unit contains toner, so handle it carefully. If toner scatters on your hands or clothes, wipe or wash it off with cold water at once.

Cleaning the outside of the machine

Clean the outside of the machine as follows:

1. Turn off the machine's power switch. Disconnect all cables, and unplug the power cord from the AC power outlet.
2. Pull the paper tray completely out of the machine.

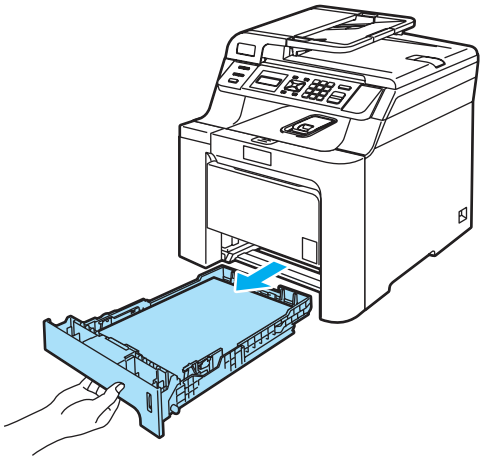

3. Wipe the outside of the machine with a dry, lint-free cloth to remove dust.

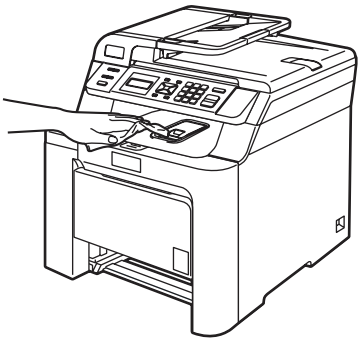

4. Remove anything that is stuck inside the paper tray.

C

5 Wipe the inside of the paper tray with a dry, lint-free cloth to remove dust.

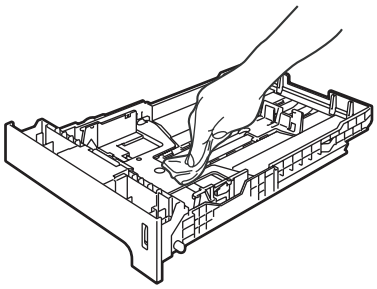

6 Re-load the paper and put the paper tray firmly back in the machine.

7 Plug the machine's power cord back into the AC power outlet first, and reconnect all cables. Turn on the machine's power switch.

Cleaning the scanner

1 Turn off the machine's power switch. Disconnect all cables, and unplug the power cord from the AC power outlet.

2 Lift the document cover (1).
Clean the white plastic surface (2) and scanner glass (3) underneath it with a soft lint-free cloth moistened with a non-flammable, ammonia-free glass cleaner.

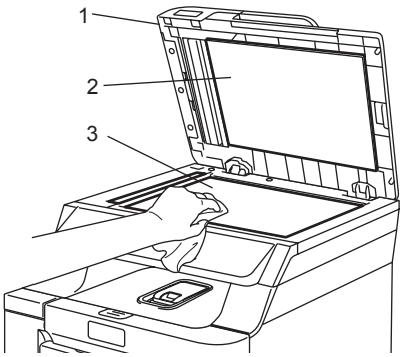

3 In the ADF unit, clean the white bar (1) and the scanner glass strip (2) underneath it with a soft lint-free cloth moistened with a non-flammable, ammonia-free glass cleaner.

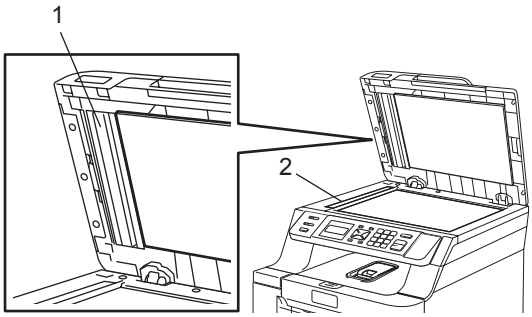

4 Plug the machine's power cord back into the AC power outlet first, and reconnect all cables. Turn on the machine's power switch.

Note

In addition to cleaning the scanner glass and glass strip with a non-flammable, ammonia-free glass cleaner, run your finger tip over the glass to see if you can feel anything on it. If you feel dirt or debris, clean the glass again concentrating on that area. You may need to repeat the cleaning process three or four times. To test, make a copy after each cleaning.

Cleaning the laser scanner windows

CAUTION

Use only a *dry*, lint-free cloth to clean the laser scanner windows.

DO NOT touch the laser scanner windows with your fingers.

1. Turn off the machine's power switch. Disconnect all cables, and unplug the power cord from the AC power outlet.
2. Press the front cover release button and then open the front cover.

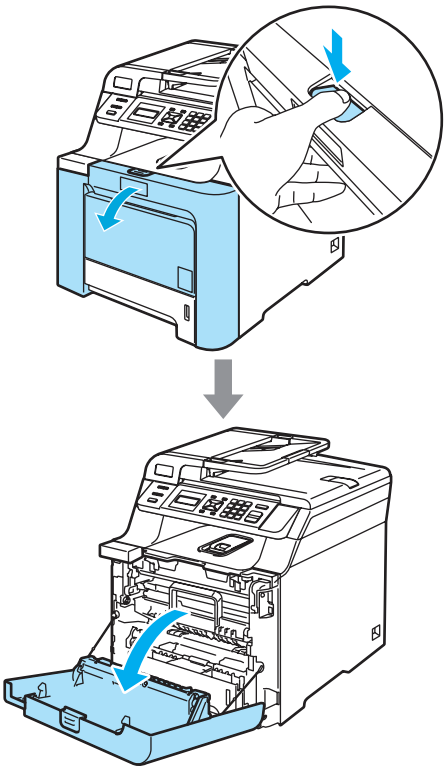

3. Hold the green handle of the drum unit. Lift the drum unit up and then pull it out until it stops.

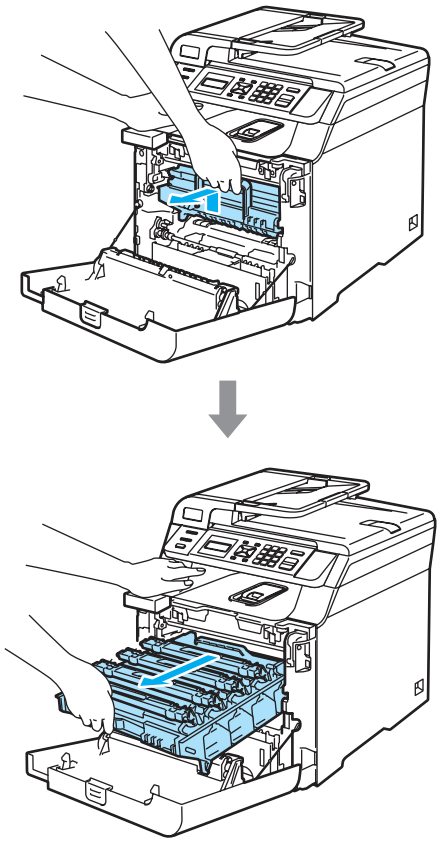

4 Release the gray lock lever (1) that is on the left side of the machine. Lift the front of the drum unit and pull the drum unit completely out of the machine using the green handles on the drum unit.

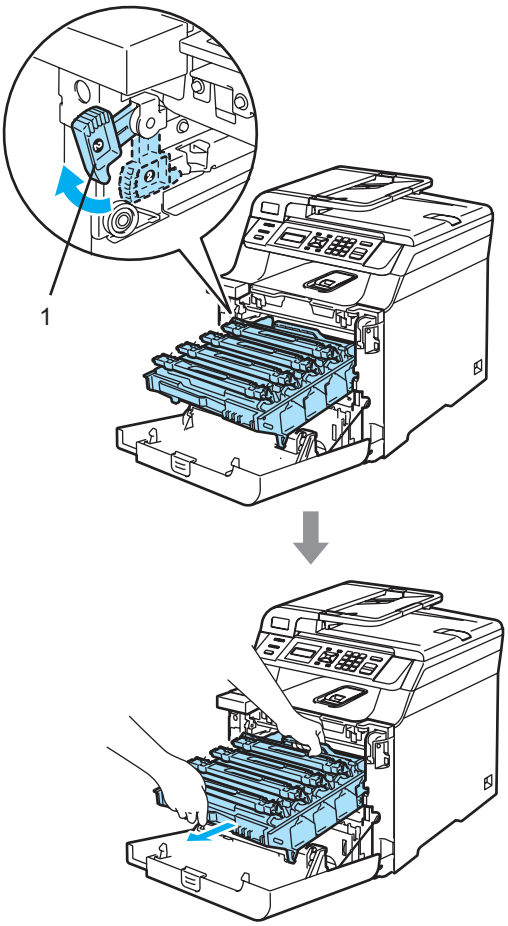

HOT SURFACE

After you have just used the machine, some internal parts of the machine will be extremely hot. When you open the front cover of the machine, DO NOT touch the shaded parts shown in the illustration.

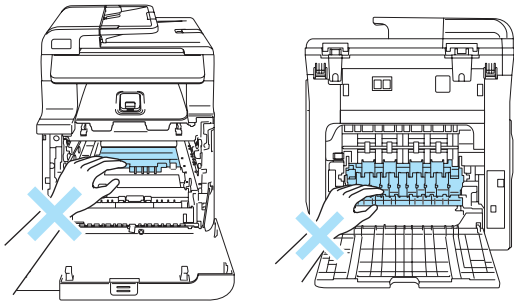

CAUTION

Hold the handles of drum unit when you carry it. DO NOT hold the sides of the drum unit.

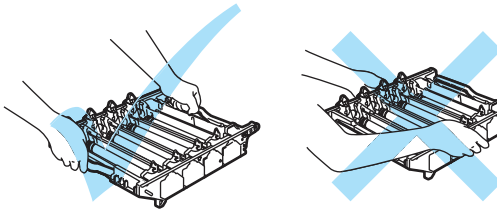

We recommend that you place the drum unit on a clean, flat surface with a piece of disposable paper underneath it in case you accidentally spill or scatter toner.

To prevent damage to the machine from static electricity, DO NOT touch the electrodes shown in the illustration.

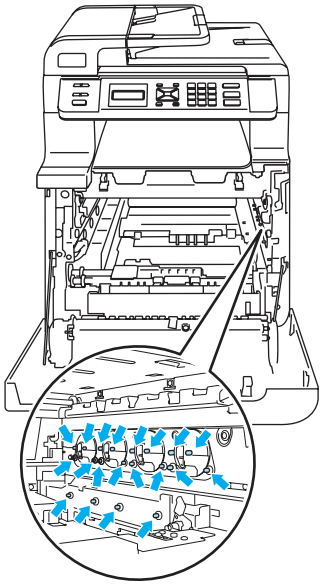

5 Wipe the scanner windows (1) with a dry, lint-free cloth.

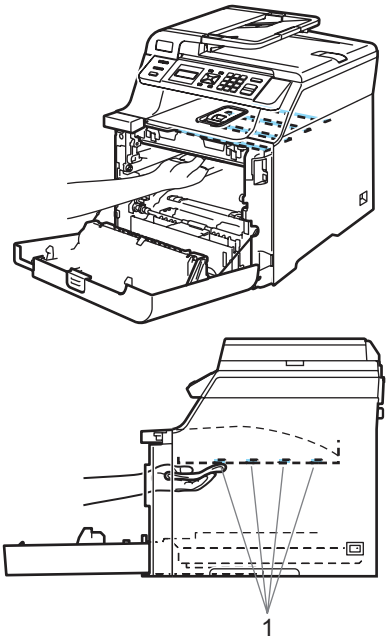

6 Put the drum unit back in the machine as follows.

1 Make sure that the gray lock lever (1) is in the up position and put the drum unit in the machine. Push down the gray lock lever (1).

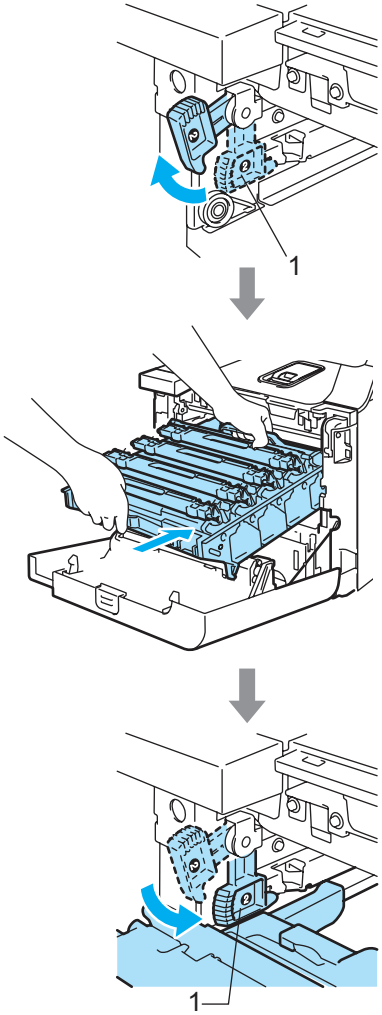

C

Note

When you put the drum unit in the machine, match the green guides (1) of the drum unit handle to the green arrows (2) on both sides of the machine.

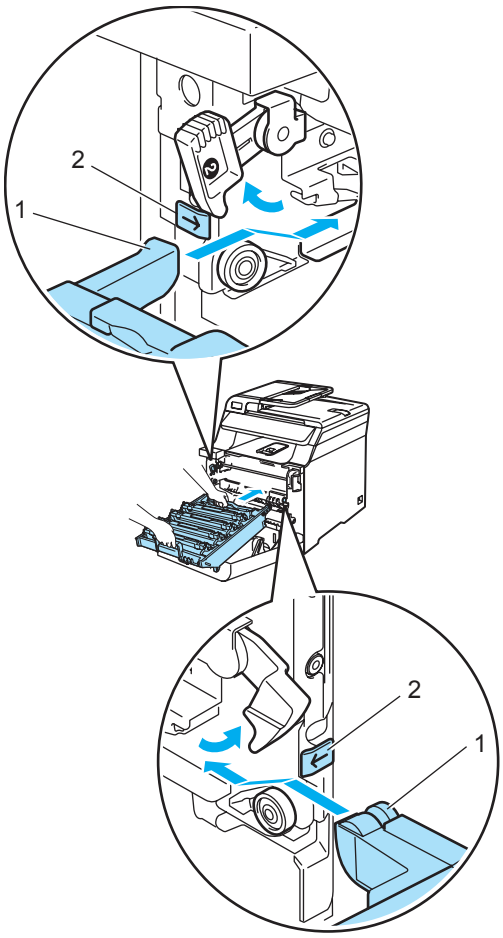

2 Push the drum unit in until it stops.

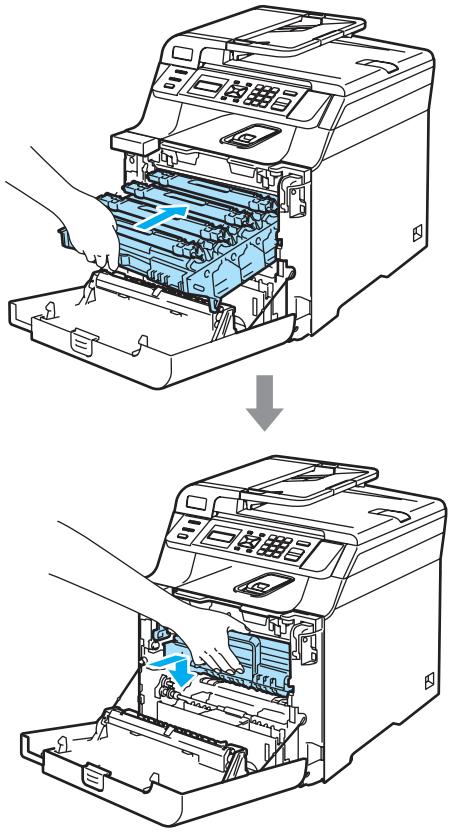

7 Close the front cover of the machine.

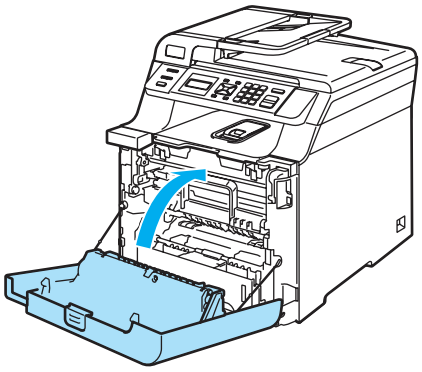

8 Plug the machine's power cord back into the AC power outlet first, and reconnect all cables. Turn on the machine's power switch.

Cleaning the corona wires

If you have print quality problems, clean the corona wires as follows:

1. Turn off the machine's power switch. Disconnect all cables, and unplug the power cord from the AC power outlet.

2. Press the front cover release button and then open the front cover.

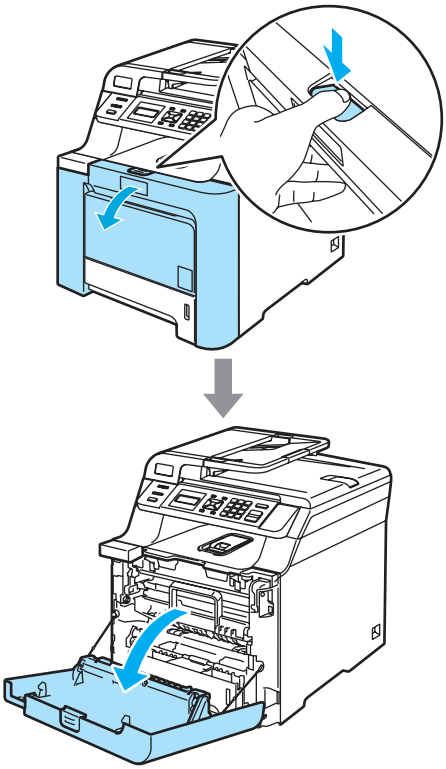

3. Hold the green handle of the drum unit. Lift the drum unit up and then pull it out until it stops.

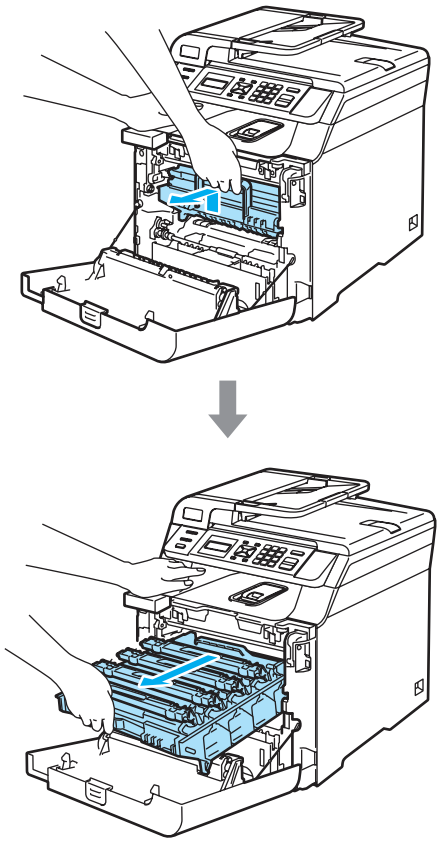

4. Hold the handle of the toner cartridge and pull it out of the drum unit. Repeat this for all the toner cartridges.

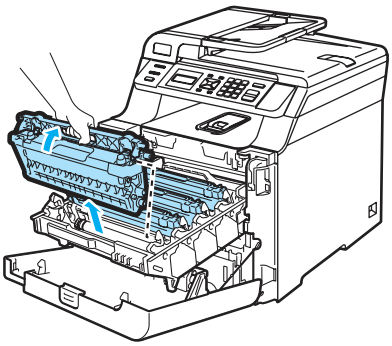

C

CAUTION

We recommend that you place the toner cartridges on a clean, flat surface with a piece of disposable paper underneath it in case you accidentally spill or scatter toner.

DO NOT put a toner cartridge into a fire. It could explode, resulting in injuries.

Handle the toner cartridges carefully. If toner scatters on your hands or clothes, wipe or wash it off with cold water at once.

To avoid print quality problems, DO NOT touch the shaded parts shown in the illustrations.

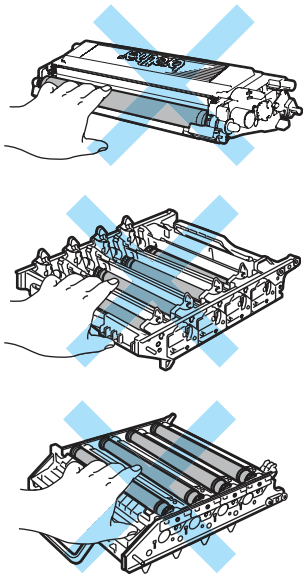

5 Push to release the latches of the white corona wire cover (1), and then open the cover.

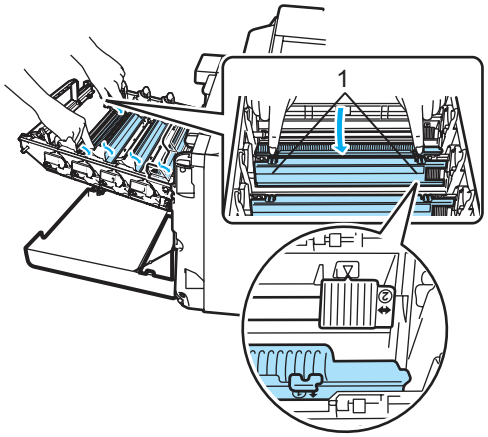

Note

We recommended that you clean the corona wire for each of the colors. If you want to clean only the corona wire of the color that caused the print quality problem, see the illustration below to identify the position of each of the corona wires.

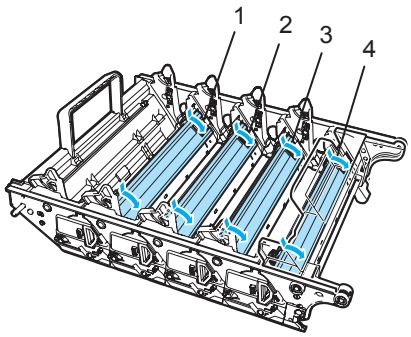

1 **Corona wire cover for Black (K)**

2 **Corona wire cover for Yellow (Y)**

3 **Corona wire cover for Magenta (M)**

4 **Corona wire cover for Cyan (C)**

6 Clean the corona wire inside the drum unit by gently sliding the green tab from left to right and right to left several times.

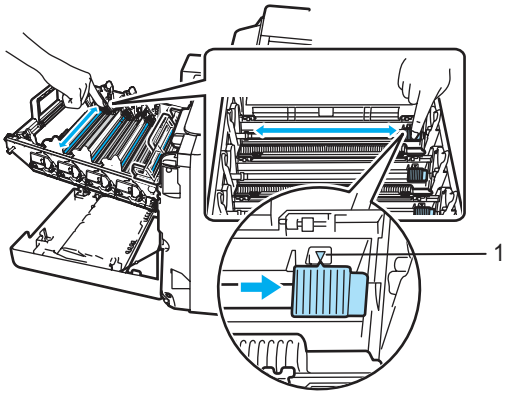

CAUTION

Be sure to return the tab to the home position (▼) (1). If you do not, printed pages may have a vertical stripe.

7 Close the corona wire cover.

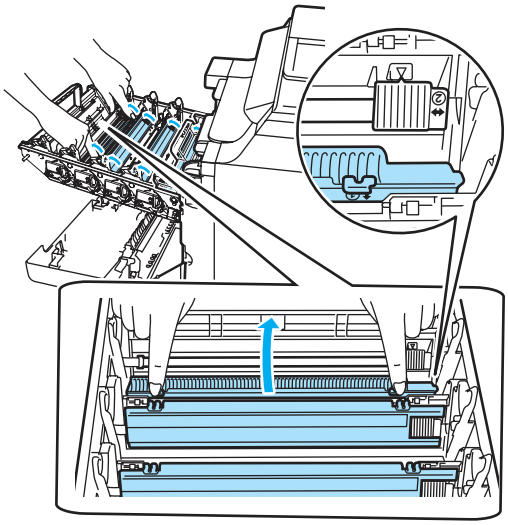

8 Repeat ❺ to ❼ to clean each of the remaining corona wires.

9 Hold the handle of the toner cartridge and slide the toner cartridge into the drum unit. Make sure that you match the toner cartridge color to the same color label on the drum unit, and make sure that you fold down the toner cartridge handle (A) once the toner cartridge is in place. Repeat this for all the toner cartridges.

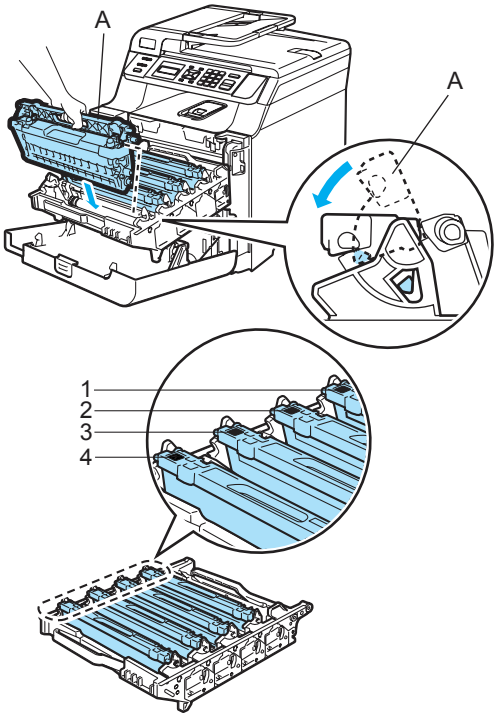

1 Cyan

2 Magenta

3 Yellow

4 Black

C

10 Push the drum unit in until it stops.

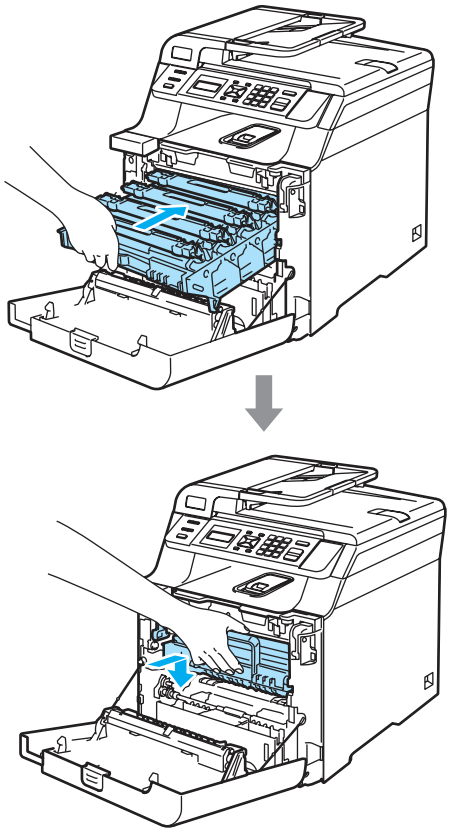

11 Close the front cover of the machine.

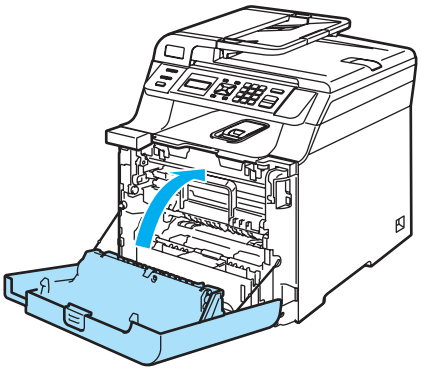

12 Plug the machine's power cord back into the AC power outlet first, and reconnect all cables. Turn on the machine's power switch.

Cleaning the drum unit

If you have the following print quality problems, clean the drum unit as follows.

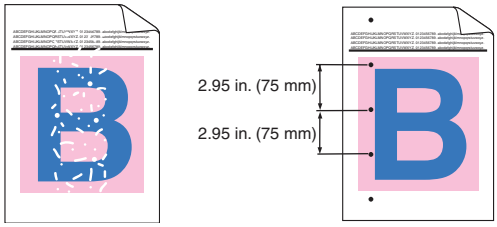

1 Press the front cover release button and then open the front cover.

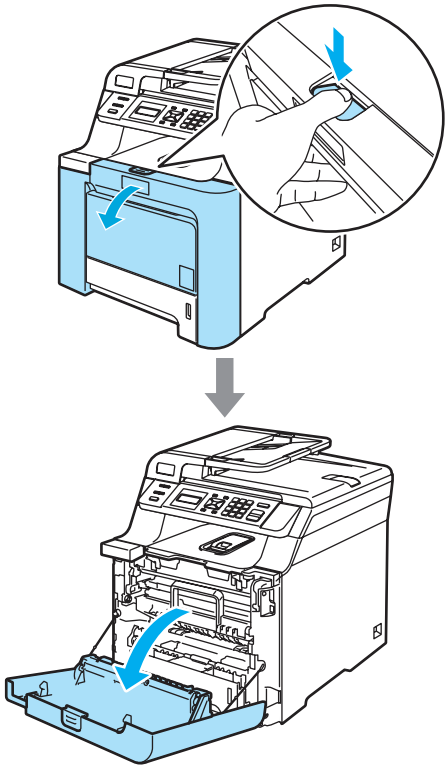

2 Close the front cover of the machine. The machine starts warming up, wait until it finishes warming up before going on to step ❸.

3 Pull out the MP tray (1) and unfold the MP tray support flap (2).

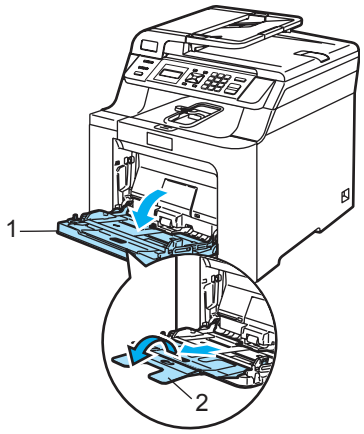

4 Put a blank sheet of A4 or Letter sized paper in the MP tray.

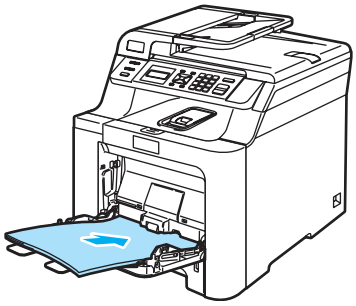

5 While pressing and holding down **Clear/Back** press ◀ until `DRUM CLEANING` is displayed on the LCD.

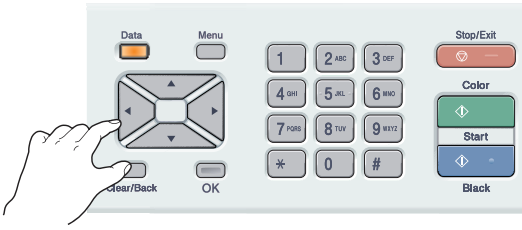

6 Press **Black Start** or **Color Start**. The paper will feed into the machine to start the drum cleaning.

7 The following message appears on the LCD when the machine has finished cleaning.

```
DRUM CLEANING
COMPLETED
```

8 Press **Stop/Exit** so that the machine returns to the Ready state.

9 Try to print again.
If this problem still remains, repeat steps ❸ to ❽ several times.

If the problem still remains after repeating step ❸ to ❽ several times, go to step ❿.

10 Turn off the machine's power switch. Unplug the telephone line cord first, disconnect all cables, and then unplug the power cord from the AC power outlet.

11 Press the front cover release button and then open the front cover.

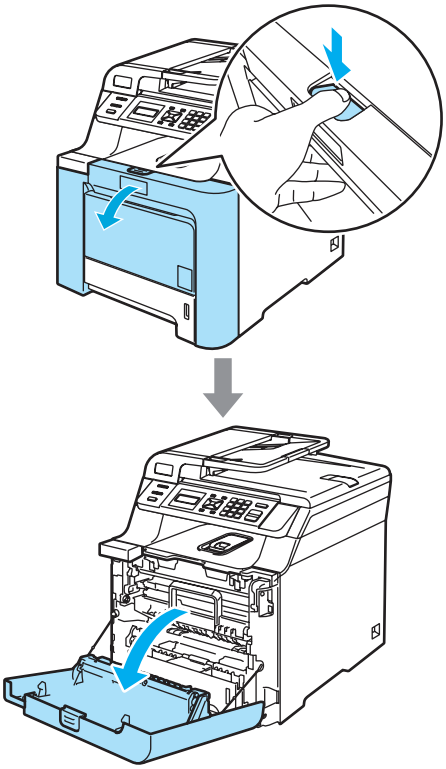

C

12 Hold the green handle of the drum unit. Lift the drum unit up and then pull it out until it stops.

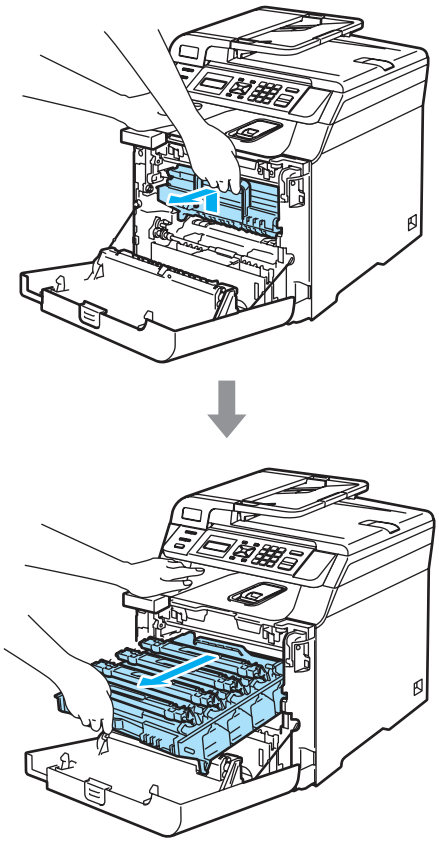

13 Release the gray lock lever (1) that is on the left side of the machine. Lift the front of the drum unit and pull the drum unit completely out of the machine using the green handles on the drum unit.

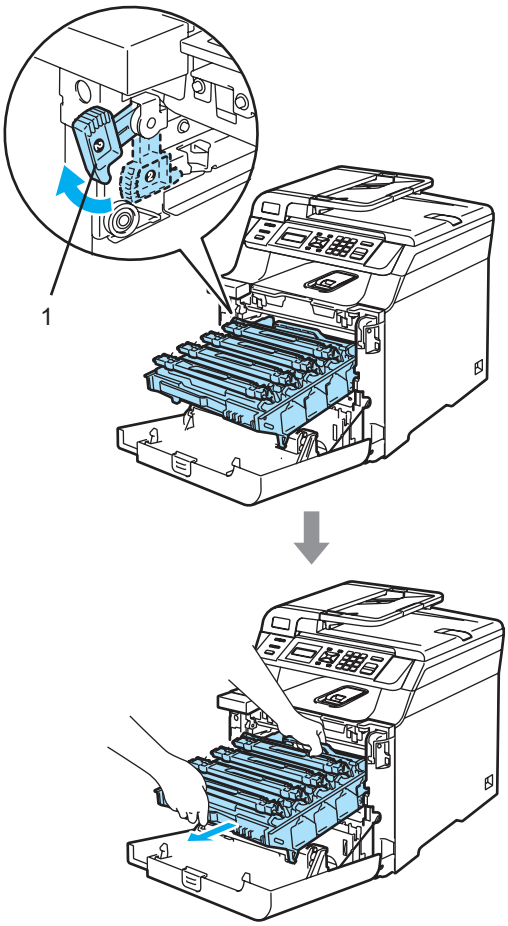

CAUTION

Hold the handles of drum unit when you carry it. DO NOT hold the sides of the drum unit.

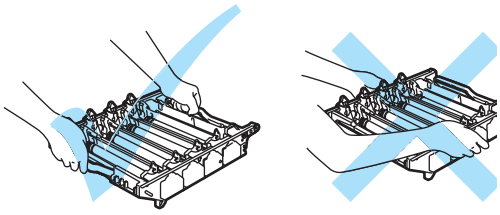

CAUTION

We recommend that you place the drum unit on a clean, flat surface with a piece of disposable paper underneath it in case you accidentally spill or scatter toner.

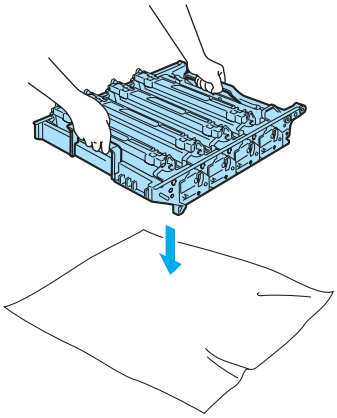

14 Hold the handle of the toner cartridge and pull it out of the drum unit. Repeat this for all of the toner cartridges.

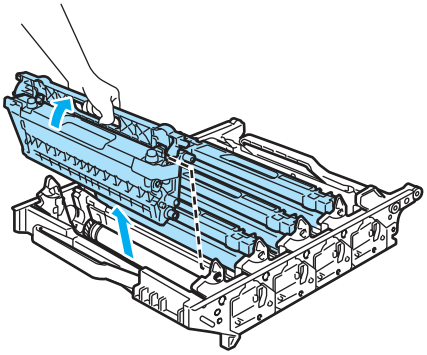

CAUTION

We recommend that you place the toner cartridges on a clean, flat surface with a piece of disposable paper underneath them in case you accidentally spill or scatter toner.

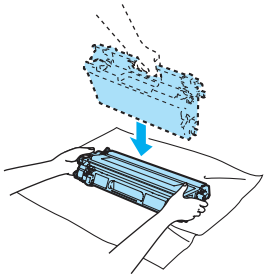

Handle the toner cartridge carefully. If toner scatters on your hands or clothes, wipe or wash it off with cold water at once.

To prevent damage to the machine from static electricity, DO NOT touch the electrodes shown in the illustration.

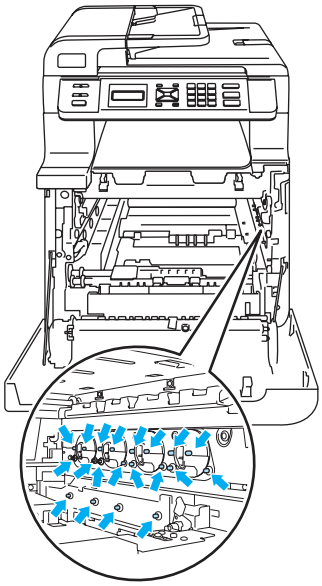

C

CAUTION

To avoid print quality problems, DO NOT touch the shaded parts shown in the illustrations.

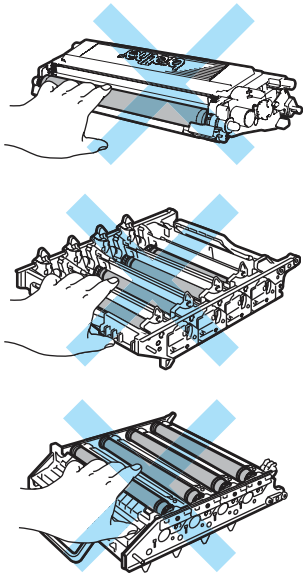

15 Turn the drum unit over by holding the green handles. Make sure that the drum unit gears (1) are on the left hand side.

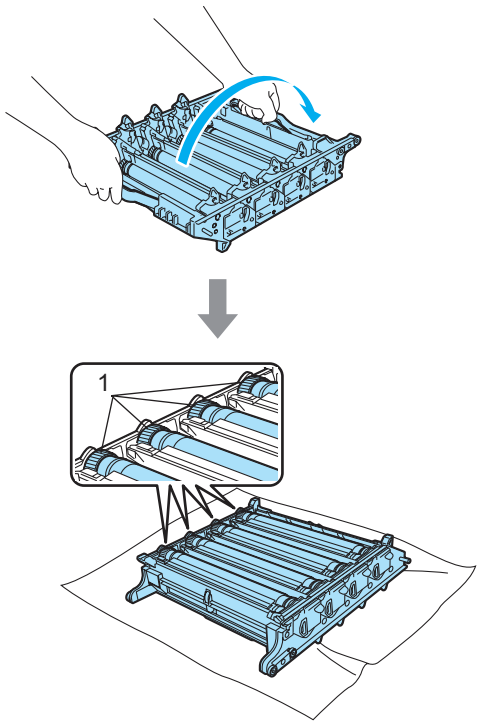

16 See the print sample to identify the color causing the problem. The color of the spots or toner stain is the color of the drum you should clean. For example, if the spots are cyan, you should clean the drum for cyan. Put the print sample in front of the drum, and the find the exact position of the poor print.

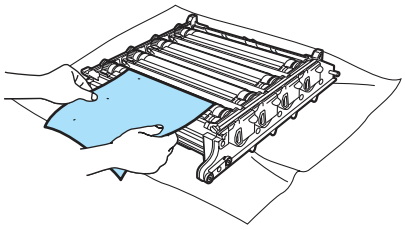

17 Turn the drum unit gear toward you by hand while looking at the surface of the drum (1).

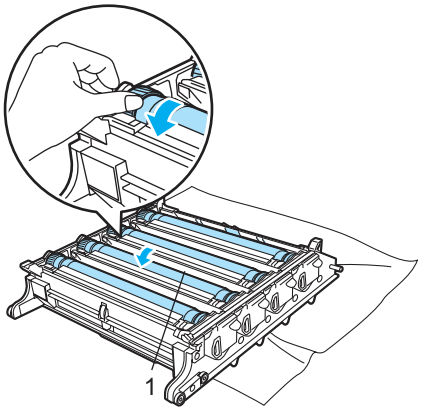

18 When you have found the mark on the drum that matches the print sample, wipe the surface of the drum gently with a dry cotton swab until the dust or paper powder on the surface comes off.

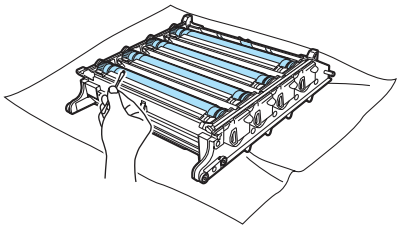

CAUTION

The drum is photosensitive so DO NOT touch it with your fingers.

DO NOT clean the surface of the photosensitive drum with a sharp object.

DO NOT use a scrubbing or wiping motion because this might damage the drum.

19 Turn the drum unit gear toward you by hand to return it to the home position. The home position of each drum can be identified by matching the number on the drum unit gear to the same number on the side of the drum unit as shown in the illustration. Make sure that the number on each of the four drum unit gears matches the corresponding number on the side of the drum unit.

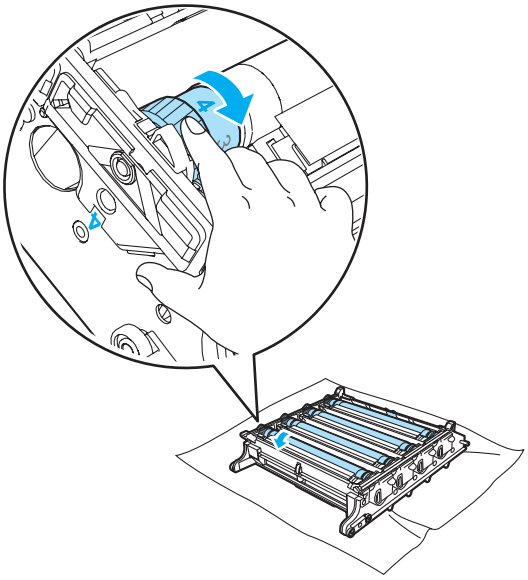

C

20 Hold the handle of the toner cartridge and slide the toner cartridge into the drum unit. Make sure that you match the toner cartridge color to the same color label on the drum unit, and make sure that you fold down the toner cartridge handle (A) once the toner cartridge is in place. Repeat this for all the toner cartridges.

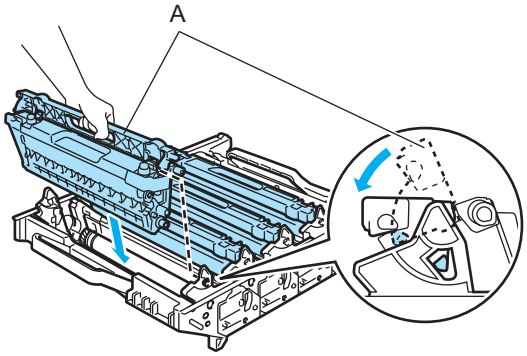

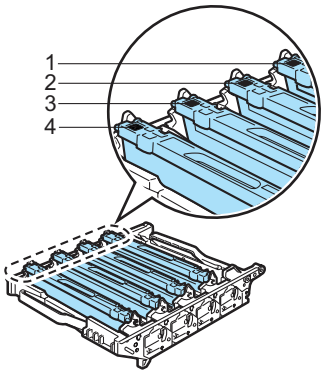

1 **Cyan**

2 **Magenta**

3 **Yellow**

4 **Black**

21 Put the drum unit back in the machine as follows.

1 Make sure that the gray lock lever (1) is in the up position and put the drum unit in the machine. Push down the gray lock lever (1).

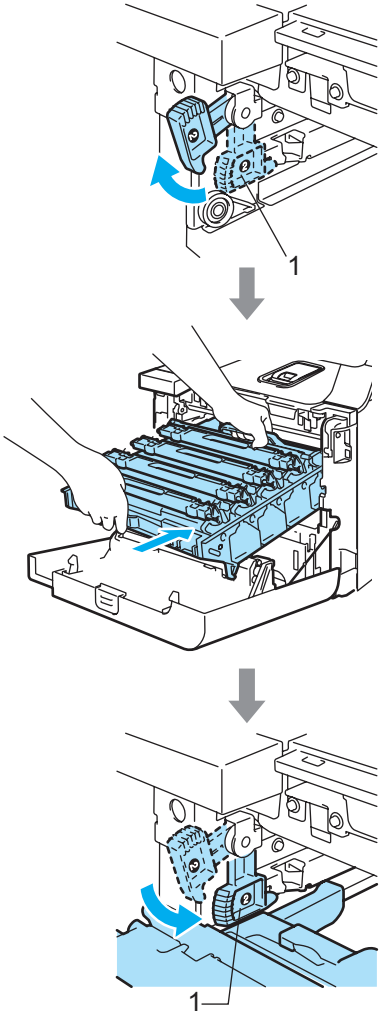

Note

When you put the drum unit in the machine, match the green guides (1) of the drum unit handle to the green arrows (2) on both sides of the machine.

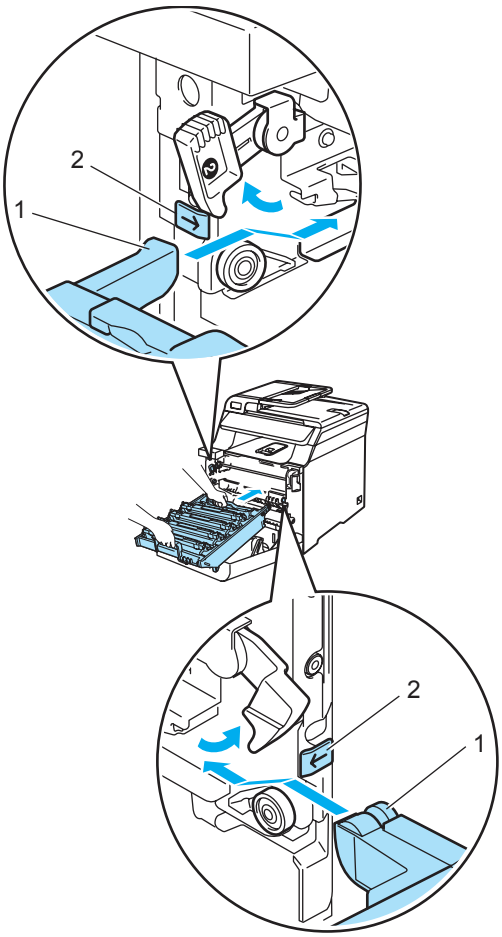

2 Push the drum unit in until it stops.

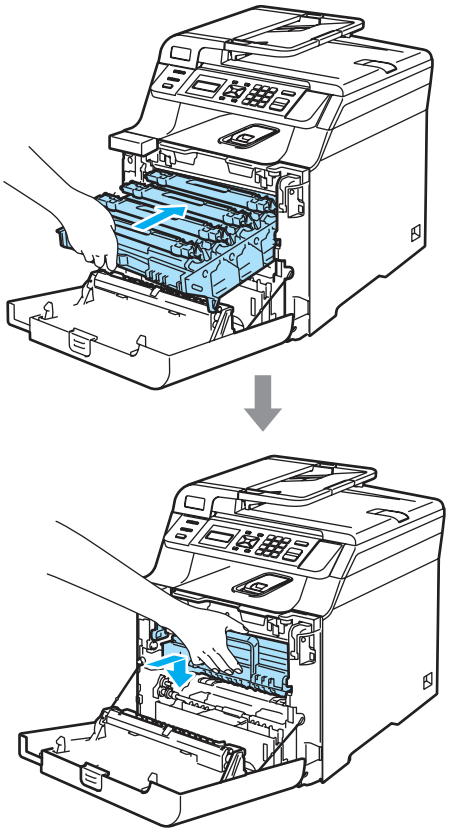

22 Close the front cover of the machine.

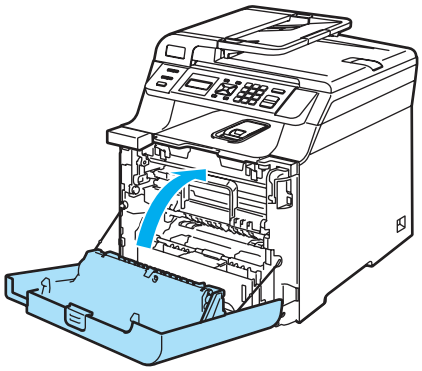

23 Plug the machine's power cord back into the AC power outlet first, and reconnect all cables. Turn on the machine's power switch.

C

Replacing the consumable items

You will need to replace the following consumable items regularly. When the time comes to replace consumable items, the following messages will appear on the LCD.

The following are maintenance messages that appear on the LCD in the Ready mode. These message provide advanced warnings to replace the consumable items before they run out. To avoid any inconvenience, you may wish to buy spare consumable items before the machine stops printing.

LCD messages	Consumable item to replace	Approximate life	How to replace	Order No.
`Toner Low` `Prepare New Black(K) Toner Cartridge.` [1]	Toner cartridges standard	2,500 pages (Black) [2] 1,500 pages (Cyan, Magenta, Yellow) [2]	See *Replacing a toner cartridge* on page 101.	TN-110BK TN-110C TN-110M TN-110Y
	Toner cartridges high yield	5,000 pages (Black) [2] 4,000 pages (Cyan, Magenta, Yellow) [2]		TN-115BK TN-115C TN-115M TN-115Y
`Waste Toner Soon`	Waste toner box	20,000 pages [3]	See *Replacing the waste toner box* on page 117.	WT-100CL

[1] The toner cartridge color that is near the end of life is shown in the message.

[2] Approx. yields based on 5% page coverage (Letter). The actual number of printed pages will vary depending on the print jobs and paper you use.

[3] When printing on Letter size paper at 5% print coverage for CMYK each. The actual number of printed pages will vary depending on the print jobs and paper you use.

The machine will stop printing when the following maintenance messages appear on the LCD.

LCD messages	Consumable item to replace	Approximate life	How to replace	Order No.

`Toner Life End`
`Replace Black(K)`
`Toner Cartridge.` [1]
	Toner cartridges standard	2,500 pages (Black) [2]
		1,500 pages (Cyan, Magenta, Yellow) [2]
			See *Replacing a toner cartridge* on page 101.	TN-110BK
				TN-110C
				TN-110M
				TN-110Y

	Toner cartridges high yield	5,000 pages (Black) [2] 4,000 pages (Cyan, Magenta, Yellow) [2]		TN-115BK TN-115C TN-115M TN-115Y
`Waste Toner Full`	Waste toner box	20,000 pages [3]	See *Waste Toner Box Full message* on page 117.	WT-100CL

[1] The toner cartridge color that is used up is shown in the message.

[2] Approx. yields based on 5% page coverage (Letter). The actual number of printed pages will vary depending on the print jobs and paper you use.

[3] When printing on Letter size paper at 5% print coverage for CMYK each. The actual number of printed pages will vary depending on the print jobs and paper you use.

The following are maintenance messages that appear alternately with the normal message on the upper row of the LCD when the machine is in the Ready mode. These messages advise you that you will need to replace each of the consumable items as soon as possible, since the consumable item's end of life has been reached. The machine will continue printing when any of these messages appear on the LCD.

LCD messages	Consumable item to replace	Approximate life	How to replace	Order No.
`Drum End Soon`	Drum unit	17,000 pages [1]	See *Replacing the drum unit* on page 106.	DR-110CL
`Change Belt Unit`	Belt unit	50,000 pages [2]	See *Replacing the belt unit* on page 112.	BU-100CL
`Fuser Unit End`	Fuser unit	80,000 pages [3]	Call Brother Customer Service to replace the fuser unit.	—
`Laser Unit End`	Laser unit	100,000 pages [3]	Call Brother Customer Service to replace the laser unit.	—
`Change PF Kit 1`	Paper feeding kit 1 (Paper pick-up roller and Separator pad for Tray 1)	100,000 pages [3]	Call Brother Customer Service to replace the paper feeding kit 1.	—
`Change PF Kit MP`	Paper feeding kit MP (Paper pick-up roller and Separator pad for MP tray)	50,000 pages [3]	Call Brother Customer Service to replace the paper feeding kit MP.	—

[1] Drum yield is approximate, and may vary by type of use.

[2] When printing on Letter size paper.

[3] When printing on Letter or A4 size paper. The actual number of printed pages will vary depending on the print jobs and paper you use.

Note

- Discard used consumable items according to local regulations, keeping it separate from domestic waste. If you have questions, call your local waste disposal office. Be sure to reseal the consumable items tightly so that the material inside does not spill.
- We recommend placing used consumable items on a piece of paper to prevent accidentally spilling or scattering the material inside.
- If you use paper that is not a direct equivalent for the recommended paper, the life of consumable items and machine parts may be reduced.
- The projected life for toner cartridges and a waste toner box is based on an average 5% coverage of the printable area using any color toner cartridge. Frequency of replacement will vary depending on the complexity of printed pages, percentage of coverage and type of media used.

Replacing a toner cartridge

Order Numbers:

Toner Cartridge Standard:
TN-110 (BK, C, M, Y)

Toner Cartridge High Yield:
TN-115 (BK, C, M, Y)

The High Yield toner cartridges can print approximately 5,000 pages (Black) and approximately 4,000 pages each (Cyan, Magenta and Yellow). The Standard toner cartridges can print approximately 2,500 pages (Black) and approximately 1,500 pages each (Cyan, Magenta and Yellow). Actual page count will vary depending on your average type of document (i.e., standard letter, detailed graphics).

Toner low message

```
Toner Low
Prepare New
```

The machine is supplied with the Standard TN-110 toner cartridge that must be replaced after approximately 2,500 pages (Black) and 1,500 pages each (Cyan, Magenta and Yellow). When a toner cartridge is running low, the LCD shows `Toner Low`. (For details about the specific order number for each toner cartridge color by page yield, see *Ordering accessories and supplies* on page ii.)

Note

It is a good idea to keep a new toner cartridge ready for use when you see the `Toner Low` warning.

Toner life end message

When the following message appears on the LCD, you need to replace the toner cartridge. The second line of the LCD indicates which color you need to replace.

```
Toner Life End
Replace Black(K)
```

Discard the used toner cartridge according to local regulations, keeping it separate from domestic waste. Be sure to seal up the toner cartridge tightly so that toner powder does not spill out of the cartridge. If you have questions, call your local waste disposal office.

Note

We recommend that you clean the machine and corona wires of the drum unit when you replace a toner cartridge. (See *Cleaning the laser scanner windows* on page 83 and *Cleaning the corona wires* on page 87.)

Replacing the toner cartridges

HOT SURFACE

After you have just used the machine, some internal parts of the machine will be extremely hot. When you open the front or back cover of the machine, DO NOT touch the shaded parts shown in the illustration.

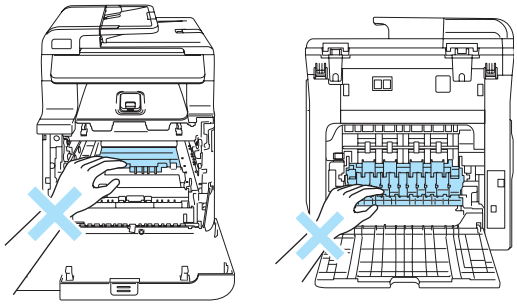

C

1 Press the front cover release button and then open the front cover.

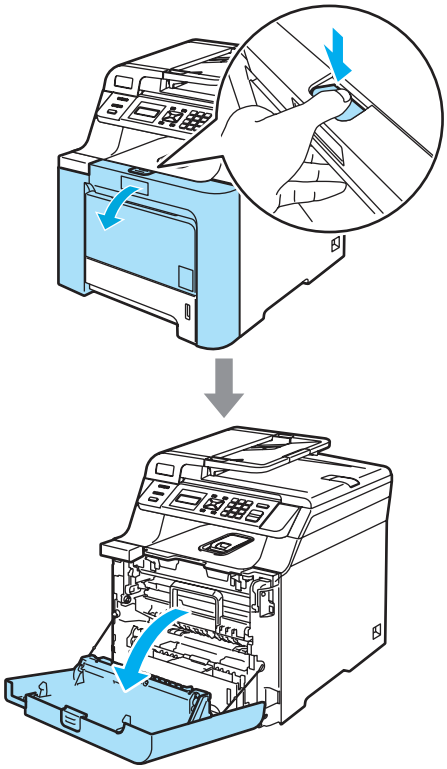

2 Hold the green handle of the drum unit. Lift the drum unit up and then pull it out until it stops.

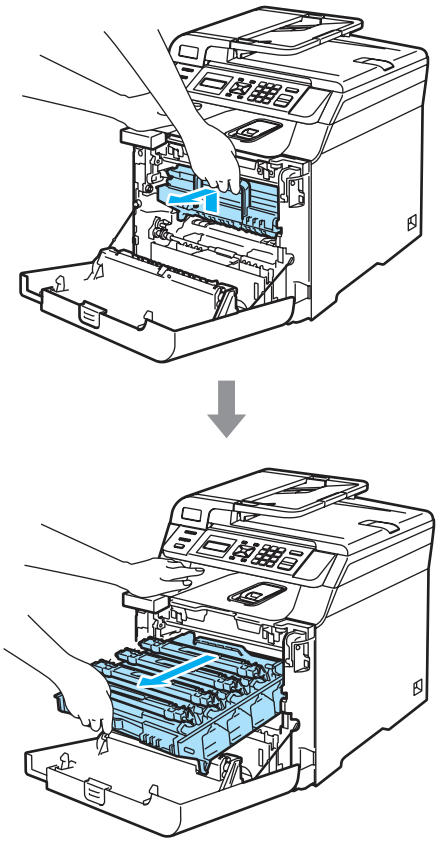

3 Hold the handle of the toner cartridge and pull it out of the drum unit. Repeat this for all the toner cartridges.

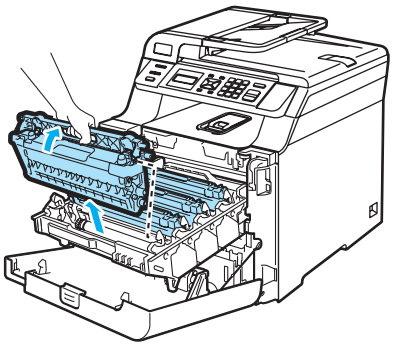

CAUTION

We recommend that you place the toner cartridges on a clean, flat surface with a piece of disposable paper underneath it in case you accidentally spill or scatter toner.

DO NOT put a toner cartridge into a fire. It could explode, resulting in injuries.

Handle the toner cartridges carefully. If toner scatters on your hands or clothes, wipe or wash it off with cold water at once.

To avoid print quality problems, DO NOT touch the shaded parts shown in the illustrations.

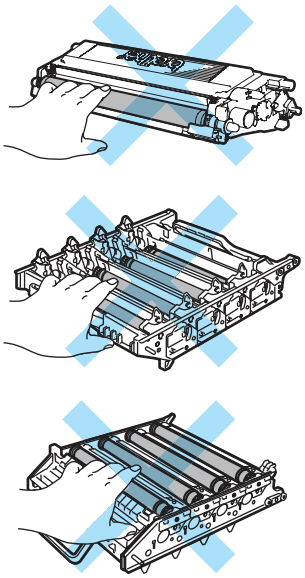

CAUTION

Brother strongly recommends that you do not refill the toner cartridges provided with your machine. We also strongly recommend that you continue to use only Genuine Brother Brand replacement toner cartridges. Use or attempted use of potentially incompatible toner and/or cartridges in the Brother machine may cause damage to the machine and/or may result in unsatisfactory print quality. Our warranty coverage does not apply to any problem that is caused by the use of unauthorized third party toner and/or cartridges. To protect your investment and obtain premium performance from the Brother machine, we strongly recommend the use of Genuine Brother Supplies.

Wait to unpack the toner cartridge until immediately before you put it in the machine. If a toner cartridge is left unpacked for a long time, the toner life will be shortened.

Note

- Be sure to seal up the toner cartridge tightly in a suitable bag so that toner powder does not spill out of the cartridge.
- Discard the used toner cartridge according to local regulations, keeping it separate from domestic waste. If you have questions, call your local waste disposal office.

CAUTION

DO NOT use flammable substances near the machine. DO NOT use any type of spray to clean the inside or outside of the machine. Doing this may cause a fire or electrical shock. Refer to *Routine maintenance* on page 81 for how to clean the machine.

4 Clean the corona wires as follows.

1 Push to release the latches of the white corona wire cover (1), and then open the cover.

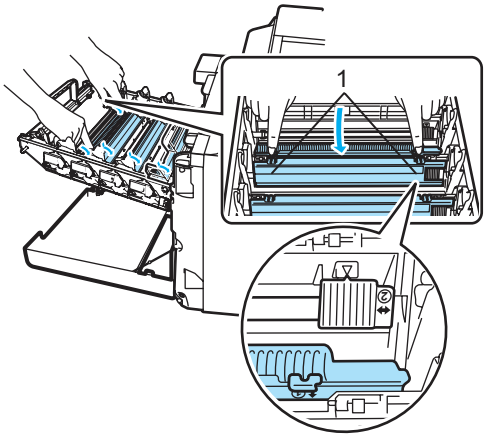

2 Clean the corona wire inside the drum unit by gently sliding the green tab from left to right and right to left several times.

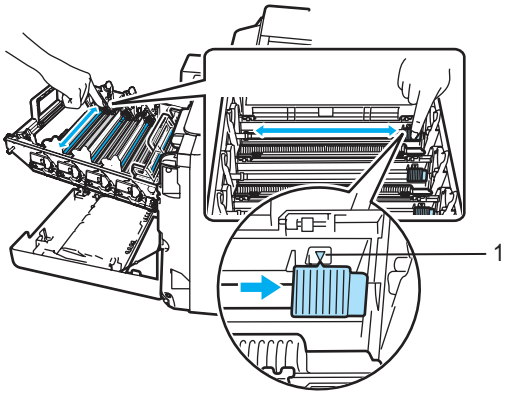

CAUTION

Be sure to return the tab to the home position (▼) (1). If you do not, printed pages may have a vertical stripe

3 Close the corona wire cover.

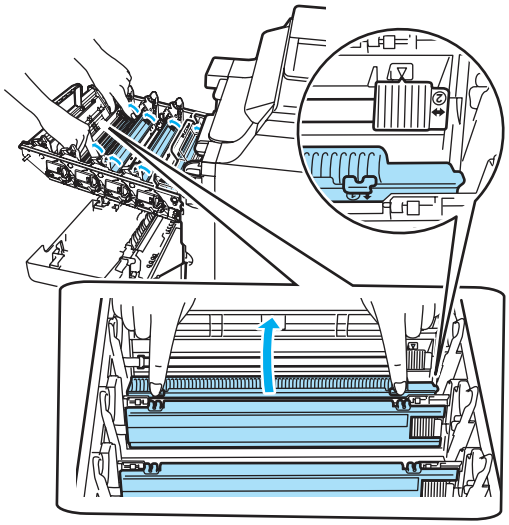

4 Repeat step **1** through step **3** to clean each of the remaining three corona wires.

5 Unpack the new toner cartridge. Hold the cartridge level with both hands and gently shake it from side to side five or six times to spread the toner evenly inside the cartridge.

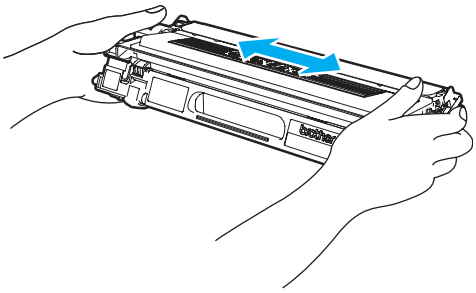

6 Remove the orange protective cover.

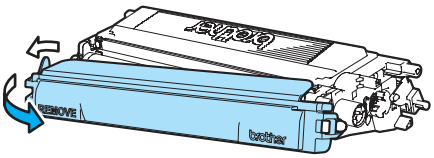

7 Hold the handle of the toner cartridge and slide the toner cartridge into the drum unit. Make sure that you match the toner cartridge color to the same color label on the drum unit, and make sure that you fold down the toner cartridge handle (A) once the toner cartridge is in place. Repeat this for all the toner cartridges.

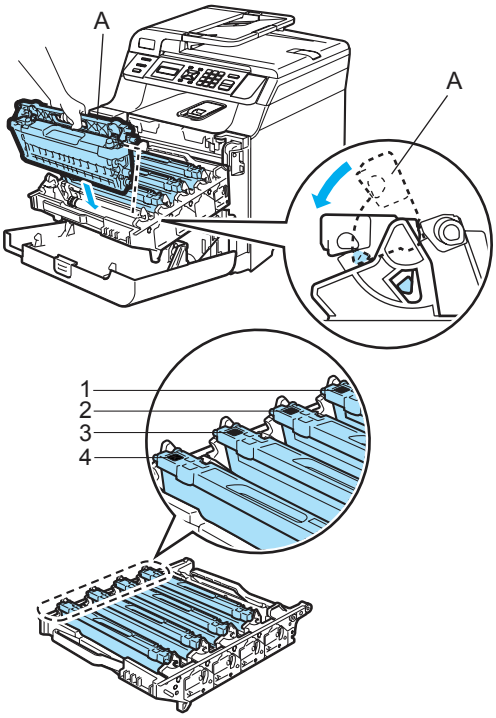

1 C - Cyan

2 M - Magenta

3 Y - Yellow

4 K - Black

8 Push the drum unit in until it stops.

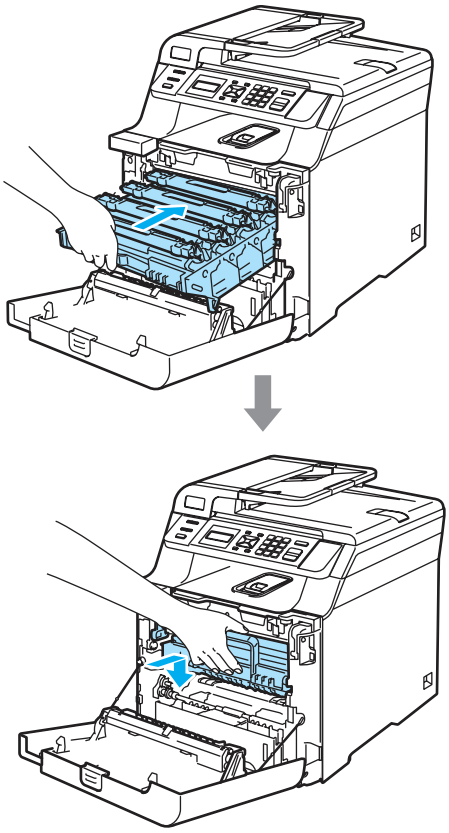

9 Close the front cover of the machine.

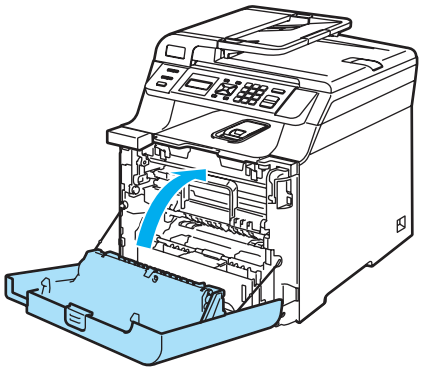

C

Replacing the drum unit

Order Number: DR-110CL

Drum end soon message

```
Drum End Soon
```

The machine uses a drum unit to create print images on paper. If the LCD shows `Drum End Soon`, the drum unit is near the end of its life and it is time to buy a new one.

Even if the LCD shows `Drum End Soon`, you may be able to continue printing without having to replace the drum unit for a while. However, if there is a noticeable deterioration in the output print quality (even before `Drum End Soon` appears), then the drum unit should be replaced. You should clean the machine when you replace the drum unit. (See *Cleaning the laser scanner windows* on page 83.)

CAUTION

While removing the drum unit, handle it carefully because it may contain toner. If toner scatters on your hands or clothes, wipe or wash it off with cold water at once.

Note

The drum unit is a consumable item, and it is necessary to replace it periodically. There are many factors that determine the actual drum life, such as temperature, humidity, type of paper and how much toner you use for the number of pages per print job. The estimated drum life is approximately 17,000 pages. The actual number of pages your drum will print may be significantly less than these estimates. Because we have no control over the many factors that determine the actual drum life, we cannot guarantee a minimum number of pages that will be printed by your drum.

Replacing the drum unit

CAUTION

Wait to unpack a new drum unit until immediately before installing it. Put the old drum unit into the plastic bag.

HOT SURFACE

After you have just used the machine, some internal parts of the machine will be extremely hot. When you open the front or back cover of the machine, DO NOT touch the shaded parts shown in the illustration.

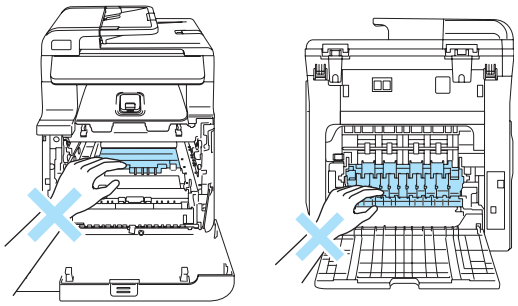

1 Turn off the machine's power switch. Press the front cover release button and then open the front cover.

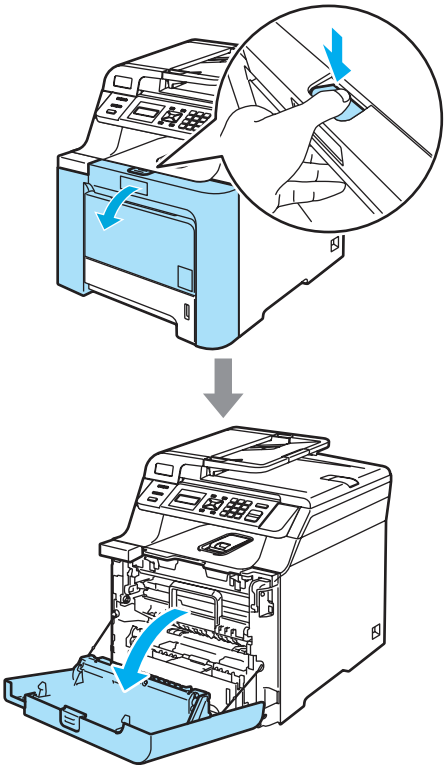

2 Hold the green handle of the drum unit. Lift the drum unit up and then pull it out until it stops.

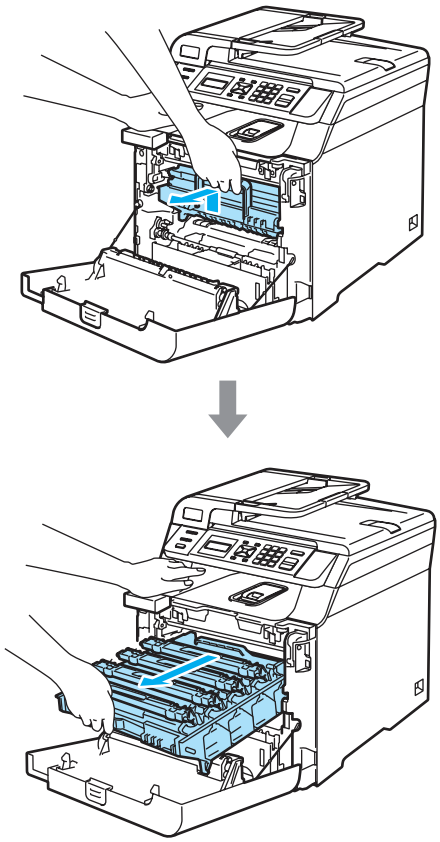

3 Release the gray lock lever (1) that is on the left side of the machine. Lift the front of the drum unit and pull the drum unit completely out of the machine using the green handles on the drum unit.

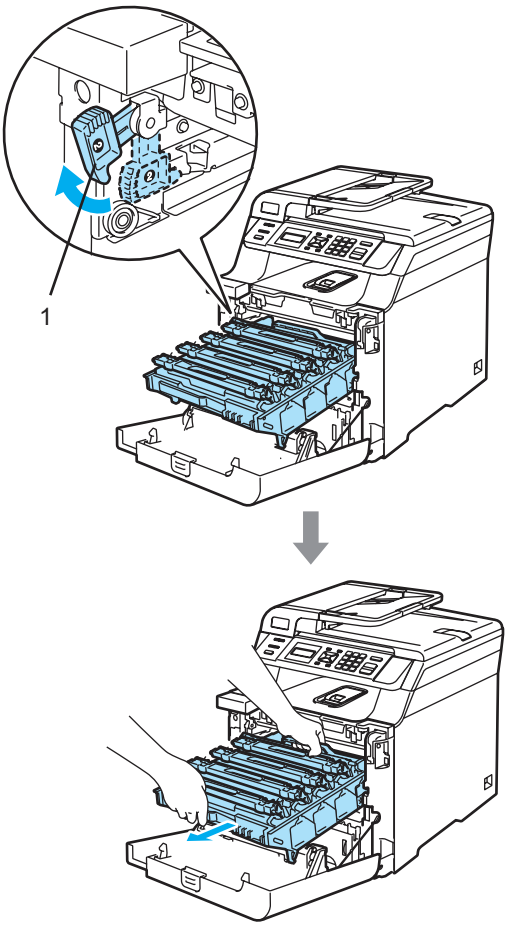

CAUTION

We recommend that you place the drum unit on a clean, flat surface with a piece of disposable paper underneath it in case you accidentally spill or scatter toner.

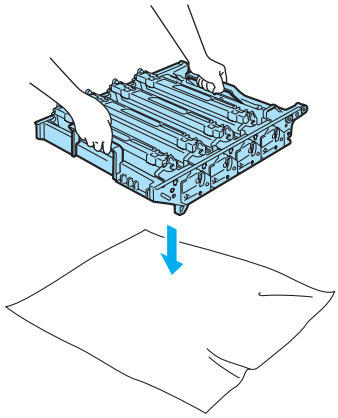

Note

Discard the used drum unit according to local regulations, keeping it separate from domestic waste. Be sure to seal up the drum unit tightly so that toner powder does not spill out of the unit. If you have questions, call your local waste disposal office.

CAUTION

To prevent damage to the machine from static electricity, DO NOT touch the electrodes shown in the illustration.

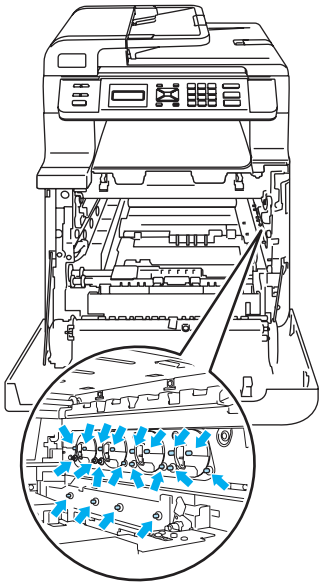

Hold the handles of drum unit when you carry it. DO NOT hold the sides of the drum unit.

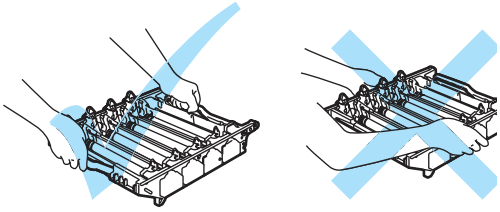

To avoid print quality problems, DO NOT touch the shaded parts shown in the illustrations.

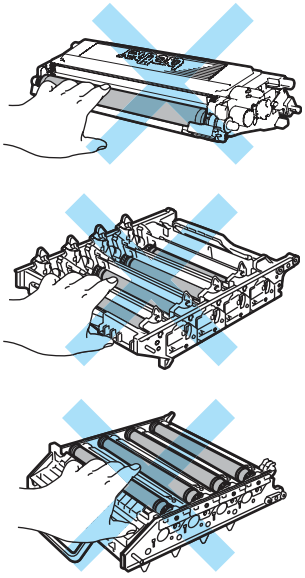

4 Hold the handle of the toner cartridge and pull it out of the drum unit. Repeat this for all the toner cartridges.

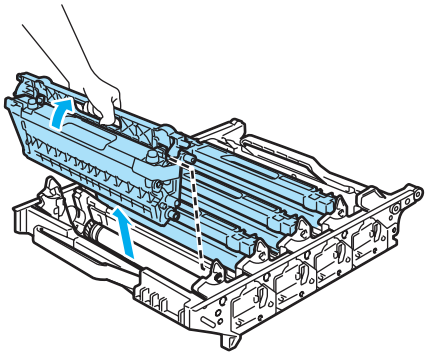

C

CAUTION

We recommend that you place the toner cartridges on a clean, flat surface with a piece of disposable paper underneath them in case you accidentally spill or scatter toner.

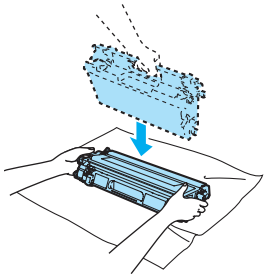

Handle the toner cartridge carefully. If toner scatters on your hands or clothes, wipe or wash it off with cold water at once.

5 Unpack the new drum unit and remove the protective cover.

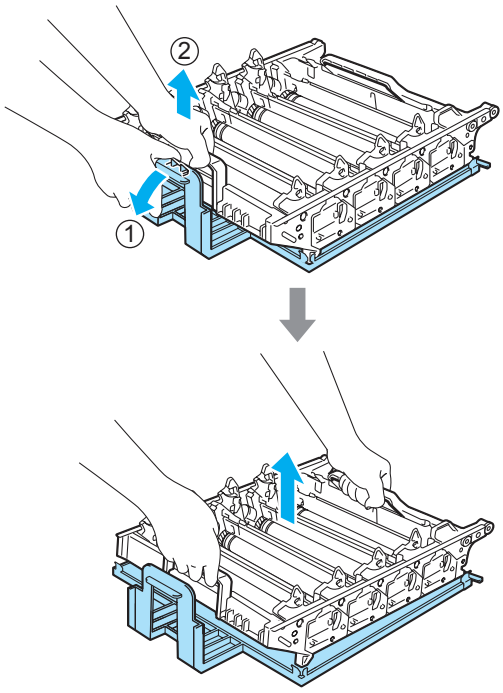

6 Hold the handle of the toner cartridge and slide the toner cartridge into the drum unit. Make sure that you match the toner cartridge color to the same color label on the drum unit, and make sure that you fold down the toner cartridge handle (A) once the toner cartridge is in place. Repeat this for all the toner cartridges.

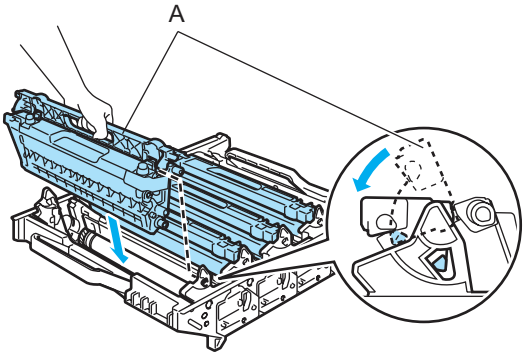

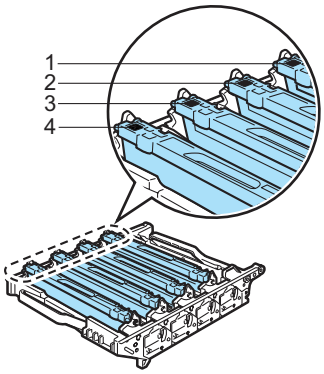

1 C - Cyan

2 M - Magenta

3 Y - Yellow

4 K - Black

7 Put the drum unit back in the machine as follows.

1 Make sure that the gray lock lever (1) is in the up position and put the drum unit in the machine. Push down the gray lock lever (1).

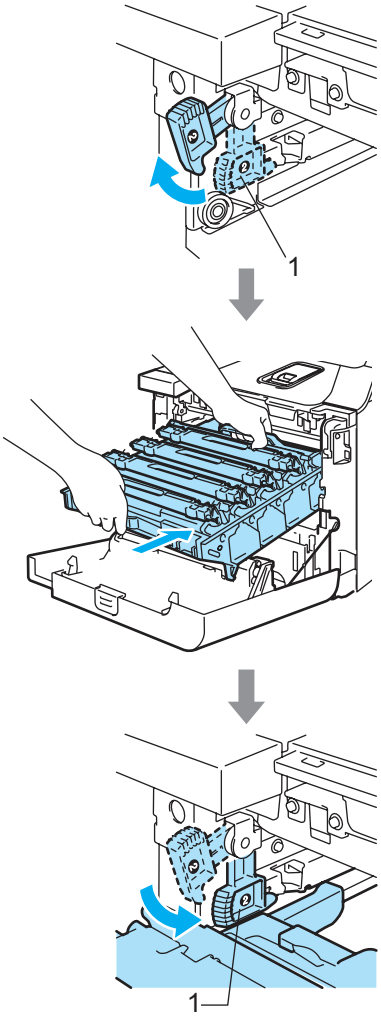

Note

When you put the drum unit in the machine, match the green guides (1) of the drum unit handle to the green arrows (2) on both sides of the machine.

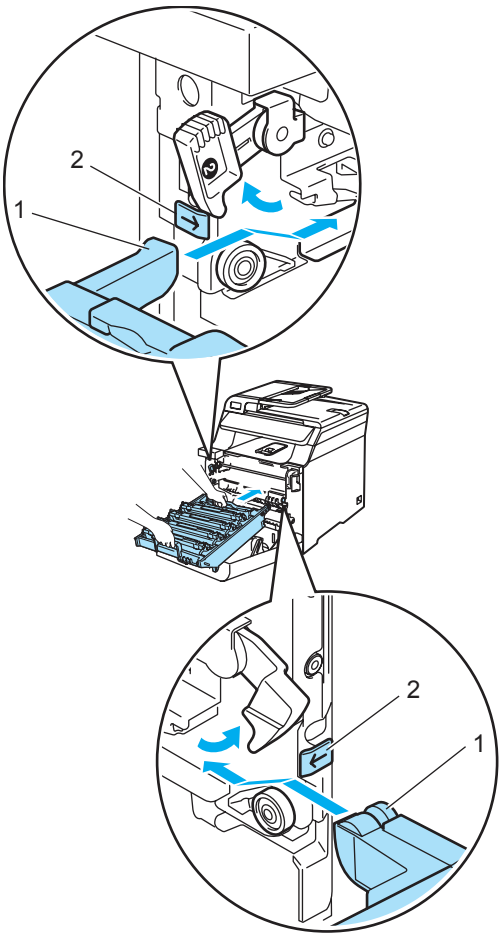

C

2 Push the drum unit in until it stops.

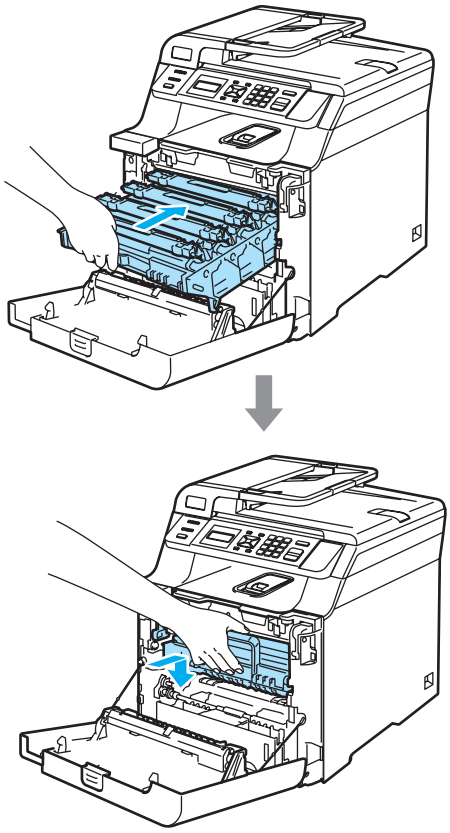

8 Close the front cover of the machine.

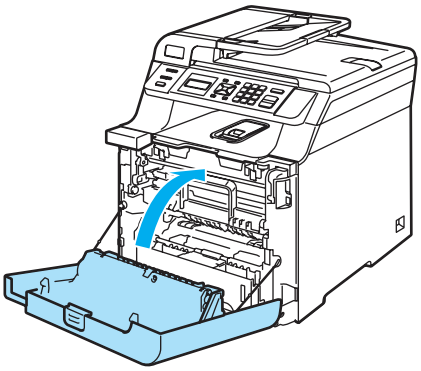

When you replace the drum unit with a new one, you need to reset the drum unit counter by completing the following steps:

9 Turn on the machine's power switch.

10 Press **Menu**, **5**, **5**.
The LCD shows the part name of the counter that needs to be reset.

```
Machine Info.
5.Reset Menu
```

11 Press ▲ or ▼ to choose `Drum`.
Press **OK**.

12 Press **1** to reset the drum unit counter.

13 Press **Stop/Exit**.

Replacing the belt unit

Order Number: BU-100CL

Change Belt Unit message

When the belt unit runs out, the following message appears on the LCD. When you see this message, you must replace the belt unit:

```
Change Belt Unit
```

CAUTION

DO NOT touch the surface of the belt unit. If you touch it, it could degrade print quality.

Damage caused by improper handling of the belt unit may void your warranty.

Replacing the belt unit

1. Turn off the machine's power switch. Press the front cover release button and then open the front cover.

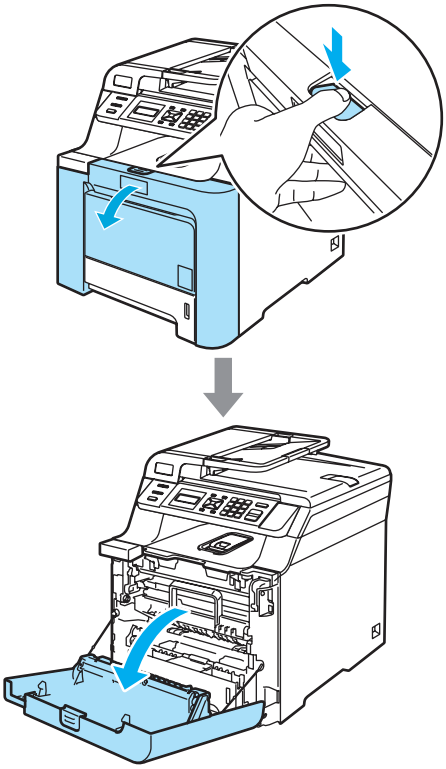

2. Hold the green handle of the drum unit. Lift the drum unit up and then pull it out until it stops.

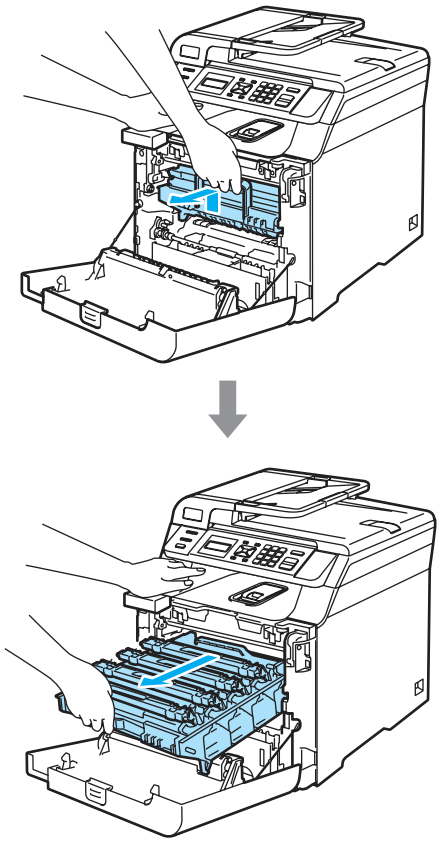

C

3 Release the gray lock lever (1) that is on the left side of the machine. Lift the front of the drum unit and pull the drum unit completely out of the machine using the green handles on the drum unit.

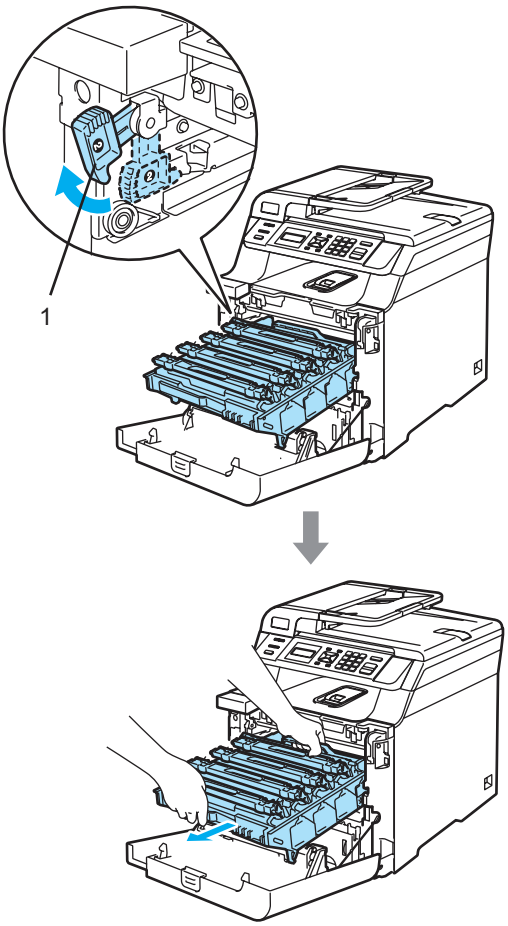

CAUTION

Hold the handles of drum unit when you carry it. DO NOT hold the sides of the drum unit.

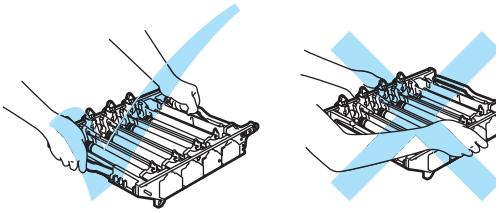

We recommend that you place the drum unit on a clean, flat surface with a piece of disposable paper underneath it in case you accidentally spill or scatter toner.

To prevent damage to the machine from static electricity, DO NOT touch the electrodes shown in the illustration.

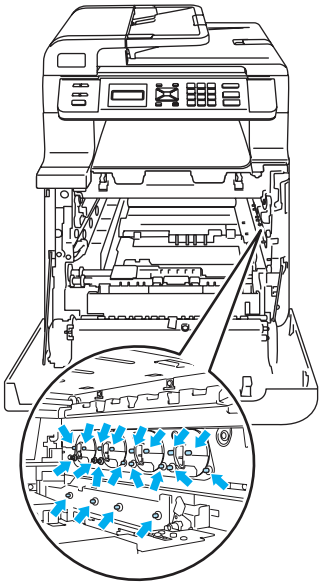

4 Hold the green parts of the belt unit with both hands and lift the belt unit up, then pull it out.

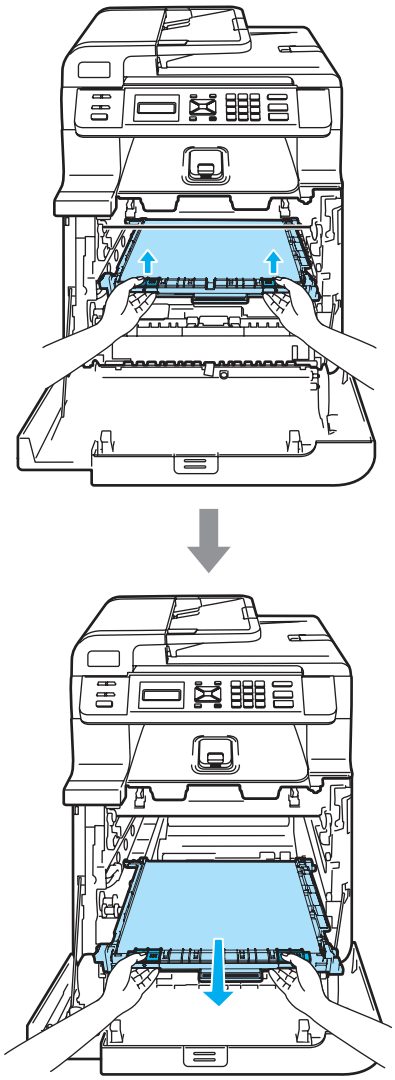

CAUTION

We recommend that you place the belt unit on a clean, flat surface with a piece of disposable paper underneath it in case you accidentally spill or scatter toner.

5 Unpack the new belt unit, and remove the protective cover and paper.

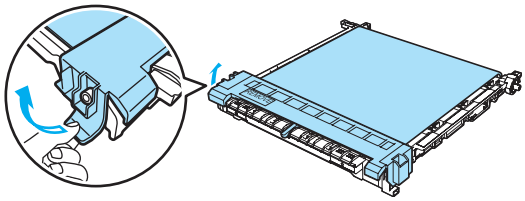

6 Put the new belt unit in the machine. Match the ↓ mark on the belt unit to the ↑ mark on the machine. Push down on the green area of the belt unit to lock it in place.

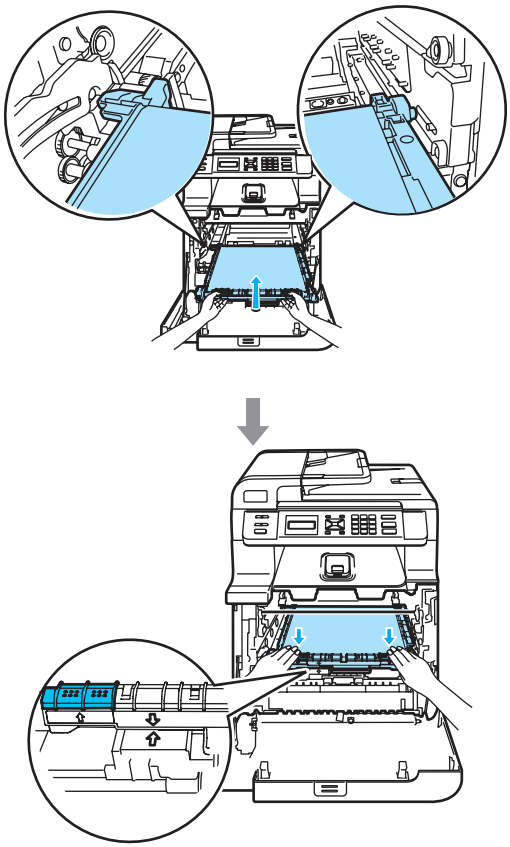

C

7 Put the drum unit back in the machine as follows.

1 Make sure that the gray lock lever (1) is in the up position and put the drum unit in the machine. Push down the gray lock lever (1).

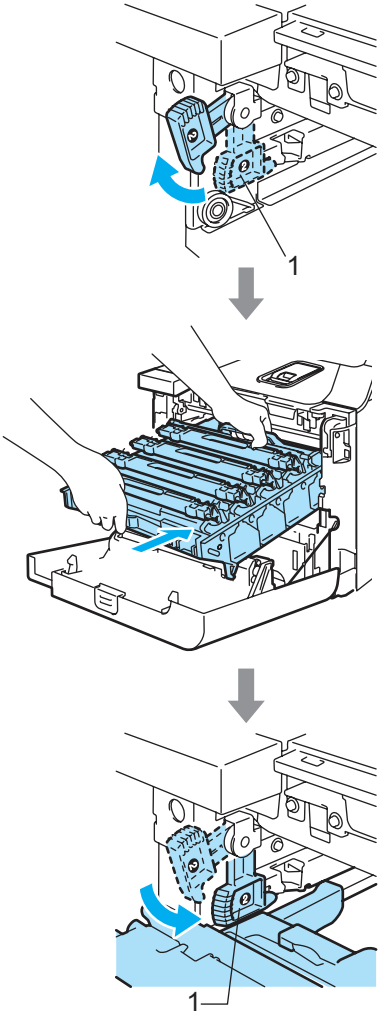

Note

When you put the drum unit in the machine, match the green guides (1) of the drum unit handle to the green arrows (2) on both sides of the machine.

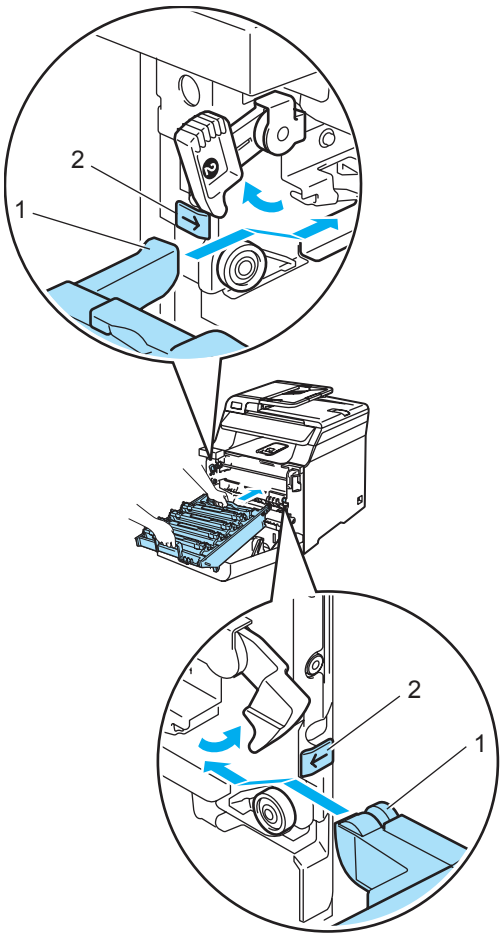

2 Push the drum unit in until it stops.

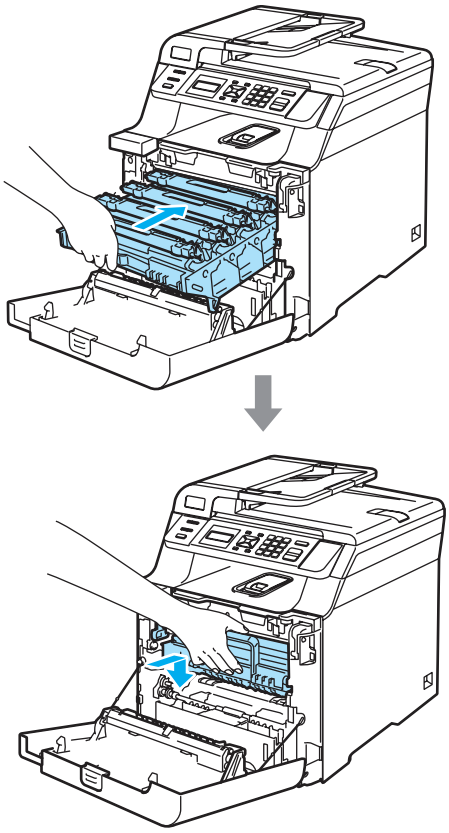

8 Close the front cover of the machine.

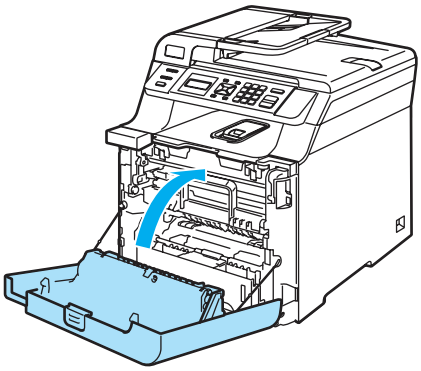

When you replace the belt unit with a new one, you need to reset the belt unit counter by completing the following steps:

9 Turn on the machine's power switch.

10 Press **Menu**, **5**, **5**.
The LCD shows the part name of the counter that needs to be reset.

```
Machine Info.
5.Reset Menu
```

11 Press ▲ or ▼ to choose `Belt Unit`.
Press **OK**.

12 Press **1** to reset the belt unit counter.

13 Press **Stop/Exit**.

Replacing the waste toner box

Order Number: WT-100CL

Change waste toner soon message

After you have printed approximately 20,000 images at 5% coverage for CMYK each, you must change the waste toner box. The actual number of printed pages will vary depending on the print jobs and paper you use.

```
Waste Toner Soon
```

Waste Toner Box Full message

When the waste toner box is full, the following message appears on the LCD and the machine will stop printing. When you see this message, you must replace the toner box:

```
Waste Toner Full
```

C

Replacing the waste toner box

WARNING

DO NOT reuse the waste toner box.

DO NOT put the waste toner box into a fire. It could explode, resulting in injuries.

Be careful not to spill the toner. DO NOT inhale or allow it to get into your eyes.

CAUTION

Handle the waste toner box carefully. If toner scatters on your hands or clothes, wipe or wash it off with cold water at once.

1. Press the front cover release button and then open the front cover.

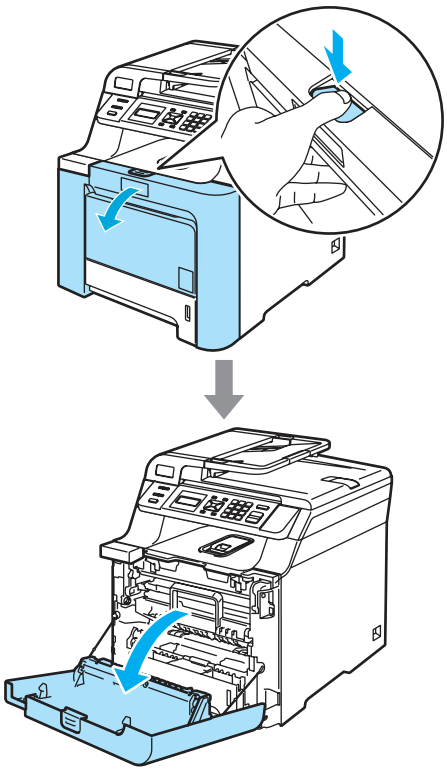

2. Hold the green handle of the drum unit. Lift the drum unit up and then pull it out until it stops.

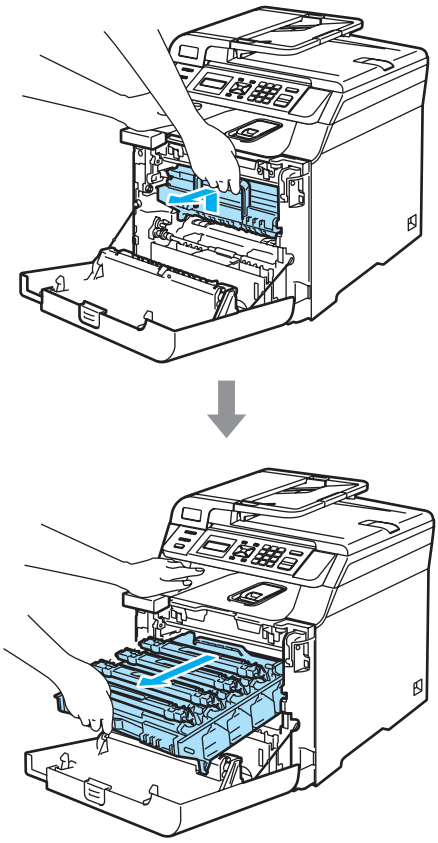

3 Release the gray lock lever (1) that is on the left side of the machine. Lift the front of the drum unit and pull the drum unit completely out of the machine using the green handles on the drum unit.

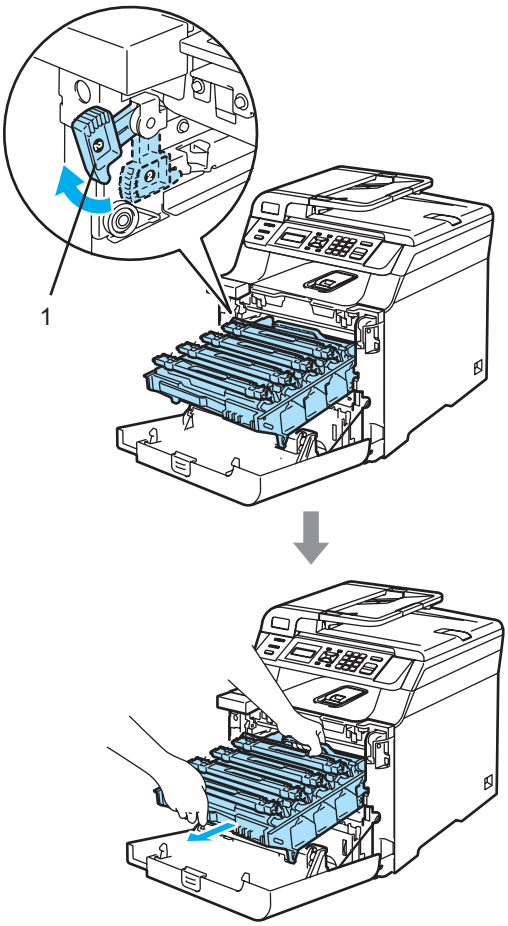

CAUTION

Hold the handles of drum unit when you carry it. DO NOT hold the sides of the drum unit.

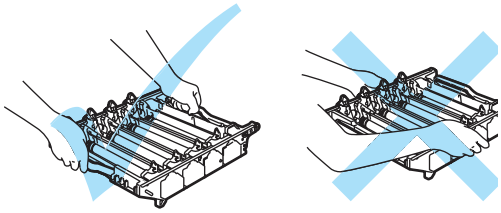

We recommend that you place the drum unit on a clean, flat surface with a piece of disposable paper underneath it in case you accidentally spill or scatter toner.

If toner scatters on your hands or clothes, wipe or wash it off with cold water at once.

To prevent damage to the machine from static electricity, DO NOT touch the electrodes shown in the illustration.

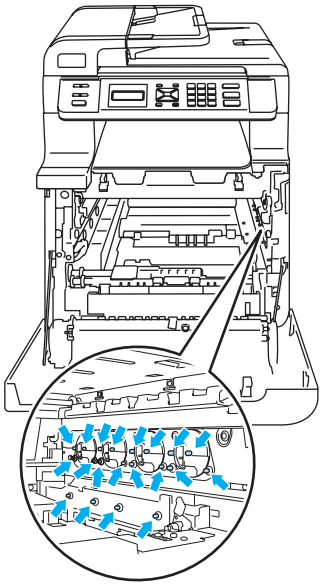

C

4 Hold the green parts of the belt unit with both hands and lift the belt unit up, then pull it out.

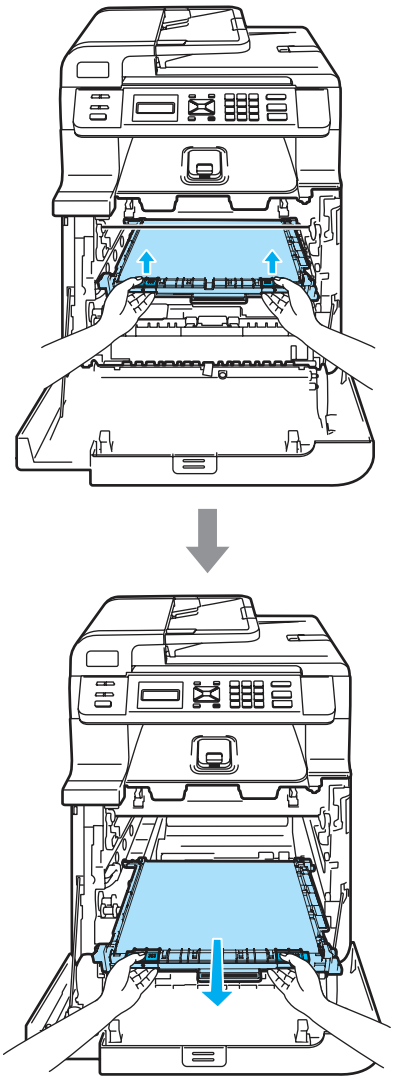

CAUTION

We recommend that you place the belt unit on a clean, flat surface with a piece of disposable paper underneath it in case you accidentally spill or scatter toner.

5 Remove the waste toner box from the machine using the green handle.

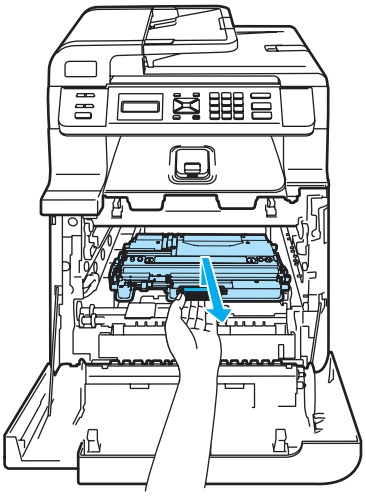

Note

Discard the used waste toner box according to local regulations, keeping it separate from domestic waste. If you have questions, call your local waste disposable office.

6 Unpack the new waste toner box and put the new one in the machine using the green handle.

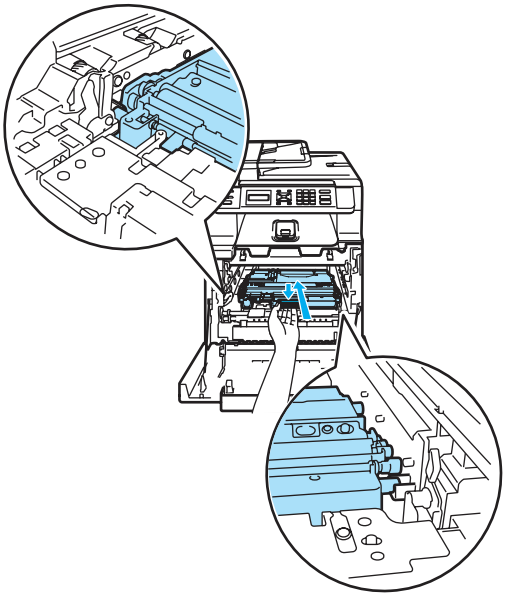

7 Put the belt unit back in the machine. Match the ↓ mark on the belt unit to the ↑ mark on the machine. Push down on the green area of the belt unit to lock it in place.

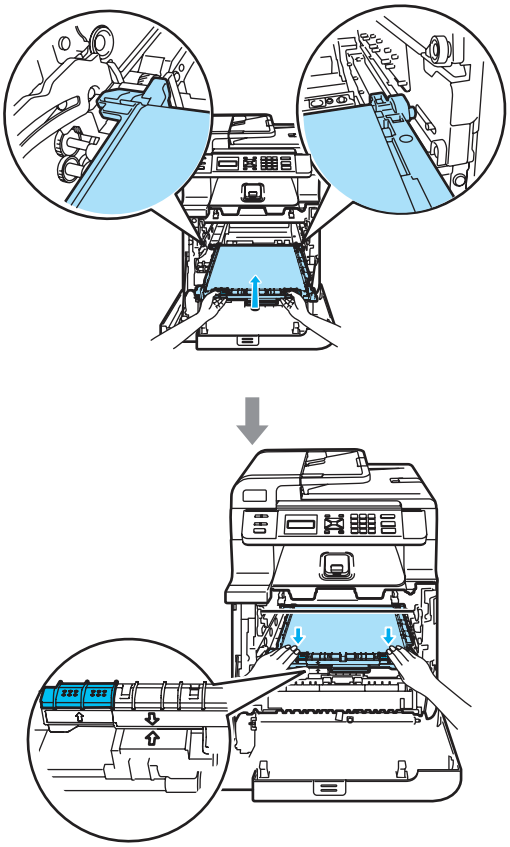

8 Put the drum unit back in the machine as follows.

1 Make sure that the gray lock lever (1) is in the up position and put the drum unit in the machine. Push down the gray lock lever (1).

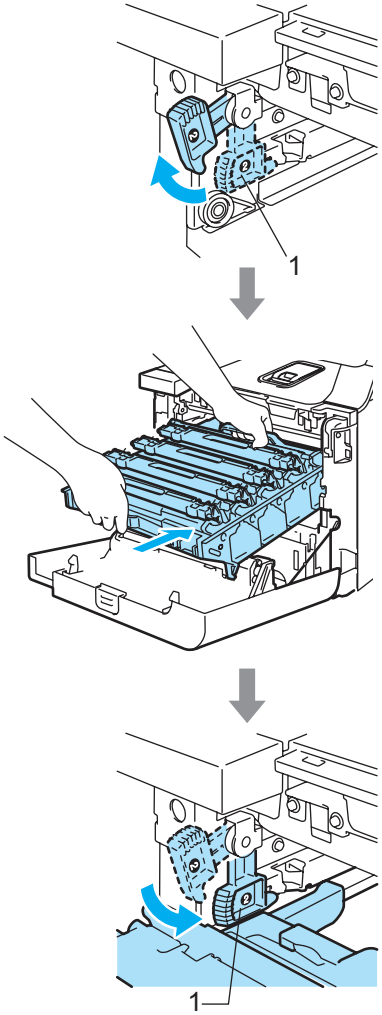

C

Note

When you put the drum unit in the machine, match the green guides (1) of the drum unit handle to the green arrows (2) on both sides of the machine.

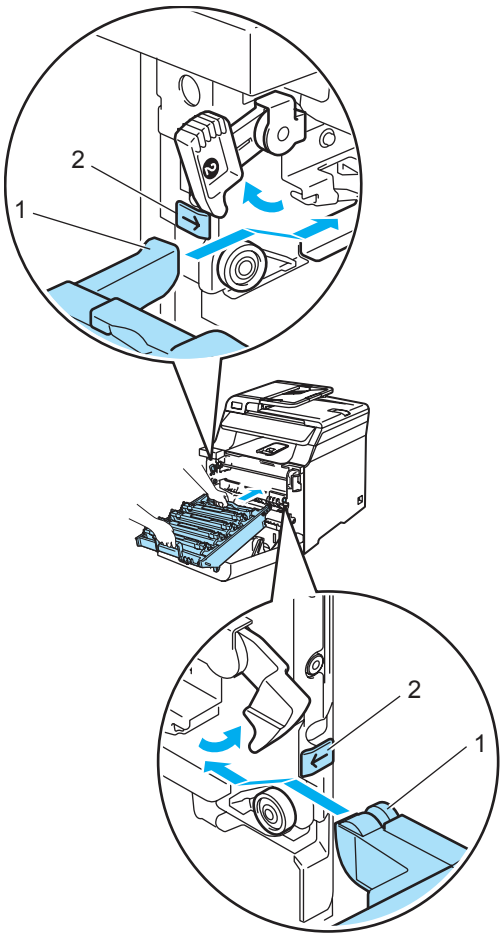

2 Push the drum unit in until it stops.

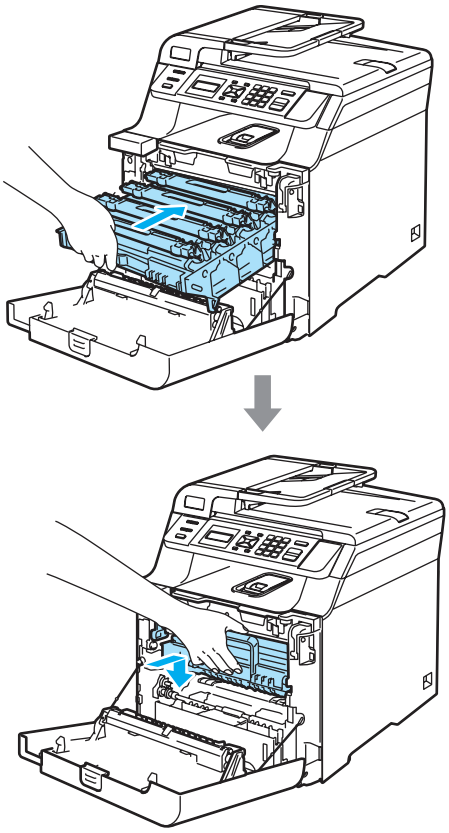

9 Close the front cover of the machine.

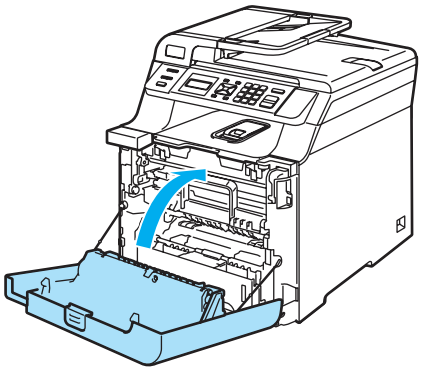

Packing and shipping the machine

If for any reason you must move or ship your machine, carefully re-pack the machine in the original packing material to avoid any damage during transport. If you do not pack the machine properly, you could void your warranty. The machine should be adequately insured with the carrier.

If the machine must be shipped, please read the instructions in this section which explains how to properly prepare your machine for transport.

WARNING

Once your machine has been set up and used, we do not recommend that it be moved or shipped unless absolutely necessary.

Color laser printers are complex printing devices. Moving the machine or shipping it without properly removing the installed supplies can result in SEVERE damage to the machine. As a result, your machine may not operate properly afterwards.

Failure to properly prepare the machine for shipping according to the instructions in this section may

VOID YOUR WARRANTY.

To prevent injuries when moving or lifting this machine, make sure at least two people lift the machine together. Be careful not to pinch your fingers when you put the machine down.

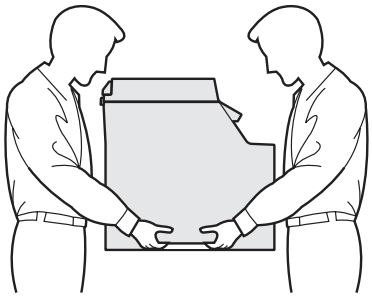

Make sure that you have the following parts for repacking:

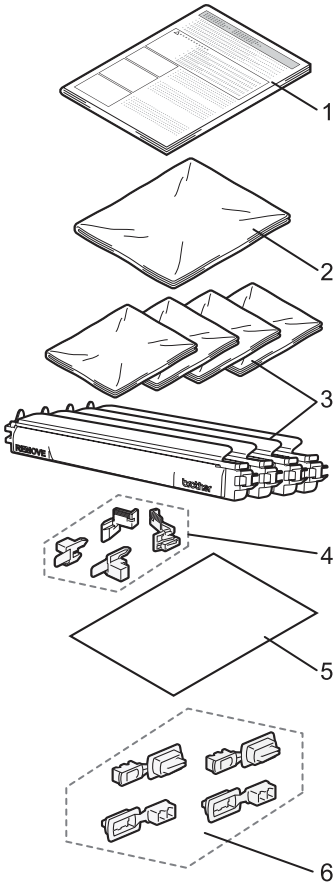

1 **Insertion sheet for repacking**

2 **Plastic bag for the waste toner box**

3 **Orange protective cover and plastic bag that the toner cartridge originally came in (4 pieces of each)**

4 **Orange packing material for locking the drum unit and the belt unit (4 pieces)**

5 **A piece of paper (Letter or A4) to protect the belt unit (supplied by the user)**

6 **Joints for attaching cartons (4 pieces)**

C

Repacking the machine

1. Turn off the machine's power switch, and unplug all the cables from the machine. Unplug the power cord from the AC power outlet.

2. Press the front cover release button and then open the front cover.

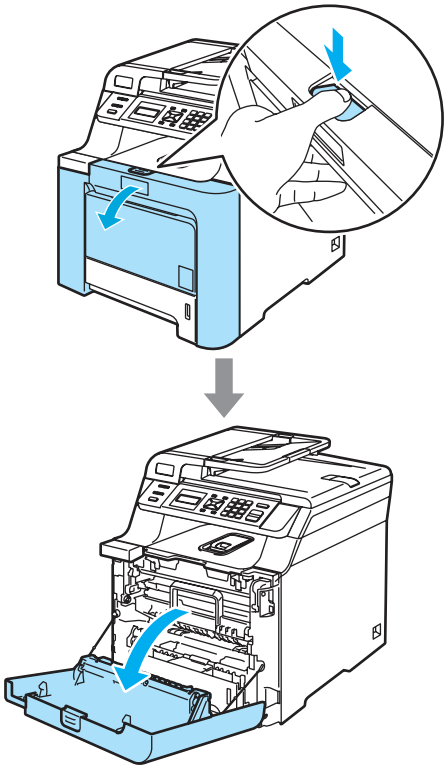

3. Hold the green handle of the drum unit. Lift the drum unit up and then pull it out until it stops.

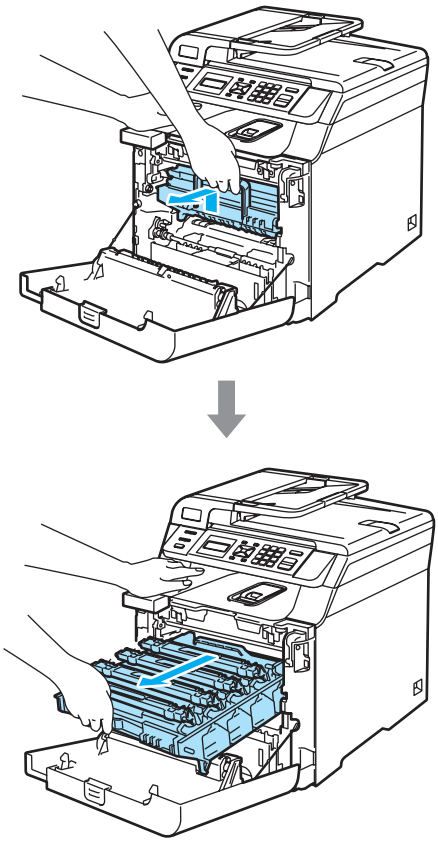

4 Release the gray lock lever (1) that is on the left side of the machine. Lift the front of the drum unit and pull the drum unit completely out of the machine using the green handles on the drum unit.

CAUTION

Hold the handles of the drum unit when you carry it. DO NOT hold the sides of the drum unit.

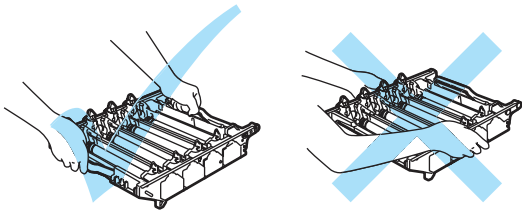

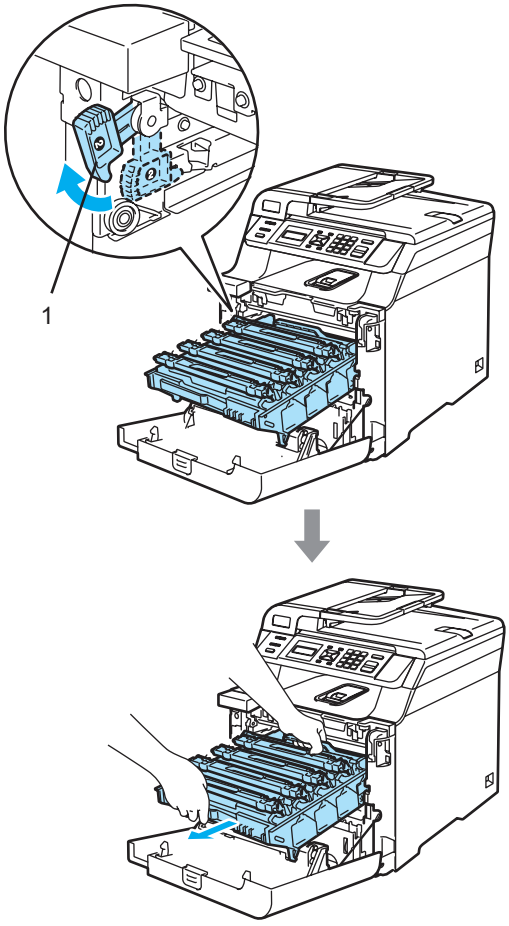

CAUTION

We recommend that you place the drum unit on a clean, flat surface with a piece of disposable paper underneath it in case you accidentally spill or scatter toner.

5 Hold the handle of the toner cartridge and pull it out of the drum unit. Repeat this for all of the toner cartridges.

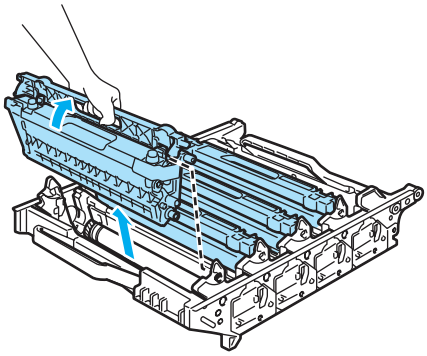

CAUTION

We recommend that you place the toner cartridges on a clean, flat surface with a piece of disposable paper underneath them in case you accidentally spill or scatter toner.

6 Attach the original orange protective cover to each of the toner cartridges. Place each of the toner cartridges into the plastic bag that the cartridge originally came in.

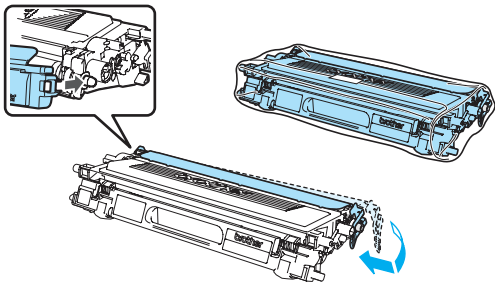

C

7 Hold the green parts of the belt unit with both hands and lift the belt unit up, then pull it out.

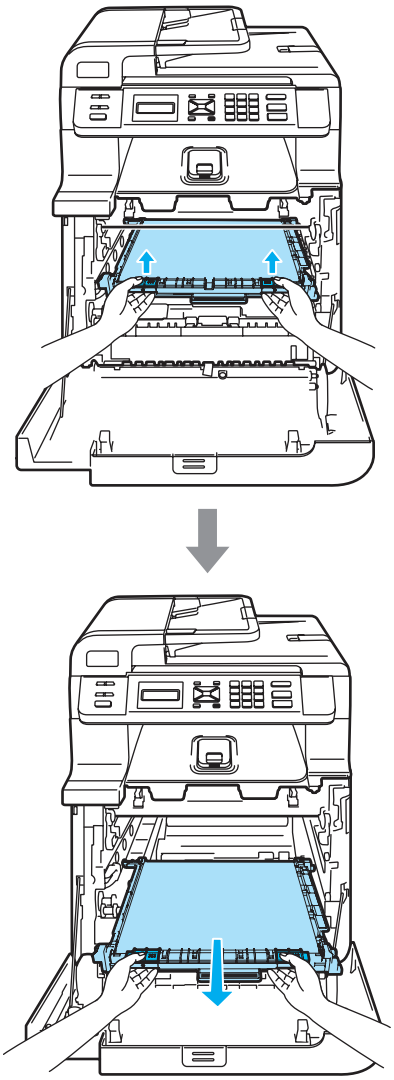

CAUTION

We recommend that you place the belt unit on a clean, flat surface with a piece of disposable paper underneath it in case you accidentally spill or scatter toner.

8 Remove the waste toner box from the machine using the green handle and place it into the plastic bag included in the carton.

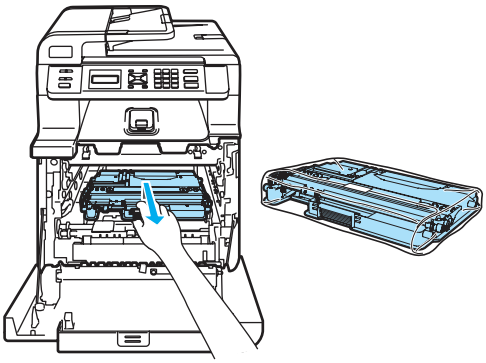

9 Put the belt unit back in the machine. Match the ↓ mark on the belt unit to the ↑ mark on the machine. Push down on the green area of the belt unit to lock it in place.

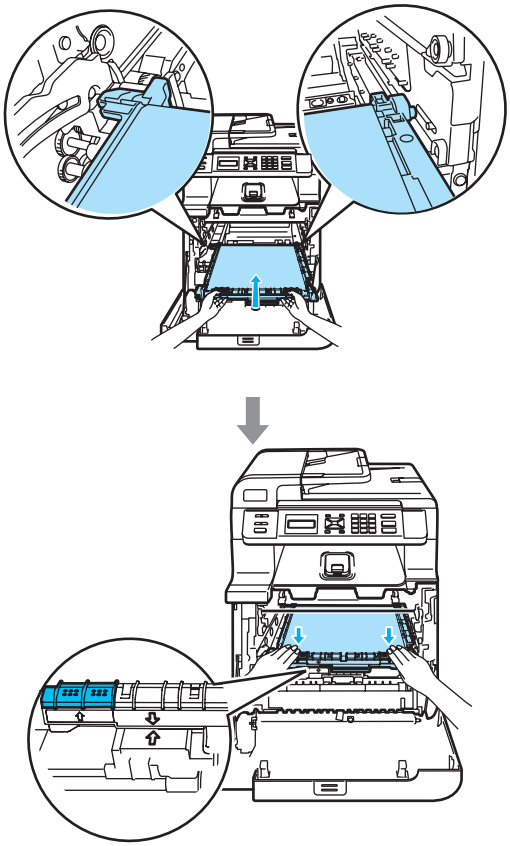

10 Insert the original orange packing material for locking the belt unit as shown in the illustration.

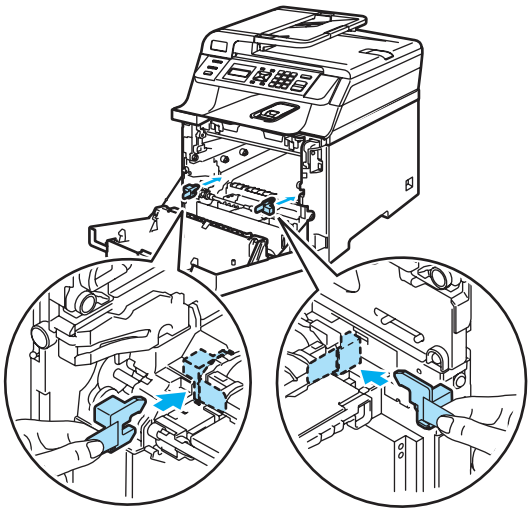

11 Put a piece of paper (letter or A4) on the belt unit to prevent damage to the belt unit.

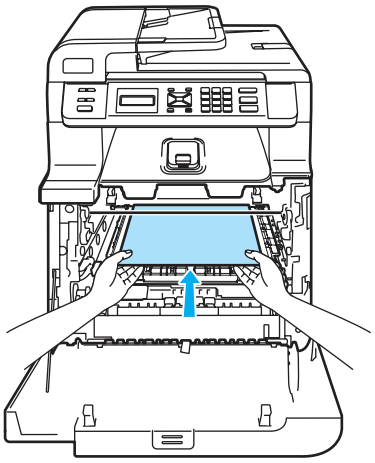

12 Put the drum unit back in the machine as follows.

1 Make sure that the gray lock lever (1) is in the up position and put the drum unit in the machine. Push down the gray lock lever (1).

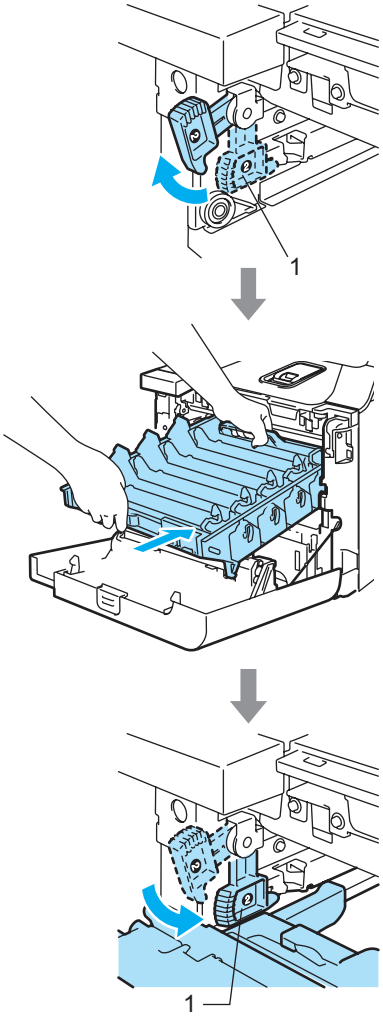

C

Note

When you put the drum unit in the machine, match the green guides (1) of the drum unit handle to the green arrows (2) on both sides of the machine.

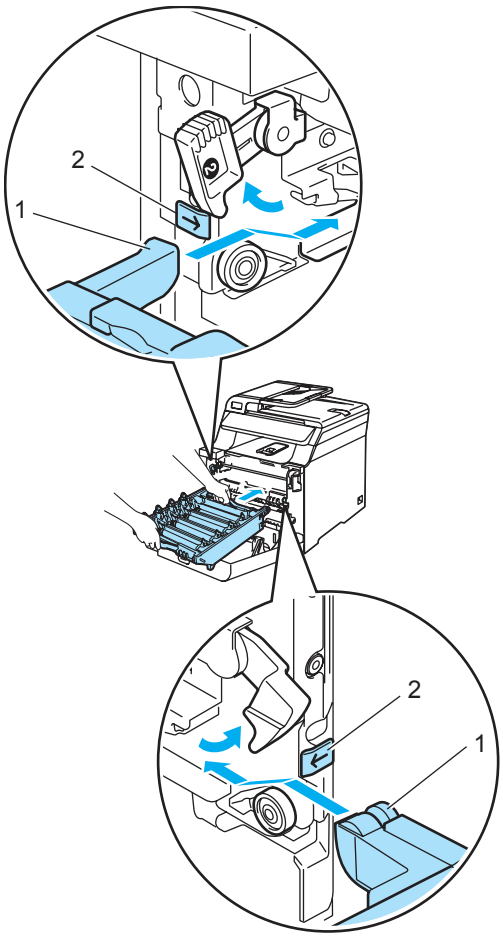

2 Push the drum unit back in until it stops.

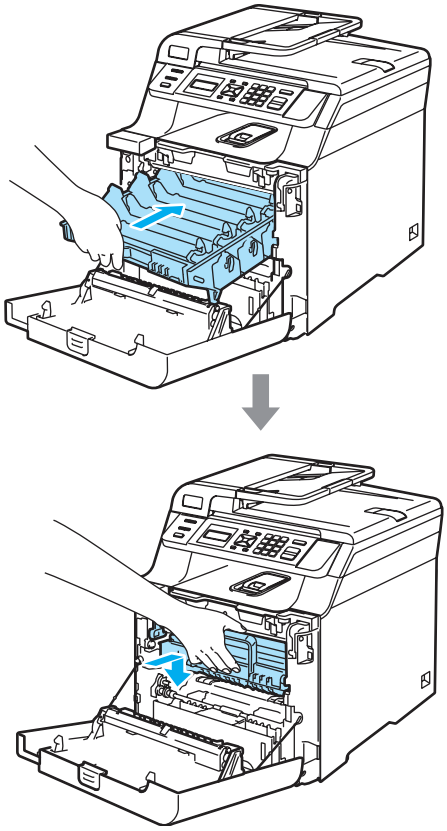

13 Insert the original orange packing material for the drum unit until as shown in the illustration, and then close the front cover.

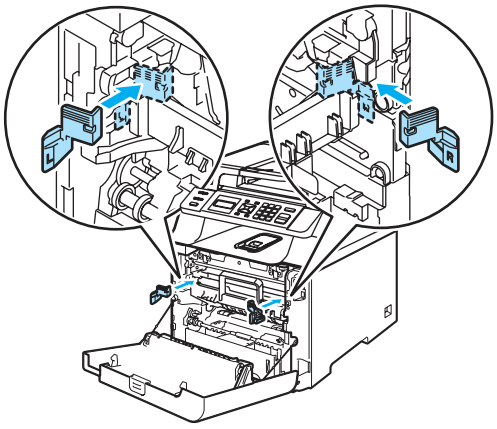

14 Two people should place the machine into the plastic bag and put the machine on the styrofoam pieces (1) in the lower carton (2). Put the upper carton (3) over the machine and the lower carton.
Match the joint holes (4) of the upper carton to the joint holes (5) of the lower carton.

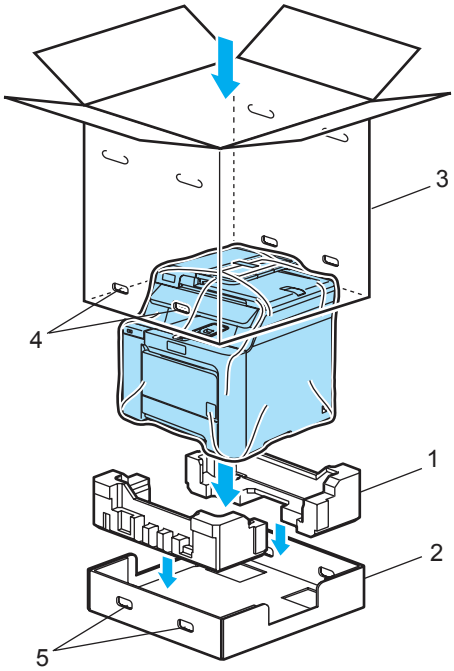

15 Put the two styrofoam pieces for the toner cartridges on the top of the machine. Match the right side of the machine to the “R” mark on one of the styrofoam pieces (1), and the left side of the machine to the “L” mark on the other styrofoam piece (2).
Put the toner cartridges in the styrofoam.

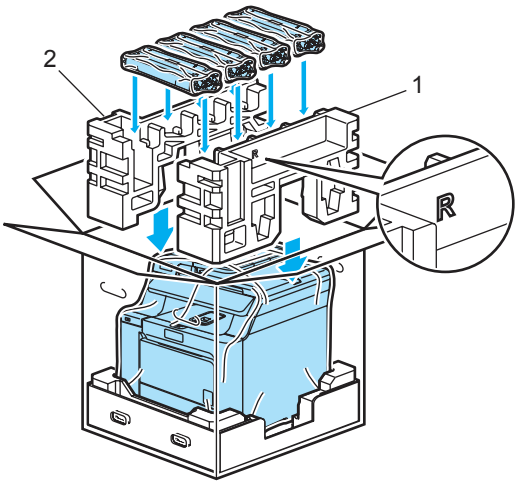

16 Put the carton tray (1) on the top.
Match the front side of the machine to the Δ marks on the carton tray.
Place the waste toner box in the right side of the carton tray.

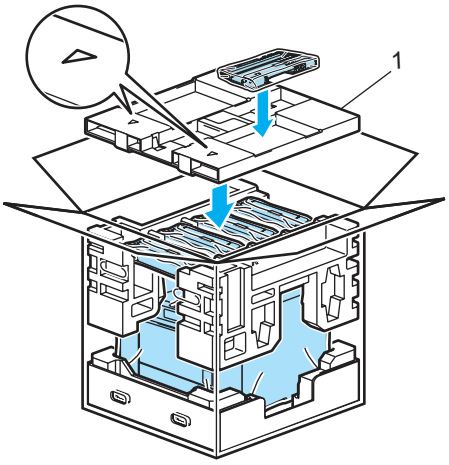

C

17 Put the four joints (1) into the holes of the carton using steps A and B as shown below.

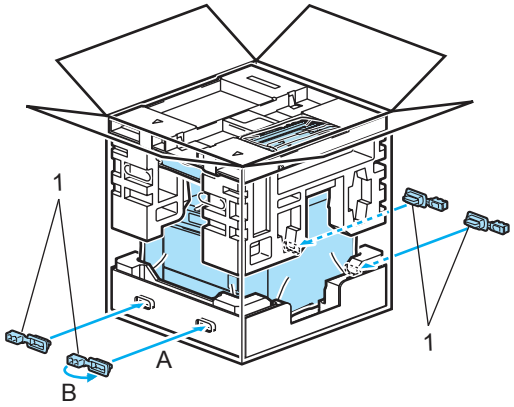

18 Close the carton and tape it shut.

Machine information

Checking the serial number

You can see the machine's serial number on the LCD.

1 Press **Menu**, **5**, **1**.

```
Machine Info.
1.Serial No.
```

2 Press **Stop/Exit**.

Checking the page counters

You can see the machine's page counters for printed pages, copies, reports and lists or a summary total.

1 Press **Menu**, **5**, **2**.

```
Machine Info.
2.Page Counter
```

2 Press ▲ or ▼ to choose `Total`, `List`, `Copy` or `Print`.

```
Page Counter
Total     :XXXXXX
```

```
Page Counter
List      :XXXXXX
```

```
Page Counter
Copy      :XXXXXX
```

```
Page Counter
Print     :XXXXXX
```

3 Press **OK**.
You can see the machine's page counters for color and black & white.

```
Color     :XXXXXX
B&W       :XXXXXX
```

4 Press **Stop/Exit**.

Checking the remaining life of parts

You can view the remaining life of these parts on the LCD.

1. Press **Menu**, **5**, **4**.

```
Machine Info.
4.Parts Life
```

2. Press ▲ or ▼ to choose `1.Drum`, `2.Belt Unit`, `3.PF Kit MP`, `4.PF Kit 1`, `5.Fuser` or `6.Laser`. Press **OK**.

```
Drum
Remaining: XX%
```

3. Press **Stop/Exit**.

Note

The life check of a part will be accurate only if that part's life counter was reset when the new part was installed. It will not be accurate if that part's life counter was reset during the life of the used part.

D Menu and features

On-screen programming

Your machine has been designed to be easy to use. The LCD provides on-screen programming using the menu keys.

We have created step by step on-screen instructions to help you program your machine. Simply follow the steps as they guide you through the menu selections and programming options.

Menu table

You can program your machine by using the *Menu table* on page 134. These pages list the menu selections and options.

Press **Menu** followed by the menu numbers to program your machine.

For example, to set `Beeper` volume to `Low`:

1. Press **Menu**, **1**, **3**.
2. Press ▲ or ▼ to choose `Low`.
3. Press **OK**.

Memory storage

Your menu settings are stored permanently, and in the event of a power failure will *not* be lost. Temporary settings (for example, Contrast) *will* be lost.

Menu keys

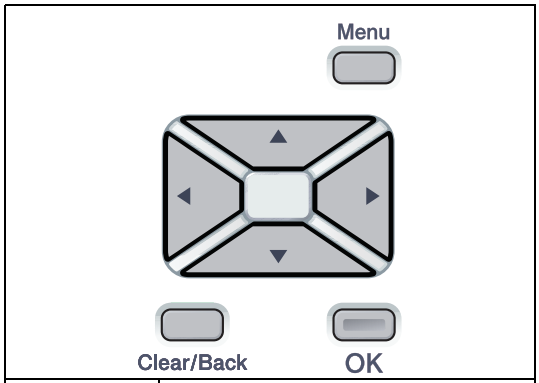

Menu	Access the menu.
OK	Go to the next menu level. Accept an option.
Clear/Back	Exit the menu by pressing repeatedly. Go back to the previous menu level.
▲ ▼	Scroll through the current menu level.
◀ ▶	Go back to the previous menu level or forward to the next menu level.
Stop/Exit	Exit the menu.

How to access the menu mode

1. Press **Menu**.
2. Choose an option.
   - Press **1** for General Setup menu.
   - Press **2** for Copy menu.
   - Press **3** for Printer menu.
   - Press **4** for LAN menu.
   - Press **5** for Machine Info. menu.

   You can also scroll through each menu level by pressing ▲ or ▼ for the direction you want.
3. Press **OK**.
   The LCD will then show the next menu level.
4. Press ▲ or ▼ to scroll to your next menu selection.
5. Press **OK**.
   When you have finished setting an option, the LCD shows `Accepted`.
6. Press **Stop/Exit** to return to the top menu.

Menu table

The factory settings are shown in Bold with an asterisk.

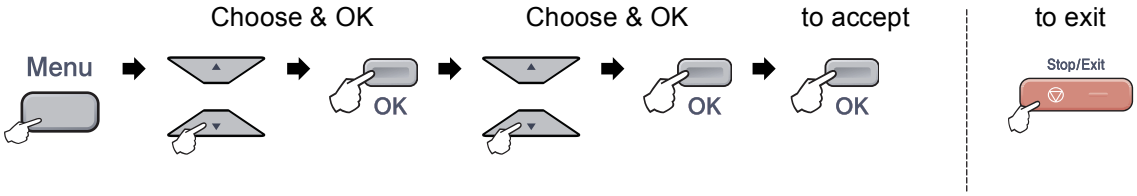

Main Menu	Submenu	Menu Selections	Options	Descriptions	Page
1.General Setup	1.Paper Type	1.MP Tray	Thin **Plain*** Thick Thicker Recycled Paper	Sets the type of paper in the MP tray.	21
		2.Tray#1	Thin **Plain*** Recycled Paper	Sets the type of paper in the paper tray.	21
	2.Paper Size	1.MP Tray	A4 **Letter*** Legal Executive A5 A6 B5 B6 Folio Any	Sets the size of the paper in the multi-purpose tray.	21
		2.Tray#1	A4 **Letter*** Legal Executive A5 A6 B5 B6 Folio	Sets the size of the paper in the paper tray.	21

Main Menu	Submenu	Menu Selections	Options	Descriptions	Page
1.General Setup (continued)	3.Beeper	—	Off Low **Med*** High	Adjusts the volume level of the beeper.	22
	4.Ecology	1.Toner Save	On **Off***	Increases the page yield of the toner cartridge.	23
		2.Sleep Time	(000-240) **005Min***	Conserves power.	23
	5.Tray Use	1.Copy	Tray#1 Only MP Only **MP>T1*** T1>MP	Selects the tray that will be used for Copy mode.	22
		2.Print	Tray#1 Only MP Only **MP>T1*** T1>MP	Selects the tray that will be used for PC print.	22
	6.LCD Contrast	—	▼ -□□□□■+ ▲ ▼ -□□□■□+ ▲ ▼ **-□□■□□+ ▲*** ▼ -□■□□□+ ▲ ▼ -■□□□□+ ▲	Adjusts the contrast of the LCD.	23
	0.Local Language (Canada only)	—	**English*** Français	Allows you to change the LCD language for your country.	*See Quick Setup Guide*
2.Copy	1.Quality	—	**Auto*** Text Photo	You can choose the Copy resolution for your type of document.	29
	2.Brightness	—	▼ -□□□□■+ ▲ ▼ -□□□■□+ ▲ ▼ **-□□■□□+ ▲*** ▼ -□■□□□+ ▲ ▼ -■□□□□+ ▲	Adjusts the brightness for copies.	30
	3.Contrast	—	▼ -□□□□■+ ▲ ▼ -□□□■□+ ▲ ▼ **-□□■□□+ ▲*** ▼ -□■□□□+ ▲ ▼ -■□□□□+ ▲	Adjusts the contrast for copies.	30

D

Main Menu	Submenu	Menu Selections	Options	Descriptions	Page
2.Copy (continued)	4.Color Adjust	1.Red	▼ -□□□□■+ ▲ ▼ -□□□■□+ ▲ ▼ **-□□■□□+ ▲*** ▼ -□■□□□+ ▲ ▼ -■□□□□+ ▲	Adjusts the red color for copies.	30
		2.Green	▼ -□□□□■+ ▲ ▼ -□□□■□+ ▲ ▼ **-□□■□□+ ▲*** ▼ -□■□□□+ ▲ ▼ -■□□□□+ ▲	Adjusts the green color for copies.	
		3.Blue	▼ -□□□□■+ ▲ ▼ -□□□■□+ ▲ ▼ **-□□■□□+ ▲*** ▼ -□■□□□+ ▲ ▼ -■□□□□+ ▲	Adjusts the blue color for copies.	
3.Printer	1.Emulation	—	**Auto*** HP LaserJet BR-Script 3	Chooses the emulation mode.	*See Software User's Guide on the CD-ROM.*
	2.Print Options	1.Internal Font	—	Prints a list of the machine's internal fonts.	
		2.Configuration	—	Prints a list of the machine's printer settings.	
		3.Test Print	—	Prints a test page.	
	3.Output Color	—	**Auto*** Color B&W	Chooses color or black & white printed documents. If you choose Auto, the machine selects a suitable option for the document (color or B&W).	
	4.Reset Printer	1.Reset	—	Returns the PCL setting to the default settings.	
		2.Exit	—		
	5.Calibration	—	Calibrate Reset	Adjusts the color density or returns the color calibration to the factory setting.	

Main Menu	Submenu	Menu Selections	Options	Descriptions	Page
3.Printer (continued)	**6.Auto Regist.**	**1.Registration**	**1.Start**	Adjust the print position of each color automatically.	*See Software User's Guide on the CD-ROM.*
			2.Exit		
		2.Frequency	Low **Medium*** High Off	Set the interval time you want to carry out the auto registration.	
	7.Manual Regist.	**1.Print Chart**	—	Print the chart to manually check the registration of the colors.	
		2.Set Regist.	1 Magenta Left 2 Cyan Left 3 Yellow Left 4 Magenta Center 5 Cyan Center 6 Yellow Center 7 Magenta Right 8 Cyan Right 9 Yellow Right	Sets the correction value on the chart you printed from Print Chart.	
4.LAN	**1.TCP/IP**	**1.BOOT Method**	**Auto*** Static RARP BOOTP DHCP	Chooses the BOOT method that best suits your needs. (If you choose Auto, RARP, BOOTP or DHCP, you will be asked to enter how many times the machine tries to obtain the IP address.)	*See Network User's Guide on the CD-ROM.*
		2.IP Address	[000-255]. [000-255]. [000-255]. [000-255]	Enter the IP address.	
		3.Subnet Mask	[000-255]. [000-255]. [000-255]. [000-255]	Enter the Subnet mask.	
		4.Gateway	[000-255]. [000-255]. [000-255]. [000-255]	Enter the Gateway address.	
		5.Node Name	BRNXXXXXX	Enter the Node name.	
		6.WINS Config	**Auto*** Static	Chooses the WINS configuration mode.	

D

Main Menu	Submenu	Menu Selections	Options	Descriptions	Page
4.LAN (continued)	**1.TCP/IP** (continued)	**7.WINS Server**	(Primary) 000.000.000.000 (Secondary) 000.000.000.000	Specifies the IP address of the primary or secondary WINS server.	*See Network User's Guide on the CD-ROM.*
		8.DNS Server	(Primary) 000.000.000.000 (Secondary) 000.000.000.000	Specifies the IP address of the primary or secondary DNS server.	
		9.APIPA	**On*** Off	Automatically allocates the IP address from the link local address range.	
		0.IPv6	On **Off***	Sets the IPv6 protocol On.	
	2.Ethernet	—	**Auto*** 100B-FD 100B-HD 10B-FD 10B-HD	Chooses the Ethernet link mode.	
	3.Scan to FTP	—	**Color 150 dpi*** Color 300 dpi Color 600 dpi B&W 200 dpi B&W 200x100 dpi	Sets the resolution to send the scanned data via the FTP server.	
	0.Factory Reset	**1.Reset**	1.Yes	Restores the network settings to the factory default.	
			2.No		
		2.Exit	—		

Main Menu	Submenu	Menu Selections	Options	Descriptions	Page
5.Machine Info.	1.Serial No.	—	—	You can check the serial number of your machine.	130
	2.Page Counter	—	Total List Copy Print	You can check the number of total pages the machine has printed during its life.	130
	3.User Settings	—	—	You can print a list of your settings including the network configuration.	23
	4.Parts Life	1.Drum 2.Belt Unit 3.PF Kit MP 4.PF Kit 1 5.Fuser 6.Laser	—	You can check the percentage of a machine part's life that remains available.	131
	5.Reset Menu	—	Drum Belt Unit PF Kit MP PF Kit 1	Resets the machine part's life counter. Appears when you replace the machine part.	106 113

D

Entering text

When setting certain menu selections, you will need to type text characters. The numeric keys have letters printed on them. The keys: **#** and ∗ do *not* have printed letters because they are used for special characters.

Press the appropriate numeric key the required number of times to access the characters below:

■ For setting Scan to FTP menu options

Press Key	one time	two times	three times	four times	five times	six times	seven times	eight times	nine times
1	@	.	/	1	@	.	/	1	@
2	a	b	c	A	B	C	2	a	b
3	d	e	f	D	E	F	3	d	e
4	g	h	i	G	H	I	4	g	h
5	j	k	l	J	K	L	5	j	k
6	m	n	o	M	N	O	6	m	n
7	p	q	r	s	P	Q	R	S	7
8	t	u	v	T	U	V	8	t	u
9	w	x	y	z	W	X	Y	Z	9

■ For setting other menu selections

Press Key	one time	two times	three times	four times	five times
2	A	B	C	2	A
3	D	E	F	3	D
4	G	H	I	4	G
5	J	K	L	5	J
6	M	N	O	6	M
7	P	Q	R	S	7
8	T	U	V	8	T
9	W	X	Y	Z	9

Inserting spaces

To enter a space in a name, press ▶ twice between characters.

Making corrections

If you entered a letter incorrectly and want to change it, press ◀ to move the cursor to the incorrect character, and then press **Clear/Back**.

Repeating letters

To enter a character on the same key as the previous character, press ▶ to move the cursor right before pressing the key again.

Special characters and symbols

Press ∗ or **#**, then press ◀ or ▶ to move the cursor to the symbol or character you want. Press **OK** to choose it. The symbols and characters below will appear depending on your menu selection.

Press ∗	for	(space) ! " # $ % & ' ( ) ∗ + , - . /
Press **#**	for	: ; < = > ? @ [ ] ^ _ ¥ ~ ‘ | { }

E Specifications

General

Memory Capacity	64 MB	
ADF (automatic document feeder)	Up to 35 pages (Staggered) [20 lb (80 g/m^2)]	
	Recommended Environment for Best Results:	
	Temperature:	68° F to 86° F (20 to 30° C)
	Humidity:	50% - 70%
	Paper:	Xerox 4200 (20 lb/Letter)
Paper Tray	250 Sheets [20 lb (80 g/m^2)]	
Printer Type	Laser	
Print Method	Electrophotography by semiconductor laser beam scanning	
LCD (liquid crystal display)	16 characters × 2 lines	
Power Source	110-120 V AC 50/60 Hz	
Power Consumption	Peak:	Average 1200 W
	Copying:	Average 495 W
	Sleep:	Average 28 W
	Standby:	Average 95 W
Dimensions	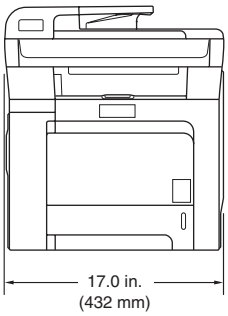	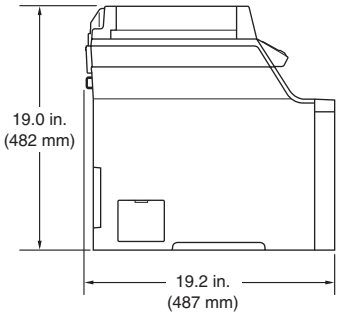
Weight	Without Drum/Toner Unit:	62.0 lb (28.1 kg) (DCP-9040CN)
		63.3 lb (28.7 kg) (DCP-9042CDN)
Noise level	Sound power	
	Operating (Copying):	LWAd = 6.9 Bell
	Standby:	LWAd = 4.4 Bell
	Sound pressure	
	Operating (Copying):	LpAm = 54.5 dBA
	Standby:	LpAm = 30 dBA
Temperature	Operating:	50° F to 90.5° F (10 to 32.5° C)
	Storage:	41° F to 95° F (5 to 35° C)
Humidity	Operating:	20 to 80% (without condensation)
	Storage:	10 to 90% (without condensation)

Print media

Paper Input	**Paper Tray**	
	■ Paper Type:	Plain paper, Thin paper or Recycled paper
	■ Paper Size:	Letter, A4, B5, A5, B6, A6, Executive, Legal and Folio
	■ Paper Weight:	16 to 28 lb (60 to 105 g/m^2)
	■ Maximum paper tray capacity:	Up to 250 sheets of 20 lb (80 g/m^2) plain paper
	Multi-purpose tray (MP tray)	
	■ Paper Type:	Plain paper, Thin paper, Thick paper, Recycled paper, Bond paper, Envelopes or Labels
	■ Paper Size:	Width: 2.75 to 8.5 in. (69.9 to 215.9 mm) Length: 4.57 to 16 in. (116.0 to 406.4 mm)
	■ Paper Weight:	16 to 43 lb (60 to 163 g/m^2)
	■ Maximum paper tray capacity:	Up to 50 sheets of 20 lb (80 g/m^2) plain paper Up to 3 envelopes
Paper Output	Up to 150 sheets (face down print delivery to the output paper tray)	
Duplex	■ Paper Size	Letter, Legal and Folio
	■ Manual Duplex	Yes
	■ Automatic Duplex (DCP-9042CDN only)	Yes (print only)

E

Copy

Copy Speed	Up to 17 pages/minute (Letter size) (Black) [1] [2]	
	Up to 17 pages/minute (Letter size) (Color) [1] [2]	
Color/Monochrome	Yes/Yes	
Document Size	ADF Width:	5.8 to 8.5 in. (148 to 215.9 mm)
	ADF Height:	5.8 to 14 in. (148 to 355.6 mm)
	Scanner Glass Width:	Max. 8.5 in. (215.9 mm)
	Scanner Glass Height:	Max. 11.7 in. (297 mm)
	Copy Width:	Max. 8.26 in. (210 mm)
Multiple Copies	Stacks or Sorts up to 99 pages	
Reduce/Enlarge	25% to 400% (in increments of 1%)	
Resolution	Up to 1200 × 600 dpi	
First Copy Out Time	Approx. 21 seconds (Black) [3]	
	Approx. 23 seconds (Color) [3]	

[1] The copy speed may change depending on the type of document you copy.

[2] From the standard paper tray.

[3] First copy out time may change if the machine is calibrating or registering itself.

Scan

Color/Monochrome	Yes/Yes	
TWAIN Compliant	Yes (Windows® 2000 Professional/XP/ XP Professional x64 Edition/Windows Vista®)	
	Mac OS® X 10.2.4 or greater	
WIA Compliant	Yes (Windows® XP/Windows Vista®)	
Color Depth	24 bit color	
Resolution	Up to 19200 × 19200 dpi (interpolated) [1]	
	Up to 1200 × 2400 dpi (optical) [2]	
	Up to 1200 x 600 dpi (optical) [3]	
Document Size	ADF Width:	5.8 to 8.5 in. (148.0 to 215.9 mm)
	ADF Height:	5.8 to 14 in. (148.0 to 355.6 mm)
	Scanner Glass Width:	Max. 8.5 in. (215.9 mm)
	Scanner Glass Height:	Max. 11.7 in. (297 mm)
Scanning Width	Max. 8.26 in. (210 mm)	
Gray Scale	256 levels	

1 Maximum 1200 × 1200 dpi scanning with the WIA driver in Windows® XP/Windows Vista® (resolution up to 19200 × 19200 dpi can be chosen by using the Brother scanner utility)

2 When using the scanner glass

3 When using the ADF

Print

Emulations	PCL6 BR-Script (PostScript) Level 3
Printer Driver	Host-Based Driver for Windows® 2000 Professional/ XP/XP Professional x64 Edition/Windows Vista®/ Windows Server® 2003 (print only via network) BR-Script (PPD file) for Windows® 2000 Professional/ XP/XP Professional x64 Edition/Windows Vista® Macintosh® Printer Driver for Mac OS® X 10.2.4 or greater BR-Script (PPD file) for Mac OS® X 10.2.4 or greater
Resolution	600 × 600 dpi, 2400 dpi (2400 × 600 dpi)
Print Speed	Up to 21 pages/minute (Letter size) (Black) [1] [2] Up to 21 pages/minute (Letter size) (Color) [1] [2]
Print Speed for Duplex Printing (DCP-9042CDN only)	Up to 7 sides/minute (3.5 pages) (Black) [1] [2] Up to 7 sides/minute (3.5 pages) (Color) [1] [2]
First Print Out Time	Less than 16 seconds (Black) [3] Less than 17 seconds (Color) [3]

1 The print speed may change depending on the type of document you print.

2 From the standard paper tray.

3 First print out time may change if the machine is calibrating or registering itself.

Interfaces

USB	Use a USB 2.0 interface cable that is no longer than 6 feet (2.0 m). [1] [2]
LAN cable	Use an Ethernet UTP cable category 5 or greater.

1 Your machine has a Hi-Speed USB 2.0 interface. The machine can also be connected to a computer that has a USB 1.1 interface.

2 Third party USB ports are not supported.

Computer requirements

Minimum System Requirements and Supported PC Software Functions								
Computer Platform & Operating System Version		**Supported PC Software Functions**	**PC Interface**	**Processor Minimum Speed**	**Minimum RAM**	**Recommended RAM**	**Available Hard Disk Space**	
							For Drivers	**For Applications**
Windows® Operating System	Windows® 2000 Professional [3]	Printing, Scanning	USB, 10/100 BaseTx (Ethernet)	Intel® Pentium® or equivalent	64 MB	256 MB	150 MB	310 MB
	Windows® XP Home [1 3] Windows® XP Professional [1 3]				128 MB			
	Windows® XP Professional x64 Edition [1]			64-bit processors [4]	256 MB	512 MB		
	Windows Vista® [1]			1GHz 32-bit (x86) or 64-bit (x64) [4] processers	512 MB	1 GB	500 MB	500 MB
	Windows Server® 2003	Printing	10/100 BaseTx (Ethernet)	Intel® Pentium® III or equivalent	256 MB	512 MB	50 MB	Not available
	Windows Server® 2003 x64 Edition			64-bit processors [4]	256 MB			
Macintosh® Operating System	Mac OS® X 10.2.4 or greater	Printing, Scanning	USB [2], 10/100 BaseTx (Ethernet)	PowerPC G4/G5, Intel® Core™ Solo/Duo, PowerPC G3 350MHz	128 MB	160 MB	80 MB	400 MB

1 For WIA, 1200x1200 resolution. Brother Scanner Utility enables to enhance up to 19200 x 19200 dpi.

2 Third party USB ports are not supported.

3 PaperPort™ 11SE supports Microsoft® SP4 or higher for Windows® 2000 and SP2 or higher for XP.

4 AMD Opteron™, AMD Athlon™ 64, Intel® Xeon® with Intel® EM64T, Intel® Pentium® 4 with Intel® EM64T or equivalent

E

Consumable items

Toner Cartridge Life	Standard Toner Cartridges:	
	TN-110BK (Black):	2,500 pages [1]
	TN-110C, **TN-110M**, **TN-110Y** (Cyan, Magenta, Yellow):	1,500 pages [1]
	High-Yield Toner Cartridges:	
	TN-115BK (Black):	5,000 pages [1]
	TN-115C, **TN-115M**, **TN-115Y** (Cyan, Magenta, Yellow):	4,000 pages [1]
Drum Unit Life Expectancy	**DR-110CL**:	Approx. 17,000 pages [2]
Belt Unit	**BU-100CL**:	Approx. 50,000 pages [3]
Waste Toner Box	**WT-100CL**:	Approx. 20,000 pages [4]

[1] Approx. yields based on 5% page coverage (Letter)

[2] Drum yield is approximate, and may vary by type of use.

[3] When printing on Letter or A4 size paper

[4] When printing on Letter or A4 size paper at 5% print coverage for CMYK each.

Ethernet wired network

Network board model name	NC-6500h
LAN	You can connect your machine to a network for Network Printing and Network Scanning [1]
Support for	Windows® 2000 Professional, Windows® XP, Windows® XP Professional x64 Edition, Windows Vista®, Windows Server® 2003 and Windows Server® 2003 x64 Edition [1] Mac OS® X 10.2.4 or greater [2]
Protocols	IPv4: TCP/IP: ARP, RARP, BOOTP, DHCP, APIPA (Auto IP), WINS, NetBIOS name resolution, DNS resolver, mDNS, LPR/LPD, Custom Raw Port/Port9100, IPP, IPPS, FTP server, SSL/TLS, POP before SMTP, SMTP-AUTH, Telnet, SNMPv1, HTTP/HTTPS server, TFTP client and server, SMTP client, APOP, LLTD responder, Raw Port (PC scanner), FTP client IPv6: TCP/IP: (Turned off as default) NDP, RA, DNS, mDNS, LPR/LPD, Custom Raw Port/Port9100, IPP, IPPS, FTP server, SSL/TLS, POP before SMTP, SMTP-AUTH, Telnet, SNMPv1, HTTP/HTTPS server, TFTP client and server, SMTP client, APOP, LLTD responder, Raw Port (PC scanner)
Network type	Ethernet 10/100 BASE-TX Auto Negotiation (Wired LAN)
Management utilities [3]	BRAdmin Light for Windows® 2000 Professional, Windows® XP, Windows® XP Professional x64 Edition, Windows Vista®, Windows Server® 2003, Windows Server® 2003 x64 Edition and Mac OS® X 10.2.4 or greater BRAdmin Professional for Windows® 2000 Professional, Windows® XP, Windows® XP Professional x64 Edition, Windows Vista®, Windows Server® 2003 and Windows Server 2003 x64 Edition Web BRAdmin for Windows® 2000 Professional, Windows® XP, Windows® XP Professional x64 Edition, Windows Vista®, Windows Server® 2003 and Windows Server 2003 x64 Edition Client computers with a web browser supporting Java™

1 Printing only for Windows Server® 2003

2 Mac OS® X 10.2.4 or greater (mDNS)

3 BRAdmin Professional and Web BRAdmin are available as a download from http://solutions.brother.com/

E

F Glossary

This is a comprehensive list of features and terms that appear in Brother manuals. Availability of these features depends on the model you purchased.

ADF (automatic document feeder)

The document can be placed in the ADF and scanned one page at a time automatically.

Beeper Volume

Volume setting for the beep when you press a key or make an error.

Cancel Job

Cancels a print job and clears the printer memory.

Contrast

Setting to compensate for dark or light documents, by making copies of dark documents lighter and light documents darker.

Gray scale

The shades of gray available for copying photographs.

LCD (liquid crystal display)

The display screen on the machine that shows interactive messages during On-Screen Programming.

Menu mode

Programming mode for changing your machine's settings.

OCR (optical character recognition)

The bundled ScanSoft™ PaperPort™ 11SE with OCR or Presto!® PageManager® software application converts an image of text to text you can edit.

Resolution

The number of vertical and horizontal lines per inch.

Scanning

The process of sending an electronic image of a paper document into your computer.

Temporary settings

You can select certain options for each copy without changing the default settings.

User Settings List

A printed report that shows the current settings of the machine.

G Index

A

Accessories and supplies ii
ADF (automatic document feeder)
  using 18
Apple® Macintosh®
  See Software User's Guide on the CD-ROM.

B

Belt unit 112
Brother
  accessories and supplies ii
  Brother numbers i
  Customer Service i
  FAQs (frequently asked questions) i
  product support i
  service centers i
  warranties ..... iii, iv, vi

C

Canceling
  print jobs 6
Cleaning
  corona wire 87
  drum unit 90
  laser scanner window 83
  scanner 82
Consumable items 98
Control panel overview 6
ControlCenter2 (for Macintosh®)
  See Software User's Guide on the CD-ROM.
ControlCenter3 (for Windows®)
  See Software User's Guide on the CD-ROM.
Copy
  brightness 30
  color saturation 30
  contrast 26, 30
  Enlarge/Reduce key 27
  keys 6, 27
  multiple 26
  N in 1 (page layout) 31
  Options key 28
  out of memory 32
  quality 29
  single 26
  sort (ADF only) 29
  temporary settings 27
  tray selection 32
  using ADF 18, 29, 31
  using scanner glass 19, 31

D

Data LED 6
Document
  how to load
    ADF 18
    scanner glass 19
  jam 69
Drum unit
  checking (remaining life) 131
  cleaning 87, 90
  replacing 106
Duplex (2-sided)
  troubleshooting 50, 78

E

Enlarge/Reduce key 27
Envelopes 9, 11, 12, 13, 15, 16
Error messages on LCD 65
  Change Belt Unit 112
  Drum End Soon 106
  Init Unable XX 66
  No Paper 67
  Out of Memory 67
  Print Unable XX 67
  Scan Unable XX 68
  Toner Life End 101
  Toner Low 101
  Waste Toner Soon 117

F

Folio 13, 21, 31

G

Gray scale 145

H

HELP
LCD messages 132
Menu Table 132, 134
using menu keys 132

J

Jams
document 69
paper 70
Job Cancel key 6, 50

L

Labels 11, 12, 13, 17
LCD (liquid crystal display) 6, 132
contrast 23

M

Machine information
checking remaining life of parts 131
Data LED 8
page counters 130
Macintosh®
See Software User's Guide on the CD-ROM.
Maintenance, routine 81
checking the remaining life of parts 131
replacing
belt unit 112, 113
drum unit 106
toner cartridge 101
waste toner box 117
Memory
adding DIMM (option) 47
installing 47
storage 132
Menu Table 132, 134
using menu keys 132

N

N in 1 (page layout) 31
Network
printing
See Network User's Guide on the CD-ROM.
scanning
See Software User's Guide on the CD-ROM.

O

Out of Memory message 32, 67

P

Packing and shipping the machine 123
Page layout (N in 1) 31
Paper 12, 143
folio 13
how to load 9
jam 70
size 12
size of document 144, 145
type 12, 21
PaperPort™ 11SE with OCR
See Software User's Guide on the CD-ROM and Help in the PaperPort™ 11SE application to access How-to-Guides.
Post card 11, 13
Power failure 132
Print
drivers 146
Job Cancel key 6, 50
keys 6
paper jams 70
quality 54
resolution 146
Secure key 6
specifications 146
Printing
See Software User's Guide on the CD-ROM.
Programming your machine 132

Q

Quality (copying) 29

R

Reducing
  copies 27
Replacing
  belt unit 112, 113
  drum unit 106
  toner cartridge 101
  waste toner box 117, 118
Resolution
  copy 144
  print 146
  scan 145

S

Safety instructions 42
Scanner glass, using 19
Scanning
  See Software User's Guide on the CD-ROM.
Secure key 6
Serial number
  how to find.....See inside front cover
Service centers i
Shipping the machine 123
Sleep time 23
Sort 26, 29

T

Temporary copy settings 27
Text, entering 140
Toner cartridge, replacing 101
Toner save 23
Tray selection 32
Tray use, setting
  copy 22
  print 22
Troubleshooting 49
  document jam 69
  error messages on LCD 65
  if you are having difficulty
    copy quality 49
    network 51
    paper handling 51
    print quality 51, 54
    printing 49
    scanning 50
    software 50
  paper jam 70

U

User Settings List 23

V

Volume, setting
  beeper 22

W

Warranties iii
  Canada vi
  Notice-Disclaimer iii
  USA iv
Waste toner box 117
Windows®
  See Software User's Guide on the CD-ROM.
World Wide Web i

G

EQUIPMENT ATTACHMENT LIMITATIONS (Canada only)

NOTICE

This product meets the applicable Industry Canada technical specifications.

Brother International Corporation
100 Somerset Corporate Boulevard
P.O. Box 6911
Bridgewater, NJ 08807-0911 USA

Brother International Corporation (Canada) Ltd.
1 rue Hôtel de Ville,
Dollard-des-Ormeaux, QC, Canada H9B 3H6

Visit us on the World Wide Web
http://www.brother.com/

These machines are made for use in the USA and Canada only. We cannot recommend using them overseas because the power requirements of your Digital Copier/Printer may not be compatible with the power available in foreign countries. **Using USA or Canada models overseas is at your own risk and may void your warranty**.