Brother Laser Printer

USER'S GUIDE

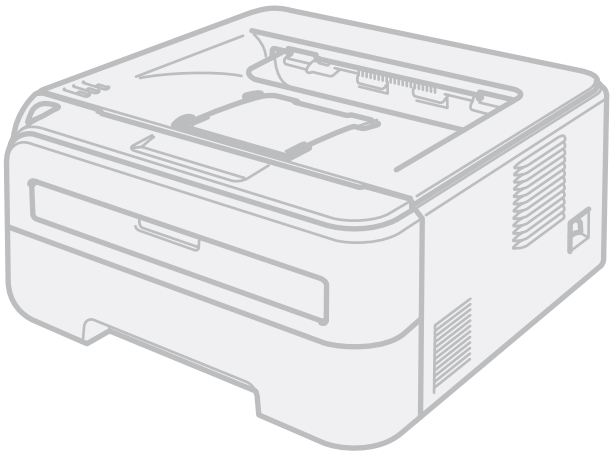

HL-2140
HL-2150N
HL-2170W

For visually-impaired users

You can read this manual with Screen Reader 'text-to-speech' software.

You must set up the hardware and install the driver before you can use the printer.

Please use the Quick Setup Guide to set up the printer. You can find a printed copy in the box.

Please read this User's Guide thoroughly before you use the printer. Keep the CD-ROM in a convenient place so you can use it quickly if you need to.

Please visit us at http://solutions.brother.com where you can get product support, the latest driver updates and utilities, and answers to frequently asked questions (FAQs) and technical questions.

Note: Not all models are available in all countries.

Version D

USA

Using this guide

Symbols used in this guide

We use the following icons throughout this User's Guide:

	Warnings tell you what to do to prevent possible personal injury.
	Electrical Hazard icons alert you to a possible electrical shock.
	Hot Surface icons warn you not to touch machine parts that are hot.
	Cautions specify procedures you must follow or avoid to prevent possible damage to the printer or other objects.
	Improper Setup icons alert you to devices and operations that are not compatible with the printer.
	Notes tell you how you should respond to a situation that may arise or give tips about how the operation works with other features.

Safety precautions

To use the printer safely

Please keep these instructions for later reference and read them before attempting any maintenance. If you DO NOT follow these safety instructions, there is a possibility of a fire, electrical shock, burn or suffocation.

WARNING

There are high voltage electrodes inside the printer. Before you clean the inside of the printer, make sure that you have turned off the power switch and unplugged the printer from the AC power outlet.

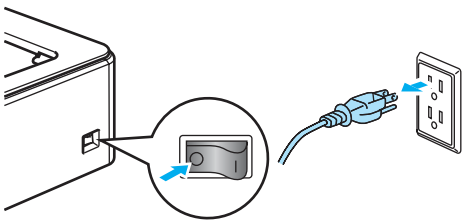

DO NOT handle the plug with wet hands. Doing this might cause an electrical shock.

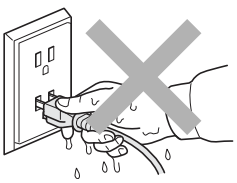

Always make sure the plug is fully inserted.

DO NOT use a vacuum cleaner to clean up scattered toner. Doing this might cause the toner dust to ignite inside the vacuum cleaner, potentially starting a fire. Carefully clean the toner dust with a dry, lint-free cloth and dispose of it according to local regulations.

DO NOT use flammable substances, any type of spray or an organic solvent/liquids containsalcohol or ammonia to clean the inside or outside of the machine. Refer to *Cleaning* on page 73 for how to clean the machine.

After you have just used the printer, some internal parts of the printer will be extremely hot. When you open the front or back cover (back output tray) of the printer, DO NOT touch the shaded parts shown in the illustration.

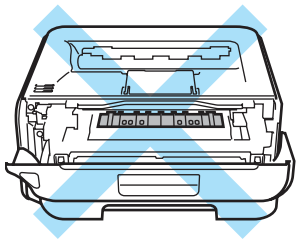

Inside the printer
(Front View)

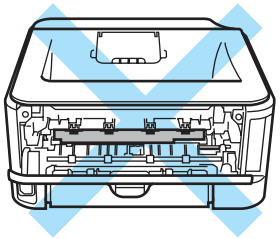

Inside the printer
(Back View)

Plastic bags are used in the packaging of your machine and drum unit. To avoid danger of suffocation, keep these bags away from babies and children.

Cleaning the outside of the printer:

- Make sure that you have unplugged the printer from the AC power outlet.
- Use neutral detergents. Cleaning with volatile liquids such as thinner or benzine will damage the outside surface of the printer.
- DO NOT use cleaning materials that contain ammonia.

CAUTION

Lightning and power surges can damage this product! We recommend that you use a quality surge protection device on the AC power line, or unplug the cords during a lightning storm.

Note

DO NOT remove or damage the caution labels located on or around the fuser.

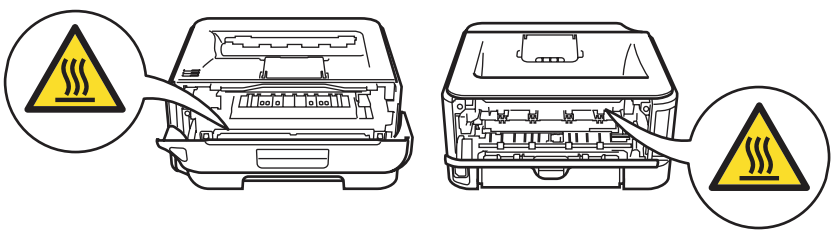

Trademarks

The Brother logo is a registered trademark of Brother Industries, Ltd.

Apple, the Apple Logo, Macintosh and TrueType are registered trademarks of Apple Inc. in the United States and other countries.

Hewlett Packard is a registered trademark and HP LaserJet 6P, 6L, 5P, 5L, 4, 4L 4P, III, IIIP, II, and IIP are trademarks of Hewlett-Packard Company.

Windows Vista is either a registered trademark or a trademark of Microsoft Corporation in the United States and other countries.

Microsoft, Windows and Windows Server are registered trademarks of Microsoft Corporation in the United States and/or other countries.

ENERGY STAR is a U.S. registered mark.

SuSE is a registered trade mark of SuSE Linux AG.

RED HAT is a registered trade mark of Red Hat. Inc.

Mandrake is a registered trade mark of Mandrake Soft SA.

Intel, Intel Xeon and Pentium are trademarks or registered trademarks of Intel Corporation.

AMD, AMD Athlon, AMD Opteron and combinations thereof, are trademarks of Advanced Micro Devices, Inc.

Java and all Java-based trademarks and logos are trademarks or registered trademarks of Sun Microsystems, Inc. in the United States and other countries.

Each company whose software title is mentioned in this manual has a Software License Agreement specific to its proprietary programs.

All other terms and brand and product names mentioned in this User's Guide are registered trademarks of their respective companies.

Compilation and Publication Notice

Under the supervision of Brother Industries Ltd., this manual has been compiled and published, covering the latest product's descriptions and specifications. The contents of this manual and the specifications of this product are subject to change without notice. Brother reserves the right to make changes without notice in the specifications and materials contained herein and shall not be responsible for any damages (including consequential) caused by reliance on the materials presented, including but not limited to typographical and other errors relating to the publication.

© 2007 Brother Industries Ltd.

Shipment of the Printer

If for any reason you must ship your printer, carefully package the printer to avoid any damage during transit. We recommend that you save and use the original packaging. The printer should also be adequately insured with the carrier.

Table of Contents

1 About this Printer 1

What is in the box? 1
Interface cable 1
Front view 2
Back view 3
Positioning the printer 4
Power supply 4
Environment 4

2 Printing Methods 5

About paper 5
Type and size of paper 5
Recommended paper 6
Unprintable area 8
Printing methods 9
Printing on plain paper and transparencies 9
Printing on thick paper, labels and envelopes 17
Duplex printing 22
Guidelines for printing on both sides of the paper 22
Printing on both sides of the paper (manual duplex printing) 22

3 Driver and Software 26

Printer driver 26
Features in the printer driver (for Windows®) 29
Features in the printer driver (for Macintosh®) 39
Uninstalling the printer driver 45
Printer driver for Windows® and Windows Vista® and Windows Server® 2003 45
Printer driver for Macintosh® 45
Software 46
Software for network models (HL-2150N / HL-2170W only) 46
Automatic interface selection (HL-2150N / HL-2170W only) 47
Remote Printer Console 47

4 Control Panel 48

LEDs (Light Emitting Diodes) 48
Service call indications 53
Go button 55
Print a test page 56
Print a Printer Settings page 57
Print Fonts (HL-2150N / HL-2170W only) 58
Network default settings (HL-2150N / HL-2170W only) 59

5 Routine Maintenance 60

Replacing the consumable items 60
Consumables 60

Toner cartridge 61
Drum unit 68
Cleaning 73
Cleaning the outside of the printer 73
Cleaning the inside of the printer 74
Cleaning the corona wire 77

6 Troubleshooting 79

Identifying your problem 79
Error messages in the Status Monitor 80
Error message printout 82
Paper handling 83
Paper jams and how to clear them 85
Improving the print quality 91
Solving print problems 97
Network problems (HL-2150N / HL-2170W only) 98
Other problems 98
For Macintosh® with USB 98

A Appendix 99

Printer specifications 99
Engine 99
Controller 100
Software 101
Control panel 101
Paper handling 101
Media specifications 102
Supplies 102
Dimensions / weights 102
Other 103
Computer requirements 103
Important information for choosing your paper 104
Symbol and character sets (HL-2150N / HL-2170W only) 107
How to use Web Based Management (web browser) 107
Symbol and character sets list 108
Quick reference for bar code control commands (HL-2150N / HL-2170W only) 110
Print bar codes or expanded characters 110

B Appendix (for Europe and Other Countries) 117

Brother numbers 117
Important information: regulations 118
Radio interference (220 to 240 volt model only) 118
IEC 60825-1 specification (220 to 240 volt model only) 118
Internal laser radiation 119
IMPORTANT - for your safety 120
EC Declaration of Conformity 121

C Appendix (for USA and Canada) 122

Brother numbers 122
Important information: regulations 125
Federal Communications Commission (FCC) Declaration of Conformity (USA only) 125
Industry Canada Compliance Statement (Canada only) 125
International ENERGY STAR® Compliance Statement 126
Laser notices 127
Laser safety (110 to 120 volt model only) 127
FDA regulations (110 to 120 volt model only) 127
Internal laser radiation 127
IMPORTANT - for your safety 128

D Index 129

1 About this Printer

What is in the box?

When you unpack the printer, make sure that you have all of the following parts.

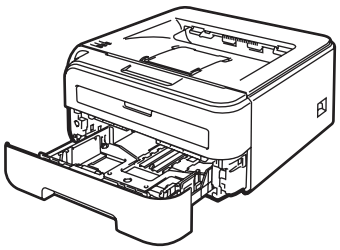 **Printer**			
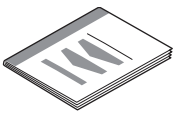 **Quick Setup Guide**	**CD-ROM**	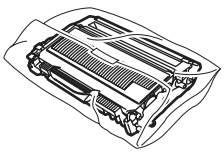 **Drum unit and starter toner cartridge assembly**	**AC power cord**

Interface cable

The interface cable is not a standard accessory. Purchase the appropriate cable for the interface you are using.

- USB cable

  Please make sure you use a USB 2.0 interface cable that is no longer than 6 feet (2 meters).

  DO NOT connect the interface cable at this time. Connecting the interface cable is done during the printer driver installation process.

  When you use a USB cable, make sure you connect it to the USB port of your computer and not to a USB port on a keyboard or non-powered USB hub.

  Third party USB ports are not supported for Macintosh®.

- Network cable (HL-2150N / HL-2170W only)

  Use a straight-through Category5 (or greater) twisted-pair cable for 10BASE-T or 100BASE-TX Fast Ethernet Network.

Front view

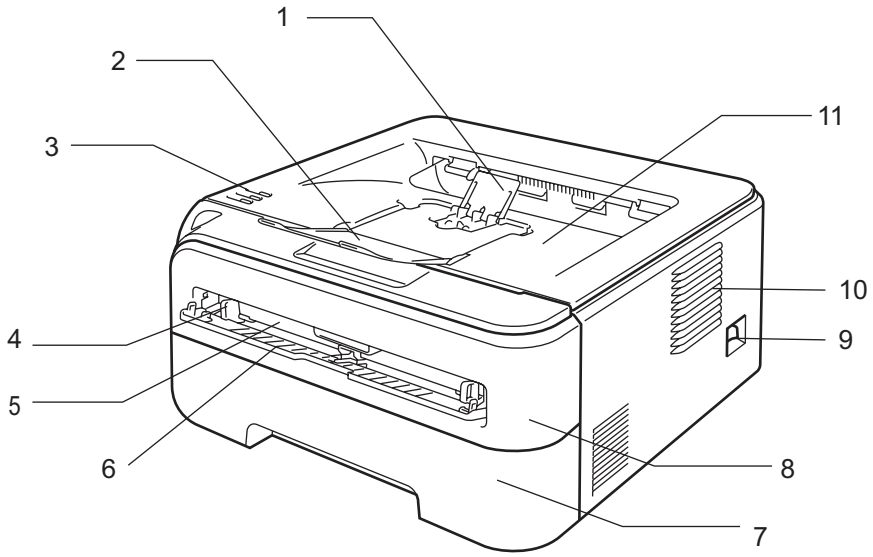

1 Face-down output tray support flap 2 (support flap 2) [1]

2 Face-down output tray support flap 1 (support flap 1)

3 Control panel [2]

4 Manual feed paper guide

5 Manual feed slot

6 Manual feed slot cover

7 Paper tray

8 Front cover

9 Power switch

10 Ventilation hole

11 Face-down output tray

[1] For details about the support flap 2, see page 96.

[2] For details about the control panel, see *Chapter 4*.

Back view

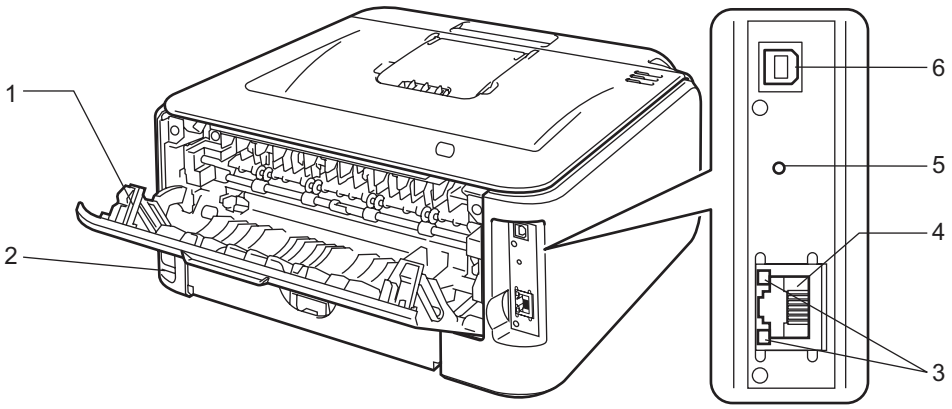

1 **Back cover (back output tray)**
2 **AC power connector**
3 **HL-2150N / HL-2170W: Network status LEDs (Light Emitting Diodes)**
4 **HL-2150N / HL-2170W: 10/100BASE-TX port**
5 **HL-2170W: Wireless setup button**
6 **USB interface connector**

Positioning the printer

Read the following before you use the printer.

Power supply

Use the printer within the recommended power range.

Power source:	USA and Canada:	AC 110 to 120 V, 50/60 Hz
	Europe and Australia:	AC 220 to 240 V, 50/60 Hz

The power cord, including extensions, should be no longer than 5 meters (16.5 feet).

Do not share the same power circuit with other high-powered appliances, such as an air conditioner, copier, shredder and so on. If you cannot avoid using the printer with these appliances, we recommend that you use a voltage transformer or a high-frequency noise filter.

Use a voltage regulator if the power source is not stable.

Environment

- Put your printer on a flat, stable surface such as a desk that is free of vibration and shocks.
- Put the printer near an AC power outlet, so that it can be easily unplugged from the AC power outlet if there is an emergency.
- Only use the printer within the following ranges of temperature and humidity:

  Temperature: 10 °C to 32.5 °C (50 °F to 90.5 °F)

  Humidity: 20% to 80% (without condensation)
- Use the printer in a well-ventilated room.
- DO NOT put the printer where the ventilation hole of the printer is blocked. Keep a gap of roughly 100 mm (4 in.) between the ventilation hole and the wall.
- DO NOT expose the printer to direct sunlight, excessive heat, moisture, or dust.
- DO NOT put the printer near devices that contain magnets or produce magnetic fields.
- DO NOT expose the printer to open/naked flames or salty or corrosive gasses.
- DO NOT put objects on top of the printer.
- DO NOT put the printer near heaters, air conditioners, water, chemicals or refrigerators.
- Keep the printer horizontal when you carry it.

2 Printing Methods

About paper

Type and size of paper

The printer loads paper from the installed paper tray or the manual feed slot.

The names for the paper trays in the printer driver and this guide are as follows:

Paper tray	Tray 1
Manual feed slot	Manual

When looking at this page in the electronic file, you can jump to the page for each printing method by clicking ⓘ in the table.

Media type	Tray 1	Manual	Choose the media type from the printer driver
Plain paper 75 g/m^2 to 105 g/m^2 (20 to 28 lb)	ⓘ	ⓘ	**Plain Paper**
Recycled paper	ⓘ	ⓘ	**Recycled Paper**
Bond paper Rough paper– 60 g/m^2 to 163 g/m^2 (16 to 43 lb)		ⓘ	**Bond Paper**
Thin paper 60 g/m^2 to 75 g/m^2(16 to 20 lb)	ⓘ	ⓘ	**Thin Paper**
Thick paper 105 g/m^2 to 163 g/m^2(28 to 43 lb)		ⓘ	**Thick Paper** or **Thicker Paper**
Transparency	ⓘ A4 or Letter	ⓘ A4 or Letter	**Transparencies**
Labels		ⓘ A4 or Letter	**Thicker Paper**
Envelopes		ⓘ	**Envelopes** **Env. Thin** **Env. Thick**

	Tray 1	Manual
Paper size	A4, Letter, Legal [1], B5 (ISO), Executive, A5, A6, B6 (ISO), Folio, Post Card	Width: 76.2 to 220mm (3 to 8.7 in.) Length: 116 to 406.4 mm (4.57 to 16 in.)
Number of sheets (80 g/m^2 / 20 lb)	250 sheets	Single sheet
Envelope size	N/A	COM10

[1] Legal size paper is not available in some regions outside the USA and Canada.

Recommended paper

	Europe	USA
Plain paper	Xerox Premier TCF 80 g/m^2 Xerox Business 80 g/m^2	Xerox 4200DP 20 lb Hammermill Laser Print (24 lb=90g/m2)
Recycled paper	Xerox Recycled Supreme 80 g/m^2	(No specific brand recommended)
Transparency	3M CG3300	3M CG3300
Labels	Avery laser label L7163	Avery laser labels white #5160
Envelope	Antalis River series (DL)	(No specific brand recommended)

- Before you buy a lot of paper, test a small quantity to make sure that the paper is suitable.
- Use paper that is made for plain-paper copying.
- Use paper that is 75 to 90 g/m^2 (20 to 24 lb).
- Use neutral paper. Do not use acidic or alkaline paper.
- Use long-grain paper.
- Use paper with a moisture content of approximately 5%.
- This printer can use recycled paper that meets DIN 19309 specifications.

CAUTION

DO NOT use ink jet paper because it may cause a paper jam or damage your printer.

Preprinted paper must use ink that can withstand the temperature of the printer's fusing process (200 degrees centigrade).

If you use bond paper, paper having a rough surface or paper that is wrinkled or creased, the paper may exhibit degraded performance.

Note

If you use paper that is not recommended, a paper jam or misfeed may occur in the printer.

(To help you choose which paper to use with this printer, see *Important information for choosing your paper on page 104*.)

Types of envelopes

Most envelopes will be suitable for your printer. However, some envelopes may have feed and print quality problems due to the way they have been made. A suitable envelope should have edges with straight, well-creased folds and the leading edge should not be thicker than two pieces of paper. The envelope should lie flat and not be of baggy or flimsy construction. You should buy quality envelopes from a supplier who understands that you will be using the envelopes in a laser printer. Before you print a lot of envelopes, test one to make sure that the print results are what you want.

Brother does not recommend a particular envelope because envelope manufacturers may change the envelope specifications. You are responsible for the quality and performance of the envelopes you use.

- Do not use damaged, curled, wrinkled, irregularly shaped, extremely shiny or textured envelopes.
- Do not use envelopes with clasps, snaps, tie strings, self-adhesive components, windows, holes, cutouts or perforations.
- Do not use envelopes that are of a baggy construction, not sharply creased, embossed (have raised writing on them) or pre-printed on the inside.
- Do not use envelopes that were previously printed by a laser printer.
- Do not use envelopes that are made of paper that weighs more than the paper weight specifications for the printer.
- Do not use envelopes that have been badly made, with edges that are not straight or consistently square.

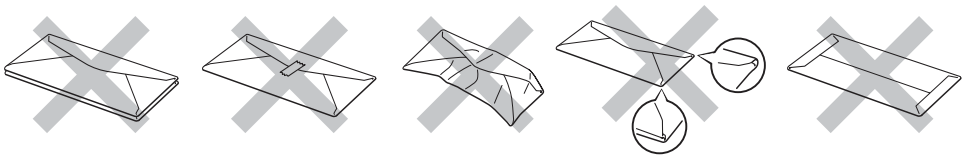

If you use any of the types of envelopes listed above, they may damage your printer. This damage is not covered under any Brother warranty or service agreement.

Note

- Do not put different types of paper in the paper tray at the same time because it may cause paper jams or misfeeds.
- Do not print envelopes using manual duplex printing.
- You must choose the same paper size from your application as the paper or envelope you are using.

Unprintable area

The area of the paper that cannot be printed on is shown in the table below:

Portrait

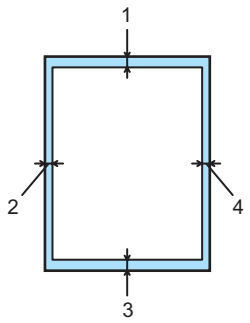

	A4	Letter	Legal	B5 (ISO)	Executive	A5	A6	B6
1	4.23 mm (0.16 in.)	4.23 mm (0.16 in.)	4.23 mm (0.16 in.)	4.23 mm (0.16 in.)	4.23 mm (0.16 in.)	4.23 mm (0.16 in.)	4.23 mm (0.16 in.)	4.23 mm (0.16 in.)
2	6.01 mm (0.24 in.)	6.35 mm (0.25 in.)	6.35 mm (0.25 in.)	6.01 mm (0.24 in.)	6.35 mm (0.25 in.)	6.01 mm (0.24 in.)	6.01 mm (0.24 in.)	6.01 mm (0.24 in.)
3	4.23 mm (0.16 in.)	4.23 mm (0.16 in.)	4.23 mm (0.16 in.)	4.23 mm (0.16 in.)	4.23 mm (0.16 in.)	4.23 mm (0.16 in.)	4.23 mm (0.16 in.)	4.23 mm (0.16 in.)
4	6.01 mm (0.24 in.)	6.35 mm (0.25 in.)	6.35 mm (0.25 in.)	6.01 mm (0.24 in.)	6.35 mm (0.25 in.)	6.01 mm (0.24 in.)	6.01 mm (0.24 in.)	6.01 mm (0.24 in.)

Landscape

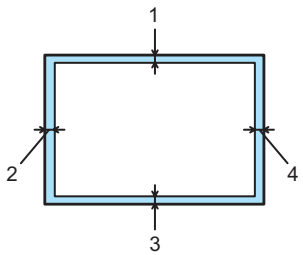

	A4	Letter	Legal	B5 (ISO)	Executive	A5	A6	B6
1	4.23 mm (0.16 in.)	4.23 mm (0.16 in.)	4.23 mm (0.16 in.)	4.23 mm (0.16 in.)	4.23 mm (0.16 in.)	4.23 mm (0.16 in.)	4.23 mm (0.16 in.)	4.23 mm (0.16 in.)
2	5.0 mm (0.19 in.)	5.08 mm (0.2 in.)	5.08 mm (0.2 in.)	5.0 mm (0.19 in.)	5.08 mm (0.2 in.)	5.0 mm (0.19 in.)	5.0 mm (0.19 in.)	5.0 mm (0.19 in.)
3	4.23 mm (0.16 in.)	4.23 mm (0.16 in.)	4.23 mm (0.16 in.)	4.23 mm (0.16 in.)	4.23 mm (0.16 in.)	4.23 mm (0.16 in.)	4.23 mm (0.16 in.)	4.23 mm (0.16 in.)
4	5.0 mm (0.19 in.)	5.08 mm (0.2 in.)	5.08 mm (0.2 in.)	5.0 mm (0.19 in.)	5.08 mm (0.2 in.)	5.0 mm (0.19 in.)	5.0 mm (0.19 in.)	5.0 mm (0.19 in.)

Printing methods

Printing on plain paper and transparencies

Printing on plain paper and transparencies from the paper tray

(For the recommended paper to use, see *About paper* on page 5.)

1. Pull the paper tray completely out of the printer.

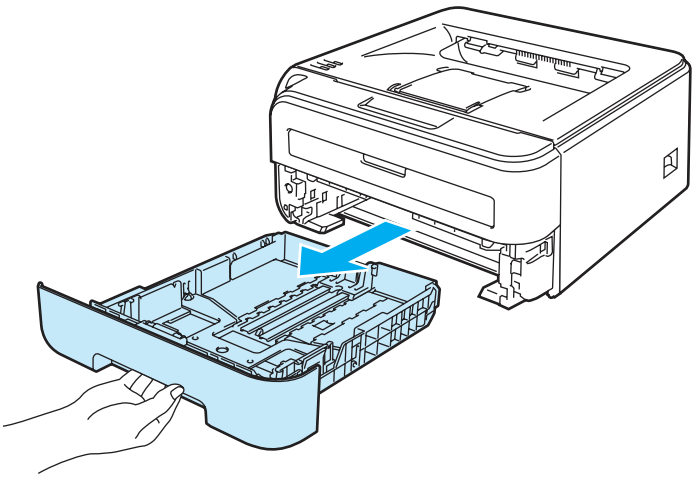

2. While pressing the green paper-guide release lever, slide the paper guides to fit the paper size. Make sure that the guides are firmly in the slots.

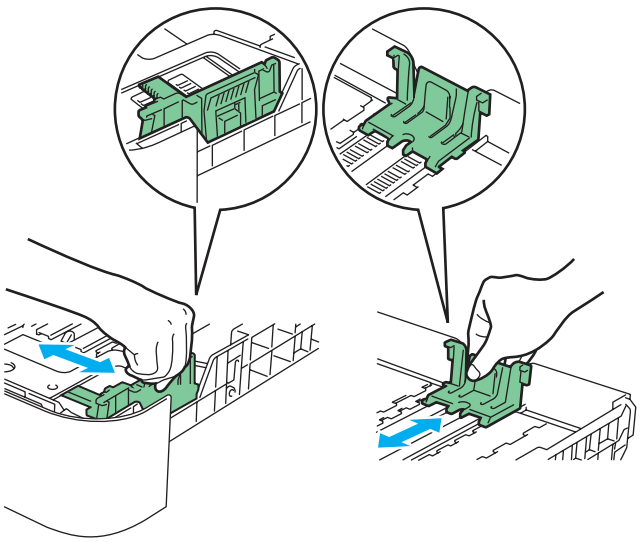

Note

For Legal size paper, press the release button in the bottom of the paper tray and then pull out the back of the paper tray. (Legal size paper is not available in some regions.)

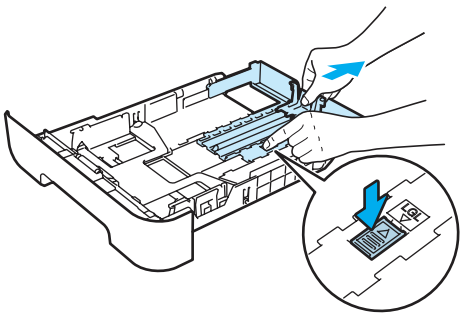

3 Put paper in the tray, and make sure that the paper is below the maximum paper mark (1). The side to be printed on must be face down.

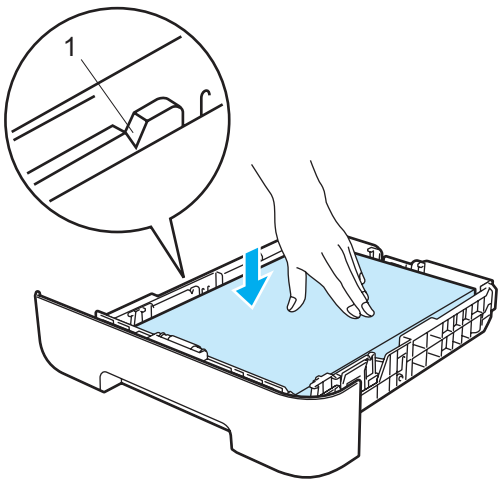

CAUTION

Make sure the paper guides touch the sides of the paper so it will feed properly. If you do not this, it may cause damage to your printer.

4 Put the paper tray firmly back in the printer. Make sure that it is completely inserted into the printer.

5 Lift up the support flap 1 (1) to prevent paper from sliding off the face-down output tray.

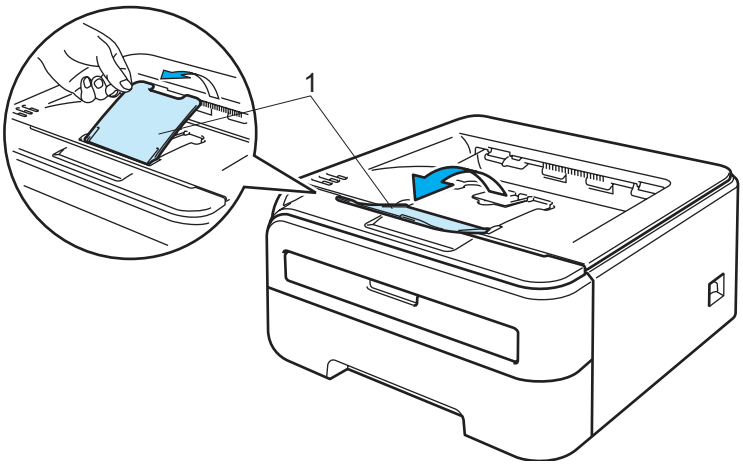

6 Choose the following from the printer driver:
Paper Size .....(1)
Media Type .....(2)
Paper Source .....(3)
and any other settings.

■ **Windows® printer driver**

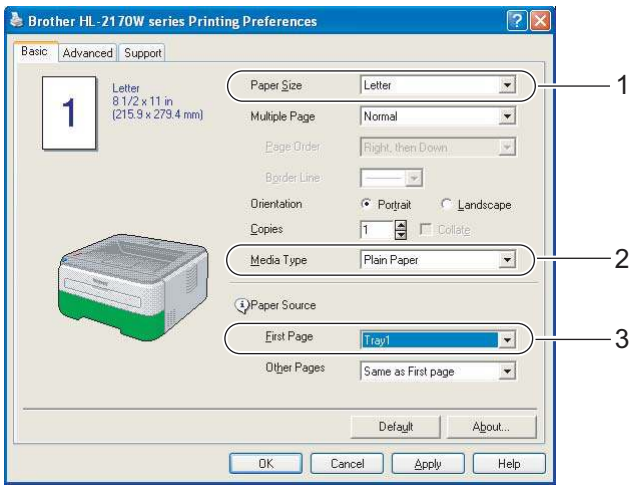

■ Macintosh® printer driver

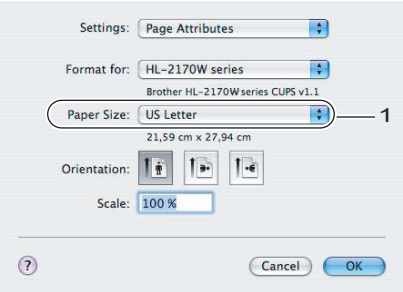

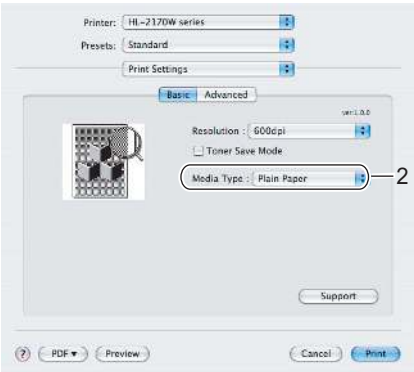

7 Send the print data to the printer.

Note

- The Error LED on the control panel will light up to indicate **No paper** if the power switch is turned on before you put paper or transparencies in the tray. You can clear this error indication by pressing **Go**.

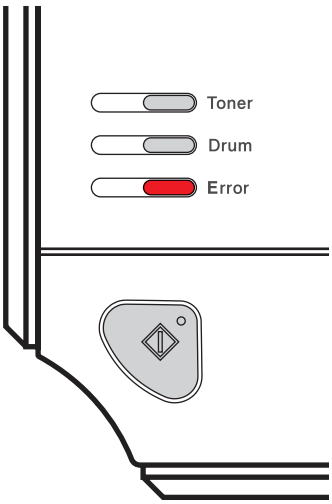

- When printing on transparencies, remove each transparency as soon as it has been printed. Stacking the printed transparencies may cause a paper jam or the transparency to curl.

Printing on plain paper, bond paper or transparencies from the Manual feed slot

(For the recommended paper to use, see *About paper* on page 5.)

Note

The printer automatically turns on the Manual Feed mode when you put paper in the manual feed slot.

1. Lift up the support flap 1 (1) to prevent paper from sliding off the face-down output tray, or remove each page as soon as it comes out of the printer.

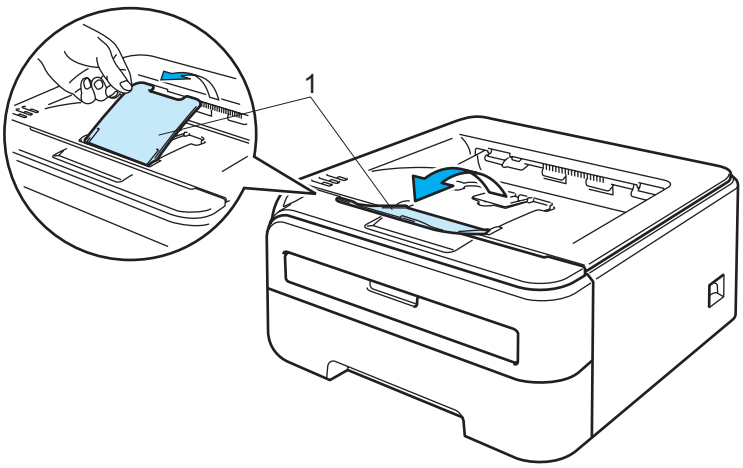

2. Open the manual feed slot cover.

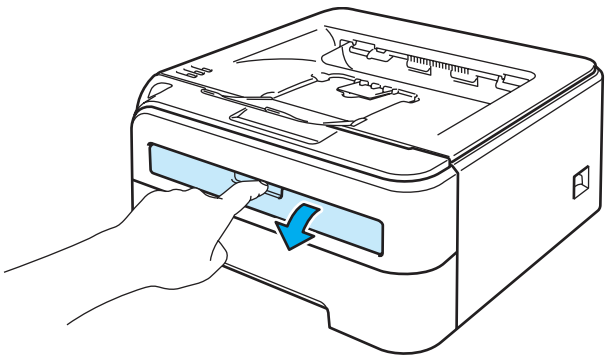

3. Using both hands, slide the manual feed slot paper guides to the width of the paper that you are going to use.

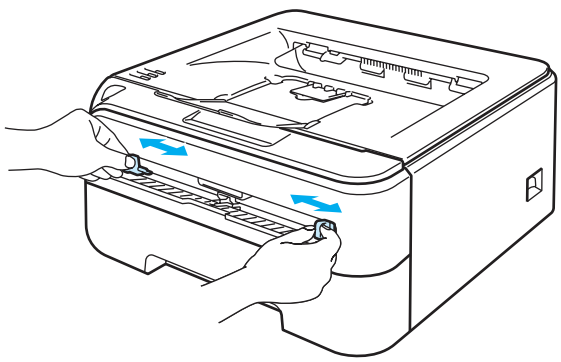

4 Using both hands, put one piece of paper or one transparency in the manual feed slot until the front edge of the paper or transparency touches the paper feed roller. When you feel the machine pull in the paper, let go.

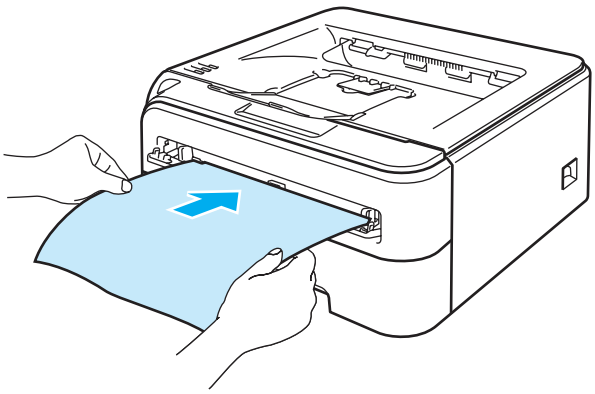

Note

- Put the paper into the manual feed slot with the side to be printed face up.
- Make sure that the paper or transparency is straight and in the correct position on the manual feed slot. If it is not, the paper or the transparency may not be fed properly, resulting in a skewed printout or a paper jam.
- Do not put more than one piece of paper in the manual feed slot at any one time, as it may cause a jam.
- If you put any media (paper, transparency and so on) in the manual feed slot before the printer is in the Ready state, the media may be ejected without being printed on.

5 Choose the following from the printer driver:
Paper Size .....(1)
Media Type .....(2)
Paper Source .....(3)
and any other settings.

■ **Windows® printer driver**

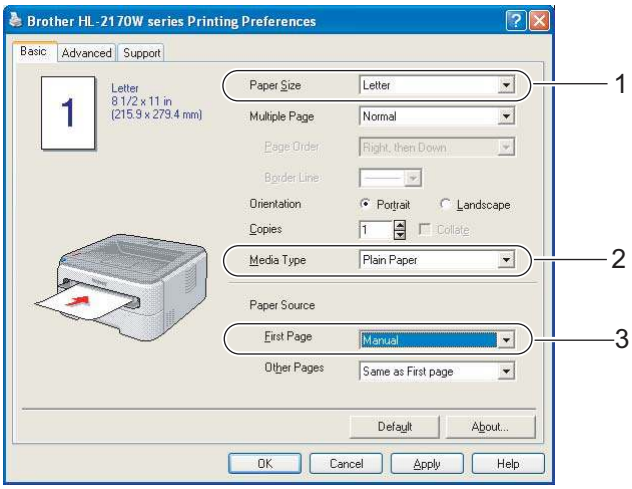

■ **Macintosh® printer driver**

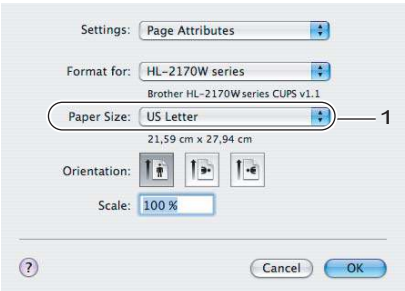

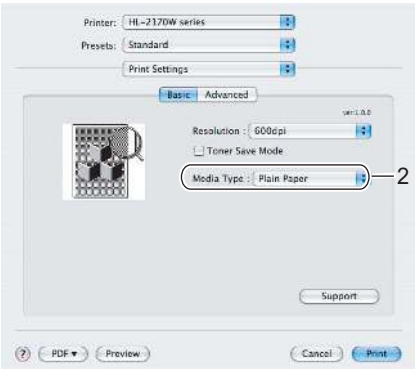

6 Send the print data to the printer.

7 After the printed page comes out of the printer, put in the next sheet of paper or transparency as in Step ❹ above. Repeat for each page that you want to print.

Note

- The Error LED on the control panel will flash to indicate **No paper** in the manual feed slot until you put a sheet of paper or transparency in the manual feed slot.

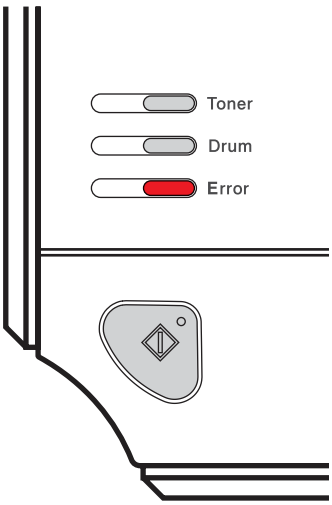

- When printing on transparencies, remove each transparency as soon as it has been printed. Stacking the printed transparencies may cause a paper jam or transparency to curl.

Printing on thick paper, labels and envelopes

When the back output tray is pulled down, the printer has a straight paper path from the manual feed slot through to the back of the printer. Use this paper feed and output method when you want to print on thick paper, labels or envelopes. (For the recommended paper to use, see *About paper* on page 5 and *Types of envelopes* on page 7.)

Note

The printer automatically turns on the Manual Feed mode when you put paper in the manual feed slot.

1. Open the back cover (back output tray).

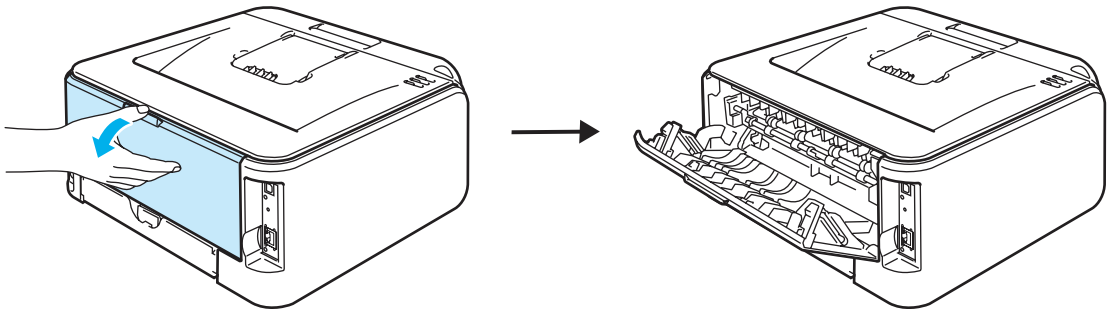

2. Open the manual feed slot cover.

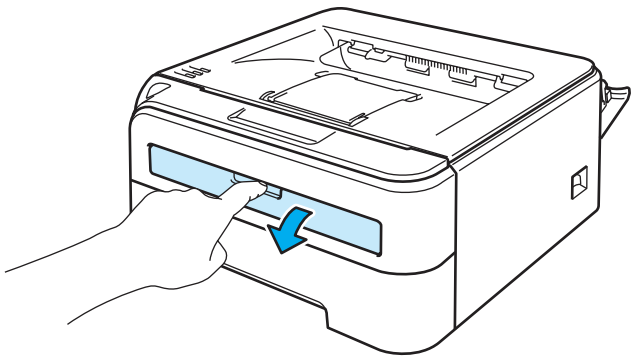

3. Using both hands, slide the manual feed slot paper guides to the width of the paper that you are going to use.

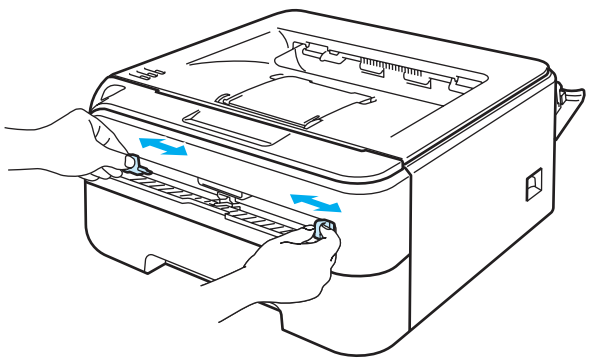

4 Using both hands, put one piece of paper or one envelope in the manual feed slot until the front edge of the paper or envelope touches the paper feed roller. When you feel the machine pull in the paper, let go.

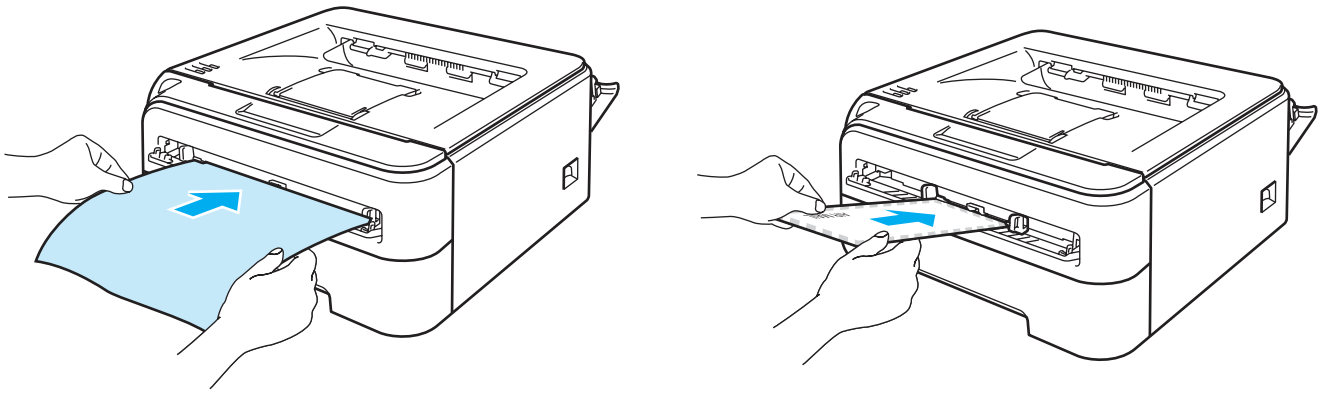

Note

- Put the paper into the manual feed slot with the side to be printed face up.
- Make sure that the paper or envelope is straight and in the proper position on the manual feed slot. If it is not, the paper or the envelope may not be fed properly, resulting in a skewed printout or a paper jam.
- Do not put more than one piece of paper in the manual feed slot at any one time, as it may cause a jam.
- If you put any Media (paper, envelope and so on) in the manual feed slot before the printer is in the Ready state, the media may be ejected without being printed on.

5 Choose the following from the printer driver:
Paper Size .....(1)
Media Type .....(2)
Paper Source .....(3)
and any other settings.

■ **Windows® printer driver**

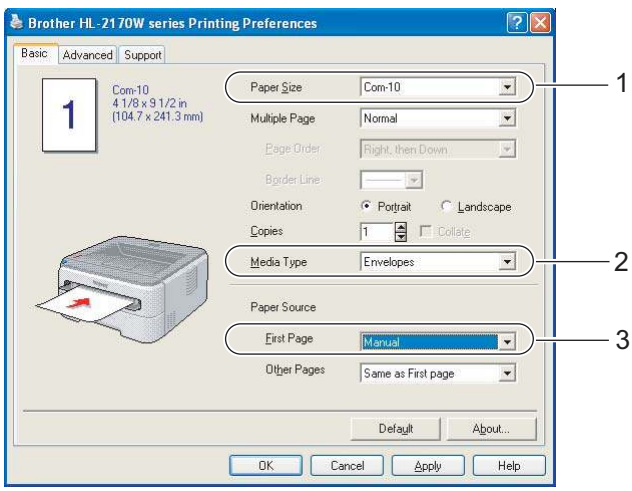

Note

- When you use Envelope #10, choose **Com-10** for the **Paper Size**.
- For other envelopes which are not listed in the printer driver, such as Envelope #9 or Envelope C6, choose **User Defined...** (For more information on envelope sizes, see *Paper size* on page 106.)

■ Macintosh® printer driver

Paper Size .....(1)
Media Type .....(2)
Paper Source .....(3)
and any other settings.

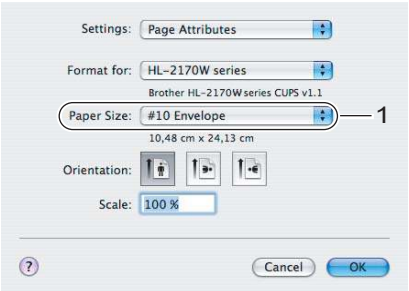

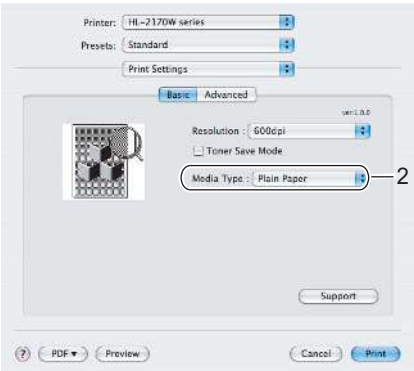

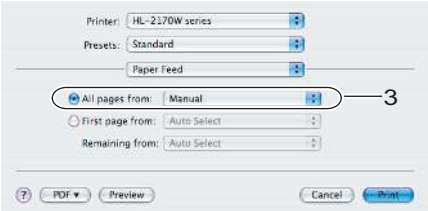

6 Send the print data to the printer.

7 After the printed page comes out of the printer, put in the next sheet of paper or envelope as shown in Step ❹. Repeat for each page that you want to print.

Note

- The Error LED on the control panel will flash to indicate **No paper** in the manual feed slot until you put a sheet of paper or envelope in the manual feed slot.

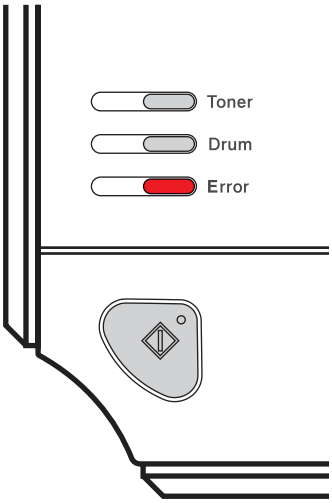

- Remove each sheet or envelope as soon as it has been printed. Stacking sheets or envelopes may cause the paper to jam or curl.

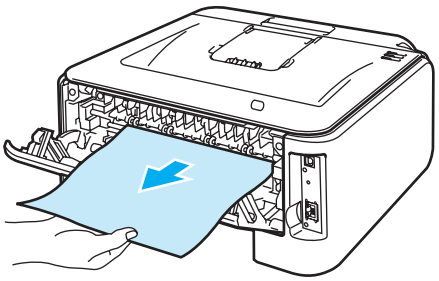

Note

- If an envelope is creased after it is printed, turn the next one around 180° when you put it in the manual feed slot, and then in the printer driver choose the **Advanced** tab, select **Page Setting**, and check the **Reverse Print** box. As an alternative you can change the printing direction in your software application.

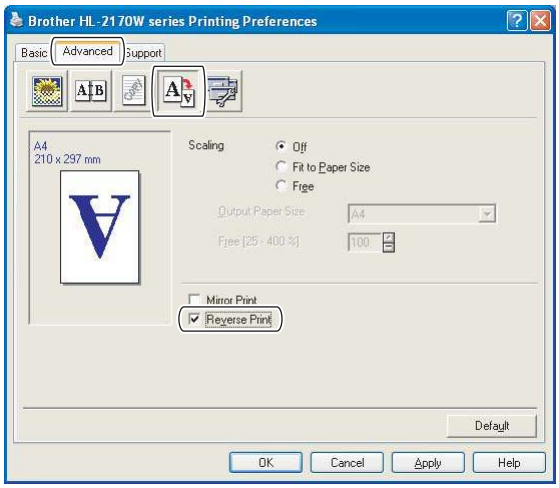

- If the DL size double flap envelope is creased after printing, choose **DL Long Edge** in **Paper Size**, from the **Basic** tab. Put a new DL size double-flap envelope in the manual feed slot with the longest edge of the envelope in first, then print again.

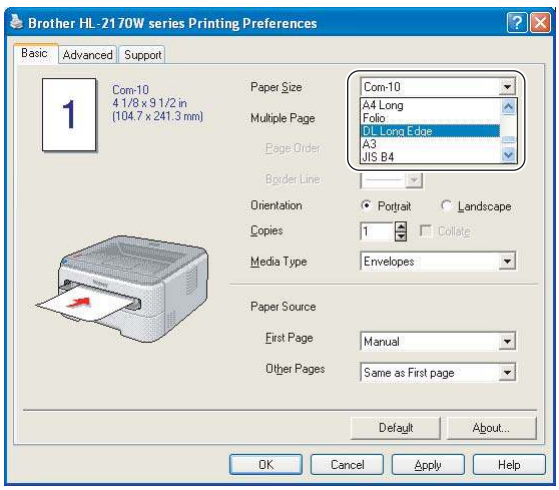

- If envelopes get smudged during printing set the **Media Type** to **Thick Paper** or **Thicker Paper** to increase the fixing temperature.
- Envelope joints that are sealed by the manufacturer should be secure.
- All sides of the envelope should be properly folded without wrinkles or creases.

Duplex printing

The supplied printer drivers for Windows® 2000/XP/XP Professional x64 Edition, Windows Vista®, Windows Server® 2003/Windows Server® 2003 x64 Edition and Mac OS® X 10.3 or greater all enable duplex printing. For more information about how to choose the settings, see the **Help** text in the printer driver.

Guidelines for printing on both sides of the paper

- If the paper is thin, it may wrinkle.
- If paper is curled, flatten it and then put it back in the paper tray or the manual feed slot.
- If the paper is not feeding properly, it may be curled. Remove the paper and straighten it.
- When you use the manual duplex function, it is possible that there may be paper jams or poor print quality. (If there is a paper jam, see *Paper jams and how to clear them* on page 85. If you have a print quality problem, see *Improving the print quality* on page 91.)

Note

- The screens in this section are from Windows® XP. The screens on your computer may vary depending on your operating system.
- Make sure that the paper tray is completely inserted into the printer.
- You should use plain paper, recycled paper or thin paper. Do not use bond paper.

Printing on both sides of the paper (manual duplex printing)

- If you are using the Macintosh® printer driver, see *Duplex Printing* on page 41.

Manual duplex printing from the paper tray

1. In the printer driver choose the **Advanced** tab, click the Duplex icon, and then choose the **Manual Duplex** printing mode, and from the **Basic** tab choose the Paper Source to be **Tray1**.
2. Send the data to the printer, then click **OK** on the computer screen.
   The printer will automatically print all the even-numbered pages on one side of the paper first.

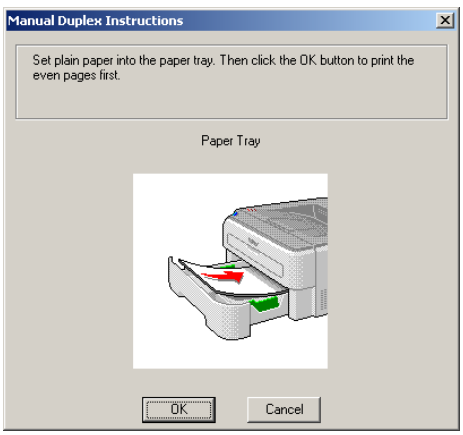

3 Remove the printed even-numbered pages from the output tray and put them back in the paper tray with the side to be printed on (blank side) face down. Follow the instructions on the computer screen.

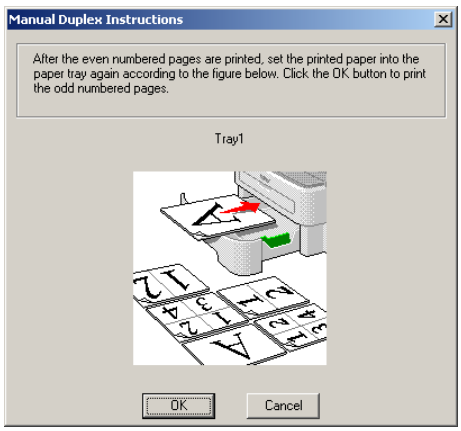

4 The printer will now automatically print all the odd-numbered pages on the other side of the paper.

Note

When you put paper in the paper tray, first empty the tray. Next, put the printed pages in the tray, with the printed side face up. (Do not add the printed pages to the top of a stack of unprinted paper.)

Manual duplex printing from the manual feed slot

Note

You should use plain paper and recycled paper. Do not use bond paper.

1 In the printer driver choose the **Advanced** tab, click the Duplex icon, then choose the **Manual Duplex** printing mode, and then from the **Basic** tab choose the **Paper Source** to be **Manual feed**.

2 Open the manual feed slot cover.

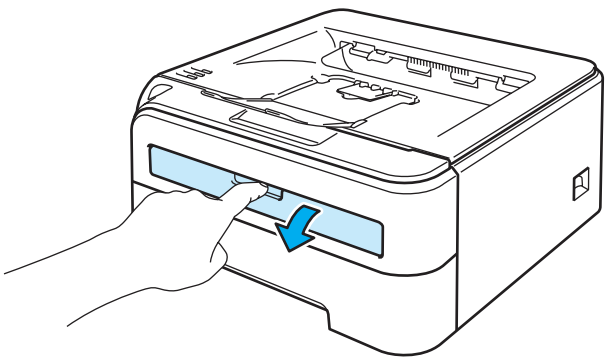

3 Using both hands, slide the manual feed slot paper guides to the width of the paper that you are going to use.

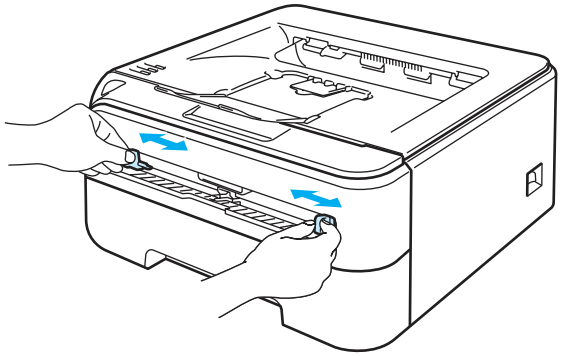

4 Using both hands put the paper in the manual feed slot with the side that is going to be printed on first facing up. Follow the instructions on the computer screen. Repeat this step until you have printed all the even-numbered pages.

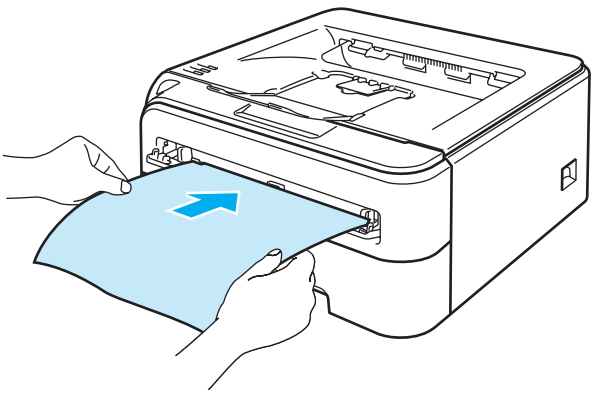

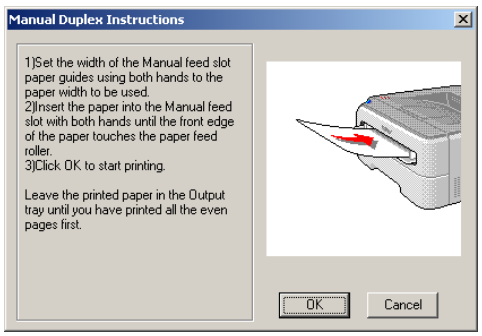

5 Remove the printed even-numbered pages from the output tray, and then put the first of the printed sheets back into the manual feed slot with the side to be printed on (the blank side) face up. Follow the instructions on the computer screen.

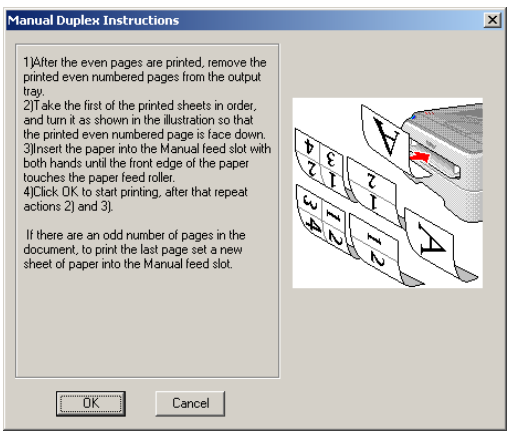

6 Repeat Step ❺ until you have printed all the odd-numbered pages.

Paper orientation for manual duplex printing

The printer prints the second page first.

If you print 10 pages on 5 sheets of paper, it will print page 2 and then page 1 on the first sheet of paper. It will print page 4 and then page 3 on the second sheet of paper. It will print page 6 and then page 5 on the third sheet of paper, and so on.

When doing manual duplex printing, the paper must be put in the paper tray in the following way:

- For the paper tray:
  - Put the side to be printed on face down with the leading edge (top) of the paper at the front of the tray.
  - To print on the second side, put the paper face up, with the leading edge (top) of the paper at the front of the tray.
  - If letterhead paper is used, put the paper in the tray with the heading face up at the front of the tray.
  - To print on the second side, put the heading face down at the front of the tray.
- For the manual feed slot:
  - Put the side to be printed on face up with the leading edge (top) of the paper in first.
  - To print on the second side, put the paper face down, with the leading edge (top) of the paper in first.
  - If letterhead paper is used, put it in with the heading face down and in first.
  - To print on the second side, put the heading face up and in first.

3 Driver and Software

Printer driver

A printer driver is software that translates data from the format used by a computer to the format that a particular printer needs. Typically, this format is page description language (PDL).

The printer drivers for the supported versions of Windows® and Macintosh® are on the CD-ROM we have supplied or on the Brother Solutions Center at http://solutions.brother.com. Install the drivers by following the Quick Setup Guide. The latest printer driver can be downloaded from the Brother Solutions Center at http://solutions.brother.com.

(If you want to uninstall the printer driver, see *Uninstalling the printer driver* on page 45.)

For Windows®

- Windows® printer driver (HL-2150N / HL-2170W only)
- GDI printer driver for Windows® (HL-2140 only)

For Macintosh®

- Macintosh® printer driver

For Linux [1] [2]

- LPR printer driver
- CUPS printer driver

[1] Download the printer driver for Linux from http://solutions.brother.com or a link on the supplied CD-ROM.

[2] Depending on Linux distributions, the driver may not be available.

Note

- For more information about Linux printer driver, visit us at http://solutions.brother.com.
- The printer driver for Linux may be released after the initial release of this product.

	Windows® printer driver (HL-2150N/ HL-2170W Only)	GDI printer driver for Windows® (HL-2140 Only)	Macintosh® printer driver	LPR / CUPS printer driver [1]
Windows® 2000 Professional	ⓘ	ⓘ		
Windows® XP Home Edition	ⓘ	ⓘ		
Windows® XP Professional	ⓘ	ⓘ		
Windows Vista®	ⓘ	ⓘ		
Windows Server® 2003	ⓘ	ⓘ		
Windows® XP Professional x64 Edition	ⓘ	ⓘ		
Windows Server® 2003 x64 Edition	ⓘ	ⓘ		
Mac OS® X 10.2.4 or greater			ⓘ	
Linux (Mandrake, Red Hat, SuSE Linux, Debian) [1]				ⓘ

[1] Download the printer driver from http://solutions.brother.com or a link on the supplied CD-ROM.
If you download from a link on CD-ROM, click **Install Other Drivers or Utilities**, then click **For Linux users** on the screen menu. Access to internet is required.

You can change the following printer settings when you print from your computer.

- Paper Size
- Multiple Page
- Orientation
- Copies
- Media Type
- Paper Source
- Resolution
- Toner Save Mode
- Print Setting
- Manual Duplex printing [1]
- Watermark [2]
- Scaling
- Job Spooling [2]
- Quick Print Setup [2]
- Sleep Time
- Macro [2] [3]
- Header-Footer Print [2]
- Density adjustment [2]
- Error Message Printout [2]
- Improve Print Output

[1] These settings are not available with the Mac OS® 10.2.4.

[2] These settings are not available with the Macintosh® printer driver.

[3] These settings are not available with the HL-2140.

Features in the printer driver (for Windows®)

(For more information, see the **Help** text in the printer driver.)

Note

- The screens in this section are from Windows® XP. The screens on your computer will vary depending on your operating system.
- If you are using Windows® 2000, XP, Windows Vista® or Windows Server® 2003, you can access the **Printing Preferences** dialog box by clicking **Printing Preferences...** in the **General** tab of the **Printer Properties** dialog box.

Basic tab

You can also change settings by clicking the illustration on the left side of the **Basic** tab.

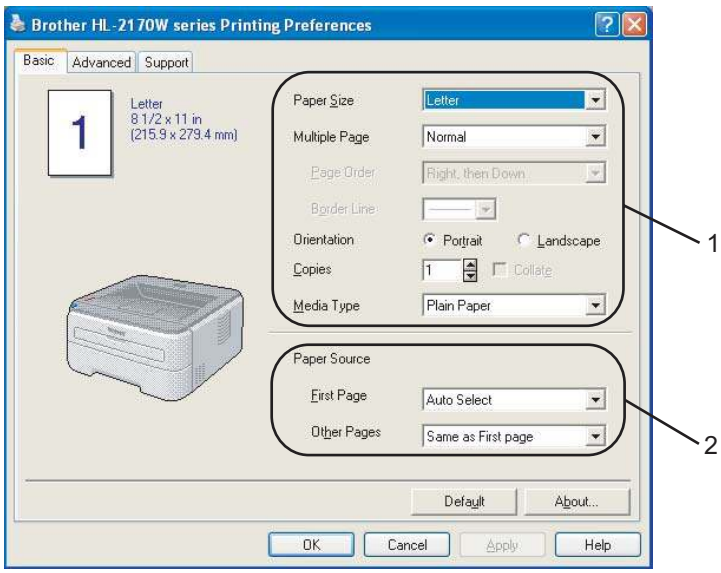

1. Choose the **Paper Size**, **Multiple Page**, **Orientation**, **Copies** and **Media Type** (1).
2. Choose the **Paper Source** (2).
3. Click **OK** to apply your chosen settings.
   To return to the default settings, click **Default**, then **OK**.

Paper Size

From the drop-down box choose the Paper Size you are using.

Multiple Page

The Multiple Page selection can reduce the image size of a page allowing multiple pages to be printed on one sheet of paper or can enlarge the image size for printing one page on multiple sheets of paper.

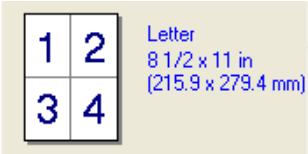

Page Order

When N in 1 option is selected, the page order can be selected from the drop-down list.

Border Line

When printing multiple pages on one sheet with the Multiple Page feature you can choose to have a solid border, dash border or no border around each page on the sheet.

Orientation

Orientation selects the position of how your document will be printed (**Portrait** or **Landscape**).

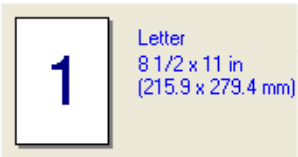

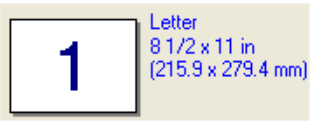

Copies

The copies selection sets the number of copies that will be printed.

Collate

With the Collate check box selected, one complete copy of your document will be printed and then will be repeated for the number of copies you selected. If the Collate check box is not selected, then each page will be printed for all the copies selected before the next page of the document is printed.

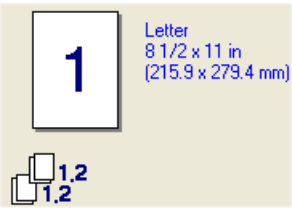

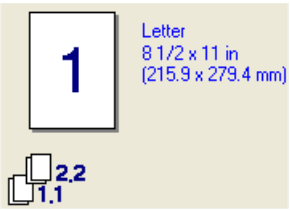

Media Type

You can use the following types of media in your printer. For the best print quality, select the type of media that you wish to use.

Plain Paper	**Thin Paper**	**Thick Paper**	**Thicker Paper**	**Bond Paper**	**Transparencies**
Envelopes	**Env. Thick**	**Env. Thin**	**Recycled Paper**		

Note

- When using ordinary plain paper (72.5 g/m^2 to 95 g/m^2 / 19 to 25 lb) choose **Plain Paper**. When using heavier weight paper or rough paper choose **Thick Paper** or **Thicker Paper**. For bond paper, choose **Bond Paper**.
- When you use envelopes, choose **Envelopes**. If the toner is not fixed to the envelope correctly when **Envelopes** has been selected, choose **Env. Thick**. If the envelope is crumpled when **Envelopes** has been selected, choose **Env.Thin**.

Paper Source

You can choose **Auto Select**, **Tray1**, **Manual** and specify separate trays for printing the first page and for printing from the second page onwards.

Note

The printer automatically turns on the Manual Feed mode when you put paper in the manual feed slot.

Advanced tab

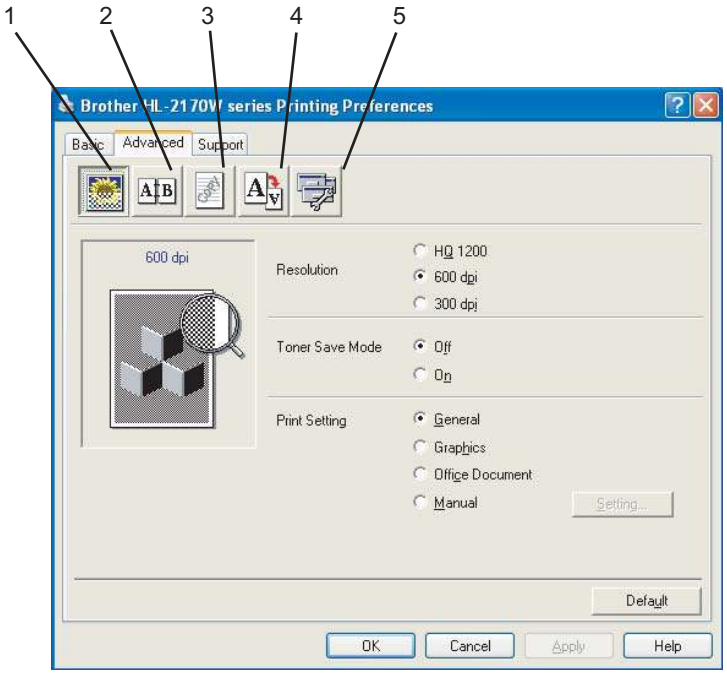

Change the tab settings by clicking one of the following icons:

- Print Quality (1)
- Duplex (2)
- Watermark (3)
- Page Setting (4)
- Device Options (5)

Print Quality

- **Resolution**

  You can change the resolution as follows:

  - HQ 1200
  - 600 dpi
  - 300 dpi

- **Toner Save Mode**

You can save running costs by turning on the **Toner Save Mode**, which reduces the print density (print appears lighter).

Note

- We do not recommend **Toner Save Mode** for printing Photo or Gray Scale images.
- **Toner Save Mode** is not available for **HQ 1200** resolution.

■ Print Setting

You can manually change the print setting.

- **General**

  This is a printing mode for general printing of documents.

- **Graphics**

  This is the best mode for printing documents that contain graphics.

- **Office Document**

  This is the best mode for printing office documents.

- **Manual**

  You can change the settings manually by choosing **Manual** and clicking the **Setting...** button. You can set brightness, contrast and other settings.

Duplex Printing

■ Manual Duplex

Check the **Duplex** box and choose **Manual Duplex**. In this mode, the printer prints all the even numbered pages first. Then the printer driver will stop and show the instructions required to re-install the paper. When you click **OK** the odd numbered pages will be printed. There are six types of manual duplex binding directions available for each orientation.

■ Booklet Printing

When you want to print a booklet, use this function. To make the Booklet, fold the printed pages down the middle, when using the booklet printing function.

■ Binding Offset

If you check the Binding Offset option, you can also specify the offset for binding in inches or millimeters.

Watermark

You can put a logo or text into your documents as a watermark.

You can choose one of the preset watermarks, or you can use a bitmap file or text file that you have created.

When you use a bitmap file as a watermark, you can change the size of the watermark and put it anywhere you like on the page.

When you use text as a watermark, you can change the font, darkness and angle settings.

Page Setting

You can change the print image scaling and choose **Mirror/Reverse print** options.

Device Options

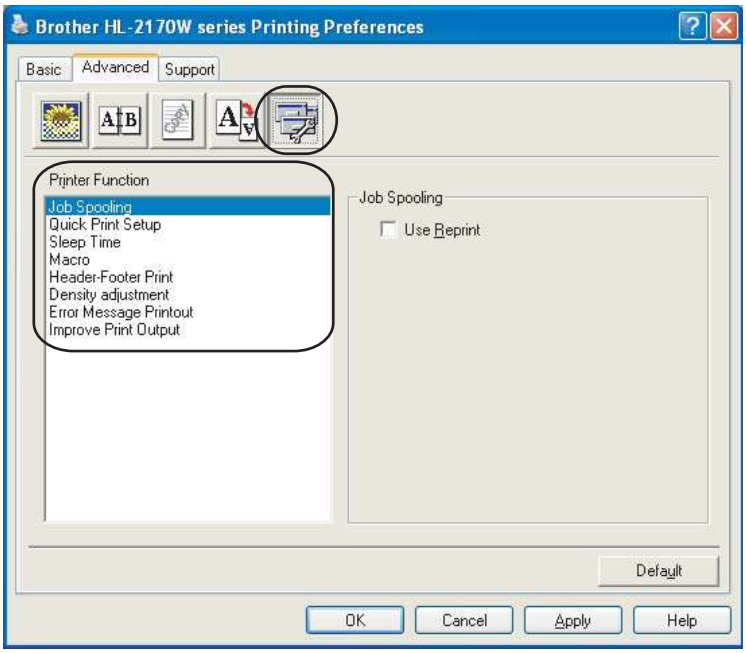

You can set the following in **Printer Function**:

- Job Spooling
- Quick Print Setup
- Sleep Time
- Macro (HL-2150N / HL-2170W only)
- Header-Footer Print
- Density adjustment
- Error Message Printout
- Improve Print Output

Job Spooling

The printer keeps the last print job sent to it in memory.

To reprint the last document, press the **Go** button and hold it down for about 4 seconds until all the LEDs light up in order (**Toner**, **Drum**, **Error**, **Ready**), and then release the **Go** button. Within 2 seconds press the **Go** button the number of times you want to reprint. If you don't press the **Go** button within 2 seconds, a single copy will be printed.

Note

If you want to prevent other people from printing your data using the reprint function, uncheck the **Use Reprint** check box in the job spooling settings.

Quick Print Setup

This feature allows you to quickly choose driver settings by clicking a tasktray icon.

You can turn the quick print setting on or off. By placing a check in the selection boxes for the following functions you can choose which will be available in the quick print setting.

- Multiple Page
- Manual Duplex
- Toner Save Mode
- Paper Source
- Media Type

Sleep Time

When the printer does not receive data for a certain period of time, it enters sleep mode. In sleep mode, the printer acts as though it were turned off. When you choose **Printer Default**, the timeout setting has been set to a specific time set at the factory, this can be altered in the driver. Intelligent Sleep Mode automatically adjusts to the most suitable timeout setting depending on the frequency of your printer use.

While the printer is in sleep mode, the **Ready** LED lights up slightly, but the printer can still receive data. Receiving a print file or document or pressing the **Go** button will automatically wake up the printer to start printing.

To turn sleep mode off, from the **Advanced** tab, click the **Device Options** icon and choose **Sleep Time**. Double-click the word **Sleep Time**, and the Sleep Time Off function will appear. Click **Off** to stop the printer going into sleep mode. The Sleep Time Off function can be hidden by double-clicking the word Sleep Time again. We recommend that you keep sleep mode on for power saving.

Macro (HL-2150N / HL-2170W only)

You can save a page of a document as a macro to the printer's memory. You can also execute the saved macro (you can use the saved macro as an overlay on any document). This will save time and increase printing speed for often used information such as forms, company logos, letterhead formats or invoices.

Header-Footer Print

When this feature is enabled, it will print the date and time on your document from your computer's system clock and the PC login user name or the text you entered. By clicking **Setting**, you can customize the information.

- ID Print

  If you select **Login User Name**, your PC login user name will print. If you select **Custom** and enter the text in the **Custom** edit box, the text you entered will print.

Density adjustment

Increase or decrease the print density.

Note

The **Density adjustment** is not available when you set the **resolution** to **HQ 1200**.

Error Message Printout

You can choose whether the printer reports problems by printing an error page. For details, see *Error message printout* on page 82.

Selections are **Printer Default** (ON), **ON** and **OFF**.

Improve Print Output

This feature allows you to improve a print quality problem.

- Reduce Paper Curl

  If you choose this setting, the paper curl may be reduced.

  If you are printing only a few pages, you do not need to choose this setting. We recommend that you change the printer driver setting in **Media Type** to a thin setting.

- Improve Toner Fixing

  If you choose this setting, the toner fixing on paper may be improved. If this selection does not improve the situation enough, select **Thicker paper** in **Media type** settings.

Tray Settings tab

You can define the paper size for each paper tray and auto detect the serial number in the **Tray Settings** tab as follows.

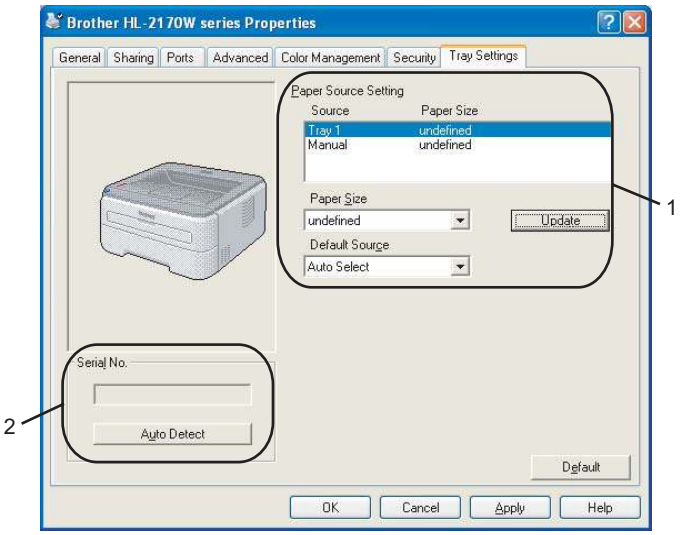

■ **Paper Source Setting** (1)

This feature identifies the paper size defined for each paper tray.

- **Paper Size**

  This setting allows you to define which paper size is used for the tray and manual feed slot. Highlight the paper source you want to define and then choose the paper size from the pull-down menu. Click **Update** to apply the setting to the paper source.

- **Default Source**

  This setting allows you to choose the default paper source that your document will be printed from. Choose the **Default Source** from the pull-down menu and click **Update** to save your setting. The **Auto Select** setting will automatically pull paper from any paper source (tray or manual feed slot) that has a defined paper size that matches your document.

■ **Serial No.** (2)

By clicking **Auto Detect**, the printer driver will probe the printer and display its serial number. If it fails to receive the information, the screen will display "---------".

Note

The **Auto Detect** function is not available under the following printer conditions:

- The printer power switch is off.
- The printer is in an error state.
- The printer is in a network shared environment.
- The cable is not connected to the printer correctly.

Support tab

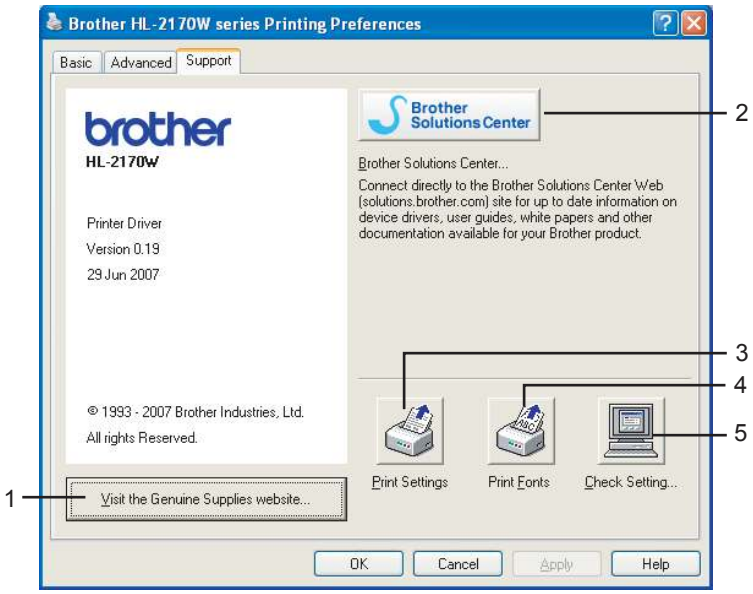

- **Visit the Genuine Supplies website** (1)

  You can visit our website for original/genuine Brother supplies by clicking this button.

- **Brother Solutions Center** (2)

  The Brother Solutions Center (http://solutions.brother.com) is a website offering information about your Brother product including FAQs (Frequently Asked Questions), User's Guides, driver updates and tips for using your printer.

- **Print Settings** (3)

  This will print the pages that show how the internal settings of the printer have been configured.

- **Print Fonts** (4) (HL-2150N / HL-2170W only)

  This will print the pages that show all the internal fonts of the printer.

- **Check Setting...** (5)

  You can check the current driver settings.

Features in the printer driver (for Macintosh®)

This printer supports Mac OS® X 10.2.4 or greater.

Note

The screens in this section are from Mac OS® X 10.4. The screens on your Macintosh® will vary depending on your operating system.

Page Setup

You can set the **Paper Size**, **Orientation** and **Scale**.

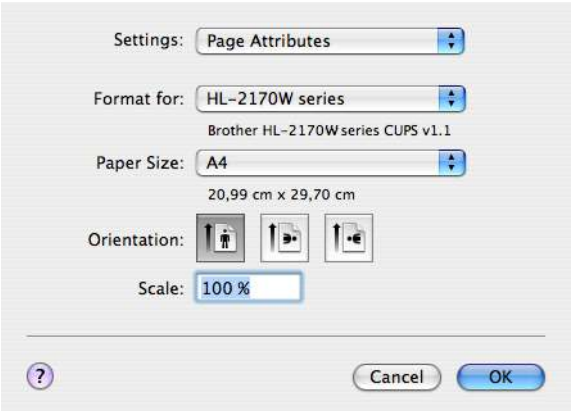

Copies & Pages

You can set the **Copies** and **Pages**.

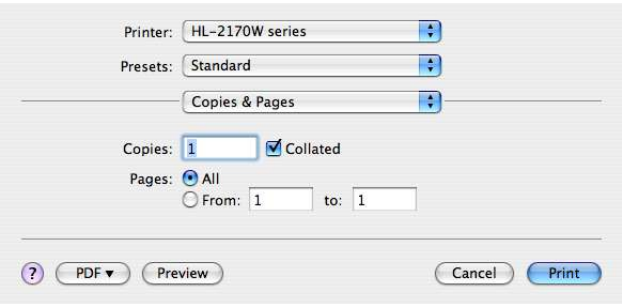

Cover Page (for Mac OS® X 10.4)

You can make the following cover page settings:

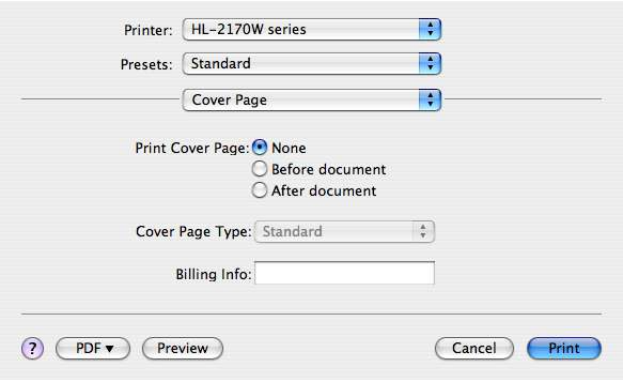

- **Print Cover Page**

  If you want to add a cover page to your document, use this function.

- **Cover Page Type**

  Choose a template for the cover page.

- **Billing Info**

  If you want to add the billing information to the cover page, enter text in the **Billing Info** box.

Layout

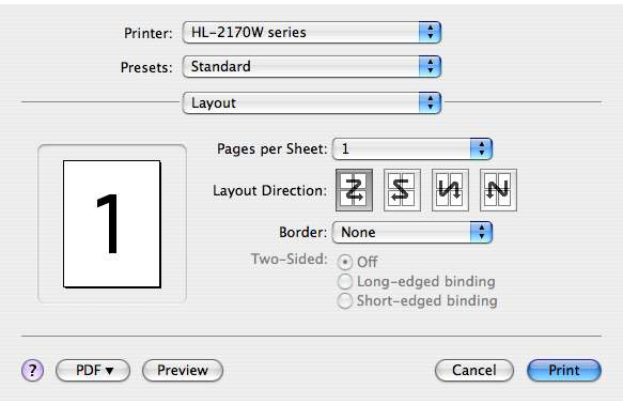

- **Pages per Sheet**

  Choose how many pages will appear on each side of the paper.

- **Layout Direction**

  When you specify the pages per sheet, you can also specify the direction of the layout.

- **Border**

  If you want to add a border, use this function.

Duplex Printing

■ Manual duplex (for Mac OS® X 10.3 or greater)

Select **Paper Handling**.

Choose **Odd numbered pages** and print, and then choose **Even numbered pages** and print.

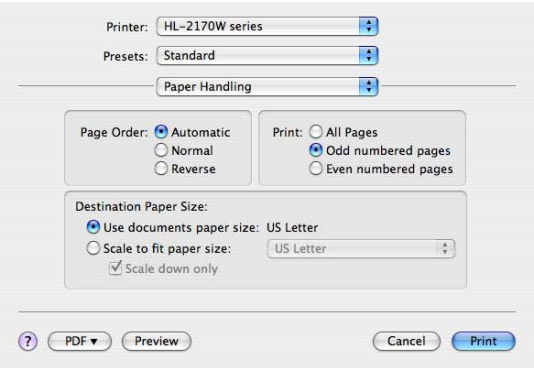

Print Settings

You can change settings by choosing a setting in the **Print Settings** list:

Basic tab

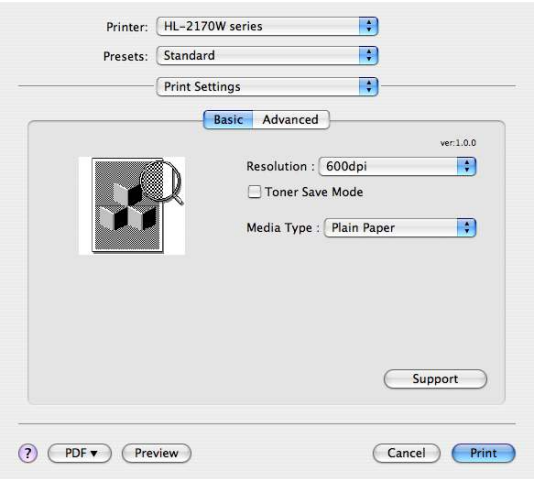

■ Resolution

You can change the resolution as follows:

- 300 dpi
- 600 dpi
- HQ 1200

Toner Save Mode

You can conserve toner using this feature. When you set **Toner Save Mode** to **On**, print appears lighter. The default setting is **Off**.

Note

- We do not recommend **Toner Save Mode** for printing Photo or Gray Scale images.
- **Toner Save Mode** is not available for **HQ 1200** resolution.

Media Type

You can change the media type to one of the following:

- Plain Paper
- Thin Paper
- Thick Paper
- Thicker Paper
- Bond Paper
- Transparencies
- Envelopes
- Env. Thick
- Env. Thin
- Recycled Paper

Support

You can visit the Brother Solutions Center (http://solutions.brother.com) and our website for original/genuine Brother supplies by clicking the **Support** button.

The Brother Solutions Center is a website offering information about your Brother product including FAQs (Frequently Asked Questions), User's Guides, driver updates and tips for using your printer.

Advanced tab

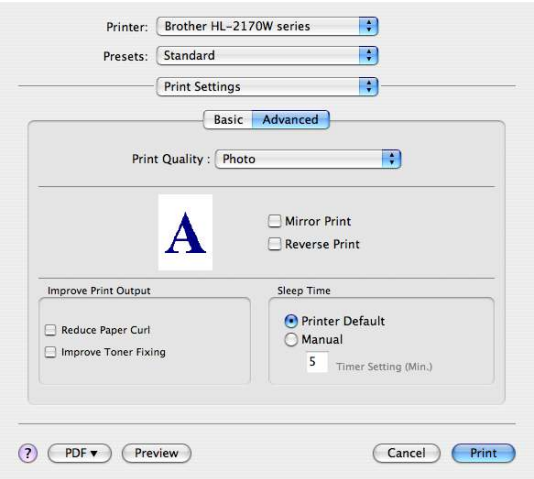

■ Print Quality

You can change the print quality as follows:

- Photo

  This is a photograph mode (gradation priority). Choose this setting for printing photographs that have continuous gradation. You can represent soft contrasts between various shades of gray.

- Graphics

  This is a graphics mode (contrast priority). Choose this setting for printing text and figures, such as business and presentation documents. You can represent sharp contrasts between shaded areas.

- Chart/Graph

  This is the best dither pattern for business documents such as presentations, that include words, graphs or charts. It is particularly suitable for solid colors.

■ Mirror Print

Check **Mirror Print** to reverse the data from left to right.

■ Reverse Print

Check **Reverse Print** to reverse the data from up to down.

■ Sleep Time

When the printer does not receive data for a certain period of time, it enters sleep mode. In sleep mode, the printer acts as though it were turned off. If you want to change the sleep time, choose **Manual** and then enter the time in the text box on the driver.

While the printer is in sleep mode, the **Ready** LED lights up slightly, but the printer can still receive data. Receiving a print file or document or pressing one of the buttons will automatically wake up the printer to start printing.

■ Improve Print Output

This feature allows you to improve a print quality problem.

- Reduce Paper Curl

  If you choose this setting, the paper curl may be reduced.

  If you are printing only a few pages, you do not need to choose this setting. We recommend that you change the printer driver setting in **Media Type** to a thin setting.

- Improve Toner Fixing

  If you choose this setting, the toner fixing on paper may be improved. If this selection does not improve the situation enough, select **thicker paper** in **media type** settings.

Status Monitor (For Mac OS® X 10.3 or greater users)

This reports the printer status (any errors that may happen with the printer) when printing. If you would like to turn the status monitor on, run the **Status Monitor** (from the **Macintosh HD** (Startup Disk), choose **Library**, **Printers**, **Brother**, **Utilities**).

Uninstalling the printer driver

You can uninstall the printer driver that you have installed with the following steps.

Note

- This is not available if you installed the printer driver from the Windows Add a printer function.
- After uninstalling, we recommend that you restart your computer to remove files that were in use during the uninstall.

Printer driver for Windows® and Windows Vista® and Windows Server® 2003

1. Click the **Start** button, point to **All Programs** [1]and then to your printer name.
2. Click **UnInstall**.
3. Follow the instructions on the screen.

[1] **Programs** for windows® 2000 users

Printer driver for Macintosh®

For Mac OS® X 10.2

1. Disconnect the USB cable between the Macintosh® and your printer.
2. Restart the Macintosh®.
3. Log on as an ‘Administrator’.
4. Run the **Print Center** (from the **Go** button menu, choose **Applications**, **Utilities**), then choose the printer you want to remove and remove it by clicking the **Delete** button.
5. Drag the **HL_MFLPro** folder (from the **Macintosh HD** (Startup Disk), choose **Library**, **Printers**, **Brother**) into the Trash and then empty the Trash.
6. Restart the Macintosh®.

For Mac OS® X 10.3 or greater

1. Disconnect the USB cable between the Macintosh® and your printer.
2. Restart the Macintosh®.
3. Log on as an ‘Administrator’.
4. Run the **Printer Setup Utility** (from the **Go** button menu, choose **Applications**, **Utilities**), then choose the printer you want to remove and remove it by clicking the **Delete** button.
5. Restart the Macintosh®.

Software

Software for network models (HL-2150N / HL-2170W only)

BRAdmin Light

BRAdmin Light is a utility for initial setup of Brother network connected devices. This utility can search for Brother products on your network, view the status and configure basic network settings, such as IP address. The BRAdmin Light utility is available for Windows® 2000/XP and Windows Vista® and Windows Server® 2003, and Mac OS® X 10.2.4 or greater computers. For installing BRAdmin Light, please see the Quick Setup Guide we provided with the printer. For Macintosh® users, BRAdmin Light will be installed automatically when you install the printer driver. If you have already installed the printer driver, you do not have to install it again. For more information on BRAdmin Light, visit us at http://solutions.brother.com.

BRAdmin Professional (for Windows®)

BRAdmin Professional is a utility for more advanced management of network connected Brother devices. This utility can search for Brother products on your network, view the status and configure the network settings from a computer running the Windows® system. BRAdmin Professional has additional features from BRAdmin Light.
For more information and to download the software, visit us at http://solutions.brother.com.

Web BRAdmin (for Windows®)

Web BRAdmin is a utility for managing network connected Brother devices. This utility can search for Brother products on your network, view the status and configure the network settings. Unlike BRAdmin Professional, which is designed for Windows® only, the Web BRAdmin is a server based utility that can be accessed from any client PC with a web browser that supports JRE (Java Runtime Environment). By installing the Web BRAdmin server utility on a computer running IIS [1], administrators can connect to the Web BRAdmin server using a web browser, which then communicates with the device itself.
For more information and to download the software, visit us at http://solutions.brother.com.

[1] Internet Information Server 4.0 or Internet Information Services 5.0 / 5.1 / 6.0 / 7.0

Web Based Management (web browser)

Web Based Management (web browser) is a utility for managing network connected Brother devices, using the HTTP (Hyper Text Transfer Protocol). This utility can view the status of Brother products on your network and configure the machine or network settings using a standard web browser that is installed on your computer.
For more information, see Chapter 13 of the Network User's Guide on the CD-ROM we have supplied.

Driver Deployment Wizard (for Windows®)

This installer includes the Windows® printer driver and Brother network port driver (LPR). If the administrator installs the printer driver and port driver using this application, the administrator can save the file to the file server or send the file by E-mail to users. Then, each user just clicks that file to have the printer driver, port driver, IP address, and so on, automatically copied to their computer.

Automatic interface selection (HL-2150N / HL-2170W only)

This printer has an automatic interface selection feature that is turned on by default. This lets it automatically change the interface to USB or Ethernet depending on which interface is receiving data.

Since the default setting is on for the automatic interface selection mode, simply connect the interface cable to the printer. Always turn off both your computer and printer when connecting or disconnecting the cable.

Note

This function takes a few seconds to work. If you want to speed up printing, choose the required interface manually by using Remote Printer Console. (See *Remote Printer Console* on page 47.)

If you typically use only one interface, we recommend that you choose that interface using Remote Printer Console. (See *Remote Printer Console* on page 47.). If only one interface is chosen, the printer will allocate the entire input buffer to that interface.

Remote Printer Console

Remote Printer Console is software to change many of the printer settings independently of your application. For example, you can change the settings for printer margin, sleep mode, character set and so on. These settings are then remembered and used by the printer.

How to use and install the Remote Printer Console software

To use the Remote Printer Console software, follow the steps below.

For Windows®

1. Put the CD-ROM into your CD-ROM drive and close the opening screen when it appears.
2. Open Windows® Explorer and choose the CD-ROM drive.
3. Double-click the **Tool** folder.
4. Double-click the **RPC** folder.
5. Refer to the **RPC_User's_Guide.pdf** for how to install and use the Remote Printer Console.

For Macintosh® (HL-2150N / HL-2170W only)

1. Put the CD-ROM into your CD-ROM drive. Double-click the **HL2100** icon on the desktop.
2. Double-click the **RPC** folder.
3. Refer to the **RPC_User's_Guide.pdf** for how to install and use the Remote Printer Console.

4 Control Panel

LEDs (Light Emitting Diodes)

This section refers to three LEDs **Toner**, **Drum** and **Error**, and a dual function **Ready** LED & **Go** button on the control panel.

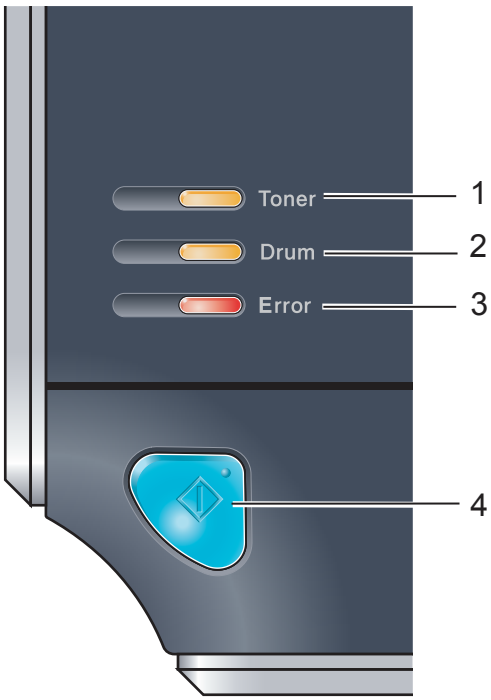

1 **Toner LED**

The Toner LED indicates when the Toner is low or at the end of its life.

2 **Drum LED**

The Drum LED indicates when the Drum is nearing the end of its life.

3 **Error LED**

The Error LED indicates when the printer is in one of the following states:

No paper / Paper jam / Cover open

4 **Ready LED**

The Ready LED will flash depending on the printer status.

Go button

Wake-up / Error recovery / Form feed / Job Cancel / Reprint

The LED indications shown in the table below are used in the illustrations in this chapter.

or	LED is off.
or or	LED is on.
	The LED is dimmed.
or or	LED is blinking.

LED	Printer status
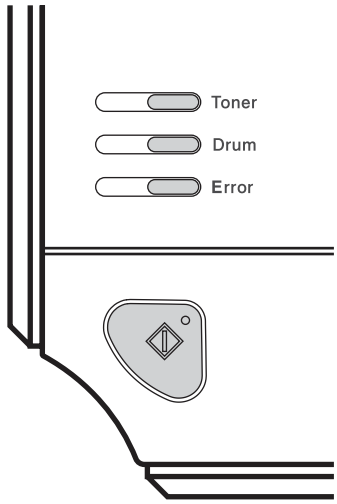	**Off** The power switch is off.
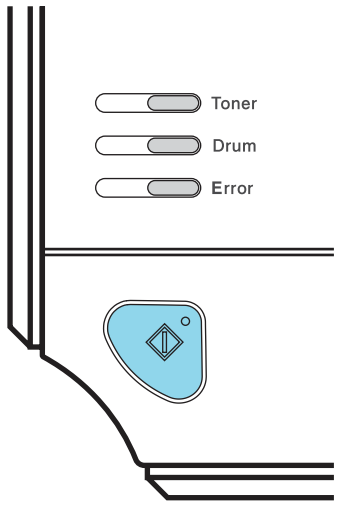	**Sleep mode** The printer is in sleep mode. Pressing the **Go** button wakes up the printer from sleep mode to ready mode.
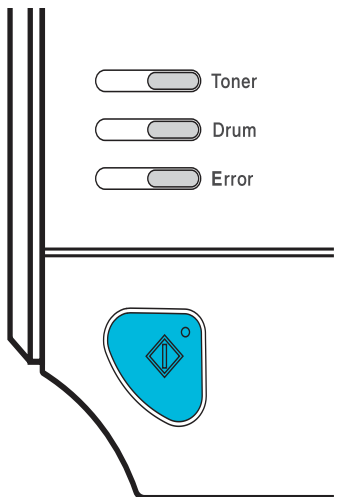	**Ready to print** The printer is ready to print.

LED	Printer status
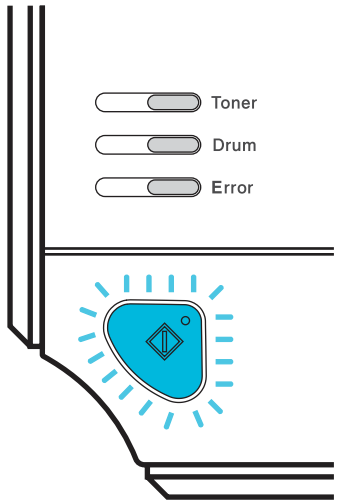	**Warming up** The printer is warming up.
	Cooling down The printer is cooling down. Wait for a few seconds until the inside of the printer has cooled down.
	Receiving data The printer is either receiving data from the computer, processing data in memory or printing the data.
	Data remaining in memory There is remaining print data in the printer memory. If the **Ready** LED is blinking for a long time and nothing has printed, press the **Go** button to print the remaining data in the memory.
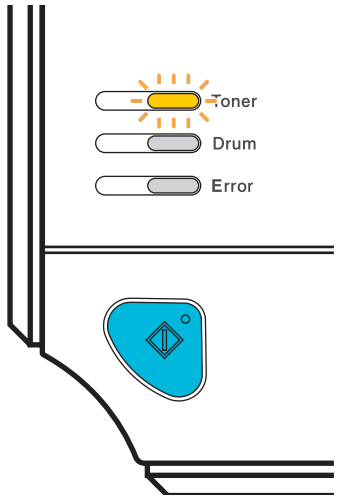	**Toner low** Indicates that the toner cartridge is nearly empty. Buy a new toner cartridge and have it ready for when **Toner life end** is indicated. The **Toner** LED will turn on for 2 seconds and off for 3 seconds.
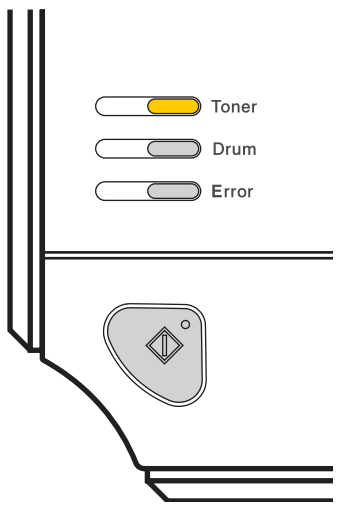	**Toner life end** Replace the toner cartridge with a new one. See *Replacing the toner cartridge* on page 62.
	Cartridge error The drum unit assembly is not installed correctly. Take the drum unit out of the machine and put it back in.

LED	Printer status
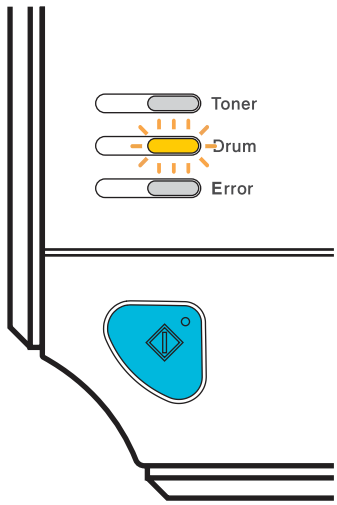	**Drum life end soon** The drum unit is near the end of its life. We recommend that you get a new drum unit to replace the current one. See *Replacing the drum unit* on page 69. The **Drum** LED will turn on for 2 seconds and off for 3 seconds.
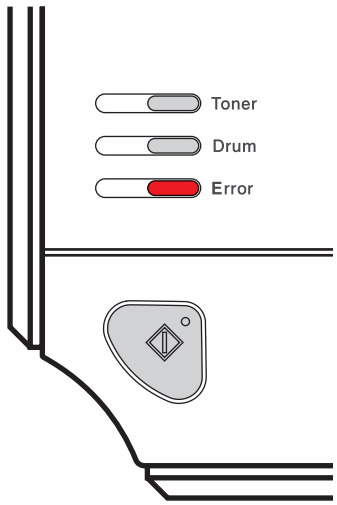	**No paper fed tray1** Put paper in the tray. Then press the **Go** button. See *Printing on plain paper and transparencies* on page 9.
	No paper fed manual feed slot Put paper in the manual feed slot. See *Printing on plain paper and transparencies* on page 9 or *Printing on thick paper, labels and envelopes* on page 17.
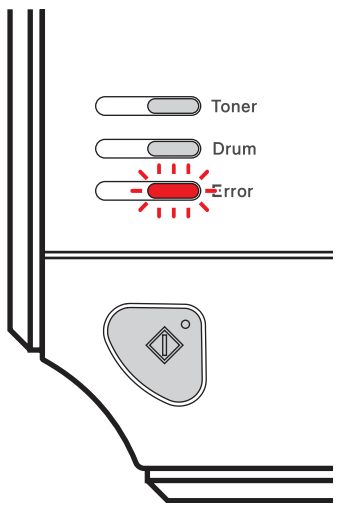	**Front cover is open** Close the front cover of the printer.
	Fuser cover is open Close the fuser cover located behind the back cover of the printer.
	Paper jam Clear the paper jam. See *Paper jams and how to clear them* on page 85. If the printer does not start printing, press the **Go** button.
	Memory full The printer memory is full and the printer cannot print full pages of a document. See *Solving print problems* on page 97.
	Print overrun A print overrun occurred and the printer cannot print full pages of a document. See *Solving print problems* on page 97.

LED	Printer status
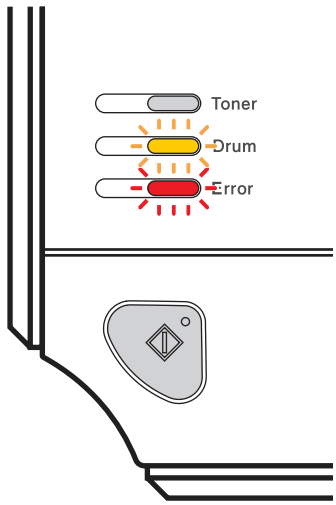	**Drum error** The corona wire needs to be cleaned. See *Cleaning the corona wire* on page 77. If your LED's still shows the same error indication after you have cleaned the corona wire, replace the drum unit with a new one. See *Replacing the drum unit* on page 69.

Service call indications

If there is an error that cannot be cleared by the user, the printer will show that a service call is needed by lighting up all the LEDs as shown below.

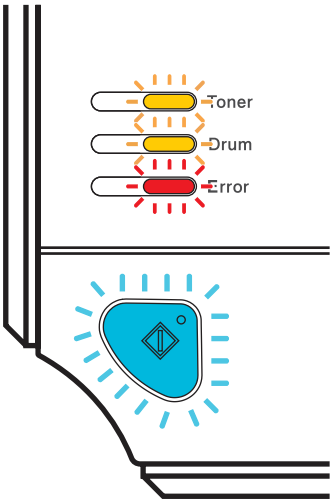

If you see the service call indication shown above, turn off the power switch, and then turn it back on and try to print again.

If the error remains after switching the printer back on, press the **Go** button and make a note of the LED's that remain lit and report the error status (as shown in the table below) to your dealer or Brother Customer Service.

LED indications while pressing the Go button

LEDs	Main PCB failure	Fuser unit failure [1]	Laser unit failure	Main motor failure	High voltage failure
Toner					
Drum					
Error					
Ready					

[1] If this error occurs, turn off the printer power switch, wait a few seconds, and then turn it on again. Leave the printer for 10 minutes with the power on. If the error occurs again, call your dealer or Brother Customer Service.

For example, the LED indication below shows a fuser unit failure.

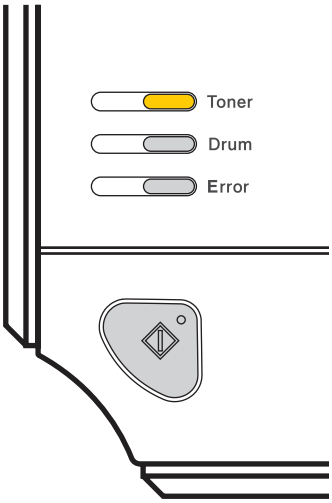

Make a note of the indication, referring to the table on page 53, and report the error status to your dealer or Brother Customer Service.

Note

Make sure that the front cover is completely closed before you report a service call.

Go button

The **Go** button has the following functions:

- **Cancel printing**

  Cancel only the printing job:
  While printing press the **Go** button for about 4 seconds until all the LEDs light up. The **Ready** and **Error** LEDs will flash as the job is being canceled.

  Cancel all the received jobs:
  To delete all jobs, press the **Go** button for about 4 seconds until all the LEDs light up and then release it. Press the **Go** button again. The **Ready** and **Error** LEDs will flash as the job is being canceled.

- **Wake-up**

  If the printer is in sleep mode, press the **Go** button to wake the printer up and go to the Ready state.

- **Error recovery**

  If there is an error, the printer will recover automatically from some errors. If an error is not automatically cleared, press the **Go** button to clear the error, and then continue to use the printer.

- **Form feed**

  If the blue **Ready** LED blinks for a long time, press the **Go** button. The printer will print any data that is left in the printer's memory.

- **Reprint**

  To reprint the last document, press the **Go** button for about 4 seconds until all the LEDs light up and then release it. Within 2 seconds press the **Go** button the number of times you want to reprint. If you don't press the **Go** button within 2 seconds, a single copy will be printed.

  If you want to use the reprint function open the driver's **Properties** dialog box and go to the Advanced tab, select the **Device options** icon and click **Job Spooling** and then check the **Use Reprint** check box. See *Device Options* on page 34.

Print a test page

You can use the **Go** button or the printer driver to print a test page.

Using the Go button

1. Turn off the printer.
2. Make sure that the front cover is closed and the power cord is plugged in.
3. Hold down the **Go** button as you turn on the power switch. Keep the **Go** button pressed down until the **Toner**, **Drum** and **Error** LEDs light up. Release the **Go** button. Make sure that the **Toner**, **Drum** and **Error** LEDs are off.
4. Press the **Go** button again. The printer will print a test page.

Using the printer driver

If you are using the Windows® printer driver, click the **Print Test Page** button in the **General** tab of the printer driver.

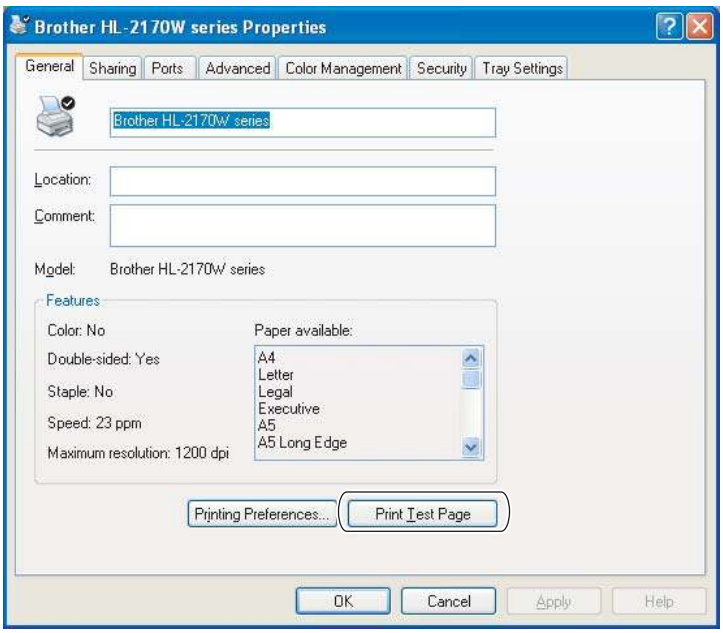

Print a Printer Settings page

You can print the current settings using the control panel button or printer driver.

Using the Go button

1. Make sure that the front cover is closed and the power cord is plugged in.
2. Turn on the printer and wait until the printer is in the Ready state.
3. Press the **Go** button three times within 2 seconds. The printer will print the current printer settings page.

Using the printer driver

If you are using the Windows® printer driver, you can print the current printer settings page by clicking the **Print Settings** button in the **Support** tab.

Print Fonts (HL-2150N / HL-2170W only)

You can print a list of the internal fonts using the control panel button or printer driver.

Using the Go button

1. Turn off the printer.
2. Make sure that the front cover is closed and the power cord is plugged in.
3. Hold down the **Go** button as you turn on the power switch. Keep the **Go** button pressed down until the **Toner**, **Drum** and **Error** LEDs light up. Release the **Go** button. Make sure that the **Toner**, **Drum** and **Error** LEDs are off.
4. Press the **Go** button twice. The printer will print a list of the internal fonts.

Using the printer driver

If you are using the Brother's Windows® printer driver, you can print a list of the internal fonts by clicking the **Print Fonts** button in the **Support** tab.

Network default settings (HL-2150N / HL-2170W only)

If you want to reset the print server back to its default settings (resetting all information such as the password and IP address information), follow these steps:

Using the Go button

1. Turn off the printer.
2. Make sure that the front cover is closed and the power cord is plugged in.
3. Hold down the **Go** button as you turn on the power switch. Keep the **Go** button pressed down until the **Toner**, **Drum** and **Error** LEDs light up. Release the **Go** button. Make sure that the **Toner**, **Drum** and **Error** LEDs are off.
4. Press the **Go** button seven times. Make sure that all the LEDs light up to indicate the print server has been reset to its default settings.

5 Routine Maintenance

You will need to replace certain parts and clean the printer regularly.

WARNING

When you replace certain parts or clean the inside of the printer, remember the following:

- If your clothes are smeared with toner, wipe off the toner with a dry cloth and immediately wash the clothes in cold water to avoid stains.
- Be careful not to inhale toner.
- After you have just used the printer, some internal parts of the printer will be extremely hot. When you open the front cover or back cover (back output tray) of the printer, DO NOT touch the shaded parts shown in the illustration. If you do this, you may get burned.

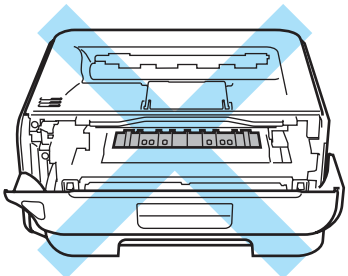

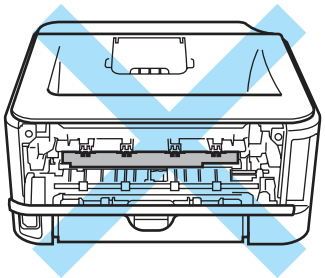

Replacing the consumable items

You will need to replace the consumable items when the machine indicates that the life of the consumable is over.

Consumables

Toner cartridge	Drum unit
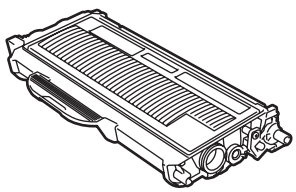	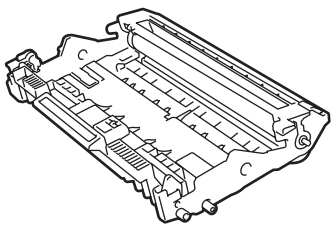
See *Toner cartridge* on page 61. Order No. TN-330, TN-360	See *Drum unit* on page 68. Order No.DR-360

Toner cartridge

The life of the original toner cartridge that came with the printer may be either a starter [1], standard [2] or high yield [3] toner cartridge, and depends on the model and country you bought the printer in.

[1] The starter toner cartridge will print approximately 1,000 A4 or Letter-size single-sided pages. Approx. cartridge yield is declared in accordance with ISO/IEC 19752.

[2] Standard toner cartridges print approximately 1,500 A4 or Letter-size single-sided pages. Approx. cartridge yield is declared in accordance with ISO/IEC 19752.

[3] High yield toner cartridges print approximately 2,600 A4 or Letter-size single-sided pages. Approx. cartridge yield is declared in accordance with ISO/IEC 19752.

Note

- The amount of toner used varies according to what is printed on the page and the print density setting.
- If you change the print density setting for lighter or darker printing, the amount of toner used will change.
- Wait to unpack the toner cartridge until immediately before you put it into the printer.

Toner Low message

The **Toner** LED will turn on for 2 seconds and off for 3 seconds and repeats this pattern.

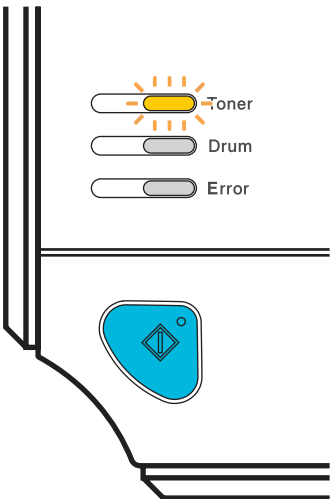

If the LED shows this message, the printer has nearly run out of toner and will continue to print until it has reached the end of its life. Buy a new toner cartridge and have it ready before you get a **Toner Life End** message. To replace the toner cartridge, see *Replacing the toner cartridge* on page 62.

Note

The **Toner** LED will blink continuously if the toner cartridge is nearly empty.

Toner Life End message

The printer will stop printing until you replace the toner cartridge with a new one.

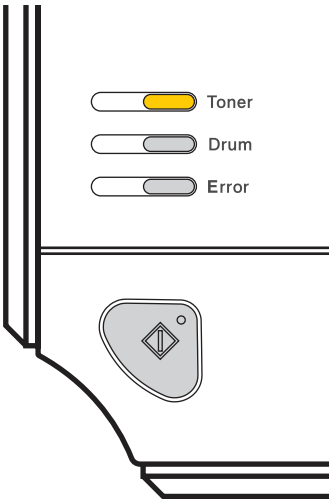

Replacing the toner cartridge

Note

- To ensure high quality printing, we recommend that you use only genuine Brother toner cartridges. When you want to buy toner cartridges, call your dealer or Brother Customer Service.
- We recommend that you clean the printer when you replace the toner cartridge. See *Cleaning* on page 73.

1. Make sure that the printer is turned on. Open the front cover.

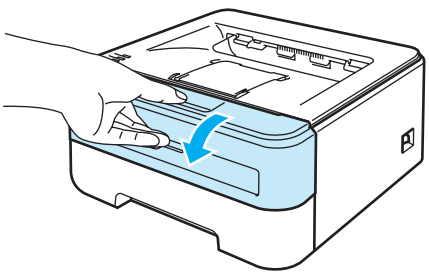

2. Take out the drum unit and toner cartridge assembly.

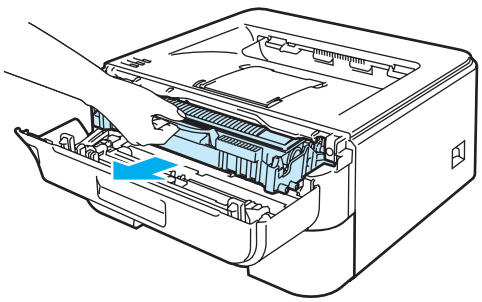

CAUTION

We recommend that you put the drum unit and toner cartridge assembly on a piece of disposable paper or cloth in case you accidentally spill or scatter toner.

To prevent damage to the printer from static electricity, DO NOT touch the electrodes shown in the illustration.

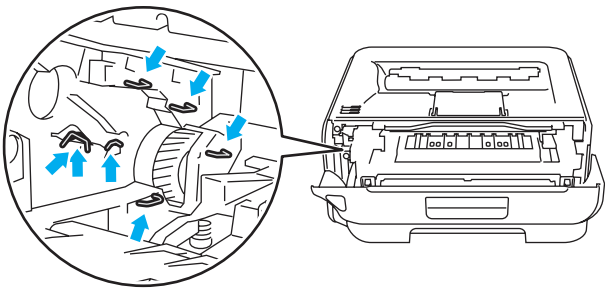

3 Push down the green lock lever and take the toner cartridge out of the drum unit.

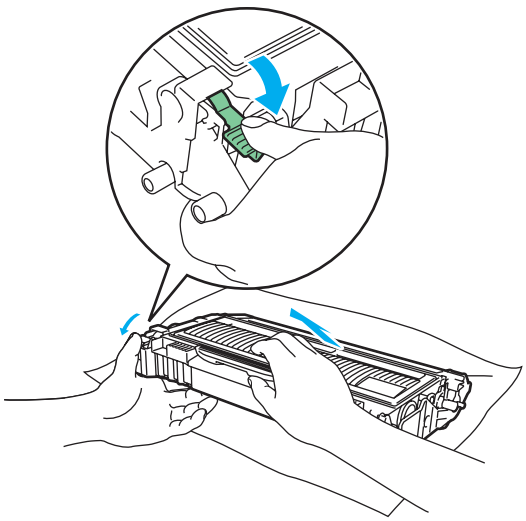

WARNING

DO NOT put a toner cartridge into a fire. It could explode, resulting in injuries.

DO NOT use flammable substances, any type of spray an organic solvent/liquids contains alcohol or ammonia to clean the inside or outside of the printer. Doing this may cause a fire or electrical shock. See *Cleaning* on page 73 for how to clean the printer.

CAUTION

Handle the toner cartridge carefully. If toner scatters on your hands or clothes, wipe or wash it off with cold water at once.

To avoid print quality problems, DO NOT touch the shaded parts shown in the illustrations.

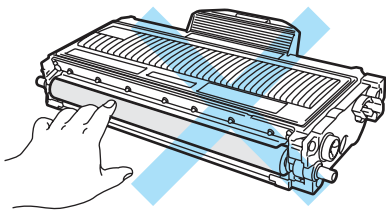

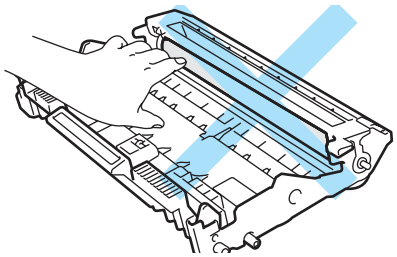

Note

- Be sure to seal up the toner cartridge tightly in a suitable bag so that toner powder does not spill out of the cartridge.
- Go to http://www.brother-usa.com/environment/ for instructions on how to return the used toner cartridge to the brother collection program. If you choose not to return your used toner cartridge, please discard the used toner cartridge according to local regulations, keeping it separate from domestic waste. If you have questions, call your local waste disposal office.

4 Unpack the new toner cartridge. Hold the cartridge level with both hands and gently rock it from side to side five or six times to spread the toner evenly inside the cartridge.

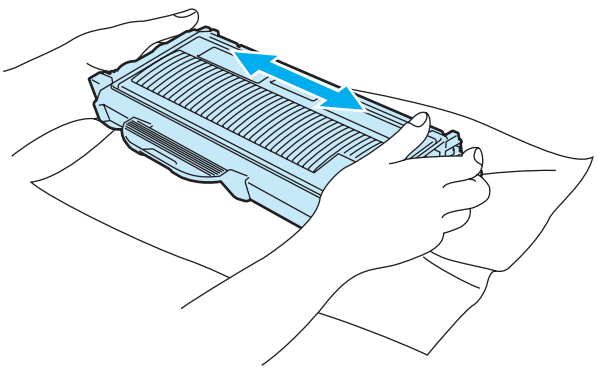

CAUTION

Wait to unpack the toner cartridge until immediately before you put it in the printer. If toner cartridges are left unpacked for a long time the toner life will be shortened.

If an unpacked drum unit is put in direct sunlight or room light, the unit may be damaged.

Put the toner cartridge in the drum unit immediately after you have removed the protective cover. To prevent any degradation to the print quality, DO NOT touch the shaded parts shown in the illustrations.

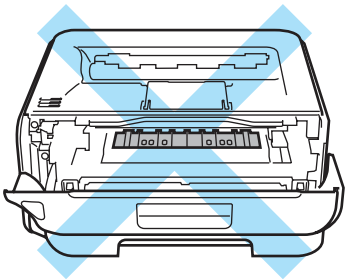

CAUTION

For USA and Canada

Brother strongly recommends that you do not refill the toner cartridge provided with your printer. We also strongly recommend that you continue to use only genuine Brother brand replacement toner cartridges. Use or attempted use of potentially incompatible toner and/or cartridges in the Brother machine may cause damage to the machine and/or may result in unsatisfactory print quality. Our warranty coverage does not apply to any problem that is caused by the use of unauthorized third party toner and/or cartridges. To protect your investment and obtain premium performance from the Brother machine, we strongly recommend the use of genuine Brother supplies.

CAUTION

For UK and other countries

Brother machines are designed to work with toner of a particular specification and will work to a level of optimum performance when used with genuine Brother branded toner cartridges. Brother cannot guarantee this optimum performance if toner or toner cartridges of other specifications are used. Brother does not therefore recommend the use of cartridges other than genuine Brother branded cartridges with this machine.

If damage is caused to the drum unit or other part of this machine as a result of using other manufacturer's products with this machine, any repairs required as a result may not be covered by the warranty.

5 Pull off the protective cover.

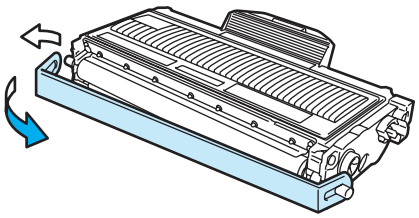

6 Put the new toner cartridge firmly into the drum unit until you hear it lock into place. If you put it in properly, the lock lever will lift automatically.

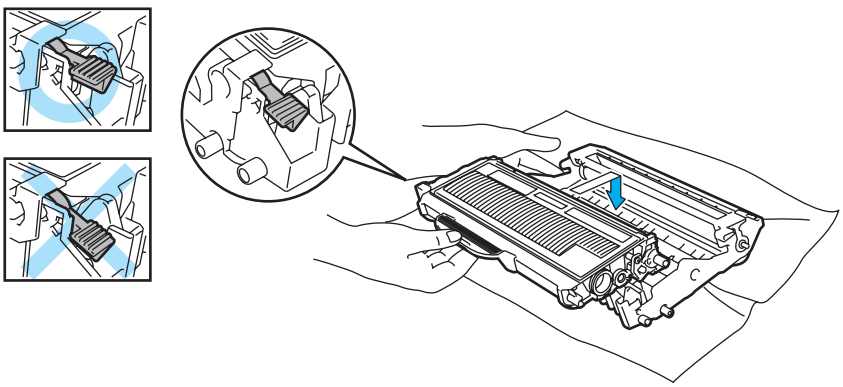

CAUTION

Make sure that you put in the toner cartridge properly or it may separate from the drum unit.

7 Clean the primary corona wire inside the drum unit by gently sliding the green tab from right to left and left to right several times.

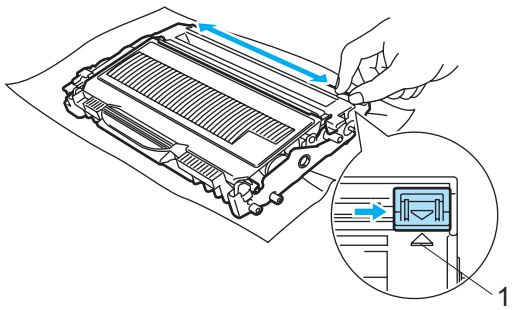

CAUTION

Be sure to return the tab to the home position (▲) (1). If you do not, printed pages may have a vertical stripe.

8 Put the drum unit and toner cartridge assembly back in the printer. Close the front cover.

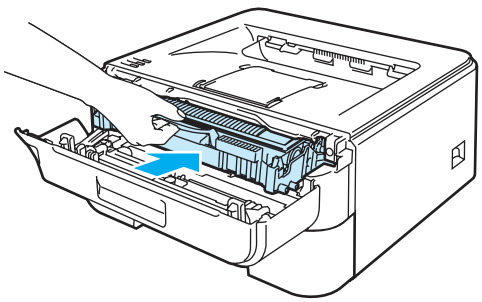

CAUTION

DO NOT turn off the printer power switch or open the front cover until the **Ready** LED lights up.

Drum unit

A new drum unit can print approximately 12,000 A4 or Letter size single-sided pages at 1 per/ job.

Note

- There are many factors that determine the actual drum life, such as the temperature, humidity, type of paper, type of toner used, number of pages per print job and so on. Under ideal conditions, the average drum life is estimated at approximately 12,000 pages. The actual number of pages that your drum will print may be significantly less than this estimate. Because we have no control over the many factors that determine the actual drum life, we cannot guarantee a minimum number of pages that will be printed by your drum.
- For best performance, use only genuine Brother toner. The printer should be used only in a clean, dust-free environment with adequate ventilation.
- Printing with a third-party drum unit may reduce not only the print quality but also the quality and life of the printer itself. Warranty coverage does not apply to problems caused by the use of a third-party drum unit.

Change Drum message

The **Drum** LED will turn on for 2 seconds and off for 3 seconds and repeats this pattern.

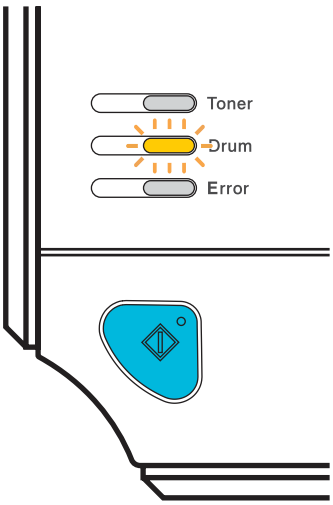

If the LED shows the message, it means the drum unit is near the end of its life. We recommend that you replace the drum unit with a new one before there is a noticeable deterioration in the print quality.

Replacing the drum unit

CAUTION

While removing the drum unit, handle it carefully because it may contain toner.

Every time you replace the drum unit, clean the inside of the printer. See *Cleaning* on page 73.

When you replace the drum unit with a new one, you need to reset the drum counter by completing the following steps:

1. Make sure that the printer is turned on and the **Drum** LED is blinking. Open the front cover.

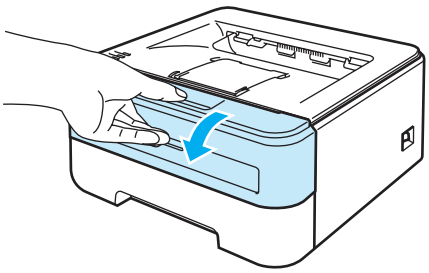

2. Press and hold down the white **Go** button for about 4 seconds until all the LEDs light up. Once all four LEDs are lit, release the **Go** button.

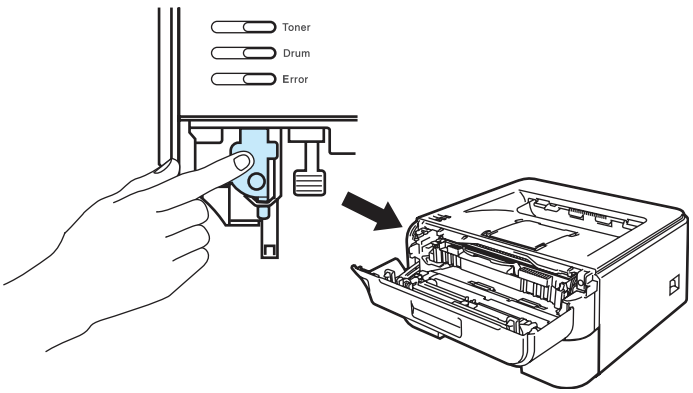

Improper Setup

Do not reset the drum counter when you only replace the toner cartridge.

3 Take out the drum unit and toner cartridge assembly.

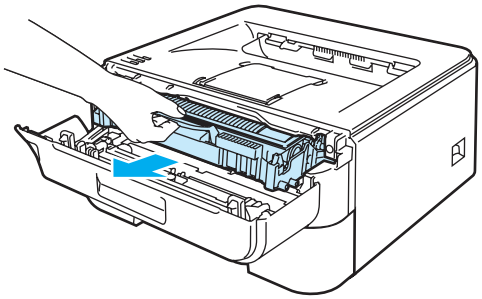

CAUTION

We recommend that you put the drum unit and toner cartridge assembly on a piece of disposable paper or cloth in case you accidentally spill or scatter toner.

To prevent damage to the printer from static electricity, DO NOT touch the electrodes shown in the illustration.

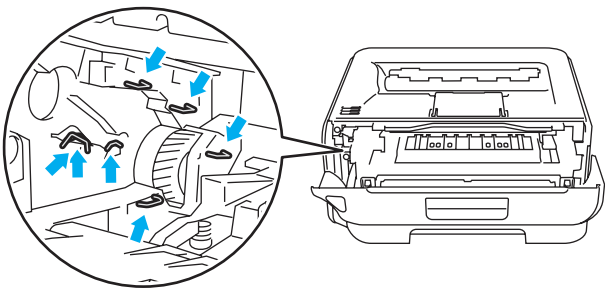

4 Push down the green lock lever and take the toner cartridge out of the drum unit.

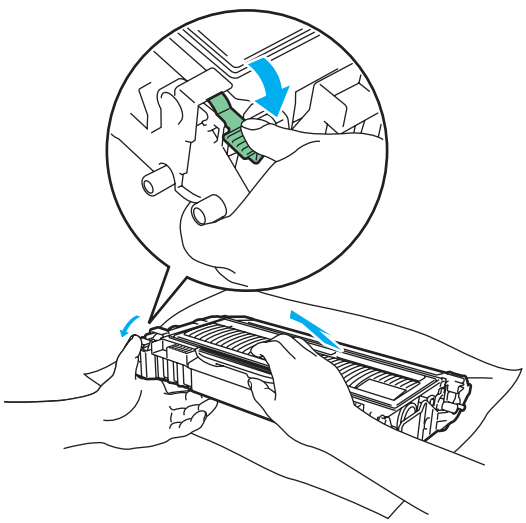

CAUTION

Handle the toner cartridge carefully. If toner scatters on your hands or clothes, wipe or wash it off with cold water at once.

To avoid print quality problems, DO NOT touch the shaded parts shown in the illustrations.

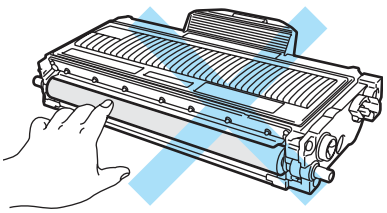

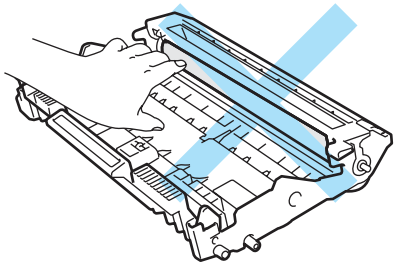

Note

- Be sure to seal up the drum unit tightly in a suitable bag so that toner powder does not spill out of the unit.
- Go to http://www.brother-usa.com/environment/ for instructions on how to return the used toner cartridge to the brother collection program. If you choose not to return your used toner cartridge, please discard the used toner cartridge according to local regulations, keeping it separate from domestic waste. If you have questions, call your local waste disposal office.

5 Unpack the new drum unit.

CAUTION

Wait to unpack a drum unit until immediately before you put it in the printer. Exposure to direct sunlight or room light may damage the drum unit.

6 Put the toner cartridge firmly into the new drum unit until you hear it lock into place. If you put the cartridge in properly, the green lock lever will lift automatically.

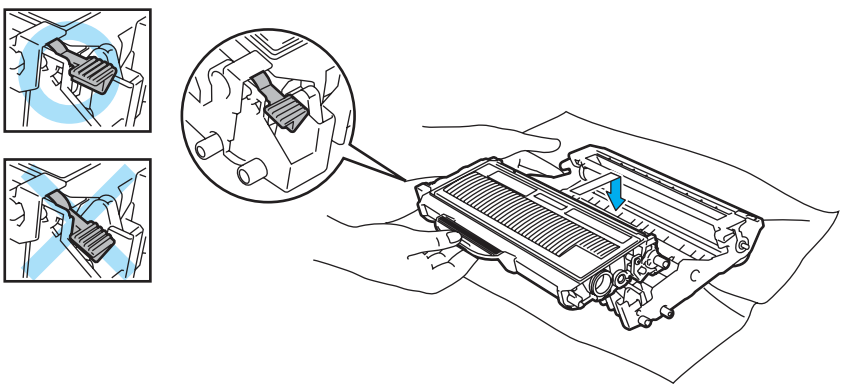

CAUTION

Make sure that you put in the toner cartridge properly, or it may separate from the drum unit.

7 Put the drum unit and toner cartridge assembly back in the printer.

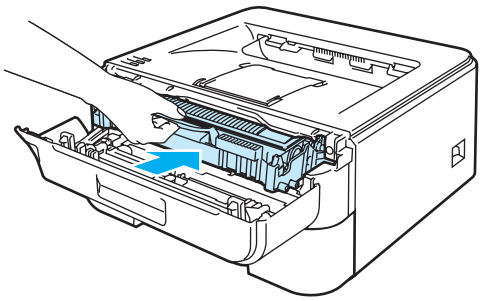

8 Close the front cover.

9 Make sure that the **Drum** LED is now off.

Cleaning

Clean the outside and inside of the printer regularly with a dry, lint-free cloth. When you replace the toner cartridge or the drum unit, make sure that you clean the inside of the printer. If printed pages are stained with toner, clean the inside of the printer with a dry, lint-free cloth.

Cleaning the outside of the printer

WARNING

Use neutral detergents.

DO NOT use cleaning materials that contain ammonia, alcohol, any type of spray, or any type of flammable substance to clean the outside or inside of the machine. Doing this may cause a fire or electrical shock.

1. Turn off the printer power switch and then unplug the printer.

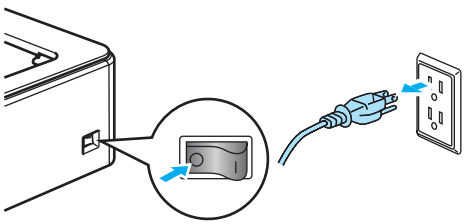

2. Pull the paper tray completely out of the printer.

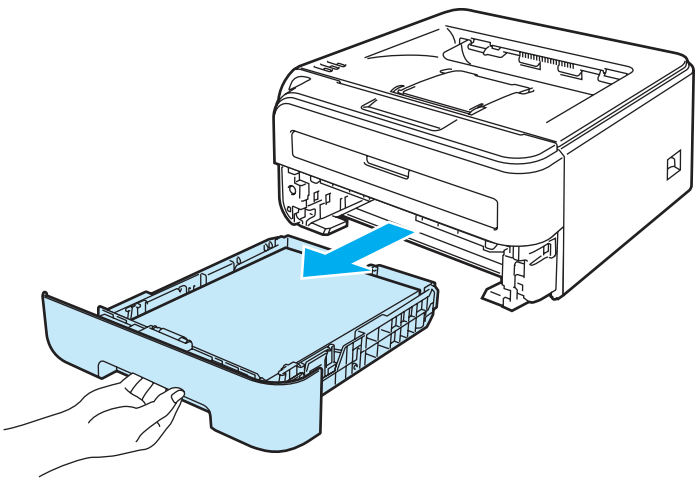

3 Wipe the outside of the printer with a dry, lint-free cloth to remove dust.

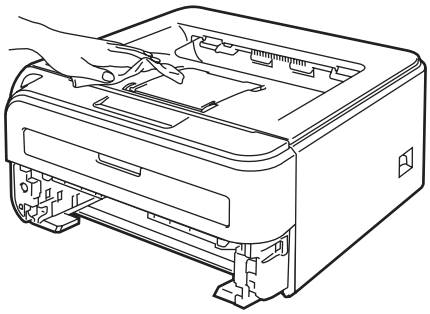

4 Remove anything that is stuck inside the paper tray.

5 Wipe the inside of the paper tray with a dry, lint-free cloth to remove dust.

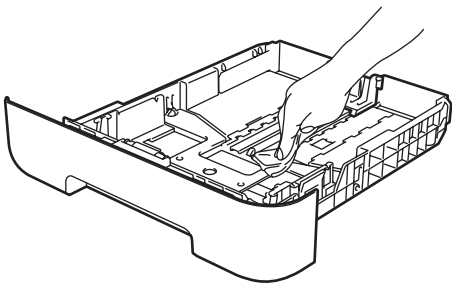

6 Put the paper tray back in the printer.

7 Plug the printer back in, and then turn on the power switch.

Cleaning the inside of the printer

1 Turn off the printer power switch and then unplug the printer.

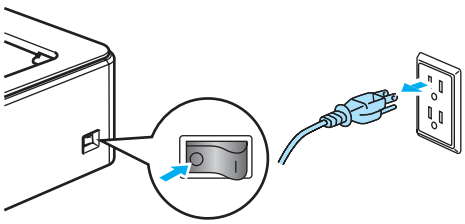

2 Open the front cover.

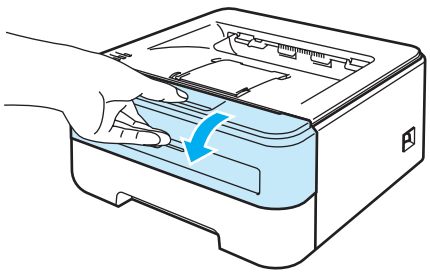

3 Take out the drum unit and toner cartridge assembly.

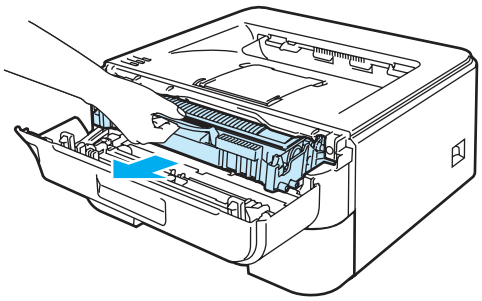

HOT SURFACE

After you have just used the printer, some internal parts of the printer will be extremely hot. Wait for the printer to cool down before you touch the internal parts of the printer.

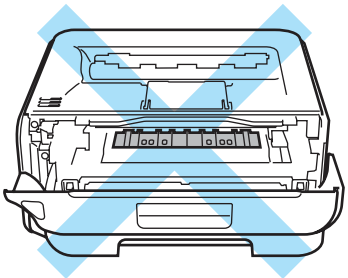

CAUTION

We recommend that you put the drum unit and toner cartridge assembly on a piece of disposable paper or cloth in case you accidentally spill or scatter toner.

Handle the toner cartridge carefully. If toner scatters on your hands or clothes, wipe or wash it off with cold water at once.

To prevent damage to the printer from static electricity, DO NOT touch the electrodes shown in the illustration.

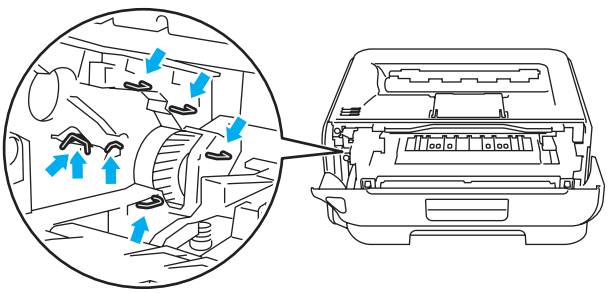

4 Wipe the scanner window with a dry, lint-free cloth.

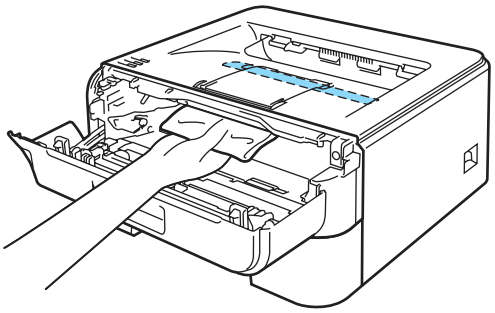

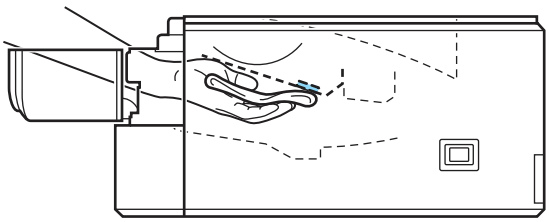

5 Put the drum unit and toner cartridge assembly back in the printer.

6 Close the front cover.

7 Plug the printer back in, and then turn on the power switch.

Cleaning the corona wire

If you have print quality problems, clean the corona wire as follows:

1. Open the front cover.

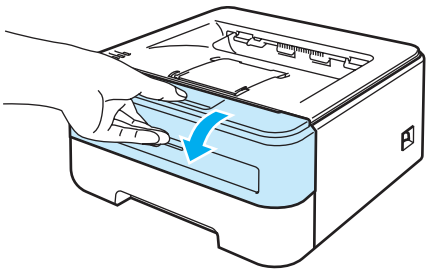

2. Take out the drum unit and toner cartridge assembly.

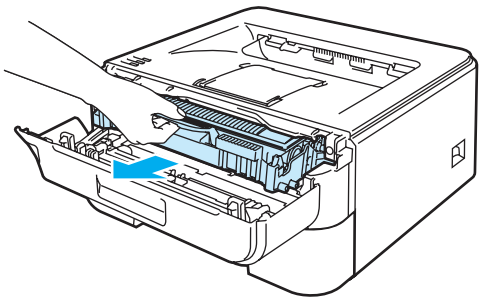

CAUTION

We recommend that you put the drum unit and toner cartridge assembly on a piece of disposable paper or cloth in case you accidentally spill or scatter toner.

To prevent damage to the printer from static electricity, DO NOT touch the electrodes shown in the illustration.

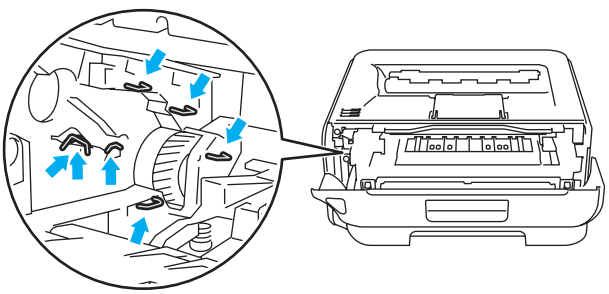

3 Clean the primary corona wire inside the drum unit by gently sliding the green tab from right to left and left to right several times.

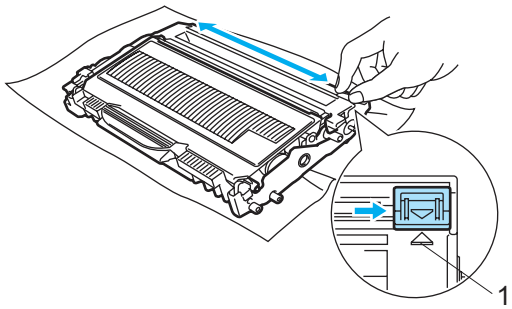

CAUTION

Be sure to return the tab to the home position (▲) (1). If you do not, printed pages may have a vertical stripe.

4 Put the drum unit and toner cartridge assembly back in the printer. Close the front cover.

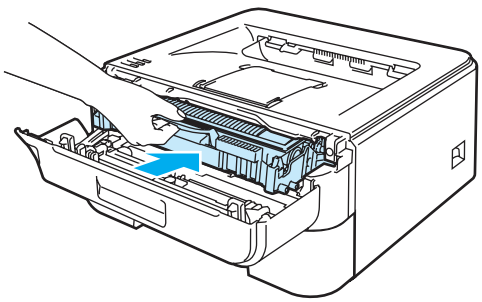

6 Troubleshooting

You can correct most problems by yourself. If you need additional help, the Brother Solutions Center offers the latest FAQs and troubleshooting tips. Visit us at http://solutions.brother.com.

Identifying your problem

First, check the following:

- The AC power cord is connected properly and the printer is turned on.
- All of the protective parts have been removed.
- The toner cartridges and drum unit are installed properly.
- The front cover and fuser cover are fully closed.
- Paper is inserted properly in the paper tray.
- The interface cable is securely connected to the printer and the computer.
- The correct driver for the printer has been chosen and is installed.
- The computer is set up to connect to the correct printer port.

Printer does not print:

If you did not solve your problem with the above checks, identify your problem and then go to the page suggested below.

- **Printer LED is blinking**

  See *LEDs (Light Emitting Diodes)* on page 48.
- **Status Monitor Error Message appears**

  See *Error messages in the Status Monitor* on page 80.
- **Printer printed an Error Message**

  See *Error message printout* on page 82.
- **Paper handling**

  (See *Paper handling* on page 83 and *Paper jams and how to clear them* on page 85.)
- **Other problems**

  (See *Other problems* on page 98.)

Pages are printed, but there are problems with:

- **Print quality**

  (See *Improving the print quality* on page 91.)
- **Printout is incorrect**

  (See *Solving print problems* on page 97.)

Error messages in the Status Monitor

The Status Monitor will report problems with the printer. Take the proper action by referring to the following table.

If you want to turn the status monitor on, follow these steps:

For Windows® users

Click the **Start** button, **All Programs** [1], your printer (e.g Brother HL-2140), and then **Status Monitor**.

[1] **Programs** for Windows® 2000 users

For Macintosh® users (Mac OS® X 10.3 or greater only)

See *Status Monitor (For Mac OS® X 10.3 or greater users)* on page 44.

Error message	Action
Cover is Open	■ Close the front cover of the printer.
Memory Full	■ Press the **Go** button to print the remaining data in the printer memory. Cancel the print job if you want to delete the remaining data in the printer memory. See *Go button* on page 55. ■ Reduce the complexity of your document or cut the print resolution.
Print Overrun	■ Press the **Go** button to print the remaining data in the printer memory. Cancel the print job if you want to delete the remaining data in the printer memory. See *Go button* on page 55. ■ If this does not clear the error, reduce the complexity of your document or cut the print resolution. ■ (HL-2150N / HL-2170W only) Change the following settings in the supplied Windows® driver and try again. The best combination of these settings will vary depending on your document: • Graphics mode [1] • TrueType mode [1] • Use Printer TrueType® Fonts [1] [1] Choose the **Advanced** tab, click the Print Quality icon, and then choose **Manual** in **Print Setting** and click the **Setting...** button.
No Paper Fed Tray 1	■ The paper tray may be out of paper or not properly installed. If it is empty, put a new stack of paper in the paper tray and then press the **Go** button. ■ If there is paper in the paper tray, make sure it is straight. If the paper is curled, straighten it before printing. Sometimes it is helpful to remove the paper, turn the stack over and put it back in the paper tray. ■ Cut the amount of paper in the paper tray, and then try again. ■ Make sure you use paper that meets Brother's recommended paper specifications. See *About paper* on page 5. ■ Load the same size paper that you selected in the current driver setting.

Error message	Action
No Paper Fed Manual Slot	■ If the manual feed slot is empty, put a piece of paper in it. ■ Make sure you use paper that meets Brother's recommended paper specifications. See *About paper* on page 5. ■ Load the same size paper that you selected in the current driver setting.
Paper Jam Tray 1 **Paper Jam Inside** **Paper Jam Rear**	■ Clear the jammed paper from the indicated area. See *Paper jams and how to clear them* on page 85.
Toner Life End	■ See *Replacing the toner cartridge* on page 62.
Toner Low	■ Buy a new toner cartridge and have it ready for when the **Toner Life End** status is indicated.
Cartridge Error	■ Make sure the drum unit and toner cartridge assembly is installed properly.
Fuser Cover is Open	■ Close the fuser cover located behind the back cover of the printer.
Drum Life End Soon	■ The drum unit is near the end of its life. Buy a new drum unit to replace the current one. See *Replacing the drum unit* on page 69.
Drum Error	■ See *Cleaning the corona wire* on page 77. ■ If your LED's still shows the same error indication after you have cleaned the corona wire, replace the drum unit with a new one. See *Replacing the drum unit* on page 69.
Service Call	■ Check the LED indication to identify the error. See *Service call indications* on page 53.

Error message printout

The printer can also report problems by printing an error message. Use the table below to identify and clear the error message.

Error message	Action
Memory Full	■ Press the **Go** button to print the remaining data in the printer memory. Cancel the print job if you want to delete the remaining data in the printer memory. See *Go button* on page 55. ■ Reduce the complexity of your document or reduce the print resolution.
Print Overrun	■ Press the **Go** button to print the remaining data in the printer memory. Cancel the print job if you want to delete the remaining data in the printer memory. See *Go button* on page 55. ■ If this does not clear the error, reduce the complexity of your document or reduce the print resolution. ■ (HL-2150N / HL-2170W only) Change the following settings in the supplied Windows® driver and try again. The best combination of these settings will vary depending on your document: • Graphics mode [1] • TrueType mode [1] • Use Printer TrueType® Fonts [1] [1] Choose the **Advanced** tab, click the Print Quality icon, and then choose **Manual** in **Print Setting** and click the **Setting...** button.
Resolution reduced to enable printing (The printer has printed the document at a reduced resolution)	■ Reduce the complexity of your document before you print to prevent automatic reduction in the resolution.

Paper handling

First, make sure that you are using paper that meets Brother's recommended paper specifications. (See *About paper* on page 5.)

Problem	Recommendation
The printer does not feed paper.	■ If there is paper in the paper tray, make sure it is straight. If the paper is curled, flatten it before printing. Sometimes it is helpful to remove the paper. Turn the stack over and put it back in the paper tray. ■ Reduce the amount of paper in the paper tray, and then try again. ■ Make sure that manual feed mode is not chosen in the printer driver.
The printer does not feed paper from the manual feed slot.	■ Fan the paper well and put it back in firmly. ■ Make sure that you have chosen the manual feed slot in the Paper Source of the printer driver.
The printer does not feed envelopes.	■ The printer can feed envelopes from the manual feed slot. You must set up your application to print on the size of envelopes you are using. This is usually done in the page setup or document setup menu of your software. (See your application manual.)
A paper jam has occurred.	■ Clear the jammed paper. (See *Paper jams and how to clear them* on page 85.)
The printer does not print.	■ Make sure that the cable is connected to the printer. ■ Make sure that you have chosen the correct printer driver.
When printing on normal paper, it creases.	■ Change the printer driver setting in **Media Type** to a thin setting.
The paper slides off the top output tray.	■ Lift up the output tray support flap 1 (1). 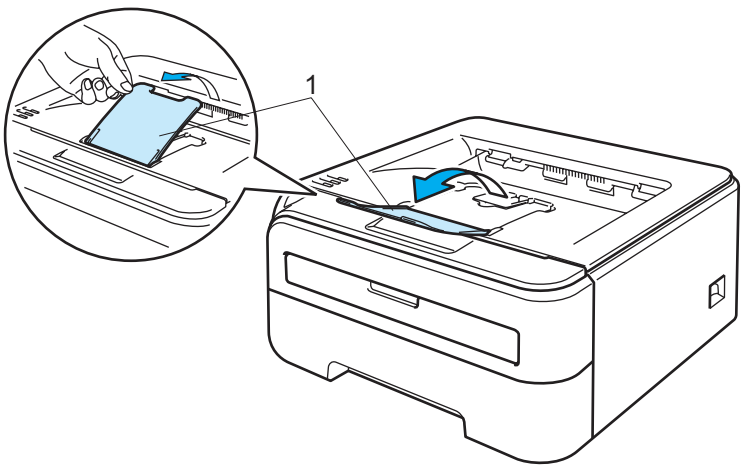

Problem	Recommendation
The paper slides off the back output tray.	Follow these steps: 1 Remove the output tray support flap 1 (1) from the top of the printer by first lifting the flap up. Then push the flap to the left or right to release one of the posts (2) on the flap and pull up. 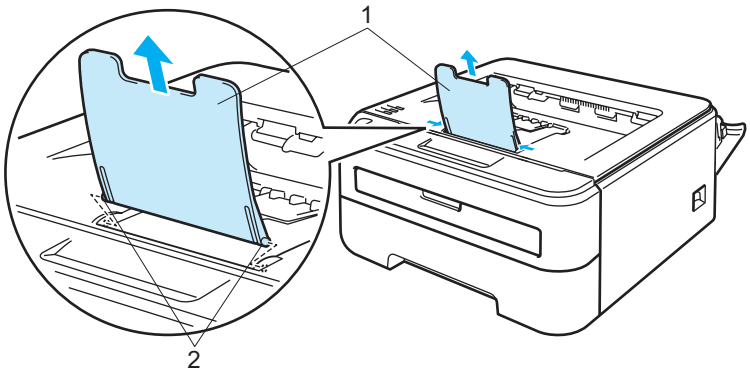 2 Attach the support flap 1 (1) to the back output tray by inserting the posts of the support flap one at a time into the holes of the back output tray. 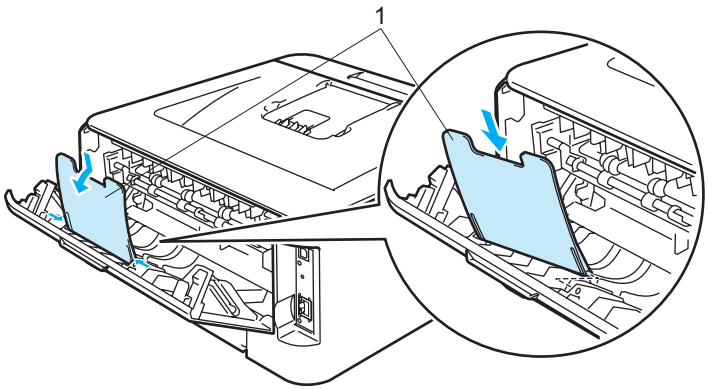

Paper jams and how to clear them

If a paper jam occurs, the printer will flash the Error LED as shown below.

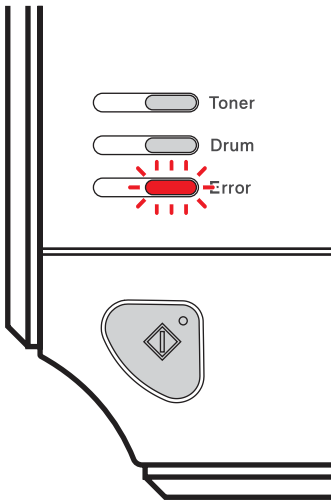

HOT SURFACE

After you have just used the printer, some internal parts of the printer will be extremely hot. When you open the front cover or back cover (back output tray) of the printer, DO NOT touch the shaded parts shown in the illustration. If you do this, you may get burned.

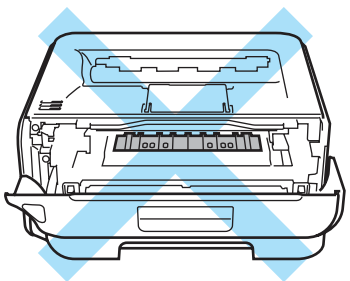

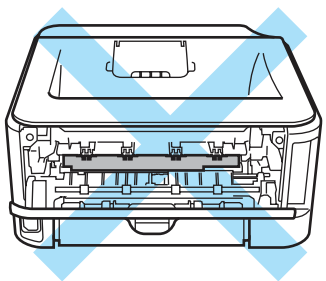

Clear the jammed paper as follows.

If the jammed paper is removed completely by following the steps below, you can install the paper tray first, and then close the front cover. The printer will resume printing automatically.

If the printer does not start printing automatically, press the **Go** button. If the printer still does not start printing, check that all the remaining jammed paper has been removed from the printer. Then try printing again.

Note

- Always remove all paper from the paper tray and straighten the stack when you add new paper. This helps prevent multiple sheets of paper from feeding through the printer at one time and prevents paper jams.
- Please confirm that you have installed both a toner cartridge and a drum unit in the machine. If you have not installed a drum unit or have installed the drum unit improperly, then this may cause a paper jam in your Brother machine.

1. Open the front cover.

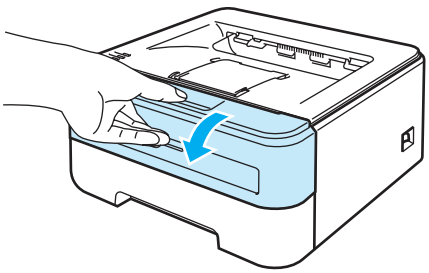

2. Slowly take out the drum unit and toner cartridge assembly. The jammed paper will be pulled out with the drum unit and toner cartridge assembly.

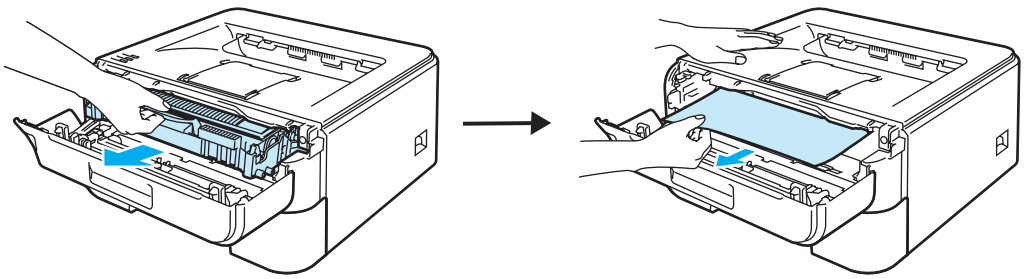

CAUTION

We recommend that you put the drum unit and toner cartridge assembly on a piece of disposable paper or cloth in case you accidentally spill or scatter toner.

To prevent damage to the printer caused by static electricity, DO NOT touch the electrodes shown in the illustration.

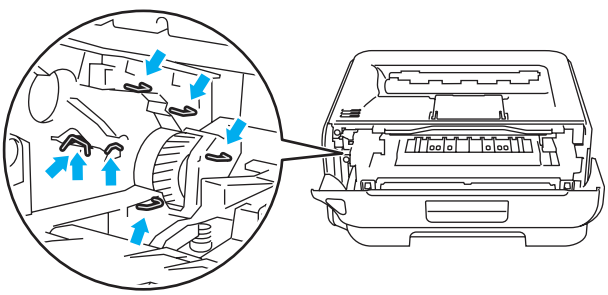

3 Close the front cover.

Note

Do not put the drum unit and toner cartridge assembly back in at this point.

4 Pull the paper tray completely out of the printer.

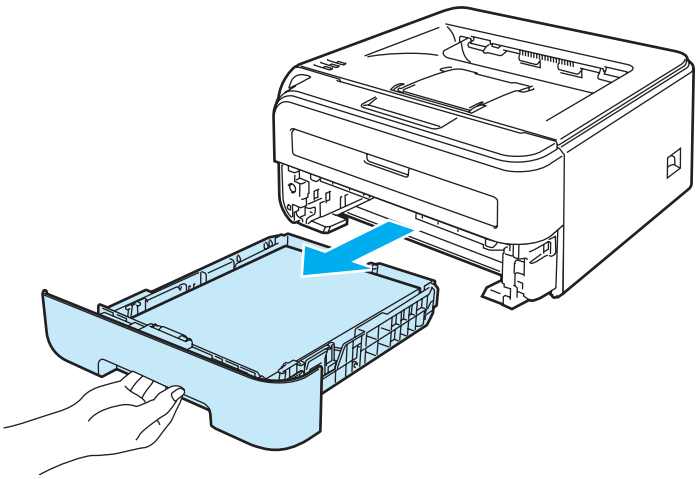

5 Pull the jammed paper down and out of the printer.

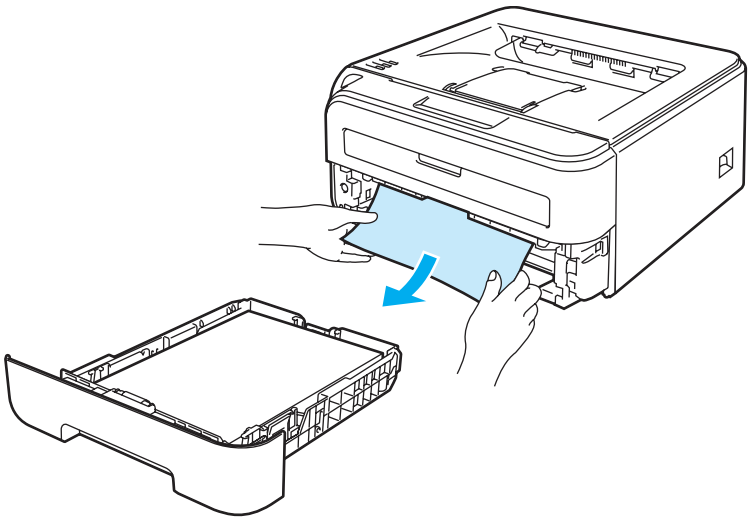

6 Open the back cover (back output tray).

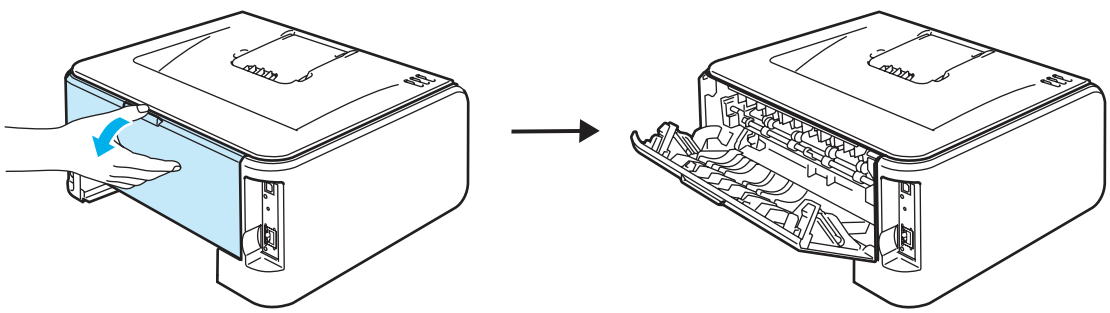

7 Pull the tab toward you to open the fuser cover (1).

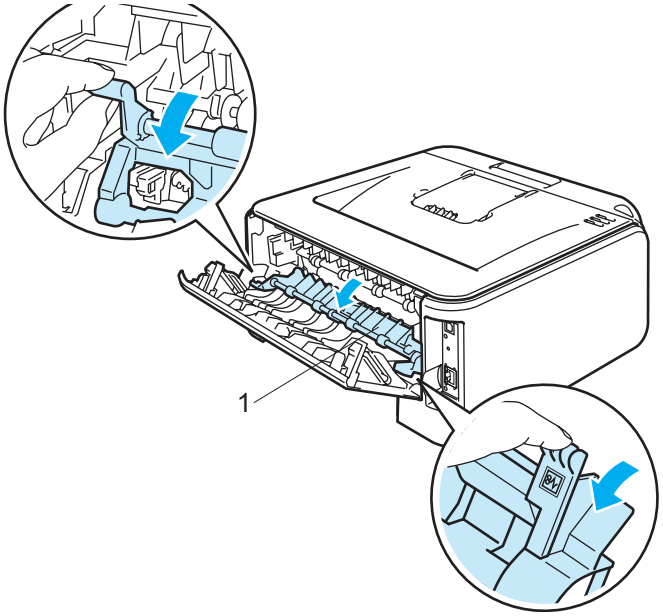

8 Pull the jammed paper out of the fuser unit.

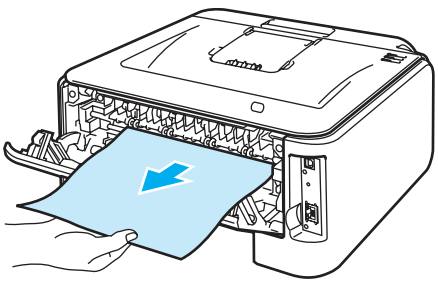

HOT SURFACE

After you have just used the printer, some internal parts of the printer will be extremely hot. Wait for the printer to cool down before you touch the internal parts of the printer.

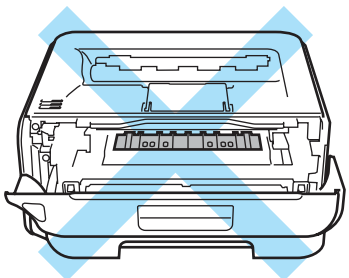

9 Close the back cover (back output tray).

10 Push down the green lock lever and take the toner cartridge out of the drum unit. Clear the jammed paper if there is any inside the drum unit.

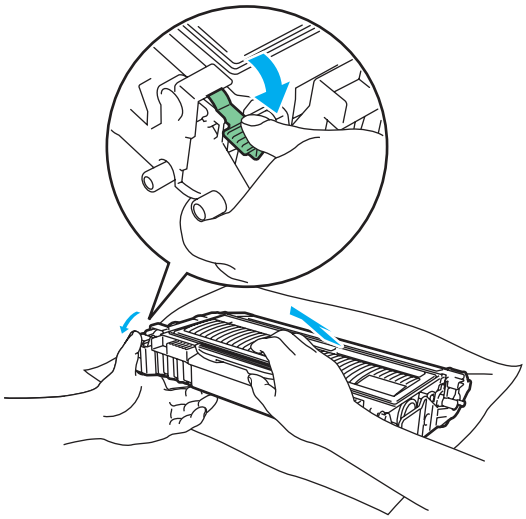

CAUTION

Handle the toner cartridge carefully. If toner scatters on your hands or clothes, wipe or wash it off with cold water at once.

To avoid print quality problems, DO NOT touch the shaded parts shown in the illustrations.

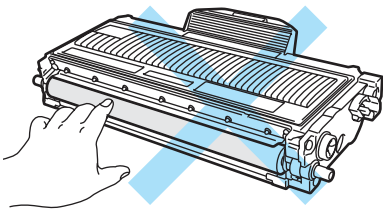

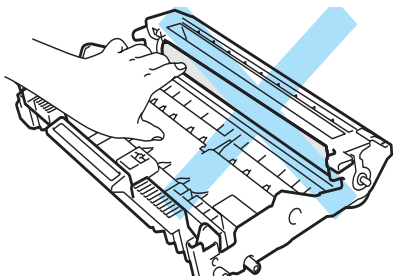

11 Put the toner cartridge back into the drum unit until you hear it lock into place. If you put the cartridge in properly, the green lock lever will lift automatically.

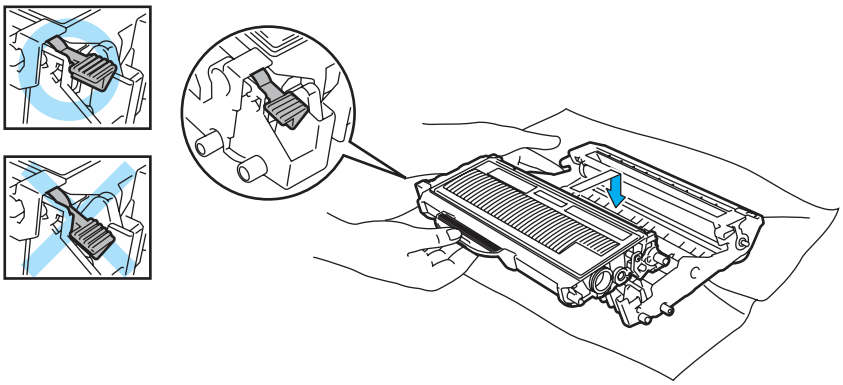

12 Open the front cover. Put the drum unit and toner cartridge assembly back in the printer.

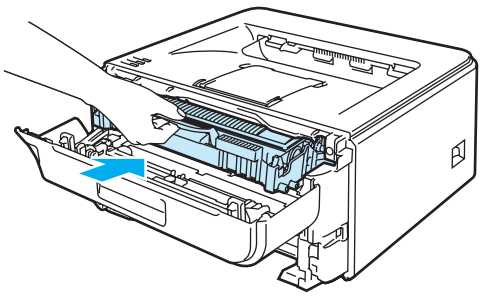

13 Put the paper tray firmly back in the printer.

14 Close the front cover.

15 Make sure that the **Error** LED is now off.

Improving the print quality

If you have a print quality problem, print a test page first (see *Print a test page* on page 56). If the printout looks good, the problem is probably not the printer. Check the interface cable or try the printer on another computer.

This section gives information on the following topics.

Examples of poor print quality	Recommendation
 Faint	■ Check the printer's environment. Conditions such as humidity, high temperatures, and so on, may cause this print fault. See *Positioning the printer* on page 4. ■ If the whole page is too light, **Toner Save Mode** may be on. Turn off **Toner Save Mode** in the printer **Properties** tab of the driver. ■ Put in a new toner cartridge. See *Replacing the toner cartridge* on page 62. ■ Put in a new drum unit. See *Replacing the drum unit* on page 69. ■ You may clear the problem by wiping the scanner window with a soft cloth. See *Cleaning the inside of the printer* on page 74.
 Gray background	■ Make sure that you use paper that meets our specifications. See *About paper* on page 5. ■ Check the printer's environment. Conditions such as high temperatures and high humidity can increase the amount of background shading. See *Positioning the printer* on page 4. ■ Put in a new toner cartridge. See *Replacing the toner cartridge* on page 62. ■ Put in a new drum unit. See *Replacing the drum unit* on page 69.
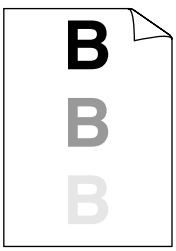 **Ghost**	■ Make sure that you use paper that meets our specifications. Rough-surfaced paper or thick print media may cause this problem. See *About paper* on page 5. ■ Make sure that the media type setting in the driver matches the type of paper you are using. See *About paper* on page 5. ■ Put in a new drum unit. See *Replacing the drum unit* on page 69. ■ The fuser unit may be contaminated. Call Brother Customer Service.
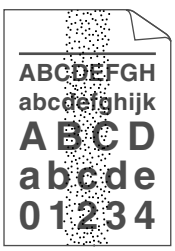 **Toner specks**	■ Make sure that you use paper that meets our specifications. Rough-surfaced paper may cause the problem. See *About paper* on page 5. ■ The drum unit may be damaged. Put in a new drum unit. See *Replacing the drum unit* on page 69. ■ The fuser unit may be contaminated. Call Brother Customer Service.

Examples of poor print quality	Recommendation
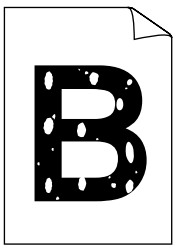 **Hollow print**	■ Make sure that you use paper that meets our specifications. See *About paper* on page 5. ■ Choose **Thick paper** mode in the printer driver, or use thinner paper than what you are now using. ■ Check the printer's environment. Conditions such as high humidity can cause hollow print. See *Positioning the printer* on page 4. ■ The drum unit may be damaged. Put in a new drum unit. See *Replacing the drum unit* on page 69.
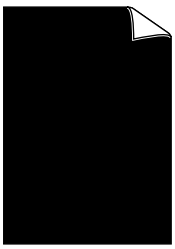 **All black**	■ Clean the primary corona wire inside the drum unit by sliding the green tab. Be sure to return the green tab to the home position (▲). See *Cleaning the corona wire* on page 77. ■ The drum unit may be damaged. Put in a new drum unit. See *Replacing the drum unit* on page 69. ■ The fuser unit may be contaminated. Call Brother Customer Service.
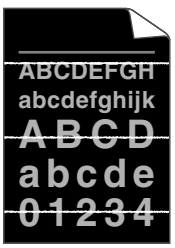 **White lines across the page**	■ Make sure that you use paper that meets our specifications. A rough surfaced paper or thick print media can cause problems. ■ Make sure that you choose the correct media type in the printer driver. ■ The problem may disappear by itself. Print multiple pages to clear this problem, especially if the printer has not been used for a long time. ■ The drum unit may be damaged. Put in a new drum unit. See *Replacing the drum unit* on page 69.
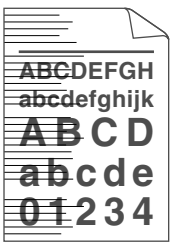 **Lines across the page**	■ Clean the inside of the printer and the primary corona wire in the drum unit. See *Cleaning* on page 73. ■ The drum unit may be damaged. Put in a new drum unit. See *Replacing the drum unit* on page 69.
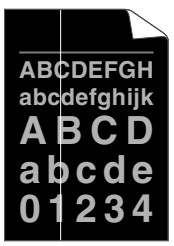 **White lines down the page**	■ Make sure that a torn piece of paper is not inside the printer covering the scanner window. ■ Wipe the scanner window with a soft cloth. See *Cleaning the inside of the printer* on page 74. ■ The toner cartridge may be damaged. Put in a new toner cartridge. See *Replacing the toner cartridge* on page 62. ■ The drum unit may be damaged. Put in a new drum unit. See *Replacing the drum unit* on page 69.

Examples of poor print quality	Recommendation
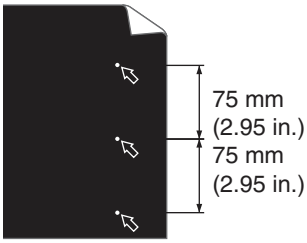 **White Spots on black text and graphics at 75 mm (2.95 in.) intervals** 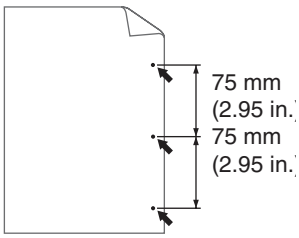 **Black Spots at 75 mm (2.95 in.) intervals**	■ If the problem is not solved after printing a few pages, the drum unit may have glue from a label stuck on the OPC drum surface. **Clean the drum unit as follows:** 1 Put the print sample in front of the drum unit, and find the exact position of the poor print. 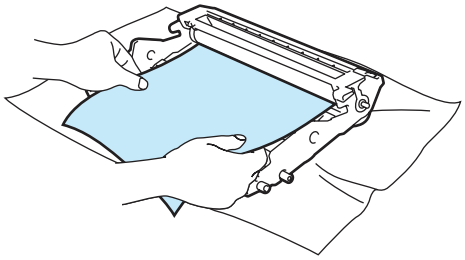 2 Turn the drum unit gear by hand while looking at the surface of the OPC drum (1). 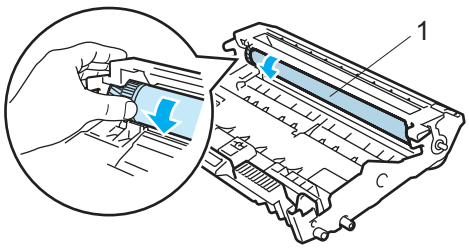 3 When you have found the mark on the drum that matches the print sample, wipe the surface of the OPC drum with a dry cotton swab until the dust or glue on the surface comes off. 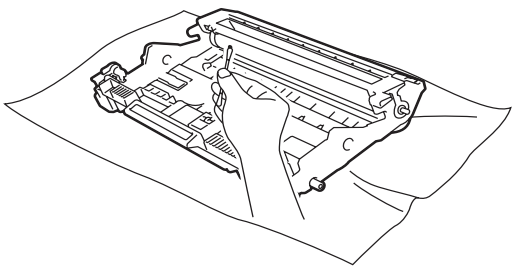 **CAUTION** DO NOT clean the surface of the photosensitive drum with a sharp object. ■ The drum unit may be damaged. Put in a new drum unit. See *Replacing the drum unit* on page 69.

Examples of poor print quality	Recommendation
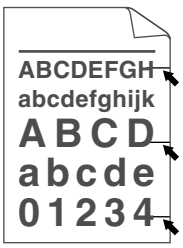 **Black toner marks across the page**	■ The drum unit may be damaged. Put in a new drum unit. See *Replacing the drum unit* on page 69. ■ The toner cartridge may be damaged. Put in a new toner cartridge. See *Replacing the toner cartridge* on page 62. ■ Make sure that you use paper that meets our specifications. See *About paper* on page 5. ■ If you use label sheets for laser printers, the glue from the sheets may sometimes stick to the OPC drum surface. Clean the drum unit. See page 93. ■ Do not use paper that has clips or staples because they will scratch the surface of the drum. ■ If the unpacked drum unit is in direct sunlight or room light, the unit may be damaged.
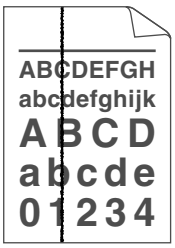 **Black lines down the page** Printed pages have toner stains down the page.	■ Clean the corona wire inside the drum unit by sliding the green tab. See *Cleaning the corona wire* on page 77. ■ Make sure the primary corona wire cleaner is at the home position (▲). ■ The drum unit may be damaged. Put in a new drum unit. See *Replacing the drum unit* on page 69. ■ The toner cartridge may be damaged. Put in a new toner cartridge. See *Replacing the toner cartridge* on page 62. ■ The fuser unit may be smudged. Call your dealer or Brother Customer Service.
 Page skewed	■ Make sure that the paper or other print media is loaded properly in the paper tray and that the guides are not too tight or too loose against the paper stack. ■ Set the paper guides correctly. See *Printing on plain paper and transparencies from the paper tray* on page 9. ■ If you are using the manual feed slot, see *Printing on plain paper, bond paper or transparencies from the Manual feed slot* on page 13. ■ The paper tray may be too full. See *Printing on plain paper and transparencies from the paper tray* on page 9. ■ Check the paper type and quality. See *About paper* on page 5.
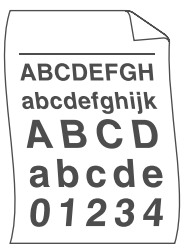 **Curled or wavy**	■ Check the paper type and quality. High temperatures and high humidity will cause paper to curl. See *About paper* on page 5. ■ If you do not use the printer often, the paper may have been in the paper tray too long. Turn over the stack of paper in the paper tray. Also, fan the paper stack and then rotate the paper 180° in the paper tray.

Examples of poor print quality	Recommendation
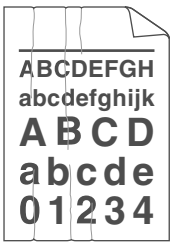 **Wrinkles or creases**	■ Make sure that the paper is loaded properly. See *Printing on plain paper and transparencies from the paper tray* on page 9. ■ Check the paper type and quality. See *About paper* on page 5. ■ Turn over the stack of paper in the tray or try rotating the paper 180° in the input tray.
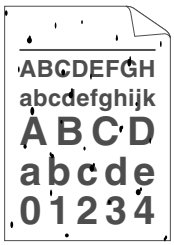 **Poor fixing**	■ Choose **Improve Toner Fixing** mode in the printer driver. See **Improve Print Output** in *Advanced tab* on page 32 (For Windows®) or *Print Settings* on page 41 (For macintosh®). If this selection does not provide enough improvement, select **Thicker paper** in **Media type** settings.

Examples of poor print quality	Recommendation
 Curled	■ Turn the paper over in the paper tray, and print again. (Excluding Letterhead paper) If the problem remains, lift up the support flaps as follows: 1 Lift up the output tray support flap 1 (1). 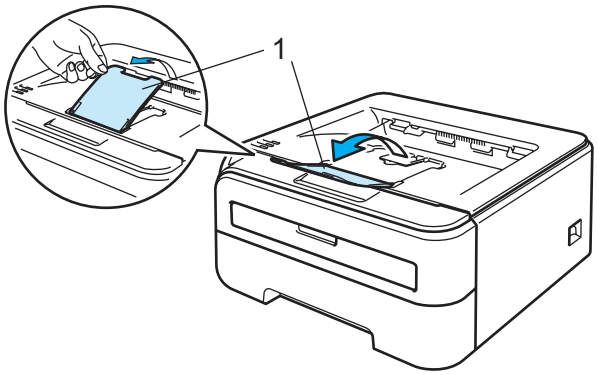 2 Lift up the output tray support flap 2 (2). 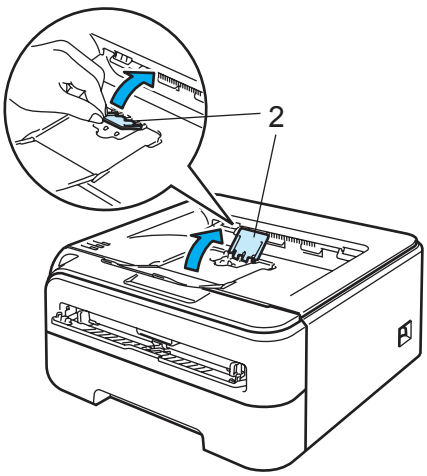 3 Fold down the output tray support flap 1 (1) and fold down the output tray support flap 2 (2). 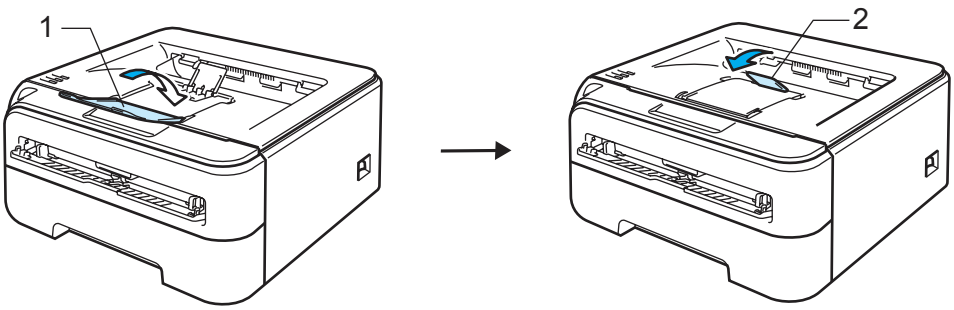 ■ Choose Reduce Paper Curl mode in the printer driver when you do not use our recommended paper. See Improve Print Output in *Advanced tab* on page 32 (For Windows®) or *Print Settings* on page 41 (For Macintosh®).

Solving print problems

Problem	Recommendation
The printer prints unexpectedly or it prints garbage data.	■ Make sure that the printer cable is not too long. We recommend that you use a USB cable that is no longer than 2 meters (6.5 feet). ■ Make sure that the printer cable is not damaged or broken. ■ If you are using an interface-switching device, remove it. Connect your computer directly to your printer, and then try again. ■ Make sure that you have chosen the correct printer driver with 'Set as Default Printer'. ■ Make sure that the printer is not connected to the same port that is also connected to a storage device or scanner. Take away all other devices and connect the port only to the printer. ■ Turn off the **Status Monitor**.
The printer cannot print full pages of a document. An error message **Memory Full** appears.	■ Press the **Go** button to print the remaining data in the printer memory. Cancel the print job if you want to delete the remaining data in the printer memory. (See *Go button* on page 55.) ■ Reduce the complexity of your document or reduce the print resolution.
The printer cannot print full pages of a document. An error message **Print Overrun** appears.	■ Press the **Go** button to print the remaining data in the printer memory. Cancel the print job if you want to delete the remaining data in the printer memory. See *Go button* on page 55. ■ If this does not clear the error, reduce the complexity of your document or cut the print resolution. ■ (HL-2150N / HL-2170W only) Change the following settings in the supplied Windows® driver and try again. The best combination of these settings will vary depending on your document: • Graphics mode [1] • TrueType mode [1] • Use Printer TrueType® Fonts [1] [1] Choose the **Advanced** tab, click the Print Quality icon, and then choose **Manual** in **Print Setting** and click the **Setting...** button.
The headers or footers appear when the document displays on the screen but they do not show up when it is printed.	■ Adjust the top and bottom margins of your document.

Network problems (HL-2150N / HL-2170W only)

For problems concerning using your printer on a Network, see the Network User's Guide on the CD-ROM we have supplied. Click **Documentation** on the menu screen.

The Network User's Guide in HTML format will be installed automatically when you install the driver. Click the **Start** button, **All Programs** [1], your printer, and then User's Guide.

You can also view the manuals in PDF format by accessing the Brother Solutions Center (http://solutions.brother.com).

[1] **Programs** for Windows® 2000 users

Other problems

For Macintosh® with USB

Problem	Recommendation
The printer does not appear in **Print Center** (Mac OS® X 10.2) or **Print Setup Utility** (Mac OS® X 10.3 or greater).	■ Make sure that the printer is turned on. ■ Make sure that the USB interface cable is connected correctly. ■ Make sure the printer driver is installed correctly.
Unable to print from the application.	■ Make sure that the supplied Macintosh® printer driver is installed in the **Hard Disk** and that it is chosen with **Print Center** (Mac OS® X 10.2) or **Print Setup Utility** (Mac OS® X 10.3 or greater).

A Appendix

Printer specifications

Engine

Model		HL-2140	HL-2150N	HL-2170W
Technology		Electrophotographic		
Print speed [1] [2] (A4 size/ Letter size)		Up to 22 ppm (A4 size) [3],Up to 23 ppm (Letter size) [3]		
Resolution	Windows® 2000/XP/ XP Professional x64 Edition, Windows Vista®, Windows Server® 2003/ Windows Server® 2003 x64 Edition	HQ1200 600 dpi 300 dpi		
	DOS	N/A	600 dpi	
	Mac OS® X 10.2.4 or greater	HQ1200 600 dpi 300 dpi		
	Linux	600 dpi 300 dpi		

[1] The printing speed may change depending on the type of document you print.

[2] Print speed may be slower when the printer is connected by wireless LAN (HL-2170W only).

[3] From standard paper tray.

Controller

Model		HL-2140	HL-2150N	HL-2170W
Processor		181MHz		
Memory		8 MB	16 MB	32 MB
Interface		USB [1]	USB [1], 10BASE-T/100BASE-TX Ethernet	USB [1], 10BASE-T/100BASE-TX Ethernet, Wireless LAN IEEE 802.11b/g
Network Connectivity	Protocols	N/A	TCP/IP (Standard 10/100BASE-TX Ethernet) [2]	
	Management tool	N/A	BRAdmin Light [3] BRAdmin Professional [4] Web BRAdmin [5] Web Based Management [6]	
Emulation		GDI	PCL6	
Resident fonts	PCL	N/A	49 scalable fonts, 12 bitmap fonts, 11 bar codes [7]	

1 Compatible with USB 2.0 specification

2 See the Network User's Guide locator on the CD-ROM for details on the supported network protocols.

3 Brother original Windows® and Macintosh® utility for printer and print server management. Install from the supplied CD-ROM.

4 Brother original Windows® utility for printer and print server management. It has more functions than BRAdmin Light. Download from http://solutions.brother.com.

5 Server based management utility. Download from http://solutions.brother.com.

6 Printer and print server management through Web Based Management (Web browser).

7 Code39, Interleaved 2 of 5, EAN-8, EAN-13, UPC-A, UPC-E, EAN-128, Codabar, FIM (US-PostNet), ISBN, Code128

Software

Model		HL-2140	HL-2150N	HL-2170W
Printer driver	Windows®	GDI printer driver for Windows® 2000/XP/XP Professional x64 Edition, Windows Vista®, Windows Server® 2003/Windows Server® 2003 x64 Edition	PCL printer driver for Windows® 2000/XP/XP Professional x64 Edition, Windows Vista®, Windows Server® 2003/Windows Server® 2003 x64 Edition	
	Macintosh®	Macintosh printer driver for Mac OS® X 10.2.4 or greater		
	Linux	Linux driver for CUPS printing system (x86, x64 environment) [1] [2]		
		Linux driver for LPD/LPRng printing system (x86, x64 environment) [1] [2]		
Utilities		Interactive Help [3]	Interactive Help [3] Driver Deployment Wizard [4]	

[1] Download the printer driver for Linux from http://solutions.brother.com.

[2] Depending on Linux distributions, the driver may not be available.

[3] Instructional animations for problem solving.

[4] The Driver Deployment Wizard automates the installation of printers in a peer-to-peer network (Windows® only).

Control panel

Model	HL-2140	HL-2150N	HL-2170W
LED	4 LEDs		
Button	1 button		

Paper handling

Model		HL-2140	HL-2150N	HL-2170W
Paper Input [1]	Manual feed slot	1 sheet		
	Paper tray	250 sheets		
Paper Output [1]	Face-down	100 sheets		
	Face-up	1 sheet		
Duplex		Manual Duplex		

[1] Calculated with 80 g/m2 (20 lb) paper

A

Media specifications

Model		HL-2140	HL-2150N	HL-2170W
Media types	Manual feed slot	Plain paper, Bond paper, Recycled paper, Thin paper, Thick paper, Envelopes, Labels, Transparencies		
	Paper tray	Plain paper, Recycled paper, Thin paper, Transparencies [1]		
Media weights	Manual feed slot	60 to 163 g/m^2 (16 to 43 lb)		
	Paper tray	60 to 105 g/m^2 (16 to 28 lb)		
Media sizes	Manual feed slot	Width: 76.2 to 220mm (3.0 to 8.66 in.) Length: 116 to 406.4 mm (4.57 to 16 in.)		
	Paper tray (Standard)	A4, Letter, Legal [2], B5 (ISO), Executive, A5, A6, B6, Folio		

[1] Up to 10 sheets

[2] Legal size paper is not available in some regions outside the USA and Canada.

A

Supplies

Model		HL-2140	HL-2150N	HL-2170W	Order No.
Toner Cartridge	Starter cartridge	Approx. 1,000 pages A4/Letter pages [1]			N/A
	Standard cartridge	Approx. 1,500 pages A4/Letter pages [1]			TN-330
	High yield cartridge	Approx. 2,600 pages A4/Letter pages [1]			TN-360
Drum Unit		Approx. 12,000 pages A4/Letter pages (1 page / job)			DR-360

[1] Approx. cartridge yield is declared in accordance with ISO/IEC 19752.

Dimensions / weights

Model	HL-2140	HL-2150N	HL-2170W
Dimensions (W × D × H)	368 × 361 × 170.5 mm (14.5 × 14.2 × 6.7 in.)		
Weights	Approx. 5.8 kg (12.8 lb)		

Other

Model			HL-2140	HL-2150N	HL-2170W
Power consumption		Printing	Average 460 W at 25 °C (77 °F)		
		Standby	Average 80 W at 25 °C (77 °F)		
		Sleep	Average 5 W	Average 7 W	Average 8 W
Noise level	Sound Pressure	Printing	51 dB (A)		
		Standby	30 dB (A)		
	Sound power	Printing	LWAd = 6.7 Bell (A)		
		Standby	LWAd = 4.5 Bell (A)		
Ecology	Power save		Yes		
	Toner save [1]		Yes		

[1] We do not recommend Toner Save Mode for printing Photo or Gray Scale images.

A

Computer requirements

Computer Platform & Operating System Version		Processor Minimum Speed	Minimum RAM	Recommended RAM	Hard Disk Space to install
Windows® Operating System	Windows® 2000 Professional	Intel® Pentium® II or equivalent	64 MB	256 MB	50 MB
	Windows® XP Home Edition		128 MB		
	Windows® XP Professional				
	Windows® XP Professional x64 Edition	64-bit (Intel® 64 or AMD64) supported CPU	256 MB	512 MB	
	Windows Vista®	Intel® Pentium® 4 or equivalent 64-bit (Intel® 64 or AMD64) supported CPU	512 MB	1 GB	
	Windows Server® 2003	Intel® Pentium® III or equivalent	256 MB	512 MB	
	Windows Server® 2003 x64 Edition	64-bit (Intel® 64 or AMD64) supported CPU			
Macintosh® Operating System [1]	Mac OS® X 10.2.4 - 10.4.3	PowerPC G4/G5, PowerPC G3 350MHz	128 MB	256 MB	80 MB
	Mac OS® X 10.4.4 or greater	PowerPC G4/G5, Intel® Core™ Processor	512 MB	1 GB	

[1] Third party USB ports are not supported.

Important information for choosing your paper

This section gives information to help you choose paper to use with this printer.

Note

If you use paper that is not recommended, a paper jam or misfeed may occur in the printer. (See *Recommended paper* on page 6.)

Before you buy a large quantity of paper

Make sure that the paper is suitable for the printer.

Paper for plain paper copies

Paper is divided by usage, such as paper for printing and paper for copying. The usage is usually written on the paper's package. Check the package to see whether it is suitable for laser printers. Use paper that is suitable for laser printers.

Basis weight

The basis weight of the paper in general use varies in different countries. We recommend that you use paper that weighs 75 to 90 g/m^2 (20 to 24 lb), although this printer is able to cope with thinner or thicker paper than these weights.

Unit	Europe	USA
g/m^2	80 to 90	75 to 90
lb		20 to 24

Long grain and short grain

The pulp fiber of the paper is aligned during paper manufacturing. Paper can be classified into two types, long grain and short grain.

Long grain paper fibers run in the same direction as the long edge of the paper. Short grain paper fibers run perpendicular to the long edge of the paper. Though most plain paper for copying is long grain, some is short grain. We recommend that you use long grain paper for this printer. Short grain paper is too weak for the paper transport of the printer.

Acid paper and neutralized paper

Paper can be classified as either acid paper or neutralized paper.

Though modern paper manufacture methods started with acid paper, neutralized paper is recently taking the place of acid paper because of environmental issues.

However, many forms of acid paper can be found in recycled paper. We recommend that you use neutralized paper for this printer.

You can use an acid paper check pen to distinguish acid paper from neutral paper.

Print surface

The characteristics of the face side and reverse side of a sheet of paper may vary a little.

Usually, the opening side of the paper ream package is the print side. Follow the indications on the paper package. Typically, the print side is indicated by an arrow.

Moisture content

Moisture content is the amount of water left in the paper after manufacture. It is one of the important characteristics of the paper. This can change greatly depending on the storage environment, although usually paper contains about 5% water by weight. Because paper often absorbs water, the amount of water can sometimes be about 10% in a high humidity environment. When the amount of water increases, the characteristics of the paper changes greatly. The fixing of the toner may become worse. For storage of the paper and during use, we recommend that the humidity of the surrounding environment be between 50% and 60%.

Rough estimate of basis weight

g/m^2	lb	
	Bond	Index
60	16	
64	17	
75	20	
90	24	
105	28	
120	32	
135	36	
161	43	90

Paper size

Paper size	mm	in.
Letter		8.5 × 11 in.
Legal		8.5 × 14 in.
Executive		7.25 × 10.5 in.
A4	210 × 297 mm	
A5	148 × 210 mm	
A5 Long Edge	210 × 148 mm	
A6	105 × 148 mm	
Envelope Monarch		3.875 × 7.5 in.
Envelope Com-10		4.12 × 9.5 in.
Envelope DL	110 × 220 mm	
Envelope C5	162 × 229 mm	
B5 (JIS)	182 × 257 mm	
B5 (ISO)	176 × 250 mm	
B6 (ISO)	125 × 176 mm	
Folio		8.5 × 13 in.
Post Card	100 × 148 mm	
A4 Long	210 × 405 mm	
Envelope DL-L	220 × 110 mm	
3 × 5		3 × 5 in.

Symbol and character sets (HL-2150N / HL-2170W only)

For the HP LaserJet emulation modes, you can choose the symbol and character sets using Web Based Management (Web browser) when connected to a network or the control panel buttons.

How to use Web Based Management (web browser)

To use Web Based Management (Web browser), follow the steps below.

Note

We recommend Microsoft Internet Explorer 6.0® (or greater) or Firefox® 1.0 (or greater) for Windows® and Safari™ 1.0 for Macintosh®. Please also make sure that JavaScript and cookies are always enabled in whichever browser you use. We recommend you upgrade to Safari™ 1.2 or greater to enable JavaScript. To use a web browser, you will need to know the IP address of the print server.

1. Start your web browser.
2. Type `http://printer_ip_address/` into your browser. (Where `printer_ip_address` is the IP address or the node name)
   - For example:

     `http://192.168.1.2/` (if the printer's IP address is 192.168.1.2.)

Note

- If you have edited the hosts file on your computer or are using a Domain Name System, you can also enter the DNS name of the print server. As the print server supports TCP/IP and NetBIOS, you can also enter the NetBIOS name of the print server. The NetBIOS name can be seen on the printer settings page. The NetBIOS name assigned is the first 15 characters of the node name and by default it will appear as "BRNxxxxxxxxxxxx" for a wired network or "BRWxxxxxxxxxxxx" for a wireless network.
- For Macintosh® users, you can also have easy access to Web Based Management by clicking the machine icon on **Status Monitor** screen.

3. Click **Printer Settings**.
4. Enter a user name and a password.

Note

The login name for the Administrator is "`admin`" (case sensitive) and the default password is "`access`".

5. Click **OK**.
6. Choose the **HP LaserJet** tab and click **Font Setup**. Choose a symbol set you want to use from the **Symbol Set** list box.

A

Symbol and character sets list

OCR symbol sets

When you choose the OCR-A or OCR-B font, the matching symbol set is always used.

OCR A (0O)

OCR B (1O)

HP LaserJet mode

ABICOMP Brazil / Portugal (13P)
ABICOMP International (14P)
Desktop (7J)
Greek8 (8G)
HP German (0G)
HP Spanish (1S)
ISO Latin1 (0N)
ISO Latin2 (2N)
ISO Latin5 (5N)
ISO Latin6 (6N)
ISO2 IRV (2U)
ISO4 UK (1E)
ISO5 ASCII (0U)
ISO10 Swedish (3S)
ISO11 Swedish (0S)
ISO14 JIS ASCII (0K)
ISO15 Italian (0I)
ISO16 Portuguese (4S)
ISO17 Spanish (2S)
ISO21 German (1G)
ISO25 French (0F)
ISO57 Chinese (2K)
ISO60 Norwegian1 (0D)
ISO61 Norwegian2 (1D)
ISO69 French (1F)
ISO84 Portuguese (5S)
ISO85 Spanish (6S)
ISO8859 / 7 Latin / Greek (12N)
ISO8859 / 15 Latin (9N)
ISO8859 / 15 Latin / Cyrillic (10N)
Legal (1U)
Math-8 (8M)
MC Text (12J)
MS Publishing (6J)
PC8 (10U)
PC8 Bulgarian (13R)
PC8 D/N (11U)
PC8 Greek Alternate (437G) (14G)
PC8 Latin / Greek (12G)
PC8 PC Nova (27Q)
PC8 Turkish (9T)
PC775 (26U)
PC850 Multilingual (12U)
PC851 Greece (10G)
PC852 East Europe (17U)
PC853 Latin3 (Turkish) (18U)
PC855 Cyrillic (10R)
PC857 Latin5 (Turkish) (16U)
PC858 Multilingual Euro (13U)
PC860 Portugal (20U)
PC861 Iceland (21U)
PC863 Canadian French (23U)
PC865 Nordic (25U)
PC866 Cyrillic (3R)
PC869 Greece (11G)
PC1004 (9J)
Pi Font (15U)
PS Math (5M)

HP LaserJet mode

PS Text (10J)
Roman9 (4U)
Russian-GOST (12R)
Roman8 (8U)
Roman Extension (0E)
Symbol (19M)

Quick reference for bar code control commands (HL-2150N / HL-2170W only)

The printer can print bar codes in the HP LaserJet emulation modes.

Print bar codes or expanded characters

Code	ESC i
Dec	27 105
Hex	1B 69

Format: ESC i n ... n \

Creates bar codes or expanded characters according to the segment of parameters ‘n ... n’. For more information about parameters, see the following Definition of Parameters. This command must end with the ‘ \ ’ code (5CH).

Definition of parameters

This bar code command can have the following parameters in the parameter segment (n ... n). As parameters are effective within the single command syntax ESC i n ... n \, they do not apply in the bar code commands. If certain parameters are not given, they take the preset settings. The last parameter must be the bar code data start (‘b’ or ‘B’) or the expanded character data start (‘l’ or ‘L’). Other parameters can be given in any sequence. Each parameter can start with a lower-case or upper-case character, for example, ‘t0’ or ‘T0’, ‘s3’ or ‘S3’ and so one.

Bar code mode

n = ‘t0’ or ‘T0’	CODE 39 (default)
n = ‘t1’ or ‘T1’	Interleaved 2 of 5
n = ‘t3’ or ‘T3’	FIM (US-Post Net)
n = ‘t4’ or ‘T4’	Post Net (US-Post Net)
n = ‘t5’ or ‘T5’	EAN 8, EAN 13, or UPC A
n = ‘t6’ or ‘T6’	UPC E
n = ‘t9’ or ‘T9’	Codabar
n = ‘t12’ or ‘T12’	Code 128 set A
n = ‘t13’ or ‘T13’	Code 128 set B
n = ‘t14’ or ‘T14’	Code 128 set C
n = ‘t130’ or ‘T130’	ISBN (EAN)
n = ‘t131’ or ‘T131’	ISBN (UPC-E)
n = ‘t132’ or ‘T132’	EAN 128 set A
n = ‘t133’ or ‘T133’	EAN 128 set B
n = ‘t134’ or ‘T134’	EAN 128 set C

This parameter selects the bar code mode as shown above. When n is ‘t5’ or ‘T5’ the bar code mode (EAN 8, EAN 13, or UPC A) varies according to the number of characters in the data.

Bar code, expanded character, line block drawing and box drawing

n = ‘s0’ or ‘S0’	3: 1 (default)
n = ‘s1’ or ‘S1’	2: 1
n = ‘s3’ or ‘S3’	2.5: 1

This parameter chooses the bar code style as above. When the EAN 8, EAN 13, UPC-A, Code 128 or EAN 128 bar code mode is chosen, this bar code style parameter is ignored.

Expanded Character

‘S’

0 = White

1 = Black

2 = Vertical stripes

3 = Horizontal stripes

4 = Cross hatch

For example ‘S’ n1 n2

n1 = Background fill pattern

n2 = Foreground fill pattern

If ‘S’ is followed by only one parameter, the parameter is a foreground fill pattern.

Line block drawing & box drawing

‘S’

1 = Black

2 = Vertical stripes

3 = Horizontal stripes

4 = Cross hatch

Bar code

n = ‘mnnn’ or ‘Mnnn’ (nnn = 0 ~ 32767)

This parameter shows the bar code width. The unit of ‘nnn’ is a percentage.

Bar code human readable line ON or OFF

n = ‘r0’ or ‘R0	Human readable line OFF
n = ‘r1’ or ‘R1	Human readable line ON

Preset:	Human readable line ON
	(1) ‘T5’ or ‘t5’
	(2) ‘T6’ or ‘t6’
	(3) ‘T130’ or ‘t130’
	(4) ‘T131’ or ‘t131’
Preset:	Human readable line OFF
	All others

This parameter shows whether the printer prints the human readable line below the bar code. Human readable characters are always printed with OCR-B font of 10 pitch and all the current character style enhancements are masked. The default setting is determined by the bar code mode selected by ‘t’ or ‘T’.

Quiet zone

n = ‘onnn’ or ‘Onnn’ (nnn = 0 ~ 32767)

Quiet zone is the space on both sides of the bar codes. Its width can be shown using the units that are set by the ‘u’ or ‘U’ parameter. (For the description of ‘u' or ‘U' parameter, see the next section.) The default setting of the quiet-zone width is 1 inch.

Bar code, expanded character unit, line block drawing and box drawing

n = ‘u0’ or ‘U0’	mm (preset)
n = ‘u1’ or ‘U1’	1/10
n = ‘u2’ or ‘U2’	1/100
n = ‘u3’ or ‘U3’	1/12
n = ‘u4’ or ‘U4’	1/120
n = ‘u5’ or ‘U5’	1/10 mm
n = ‘u6’ or ‘U6’	1/300
n = ‘u7’ or ‘U7’	1/720

This parameter shows the measurement units of X-axis offset, Y-axis offset, and bar code height.

Bar code, expanded character, line block drawing and box drawing offset in X-axis

n = ‘xnnn’ or ‘Xnnn’

This parameter shows the offset from the left margin in the ‘u’- or ‘U’-specified unit.

Bar code & expanded character offset in Y-axis

n = ‘ynnn’ or ‘Ynnn’

This parameter shows the downward offset from the current print position in the ‘u’- or ‘U’-specified unit.

Bar code, expanded character, line block drawing and box drawing height

n = ‘hnnn’, ‘Hnnn’, ‘dnnn’, or ‘Dnnn’

1 EAN13, EAN8, UPC-A, ISBN (EAN13, EAN8, UPC-A), ISBN (UPC-E): 22 mm

2 UPC-E: 18 mm

3 Others: 12 mm

Expanded characters → 2.2 mm (preset)

Line block drawing and box drawing → 1 dot

This parameter shows the height of bar codes or expanded characters as shown above. It can start with ‘h’, ‘H’, ‘d’, or ‘D’. The height of bar codes is shown in the ‘u’- or ‘U’-specified unit. The default setting of the bar code height (12 mm, 18 mm or 22 mm) is determined by the bar code mode selected by ‘t’ or ‘T’.

A

Expanded character width, line block drawing and box drawing

n = ‘wnnn’ or ‘Wnnn’

Expanded character → 1.2 mm

Line block drawing and box drawing → 1 dot

This parameter shows the width of expanded characters as shown above.

Expanded character rotation

n = ‘a0’ or ‘A0’	‘Upright (preset)
n = ‘a1’ or ‘A1’	‘Rotated 90 degrees
n = ‘a2’ or ‘A2’	‘Upside down, rotated 180 degrees
n = ‘a3’ or ‘A3’	‘Rotated 270 degrees

Bar code data start

n = ‘b’ or ‘B’

Data that follows ‘b’ or ‘B’ is read in as bar code data. Bar code data must end with the ‘ \ ’ code (5CH), which also ends this command. The acceptable bar code data is determined by the bar code mode selected by ‘t’ or ‘T’.

- When CODE 39 is chosen with the parameter ‘t0’ or ‘T0’

  Forty three characters ‘0’ to ‘9’, ‘A’ to ‘Z’, ‘-’, ‘ . ’, ‘ (space)’, ‘$’, ‘ / ’, ‘+’, and ‘%’ can be accepted as bar code data. Other characters will cause a data error. The number of characters for bar codes is not limited. The bar code data automatically starts and ends with an asterisk ‘ * ’ (start character and stop character). If the received data has an asterisk ‘ * ’ at the beginning or end, the asterisk is regarded as a start character or stop character.

- When Interleaved 2 of 5 is selected with the parameter ‘t1’ or ‘T1’:

  Ten numerical characters ‘0’ to ‘9’ can be accepted as bar code data. Other characters cause a data error. The number of characters for bar codes is not limited. This mode of bar codes needs even characters. If the bar code data has odd characters, ‘0’ is automatically added to the end of the bar code data.

- When FIM (US-Post Net) is selected with the parameter ‘t3’ or ‘T3’

  Characters ‘A’ to ‘D’ are valid and one digit of data can be printed. Upper-case and lower-case alphabet characters can be accepted.

- When Post Net (US-Post Net) is selected with the parameter ‘t4’ or ‘T4’

  Numbers ‘0’ to ‘9' can be data and it must end with a check digit. ‘?’ can be used instead of the check digit.

- When EAN 8, EAN 13, or UPC A is selected with the parameter ‘t5’ or ‘T5’

  Ten numbers ‘0’ to ‘9’ can be accepted as bar code data. The number of characters for bar codes is limited as follows:

  EAN 8: Total 8 digits (7 digits + 1 check digit)

  EAN 13: Total 13 digits (12 digits + 1 check digit)

  UPC A: Total 12 digits (11 digits + 1 check digit)

  A number of characters other than those stated above will cause a data error that results in the bar code data being printed as normal print data. If the check digit is not correct, the printer decides the correct check digit automatically so that the correct bar code data will be printed. When EAN13 is selected, adding ‘+’ and a two-digit or five-digit number after the data can create an add-on code.

- When UPC-E is selected with the parameter ‘t6’ or ‘T6’:

  The numbers ‘0’ to ‘9’ can be accepted as bar code data.

Eight digits [1] [2]	(standard format) The first character must be ‘0’ and the data must end with a check digit. Total eight digits = ‘0’ plus 6 digits plus 1 check digit.
Six digits [2]	The first character and the last check digit are removed from the eight digit data.

[1] ‘?’ can be used instead of a check digit.

[2] Adding ‘+’ and two-digit or five-digit number after the data creates an add-on code.

- When Codebar is chosen with the parameter ‘t9’ or ‘T9’

  Characters ‘0’ to ‘9’, ‘-’, ‘ . ’, ‘$’, ‘/’, ‘+’, ‘ : ’ can be printed. Characters ‘A’ to ‘D’ can be printed as a start-stop code, which can be upper case or lower case. If there is no start-stop code, errors will happen. A check digit cannot be added and using ‘?’ causes errors.

- When Code 128 Set A, Set B, or Set C is selected with the parameter ‘t12’ or ‘T12’, ‘t13’ or ‘T13’, or ‘t14’ or ‘T14’

  Code 128 sets A, B and C can be individually selected. Set A shows characters Hex 00 to 5F. Set B includes characters Hex 20 to 7F. Set C includes the pairs 00 to 99. Switching is allowed between the code sets by sending %A, %B, or %C. FNC 1, 2, 3, and 4 are produced with %1, %2, %3, and %4. The SHIFT code, %S, allows temporary switching (for one character only) from set A to set B and vice versa. The ‘%’ character can be encoded by sending it twice.

- When ISBN (EAN) is selected with the parameter ‘t130’ or ‘T130’

  The same rules apply as for ‘t5’ or ‘T5’.

- When ISBN (UPC-E) is selected with the parameter ‘t131’ or ‘T131’:

  The same rules apply as for ‘t6’ or ‘T6’.
- When EAN 128 set A, set B or set C is selected with the parameter ‘t132’ or ‘T132’, ‘t133’ or ‘T133’ or ‘t134’ or ‘T134’

  The same rules apply as for ‘t12’ or ‘T12’, ‘t13’ or ‘T13’, or ‘t14’ or ‘T14’.

Box drawing

ESC i ... E (or e)

‘E’ or ‘e’ is a terminator.

Line block drawing

ESC i ... V (or v)

‘V’ or ‘v’ is a terminator.

Expanded character data start

n = ‘l’ or ‘L’

Data that follows ‘l’ or ‘L’ is read as expanded character data (or labeling data). Expanded character data must end with the ‘ \ ’ code (5CH), which also ends this command.

Example Program Listings

```
WIDTH "LPT1:",255
'CODE 39
LPRINT CHR$(27);"it0r1s0o0x00y00bCODE39?\";
'Interleaved 2 of 5
LPRINT CHR$(27);"it1r1s0o0x00y20b123456?\";
'FIM
LPRINT CHR$(27);"it3r1o0x00y40bA\";
'Post Net
LPRINT CHR$(27);"it4r1o0x00y60b1234567890?\";
'EAN-8
LPRINT CHR$(27);"it5r1o0x00y70b1234567?\";
'UPC-A
LPRINT CHR$(27);"it5r1o0x50y70b12345678901?\";
'EAN-13
LPRINT CHR$(27);"it5r1o0x100y70b123456789012?\";
'UPC-E
LPRINT CHR$(27);"it6r1o0x150y70b0123456?\";
```

```
'Codabar
LPRINT CHR$(27);"it9r1s0o0x00y100bA123456A\";
'Code 128 set A
LPRINT CHR$(27);"it12r1o0x00y120bCODE128A12345?\";
'Code 128 set B
LPRINT CHR$(27);"it13r1o0x00y140bCODE128B12345?\";
'Code 128 set C
LPRINT CHR$(27);"it14r1o0x00y160b";CHR$(1);CHR$(2);"?\";
'ISBN(EAN)
LPRINTCHR$(27);"it130r1o0x00y180b123456789012?+12345\";
'EAN 128 set A
LPRINT CHR$(27);"it132r1o0x00y210b1234567890?\";
LPRINT CHR$(12)
END
```

B Appendix (for Europe and Other Countries)

Brother numbers

IMPORTANT

For technical and operational help, you must call the country where you bought the printer. Calls must be made ***from within*** that country.

Register your product

By registering your Brother product, you will be recorded as the original owner of the product.

Your registration with Brother:

- may serve as a confirmation of the purchase date of your product should you lose your receipt;
- may support an insurance claim by you in the event of product loss covered by insurance; and,
- will help us to notify you of enhancements to your product and special offers.

Please complete the Brother Warranty Registration or, for your convenience and most efficient way to register your new product, register on-line at

http://www.brother.com/registration/

Frequently asked questions (FAQs)

The Brother Solutions Center is our one-stop resource for all your printer needs. You can download the latest drivers, software and utilities, read FAQs and troubleshooting tips to learn how to get the most from your Brother product.

http://solutions.brother.com

You can check here for Brother driver updates.

Customer Service

Visit http://www.brother.com for contact information on your local Brother office.

Service center locations

For service centres in Europe, contact your local Brother Office. Address and telephone contact information for European offices can be found at http://www.brother.com by selecting your country.

Internet Addresses

Brother Global Web Site: http://www.brother.com

For Frequently Asked Questions (FAQs), Product Support and Technical Questions, and Driver Updates and Utilities: http://solutions.brother.com

Important information: regulations

Radio interference (220 to 240 volt model only)

This printer follows EN55022 (CISPR Publication 22)/Class B.

IEC 60825-1 specification (220 to 240 volt model only)

This printer is a Class 1 laser product as defined in IEC 60825-1 +A2:2001 specifications. The label shown below is attached in countries where it is needed.

This printer has a Class 3B laser diode which produces invisible laser radiation in the laser unit. You should not open the laser unit under any circumstances.

Caution

Use of controls or adjustments or performance of procedures other than those specified in this User's Guide may result in hazardous invisible radiation exposure.

For Finland and Sweden

LUOKAN 1 LASERLAITE

KLASS 1 LASER APPARAT

Varoitus!

Laitteen käyttäminen muulla kuin tässä käyttöohjeessa mainitulla tavalla saattaa altistaa käyttäjän turvallisuusluokan 1 ylittävälle näkymättömälle lasersäteilylle.

Varning

Om apparaten används på annat sätt än i denna Bruksanvisning specificerats, kan användaren utsättas för osynlig laserstrålning, som överskrider gränsen för laserklass 1.

Internal laser radiation

Maximum radiation power:	10 mW
Wave length:	780 - 800 nm
Laser class:	Class 3B

IMPORTANT - for your safety

To ensure safe operation, the supplied three-pin plug must be inserted only into a standard three-pin power outlet that is properly grounded through the standard electrical wiring.

Extension cords used with this printer must be three-pin plug type and correctly wired to provide grounding. Incorrectly wired extension cords may cause personal injury and equipment damage.

The fact that the equipment operates satisfactorily does not imply that the power is grounded and that the installation is completely safe. For your safety, if in any doubt about the effective grounding of the power, call a qualified electrician.

This product should be connected to an AC power source within the range indicated on the rating label. DO NOT connect it to a DC power source. If you are not sure, contact a qualified electrician.

Disconnect device

You must install this printer near a power outlet that is easily accessible. In case of an emergency, you must disconnect the power cord from the power outlet to shut off the power completely.

Caution for LAN connection (HL-2150N / HL-2170W only)

Connect this product to a LAN connection that is not subjected to overvoltages.

IT power system (For Norway only)

This product is also designed for an IT power system with phase-to-phase voltage 230V.

Wiring information (for UK)

Important

If you need to replace the plug fuse, fit a fuse that is approved by ASTA to BS1362 with the same rating as the original fuse.

Always replace the fuse cover. Never use a plug that does not have a cover.

Warning - This printer must be earthed.

The wires in the mains lead are coloured in line with the following code:

- **Green and Yellow: Earth**
- **Blue: Neutral**
- **Brown: Live**

If in any doubt, call a qualified electrician.

Maschinenlärminformations- Verordnung 3. GPSGV (For Germany only)

Der höchste Schalldruckpegel beträgt 70 dB(A) oder weniger gemäß EN ISO 7779.

EC Declaration of Conformity

brother

EC Declaration of Conformity

Manufacturer
Brother Industries Ltd.,
15-1, Naeshiro-cho, Mizuho-ku, Nagoya 467-8561, Japan

Plant
Brother Technology (Shenzhen) Ltd.,
NO6 Gold Garden Ind. Nanling Buji, Longgang, Shenzhen, China

Herewith declare that:
Products description : **Laser Printer**
Product Name : **HL-2140, HL-2150N**
Model Number : **HL-21**
are in conformity with provisions of the Directives applied : Low Voltage Directive 2006/95/EEC and the Electromagnetic Compatibility Directive 2004/108/EC.

Products description : **Laser Printer**
Product Name : **HL-2170W**
Model Number : **HL-21**
is in conformity with provisions of the R & TTE Directive (1999/5/EC) and we declare compliance with the following standards :

Harmonized standards applied :

Safety	EN60950-1:2001+A11: 2004	
EMC	EN55022: 1998 +A1: 2000 +A2: 2003	Class B
	EN55024: 1998 +A1: 2001 +A2: 2003	
	EN61000-3-2: 2006	
	EN61000-3-3: 1995 +A1: 2001 +A2 : 2005	
Radio	EN301 489-1 V1.6.1	
	EN301 489-17 V1.2.1	
	EN300 328 V1.6.1	

※ Radio applies to HL-2170W only.

Year in which CE marking was first affixed : 2007
Issued by : Brother Industries, Ltd.
Date : 30th September, 2007
Place : Nagoya, Japan
Signature :

J. Shiota

Junji Shiota
General Manager
Quality Management Dept.
Printing & Solutions Company

B

C Appendix (for USA and Canada)

Brother numbers

IMPORTANT

For technical and operational help, you must call the country where you bought the printer. Calls must be made ***from within*** that country.

Register your product

By registering your product with Brother International Corporation, you will be recorded as the original owner of the product.

Your registration with Brother:

- may serve as a confirmation of the purchase date of your product should you lose your receipt;
- may support an insurance claim by you in the event of product loss covered by insurance; and,
- will help us notify you of enhancements to your product and special offers.

Please complete the Brother Warranty Registration or, for your convenience and most efficient way to register your new product, register on-line at

http://www.brother.com/registration/

FAQs (frequently asked questions)

The Brother Solutions Center is our one-stop resource for all your printer needs. You can download the latest software and utilities and read FAQs and troubleshooting tips to learn how to get the most from your Brother product.

http://solutions.brother.com

You can check here for Brother driver updates.

Customer Service

In USA:	1-877-BROTHER (1-877-276-8437)
In Canada:	1-877-BROTHER

If you have comments or suggestions, please write us at:

In USA:	Printer Customer Support Brother International Corporation 26250 Enterprise Ct. # 250 Lake Forest, CA 92630
In Canada:	Brother International Corporation (Canada), Ltd. - Marketing Dept. 1, rue Hotel de Ville Dollard-des-Ormeaux, PQ, Canada H9B 3H6

Service center locator (USA only)

For the location of a Brother authorized service center, call 1-877-BROTHER (1-877-276-8437).

Service center locations (Canada only)

For the location of a Brother authorized service center, call 1-877-BROTHER.

Internet addresses

Brother Global Web Site: http://www.brother.com

For Frequently Asked Questions (FAQs), Product Support and Technical Questions, and Driver Updates and Utilities: http://solutions.brother.com

For Brother Accessories & Supplies:

In USA :	http://www.brothermall.com
In Canada :	http://www.brother.ca

Ordering supplies

For best quality results use only genuine Brother supplies, which are available at most Brother retailers. If you cannot find the supplies you need and you have a Visa, MasterCard, Discover, or American Express credit card, you can order supplies directly from Brother. (You can visit us online for a complete selection of the Brother accessories and supplies that are available for purchase.)

Note

In Canada, only Visa and MasterCard are accepted.

In USA: 1-877-552-MALL (1-877-552-6255)
1-800-947-1445 (fax)
http://www.brothermall.com

In Canada: 1-877-BROTHER
http://www.brother.ca

Description	Item
Toner Cartridges	TN-330 (Standard, prints approx. 1,500 pages) [1] TN-360 (High Yield, prints approx. 2,600 pages) [1]
Drum Unit	DR-360

[1] Approx. cartridge yield is declared in accordance with ISO/IEC 19752.

Important information: regulations

Federal Communications Commission (FCC) Declaration of Conformity (USA only)

Responsible Party:	Brother International Corporation 100 Somerset Corporate Boulevard P.O. Box 6911 Bridgewater, NJ 08807-0911 USA Telephone: (908) 704-1700

declares, that the products

Product name:	Laser Printer HL-2140, HL-2150N and HL-2170W
Model number:	HL-21

complies with Part 15 of the FCC Rules. Operation is subject to the following two conditions: (1) This device may not cause harmful interference, and (2) this device must accept any interference received, including interference that may cause undesired operation.

This equipment has been tested and found to comply with the limits for a Class B digital device, pursuant to Part 15 of the FCC Rules. These limits are designed to provide reasonable protection against harmful interference in a residential installation. This equipment generates, uses, and can radiate radio frequency energy and, if not installed and used in accordance with the instructions, may cause harmful interference to radio communications. However, there is no guarantee that interference will not occur in a particular installation. If this equipment does cause harmful interference to radio or television reception, which can be determined by turning the equipment off and on, the user is encouraged to try to correct the interference by one or more of the following measures:

- Reorient or relocate the receiving antenna.
- Increase the separation between the equipment and receiver.
- Connect the equipment into an outlet on a circuit different from that to which the receiver is connected.
- Consult the dealer or an experienced radio/TV technician for help.

Important

A shielded interface cable should be used to ensure compliance with the limits for a Class B digital device. Changes or modifications not expressly approved by Brother Industries, Ltd. could void the user's authority to operate the equipment.

Industry Canada Compliance Statement (Canada only)

This Class B digital apparatus complies with Canadian ICES-003.

Cet appareil numérique de la classe B est conforme à la norme NMB-003 du Canada.

International ENERGY STAR® Compliance Statement

The purpose of the International ENERGY STAR® Program is to promote the development and popularization of energy-efficient office equipment. As an ENERGY STAR® Partner, Brother Industries, Ltd. has determined that this product meets the ENERGY STAR® guidelines for energy efficiency.

Laser notices

Laser safety (110 to 120 volt model only)

This printer is certified as a Class 1 laser product under the U.S. Department of Health and Human Services (DHHS) Radiation Performance Standard according to the Radiation Control for Health and Safety Act of 1968. This means that the printer does not produce hazardous laser radiation.

Since radiation emitted inside the printer is completely confined within protective housings and external covers, the laser beam cannot escape from the machine during any phase of user operation.

FDA regulations (110 to 120 volt model only)

The U.S. Food and Drug Administration (FDA) has implemented regulations for laser products manufactured on and after August 2, 1976. Compliance is mandatory for products marketed in the United States. The following label on the back of the printer indicates compliance with the FDA regulations and must be attached to laser products marketed in the United States.

MANUFACTURED:

Brother Technology (Shenzhen) Ltd.

NO6 Gold Garden Ind., Nanling Buji, Longgang, Shenzhen, China

This product complies with FDA performance standards for laser products except for deviations pursuant to Laser Notice No.50, dated June 24, 2007.

C

Caution

Use of controls, adjustments or performance of procedures other than those specified in this User's Guide may result in hazardous invisible radiation exposure.

Internal laser radiation

Maximum radiation power:	10 mW
Wave length:	780 - 800 nm
Laser class:	Class 3B

IMPORTANT - for your safety

To ensure safe operation, the supplied three-pin plug must be inserted only into a standard three-pin power outlet that is properly grounded through the standard electrical wiring.

Extension cords used with this printer must be three-pin plug type and correctly wired to provide proper grounding. Incorrectly wired extension cords may cause personal injury and equipment damage.

The fact that the equipment operates satisfactorily does not imply that the power is grounded and that the installation is completely safe. For your safety, if in any doubt about the effective grounding of the power, call a qualified electrician.

This product should be connected to an AC power source within the range indicated on the rating label. DO NOT connect it to a DC power source. If you are not sure, contact a qualified electrician.

Disconnect device

You must install this printer near a power outlet that is easily accessible. In case of an emergency, you must disconnect the AC power cord from the AC power outlet to shut off the power completely.

Caution for LAN connection (HL-2150N / HL-2170W only)

Connect this product to a LAN connection that is not subjected to overvoltages.

D Index

A

Automatic Interface Selection 47

B

Bar code control 110
BRAdmin Light 46
BRAdmin Professional 46
Brother Numbers (USA/Canada) 122, 123

C

Carton contents 1
Cartridge position error 50
Character sets 107
Cleaning 73
Computer requirements 103
Consumables 60
Control panel 48, 101
Corona wire 67, 77, 78
Cover open 51

D

Device options 34
Dimensions 102
Domain 107
Driver Deployment Wizard 46
Drum error 52
Drum life end soon 51
Drum unit 68
Duplex printing 22

E

Emulation 100
Envelopes 7, 17
Error messages 80, 82

F

Fonts 58, 100

G

Go buttons 55

I

Interface 100

J

Job cancel 55

L

LEDs 48
Linux 26

M

Macintosh® 39, 98
Manual feed slot 13
manual feed slot 23
Media specifications 102
Media type 5
Memory 100
Memory full 51

N

Network 46
Network connectivity 100
Network default setting 59
No paper 51

O

OPC drum 93

P

Paper 5, 104
Paper handling 101
Paper jams 51, 85
PCL printer driver 29
Plain paper 6
Power supply 4
Print overrun 51
Print quality 91
Print test page 56
Printer driver 29, 45, 101
Printer settings 57
Processor 100

R

Register your product 117, 122
Remote Printer Console 47
Reprint 35, 55

S

Scanner window 76
Service call 53
Service centers (USA/Canada) 123
Service centres (Europe and other countries) 117
Software 46
Specifications 99
Status Monitor 44, 80
Symbol 107

T

Toner cartridge 61
Toner life end 50, 62
Toner low 50
Trademarks iv
Tray Setting tab 37
Troubleshooting 79

U

Unprintable area 8
Utilities 101

W

Watermark 33
Web Based Management
  Web browser 46
Web BRAdmin 46
Weights 102
Windows® 29

D