brother®

Brother Color Printer

USER'S GUIDE

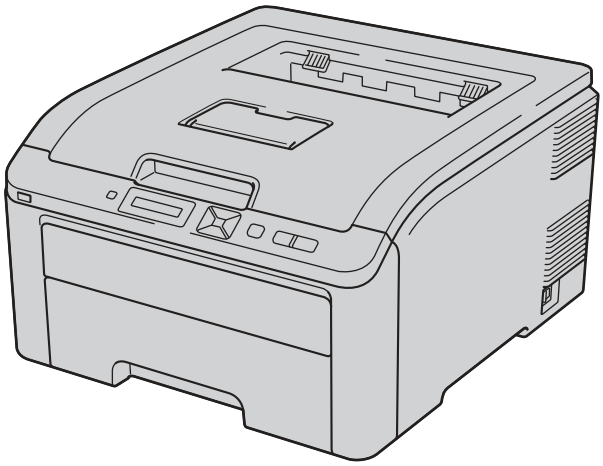

HL-3045CN
HL-3075CW

For visually-impaired users

You can read this manual with Screen Reader 'text-to-speech' software.

You must set up the hardware and install the driver before you can use the printer.

Please use the Quick Setup Guide to set up the printer. You can find a printed copy in the box.

Please read this User's Guide thoroughly before you use the printer. Keep the CD-ROM in a convenient place so you can use it quickly if you need to.

Please visit us at http://solutions.brother.com/ where you can get product support, the latest driver updates and utilities, and answers to frequently asked questions (FAQs) and technical questions.

Note: Not all models are available in all countries.

Version 0

USA/CAN

Symbols and conventions used in the documentation

The following symbols and conventions are used throughout the documentation.

Bold	Bold typeface identifies specific keys on the product's control panel or on the computer screen.
Italics	Italicized typeface emphasizes an important point or refers you to a related topic.
`Courier New`	Text in Courier New font identifies messages on the LCD of the product.

WARNING

WARNING indicates a potentially hazardous situation which, if not avoided, could result in death or serious injuries.

CAUTION

CAUTION indicates a potentially hazardous situation which, if not avoided, may result in minor or moderate injuries.

IMPORTANT

IMPORTANT indicates a potentially hazardous situation which, if not avoided, may result in damage to property or loss of product functionality.

Notes tell you how you should respond to a situation that may arise or give tips about how the operation works with other features.

Electrical Hazard icons alert you to possible electrical shock.

Improper Setup icons alert you to devices and operations that are not compatible with the product.

Hot Surface icons warn you not to touch product parts that are hot.

Follow all warnings and instructions marked on the product.

Table of Contents

1 Printing Methods 1

About paper 1
Type and size of paper 1
Recommended paper 2
Unprintable area 4
Printing methods 5
Printing on plain paper 5
Printing on thick paper, labels and envelopes 13
Duplex printing 18
Guidelines for printing on both sides of the paper 18
Manual duplex printing 19
Booklet printing (for Windows® printer driver) 22
Printing photos from a digital camera (HL-3075CW only) 23
PictBridge requirements 23
Setting your digital camera 23
Printing images 24
Connecting a camera as a storage device 24
DPOF printing 25
Printing images with Secure Function Lock 2.0 enabled (HL-3075CW only) 25
Printing data from a USB flash memory drive with direct print (HL-3075CW only) 27
Supported file formats 27
Direct Print default settings 27
Creating a PRN or PostScript® 3™ (HL-3075CW only) file for direct printing 28
Printing data directly from the USB flash memory drive 29
Printing data directly from the USB flash memory drive with Secure Function Lock 2.0 enabled (HL-3075CW only) 30

2 Driver and Software 32

Printer driver 32
Features in the printer driver (for Windows®) 35
Using the custom monochrome printer driver (for Windows®) 47
Using the BR-Script3 printer driver (PostScript® 3™ language emulation for Windows®) (HL-3075CW only) 48
Features in the printer driver (for Macintosh) 55
Using the BR-Script3 printer driver (Post Script® 3™ language emulation for Macintosh) (HL-3075CW only) 65
Installing the BR-Script3 printer driver 65
Uninstalling the printer driver 69
Printer driver for Windows® 69
Printer driver for Macintosh 70
Software 71
Software for networks 71
About emulation modes (HL-3075CW only) 73
Automatic emulation selection (HL-3075CW only) 73
Automatic interface selection 73

3 Control Panel 74

Control panel 74
Buttons 74
Go 75
Cancel 75
Secure Print 75
+ or - button 75
Back 76
OK 76
LEDs 76
LCD 76
Back light (HL-3075CW only) 77
LCD messages 77
Reprinting documents 78
Printing Secure data 79
Using the control panel LCD menu 81
Menu table 82
Default settings 93
Frequency 95
Calibration 95
Auto Registration 96
Manual Registration 97

4 Option 98

SO-DIMM 98
Installing extra memory 99

5 Routine Maintenance 101

Replacing the consumable items 101
Toner cartridges 103
Drum units 111
Belt unit 117
Waste toner box 121
Cleaning 127
Cleaning the outside of the printer 127
Cleaning the LED head 129
Cleaning the corona wires 130
Cleaning the drum unit 133
Cleaning the paper pick-up roller 139

6 Troubleshooting 141

Identifying your problem 141
LCD messages 142
Paper handling 145
Paper jams and how to clear them 146
Jam Tray 1 (Paper jam inside the paper tray) 147
Jam Rear (Paper jam behind the back cover) 148
Jam Inside (Paper jam inside the printer) 150
Improving the print quality 153
Solving print problems 160
Network problems 160
Other problems 161
For Macintosh with USB 161
BR-Script 3 (HL-3075CW only) 161

A Appendix 162

Printer specifications 162
Engine 162
Controller 163
Software 164
Direct Print feature 164
Control panel 165
Paper handling 165
Media specifications 165
Supplies 166
Dimensions / weights 166
Other 167
Computer requirements 168
Important information for choosing your paper 169
Symbol and character sets (HL-3075CW only) 172
How to use Web Based Management (web browser) 172
Symbol and character sets list 173
Quick reference for bar code control commands (HL-3075CW only) 175
Print bar codes or expanded characters 175
Libtiff Copyright and License 183

B Appendix (for Europe and Other Countries) 184

Brother numbers 184

C Appendix (for USA and Canada) 185

Brother numbers 185

D Index 188

1 Printing Methods

About paper

Type and size of paper

The printer loads paper from the installed paper tray or the manual feed slot.

The names for the paper trays in the printer driver and this guide are as follows:

Paper tray	Tray 1
Manual feed slot	Manual

When looking at this page on the CD-ROM, you can jump to the page for each printing method by clicking ⓘ in the table.

Media type	Tray 1	Manual	Choose the media type from the printer driver
Plain paper 75 g/m^2 to 105 g/m^2 (20 to 28 lb)	ⓘ	ⓘ	**Plain Paper**
Recycled paper	ⓘ	ⓘ	**Recycled Paper**
Bond paper Rough paper– 60 g/m^2 to 163 g/m^2 (16 to 43 lb)		ⓘ 60 g/m^2 to 163 g/m^2 (16 to 43 lb)	**Bond Paper**
Thin paper 60 g/m^2 to 75 g/m^2 (16 to 20 lb)	ⓘ	ⓘ	**Thin Paper**
Thick paper 105 g/m^2 to 163 g/m^2 (28 to 43 lb)		ⓘ	**Thick Paper** or **Thicker Paper**
Labels		ⓘ A4 or Letter	**Label**
Envelopes		ⓘ	**Envelopes** **Env. Thin** **Env. Thick**

	Tray 1	Manual
Paper size	A4, Letter, Legal, B5 (ISO), Executive, A5, A5 (Long Edge), A6, B6 (ISO), Folio	Width: 76.2 to 220 mm (3.0 to 8.66 in.) Length: 116 to 406.4 mm (4.57 to 16 in.)
Number of sheets (80 g/m^2 / 20 lb)	250 sheets	1 sheet

Recommended paper

	Europe	USA
Plain paper	Xerox Premier TCF 80 g/m^2 Xerox Business 80 g/m^2	Xerox 4200 20 lb Hammermill Laser Print 24 lb (90g/m^2)
Recycled paper	Xerox Recycled Supreme 80 g/m^2	(No specific brand recommended)
Labels	Avery laser label L7163	Avery laser labels white #5160
Envelope	Antalis River series (DL)	(No specific brand recommended)

- Before you buy a lot of paper, test a small quantity to make sure that the paper is suitable.
- Use paper that is made for plain-paper copying.
- Use paper that is 75 to 90 g/m^2 (20 to 24 lb).
- Use neutral paper. Do not use acidic or alkaline paper.
- Use long-grain paper.
- Use paper with a moisture content of approximately 5%.
- This printer can use recycled paper that meets DIN 19309 specifications.

IMPORTANT

- DO NOT use ink jet paper because it may cause a paper jam or damage your printer.
- If you use paper that is not recommended, a paper jam or misfeed may occur in the printer.

Note

- Preprinted paper must use ink that can withstand the temperature of the printer's fusing process (200 degrees centigrade).
- If you use bond paper, paper having a rough surface or paper that is wrinkled or creased, the paper may exhibit degraded performance.

(To help you choose which paper to use with this printer, see *Important information for choosing your paper* on page 169.)

Types of envelopes

Most envelopes will be suitable for your printer. However, some envelopes may have feed and print quality problems due to the way they have been made. A suitable envelope should have edges with straight, well-creased folds and the leading edge should not be thicker than two pieces of paper. The envelope should lie flat and not be of baggy or flimsy construction. You should buy quality envelopes from a supplier who understands that you will be using the envelopes in a laser printer. Before you print a lot of envelopes, test one to make sure that the print results are what you want.

Brother does not recommend a particular envelope because envelope manufacturers may change the envelope specifications. You are responsible for the quality and performance of the envelopes you use.

- Do not use damaged, curled, wrinkled, irregularly shaped, extremely shiny or textured envelopes.
- Do not use envelopes with clasps, snaps, tie strings, self-adhesive components, windows, holes, cutouts or perforations.
- Do not use envelopes that are of a baggy construction, not sharply creased, embossed (have raised writing on them) or pre-printed on the inside.
- Do not use envelopes that were previously printed by a laser / LED printer.
- Do not use envelopes that cannot be arranged when put in a pile.
- Do not use envelopes that are made of paper that weighs more than the paper weight specifications for the printer.
- Do not use envelopes that have been badly made, with edges that are not straight or consistently square.

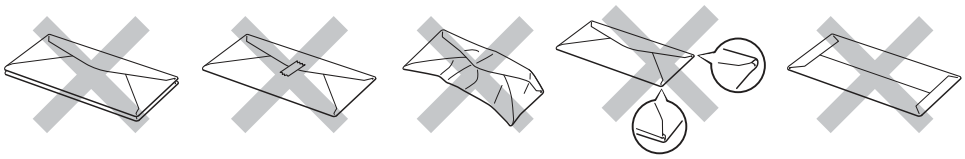

If you use any of the types of envelopes listed above, they may damage your printer. This damage is not covered under any Brother warranty or service agreement.

Note

- Do not put different types of paper in the paper tray at the same time because it may cause paper jams or misfeeds.
- Do not print envelopes using duplex printing.
- You must choose the same paper size from your application as the paper in the tray.

Unprintable area

The area of the paper that cannot be printed on is shown in the table below:

Note

The area that cannot be printed on may vary depending on the paper size and the printer driver you are using. The unprintable area shown below is for A4 / Letter size paper.

Portrait

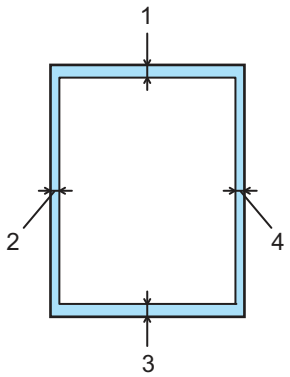

Landscape

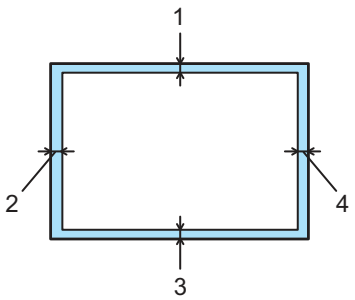

	Windows® Printer Driver and Macintosh printer driver **BRScript Printer Driver for Windows® and Macintosh (HL-3075CW only)**
1	4.23 mm (0.16 in.)
2	4.23 mm (0.16 in.)
3	4.23 mm (0.16 in.)
4	4.23 mm (0.16 in.)

Printing methods

Printing on plain paper

Printing on plain paper from the paper tray

(For the recommended paper to use, see *About paper* on page 1.)

1. Pull the paper tray completely out of the printer.

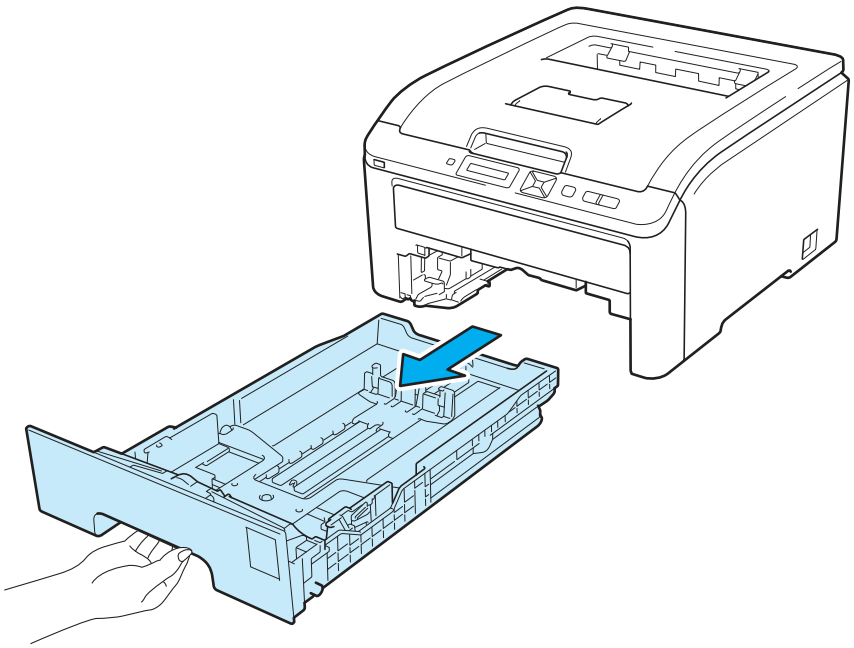

2. While pressing the green paper-guide release lever, slide the paper guides to fit the paper size. Make sure that the guides are firmly in the slots.

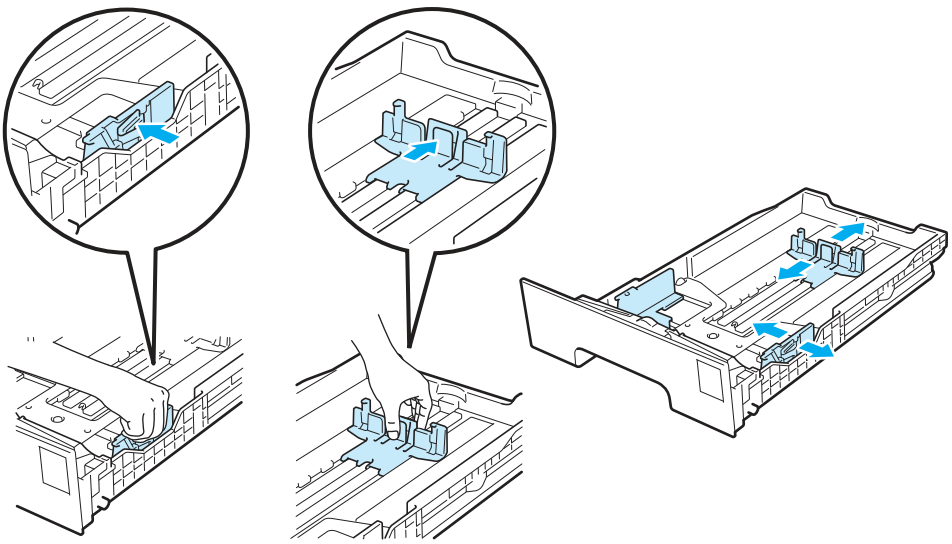

3 Put paper in the tray, and make sure that the paper is below the maximum paper mark (▼▼▼) (1). The side to be printed on must be face down.

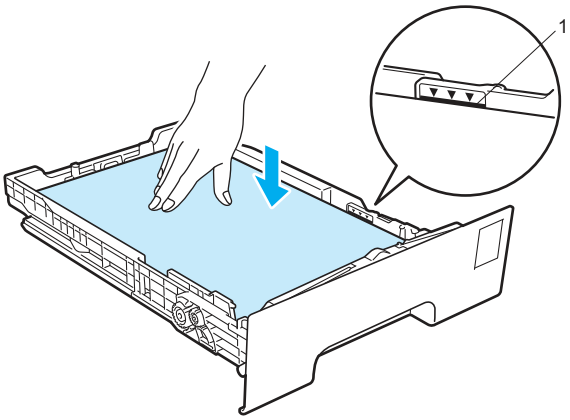

IMPORTANT

Make sure the paper guides touch the sides of the paper so it will feed properly.

4 Put the paper tray firmly back in the printer. Make sure that it is completely inserted into the printer.

5 Lift up the support flap (1) to prevent paper from sliding off the face-down output tray, or remove each page as soon as it comes out of the printer.

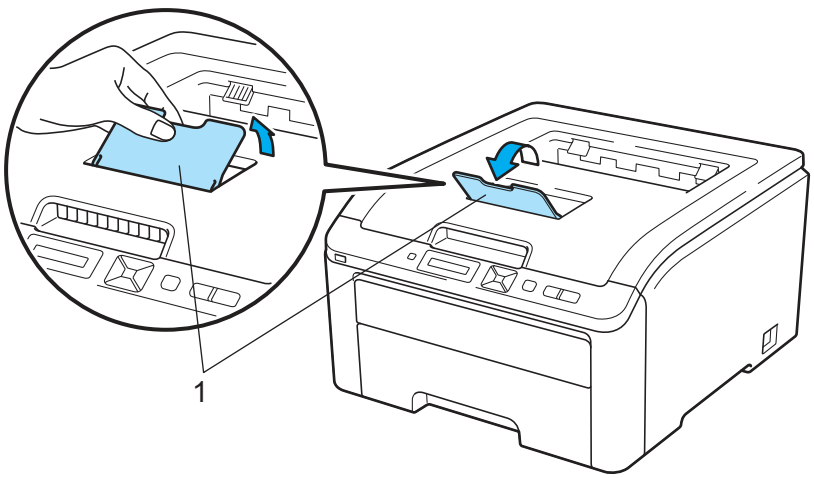

6 Choose the following from the printer driver:
Paper Size .....(1)
Media Type .....(2)
Paper Source .....(3)
and any other settings you may want to make. (See *Driver and Software* in Chapter 2.)

■ **Windows® printer driver**

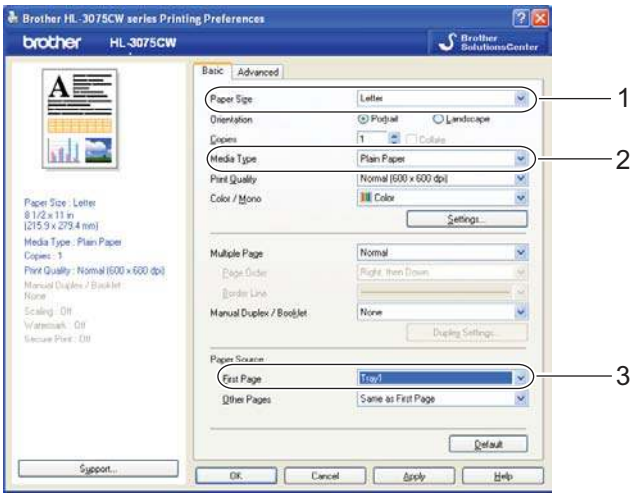

■ **BR-Script printer driver for Windows® (HL-3075CW only)**

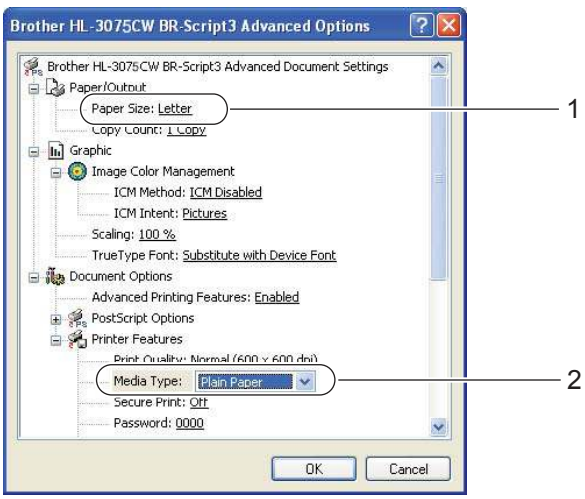

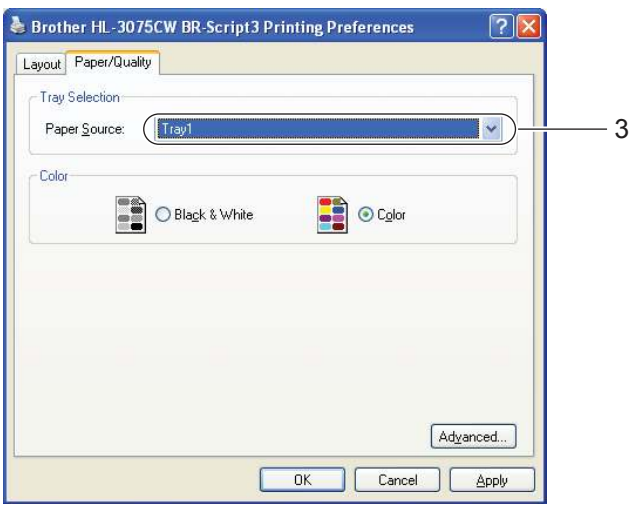

Note

To use the BR-Script printer driver for Windows® you must install the driver using the Custom Install from the CD-ROM.

■ Macintosh printer driver

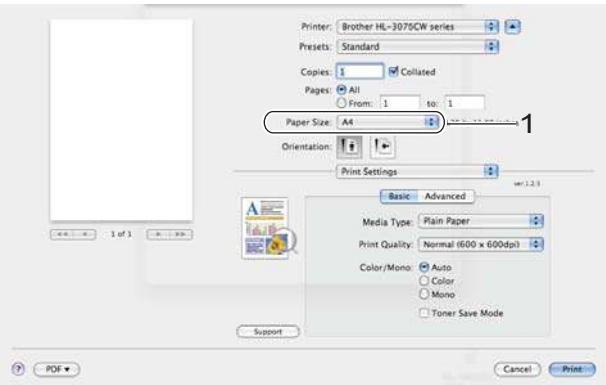

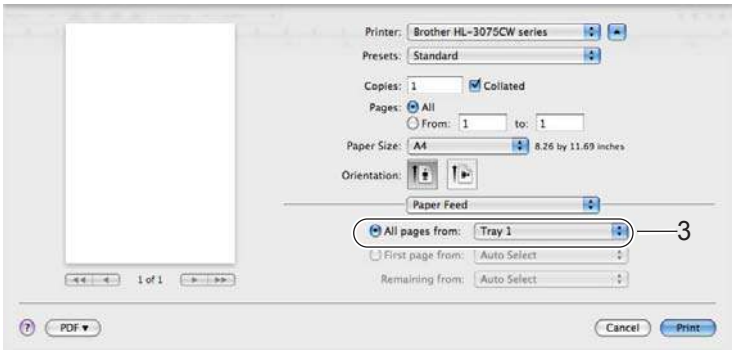

7 Send the print data to the printer.

Printing on plain paper or bond paper from the Manual feed slot

(For the recommended paper to use, see *About paper* on page 1.)

Note

The printer automatically turns on the Manual Feed mode when you put paper in the manual feed slot.

1. Lift up the support flap (1) to prevent paper from sliding off the face-down output tray, or remove each page as soon as it comes out of the printer.

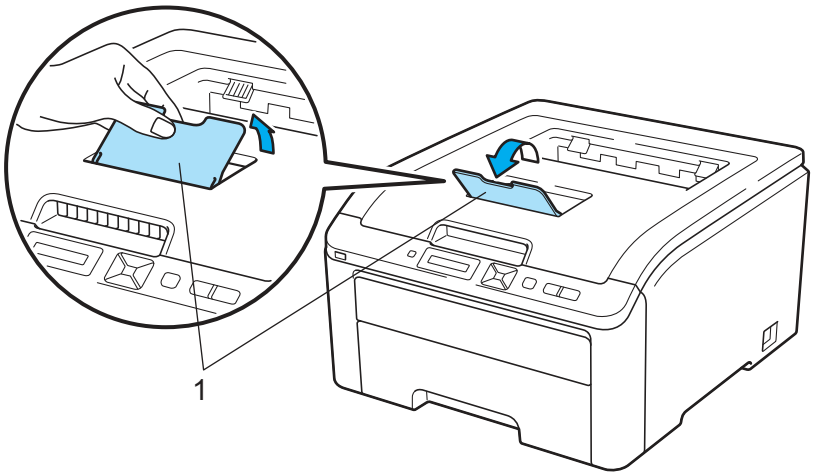

2. Open the manual feed slot cover.

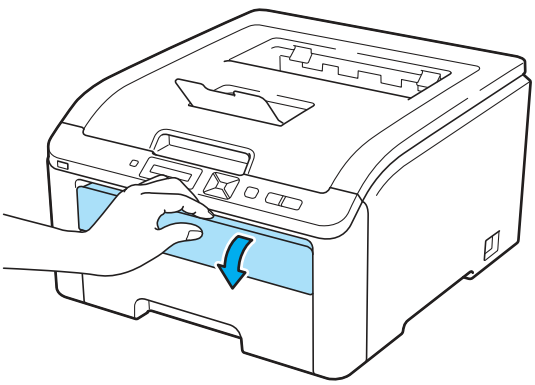

3 Using both hands, slide the manual feed slot paper guides to the width of the paper that you are going to use.

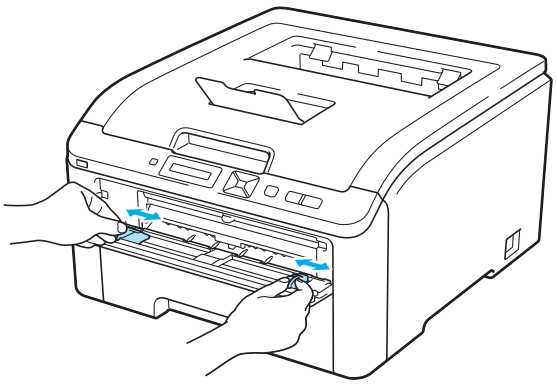

4 Using both hands, put one piece of paper in the manual feed slot until the front edge of the paper touches the paper feed roller. Wait until the machine automatically feeds the paper. When you feel the machine pull in the paper, let go.

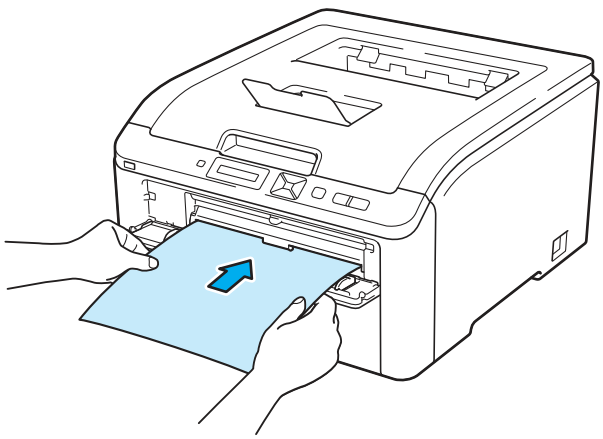

Note

- Put the paper into the manual feed slot with the side to be printed face up.
- Make sure that the paper is straight and in the correct position on the manual feed slot. If it is not, the paper may not be fed properly, resulting in a skewed printout or a paper jam.
- Pull the paper out completely when you retry putting the paper into the manual feed slot.
- Do not put more than one piece of paper in the manual feed slot at any one time, as it may cause a jam.
- If you put paper or other print media in the manual feed slot before the printer is in the Ready state, an error may occur and the printer will stop printing.

5 Choose the following from the printer driver:
Paper Size .....(1)
Media Type .....(2)
Paper Source .....(3)
and any other settings you may want to make. (See *Driver and Software* in Chapter 2.).

■ **Windows® printer driver**

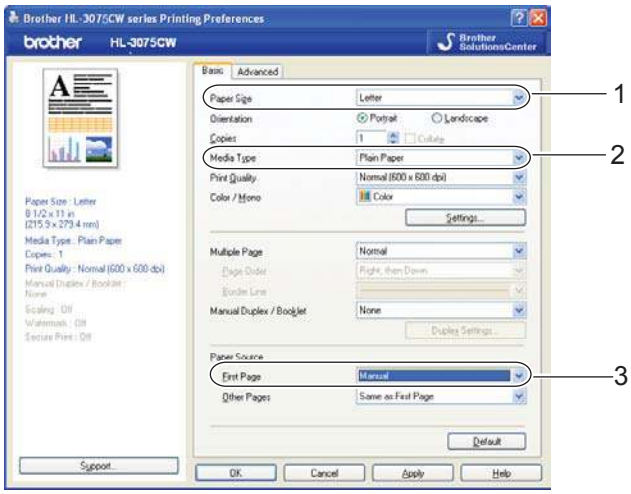

■ **BR-Script printer driver (HL-3075CW only)**

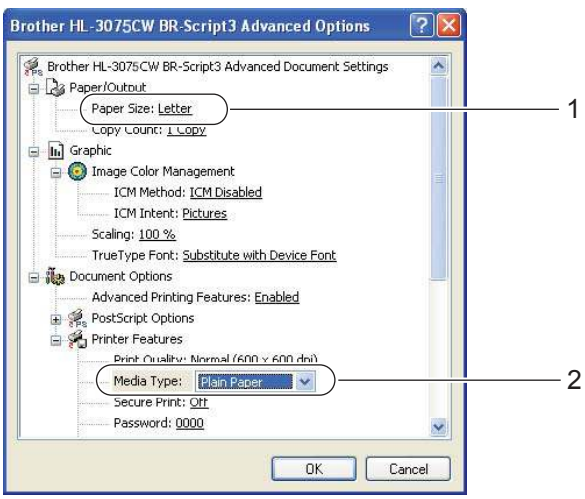

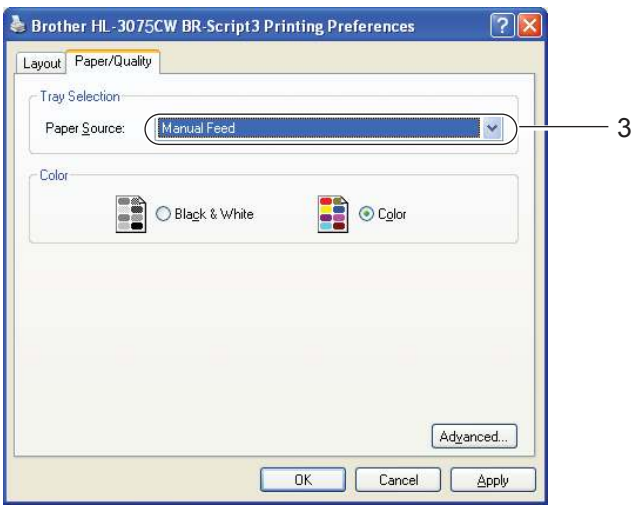

Note

To use the BR-Script printer driver for Windows® you must install the driver using the Custom Install from the CD-ROM.

■ Macintosh printer driver

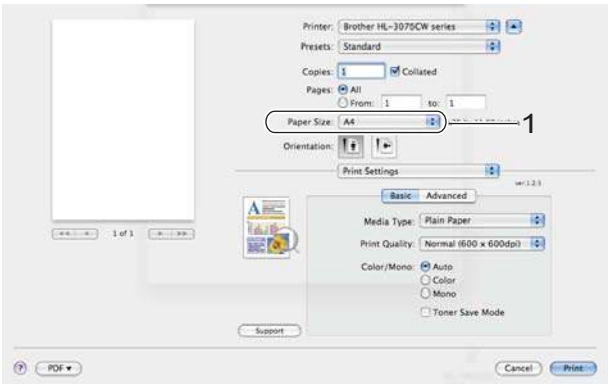

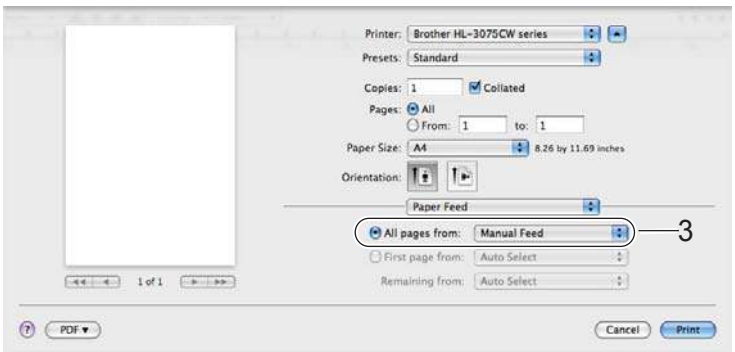

6 Send the print data to the printer.

7 After the LCD shows `Manual Feed`, put in the next sheet of paper as in step ❹ and repeat for each page you want to print.

Note

The LCD will show `Manual Feed` until a sheet of paper is put in the manual feed slot.

Printing on thick paper, labels and envelopes

When the back output tray is pulled down, the printer has a straight paper path from the manual feed slot through to the back of the printer. Use this paper feed and output method when you want to print on thick paper, labels or envelopes. (For the recommended paper to use, see *About paper* on page 1 and *Types of envelopes* on page 3.)

1. Open the back cover (back output tray).

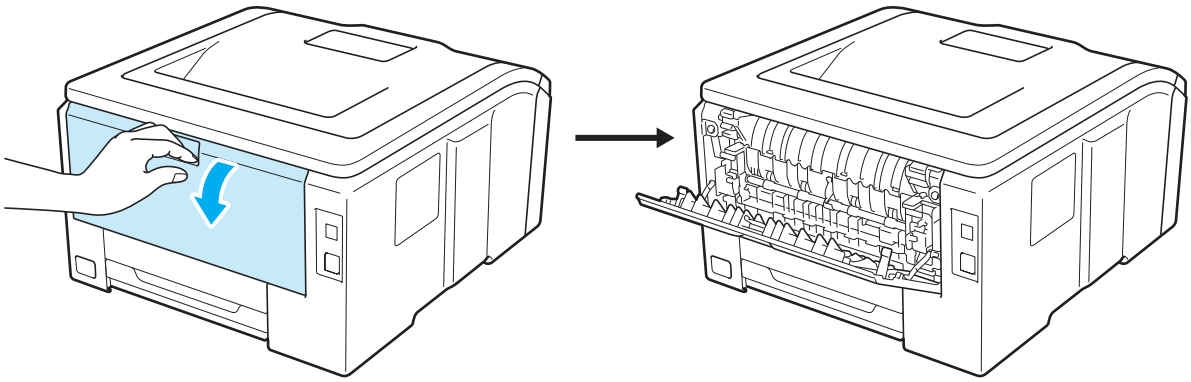

2. Open the manual feed slot cover.

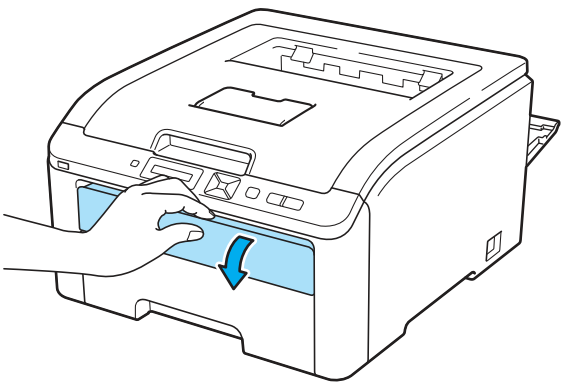

3. <For printing envelopes only>
   Pull down the two gray levers, one on the left-hand side and one on the right-hand side, toward you as shown in the illustration below.

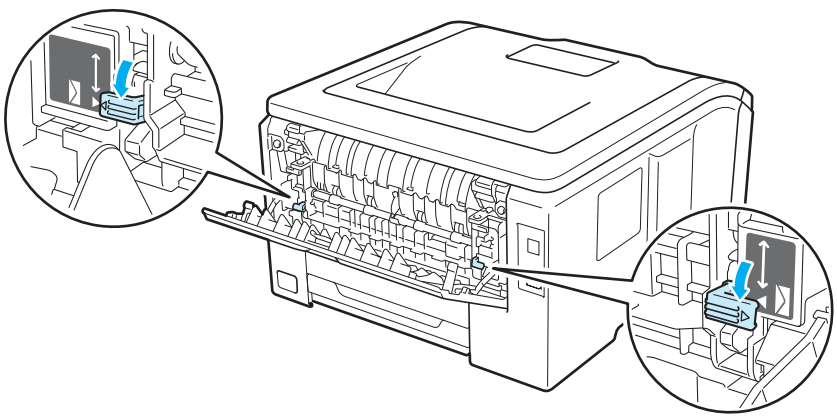

4 Using both hands, slide the manual feed slot paper guides to the width of the paper that you are going to use.

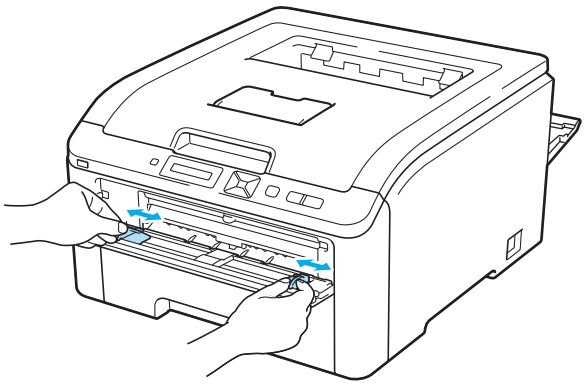

5 Using both hands, put one piece of paper or one envelope in the manual feed slot until the front edge of it touches the paper feed roller. When you feel the machine automatically pull it in, let go.

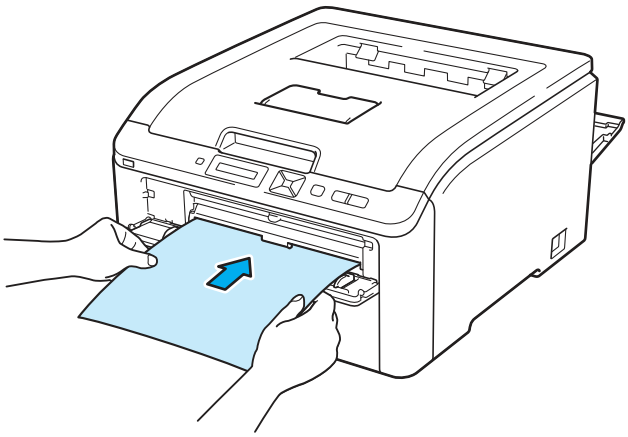

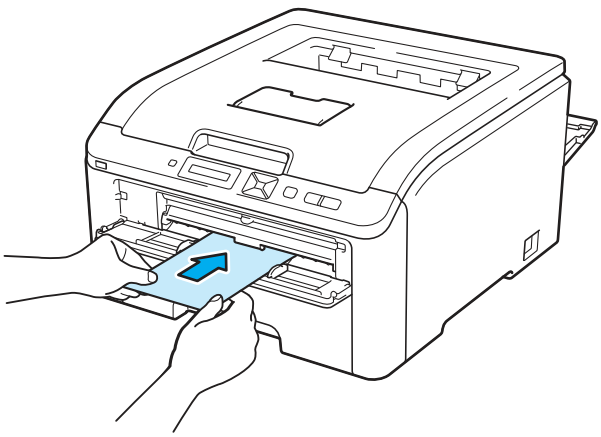

Note

- Put the paper or envelope into the manual feed slot with the side to be printed face up.
- Make sure that the paper or envelope is straight and in the proper position on the manual feed slot. If it is not, the paper or the envelope may not be fed properly, resulting in a skewed printout or a paper jam.
- Pull the paper or envelope out completely when you retry putting the paper into the manual feed slot.
- Do not put more than one piece of paper or one envelope in the manual feed slot at any one time, as it may cause a jam.
- If you put paper or other print media in the manual feed slot before the printer is in the Ready state, an error may occur and the printer will stop printing.

6 Choose the following from the printer driver:
Paper Size .....(1)
Media Type .....(2)
Paper Source .....(3)
and any other settings you may want to make. (See *Driver and Software* in Chapter 2.).

■ **Windows® printer driver**

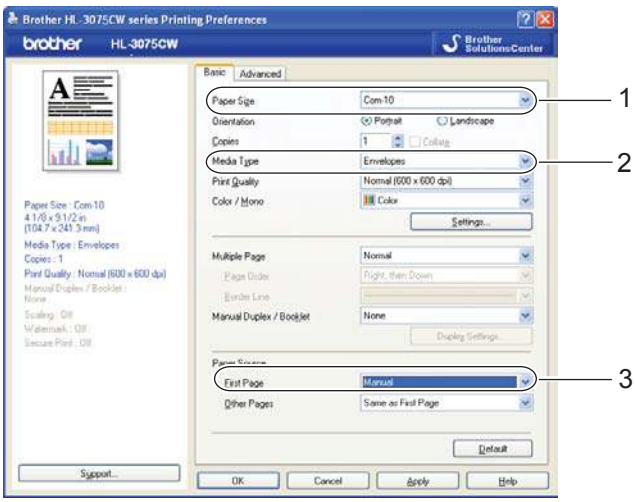

■ **BR-Script printer driver (HL-3075CW only)**

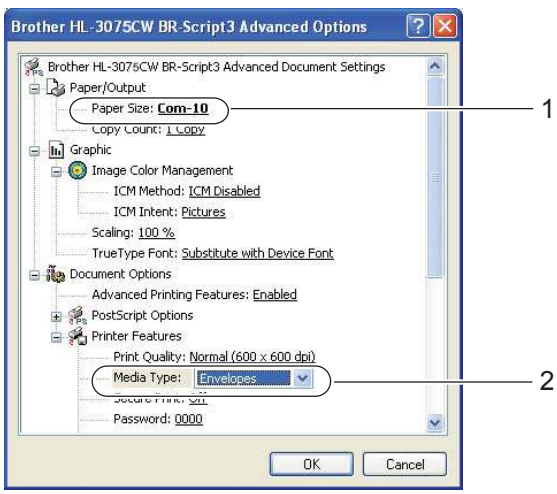

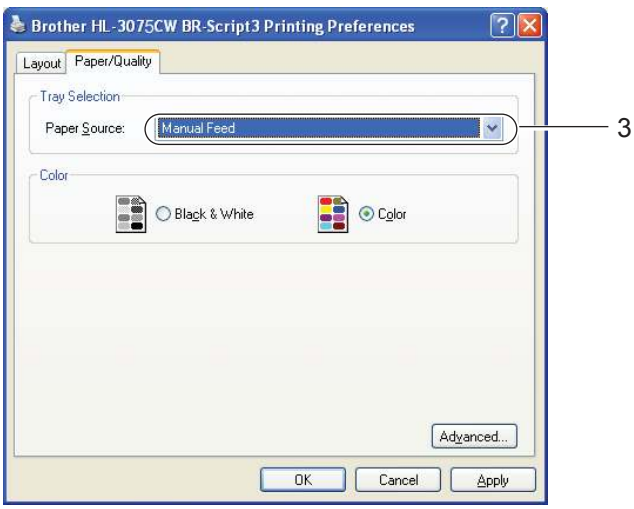

Note

- To use the BR-Script printer driver for Windows® you must install the driver using the Custom Install from the CD-ROM.
- When you use Envelope #10, choose **Com-10** for the **Paper Size**.
- For other envelopes which are not listed in the printer driver, such as Envelope #9 or Envelope C6, choose **User Defined...** (for Windows® printer driver), **PostScript Custom Page Size** (for BR-Script printer driver for Windows®) or **Custom Page Sizes** (for Macintosh printer driver). For more information on envelope sizes, see *Paper size* on page 171.

■ **Macintosh printer driver**

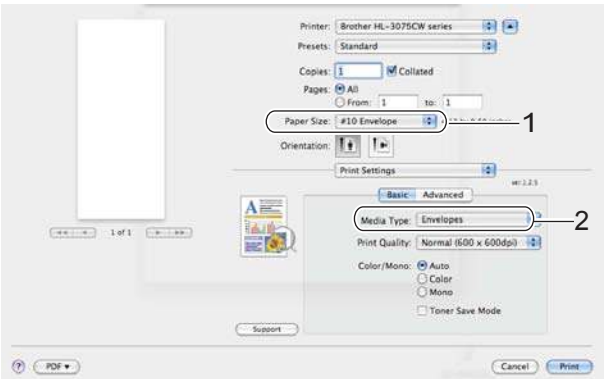

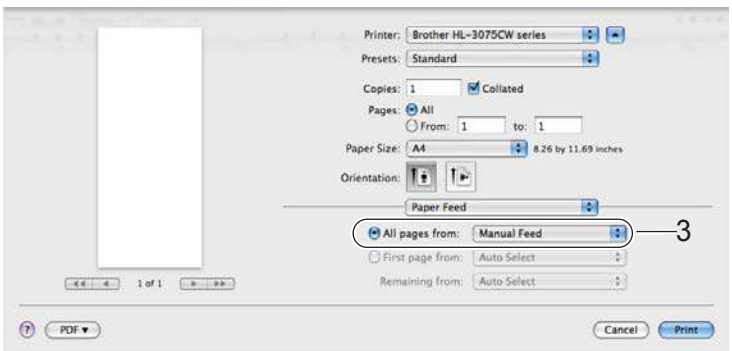

7 Send the print data to the printer.

8 After the LCD shows `Manual Feed`, put in the next sheet of paper or envelope as shown in step ❺. Repeat for each page that you want to print.

9 <For printing envelopes only>
When you have finished printing, reset the two gray levers which are pulled down at step ❸ back to the original position.

Note

- The LCD will show `Manual Feed` until a sheet of paper or an envelope is put in the manual feed slot.
- Remove each sheet or envelope at once after printing. Stacking the sheets or envelopes may cause the paper to jam or curl.

Note

- If envelopes get smudged during printing set the **Media Type** to **Thick Paper** or **Thicker Paper** to increase the fixing temperature.
- If the envelopes are creased after they are printed, see *Improving the print quality* on page 153.
- (For Windows® users) If DL size double flap envelopes are creased after printing, choose **DL Long Edge** in **Paper Size**, from the **Basic** tab. Put a new DL size double-flap envelope in the manual feed slot with the longest edge of the envelope in first, then print again.

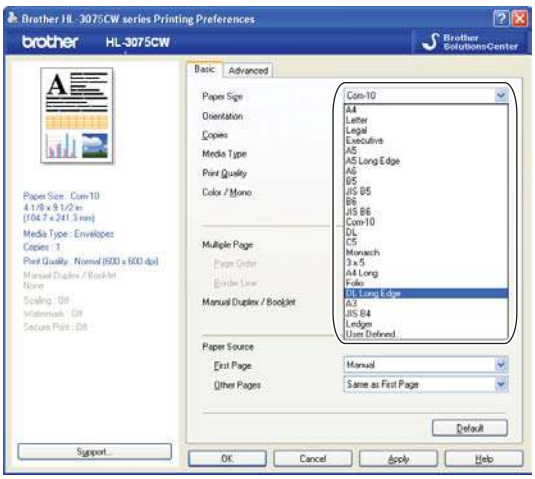

- Envelope joints that are sealed by the manufacturer should be secure.
- All sides of the envelope should be properly folded without wrinkles or creases.

Duplex printing

The supplied printer drivers all enable duplex printing. For more information about how to choose the settings, see the **Help** text in the printer driver.

Guidelines for printing on both sides of the paper

- If the paper is thin, it may wrinkle.
- If paper is curled, straighten it and then put it back in the paper tray or the manual feed slot.
- If the paper is not feeding properly, it may be curled. Remove the paper and straighten it.
- When you use the manual duplex function, it is possible that there may be paper jams or poor print quality. (If there is a paper jam, see *Paper jams and how to clear them* on page 146. If you have a print quality problem, see *Improving the print quality* on page 153.)

Note

- The screens in this section are from Windows® XP. The screens on your computer may vary depending on your operating system.
- Make sure that the paper tray is completely inserted into the printer.
- You should use plain paper, recycled paper or thin paper. Do not use bond paper.

Manual duplex printing

- The BR-Script printer driver (PostScript® 3™ emulation) does not support manual duplex printing.
- If you are using the Macintosh Printer Driver, see *Manual Duplex Printing* on page 63.

Manual duplex printing from the paper tray

1. In the printer driver choose the **Basic** tab, and choose the **Manual Duplex** printing mode from the **Manual Duplex / Booklet** setting, and then from the **Basic** tab choose the Paper Source to be **Tray1**.
2. Send the data to the printer, then click **OK** on the computer screen. The printer will automatically print all the even-numbered pages on one side of the paper first.

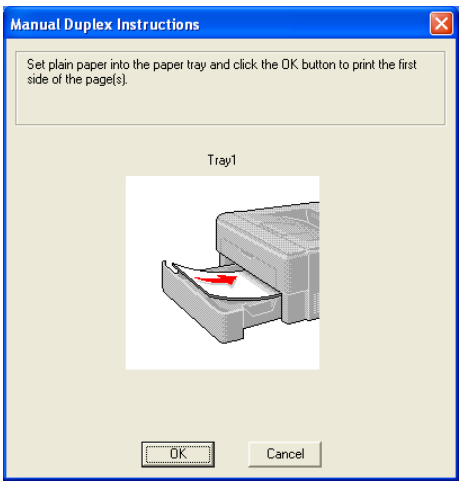

3. Remove the printed even-numbered pages from the output tray and then, in the same order [1], put them back in the paper tray with the side to be printed on (blank side) face down. Follow the instructions on the computer screen.

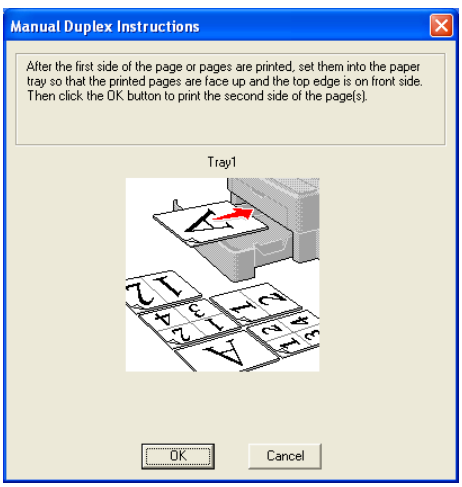

[1] When printing to the Back output tray put the paper back in the tray in the opposite order it came out.

4 The printer will now automatically print all the odd-numbered pages on the other side of the paper.

Note

When you put paper in the paper tray, first empty the tray. Next, put the printed pages in the tray, with the printed side face up. (Do not add the printed pages to the top of a stack of unprinted paper.)

Manual duplex printing from the manual feed slot

Note

You should use plain paper and recycled paper. Do not use bond paper.

1 In the printer driver choose the **Basic** tab, and choose the **Manual Duplex** printing mode from the **Manual Duplex / Booklet** setting, and then from the **Basic** tab choose the Paper Source to be **Manual**.

2 Open the manual feed slot cover.

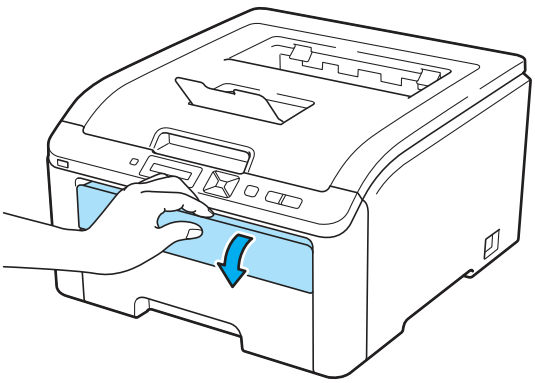

3 Using both hands, slide the manual feed slot paper guides to the width of the paper that you are going to use.

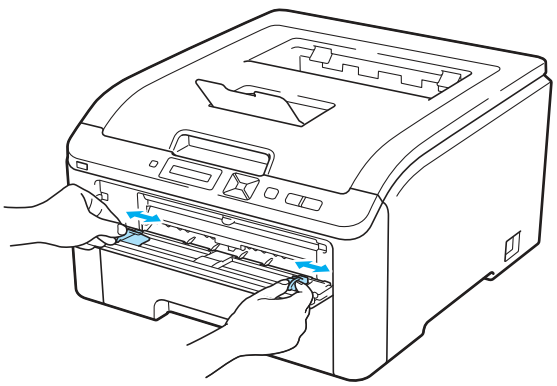

4 Using both hands put the paper in the manual feed slot with the side that is going to be printed on first facing up. Send the data to the printer, then follow the instructions on the computer screen. Repeat this step until you have printed all the even-numbered pages.

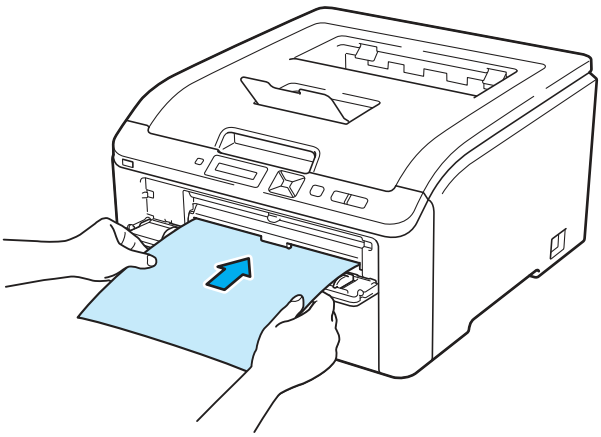

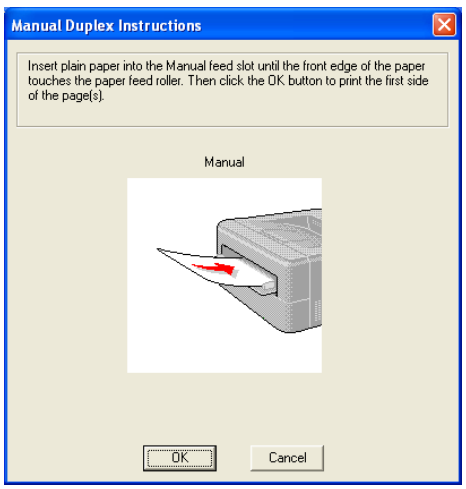

5 Remove the printed even-numbered pages from the output tray and then, in the same order [1], put them back into the manual feed slot. Put the paper with the side to be printed on (the blank side) face up. Follow the instructions on the computer screen.

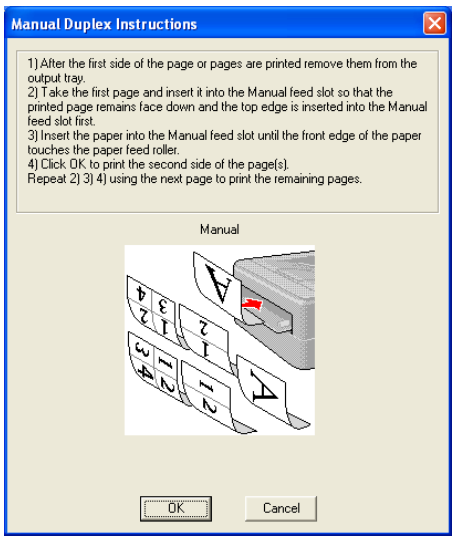

[1] When printing to the Back output tray put the paper back in the tray in the opposite order it came out.

Paper orientation for manual duplex printing

The printer prints the second page first.

If you print 10 pages on 5 sheets of paper, it will print page 2 and then page 1 on the first sheet of paper. It will print page 4 and then page 3 on the second sheet of paper. It will print page 6 and then page 5 on the third sheet of paper, and so on.

When doing manual duplex printing, the paper must be put in the paper tray in the following way:

- For the paper tray:
  - Put the side to be printed on face down with the leading edge (top) of the paper at the front of the tray.
  - To print on the second side, put the paper face up, with the leading edge (top) of the paper at the front of the tray.
  - If letterhead paper is used, put the paper in the tray with the heading face up at the front of the tray.
  - To print on the second side, put the heading face down at the front of the tray.
- For the manual feed slot:
  - Put the side to be printed on face up with the leading edge (top) of the paper in first.
  - To print on the second side, put the paper face down, with the leading edge (top) of the paper in first.
  - If letterhead paper is used, put it in with the heading face down and in first.
  - To print on the second side, put the heading face up and in first.

Booklet printing (for Windows® printer driver)

1. Put paper in the paper tray or manual feed slot.
2. Open the **Properties** dialog box in the printer driver.
3. From the **General** tab, choose the **Printing Preferences** button.
4. From the **Basic** tab, choose **Booklet** from the **Manual Duplex / Booklet** setting. If you want to change the booklet printing setting, click **Duplex Settings**.
5. Click **OK** .

Printing photos from a digital camera (HL-3075CW only)

Your Brother printer supports the PictBridge standard, allowing you to connect to and print photos directly from any PictBridge compatible digital camera. Even if your camera is not in PictBridge mode or does not support PictBridge, you can connect your camera as a normal storage device. This enables you to print photos from your camera. Follow the steps for *Printing data from a USB flash memory drive with direct print (HL-3075CW only)* on page 27.

PictBridge requirements

- The machine and the digital camera must be connected using a suitable USB cable.
- The image file must be taken with the digital camera you want to connect to the printer.

Setting your digital camera

Make sure your camera is in PictBridge mode. The following PictBridge settings may be available from the LCD of your PictBridge compatible camera. Depending on your camera some of these setting may not be available.

- Copies
- Qualities
- Paper Size
- Date Print
- File Name Print
- Layout (1 in 1 printing / Index printing only)

You can also set the following PictBridge settings by using the control panel.

Menu	Submenu	Options [1]	
PictBridge	Paper Size [2]	**Letter***/ A4 / B5 / A5 / B6 / A6	See *PictBridge (HL-3075CW only)* on page 91
	Orientation	<For Letter,A4,B5> **Portrait***/Landscape <For A5,B6,A6> Portrait/**Landscape***	
	Date & Time [2]	**Off*** /On	
	File Name [2]	**Off*** / On	
	Print Quality [2]	**Normal*** / Fine	

[1] The default settings are shown in Bold with an asterisk.

[2] These menu selections are also set by your camera. Camera settings are prioritized as long as your camera is not set to use the Printer Settings (Default settings).

Printing images

1. Make sure that your camera is turned off. Connect your camera to the USB direct interface (1) on the front of the printer using a suitable USB cable.

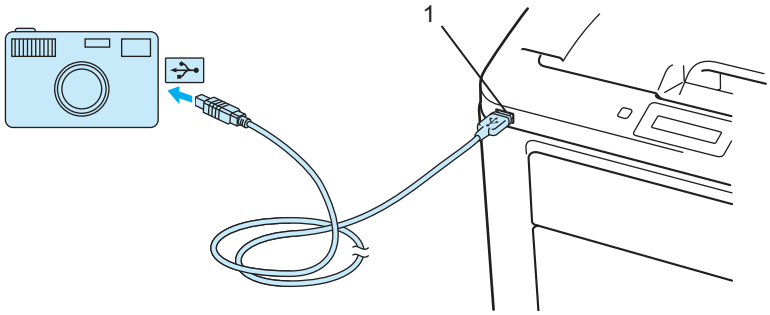

2. Turn on the camera. When the printer has recognized the camera, the LCD shows the following message `Camera Connected`
3. Set your camera to print an image. Set the number of copies if you are asked.
   When the printer starts printing a photo, the LCD will show `Printing`.

IMPORTANT

DO NOT remove the digital camera from the USB direct interface until the printer has finished printing.

Connecting a camera as a storage device

Even if your camera is not in PictBridge mode, or does not support PictBridge, you can connect your camera as a normal storage device. This enables you to print photos from your camera. Follow the steps for *Printing data directly from the USB flash memory drive* on page 29.
(If you would like to print photos in PictBridge mode, see *Setting your digital camera* on page 23.)

Note

The name of the storage mode and operation differs among digital cameras. Please refer to the documentation supplied with your camera for detailed information, such as how to switch from PictBridge mode to mass storage mode.

DPOF printing

DPOF stands for Digital Print Order Format.
Major digital camera manufacturers (Canon Inc., Eastman Kodak Company, Fuji Photo Film Co. Ltd., Panasonic Corporation and Sony Corporation) created this standard to make it easier to print images from a digital camera.
If your digital camera supports DPOF printing, you will be able to choose on the digital camera display the images and number of copies you want to print.
The following DPOF settings are available:

- 1 in 1 printing
- Copies

Printing images with Secure Function Lock 2.0 enabled (HL-3075CW only)

For more information about Secure Function Lock 2.0, see *Chapter 14* of the *Network User's Guide* on the CD-ROM we have supplied.

1. Make sure that your camera is turned off. Connect your camera to the USB direct interface (1) on the front of the printer using a suitable USB cable.

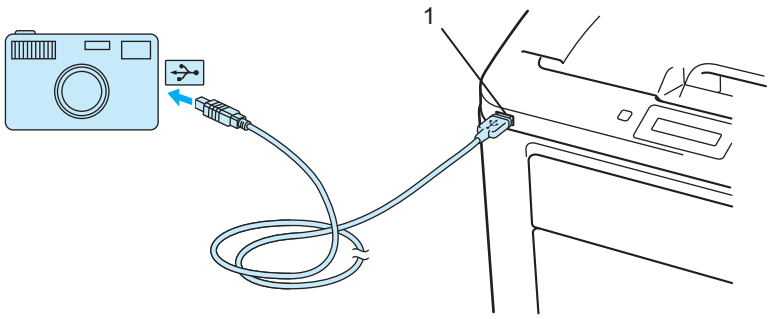

2. Turn on the camera. The following message appears if Secure Function Lock is on. Press **OK**.

   Function Lock

3. Press **+** or **-** to choose ID. Press **OK**

   ID Name 1

4. Enter the password. Press **OK**

   PIN : XXXX

Note

If your ID has the restricted options, the following messages appear on the LCD.

Message	Meaning
`Access Denied`	Printing pictures directly from a camera to the Brother machine is restricted.
`Limit Exceeded`	The number of pages you are allowed to print is exceeded. The print job will be canceled.
`Mono Print Only`	Printing color documents is restricted.
`Not Available`	Printing pictures directly from a camera to the Brother machine is restricted.

5 The following message appears if the password is correct.

`Camera Connected`

6 Set your camera to print an image. Set the number of copies if you are asked.
When the printer starts printing a photo, the LCD will show `Printing`.

IMPORTANT

DO NOT remove the digital camera from the USB direct interface until the printer has finished printing.

Printing data from a USB flash memory drive with direct print (HL-3075CW only)

With the Direct Print feature, you do not need a computer to print data. You can print by just plugging your USB flash memory drive into the printer´s USB direct interface.

There might be some USB flash memory drives that will not work with the printer.

Supported file formats

Direct print supports the following file formats:

- PDF version1.7 [1]
- JPEG
- Exif+JPEG
- PRN (created by HL-3045CN or HL-3075CW printer driver)
- TIFF (scanned by all MFC or DCP Brother models)
- PostScript® 3™(created by the HL-3075CW BRScript3 printer driver)
- XPS version 1.0

[1] Data that includes a JBIG2 image file, JPEG2000 image file, or a transparency files is not supported.

Direct Print default settings

Menu	Sub menu	Options [1]	
Print Menu	Output Color	**Auto***/Color/Mono	See *Print Menu* on page 84
Direct Print	Paper Size	**Letter***/Legal/A4/Executive/JIS B5/B5/A5 /A5 L/JIS B6/B6/A6/A4Long/Folio	See *Direct Print (HL-3075CW only)* on page 90
	Media Type	**Plain Paper***/Thick Paper/Thicker Paper/Thin Paper/Recycled Paper/Bond Paper	
	Multiple Page	**1in1***/2in1/4in1/9in1/16in1/25in1/ 1in2×2pages/1in3×3pages/1in4×4pages/ 1in5×5pages	
	Orientation	**Portrait***/Landscape	
	Collate	**On***/Off	
	Print Quality	**Normal***/Fine	
	PDF Option	**Document***/Document&Stamps/Document&Markup	
	Index Print	**Simple***/Details	

[1] The default settings are shown in Bold with an asterisk.

Creating a PRN or PostScript® 3™ (HL-3075CW only) file for direct printing

1. From the menu bar of an application, click **File**, then **Print**.
2. Choose HL-3075CW (1) and check the **Print to file** box (2). Click **Print**.

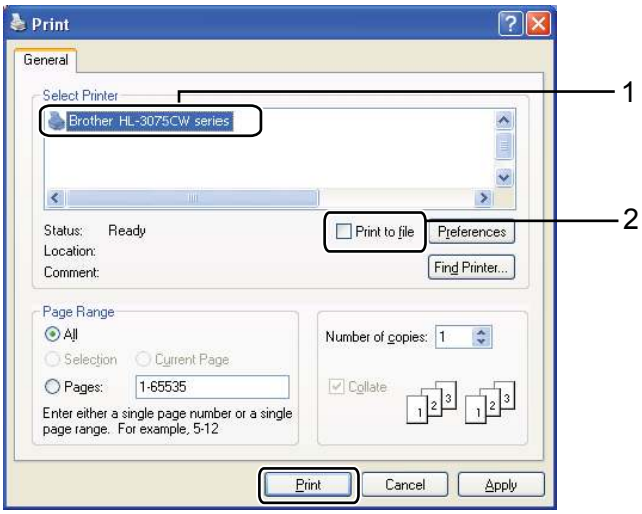

3. Choose the folder you want to save the file to and enter the file name if you are prompted to. If you are prompted for a file name only, you can also specify the folder you want to save the file in by entering the directory name. For example:

   C:\Temp\FileName.prn

   If you have a USB flash memory drive connected to your computer, you can save the file directly to the USB flash memory drive.

Printing data directly from the USB flash memory drive

1. Connect your USB flash memory drive to the USB Direct Interface (1) on the front of the printer. When the printer has recognized the USB flash memory drive, the LCD shows the following message.

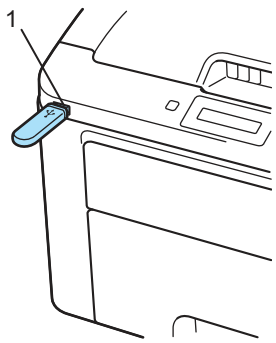

Checking device
↓
1./XXXX.FOLDER1

2. Folder names and file names not in a folder will be shown on the LCD. Press **+** or **-** to choose the folder name or file name and press **OK**.

3. Files: Press **+** or **-** to choose a default printing option and Press **OK** to select it, make the necessary changes to the printing options and press **Go**, then press **+** or **-** to enter the number of copies you want, then press **Go**.
   Folders: Press **+** or **-** to select the file you want to print and press **OK**. Press **+** or **-** to choose a default printing option and press **OK** to select it, make the necessary changes to the printing options and press **Go**, then press **+** or **-** to enter the number of copies you want, then press **Go**.

Printing Default settings

Paper Size → Media Type → Multiple Page → Orientation
↕ ↕
Output Color ← PDF Option ← Print Quality ← Collate

IMPORTANT

DO NOT remove the USB flash memory from the USB direct interface until the printer has finished printing.

Printing data directly from the USB flash memory drive with Secure Function Lock 2.0 enabled (HL-3075CW only)

For more information about Secure Function Lock 2.0, see *Chapter 14* of the *Network User's Guide* on the CD-ROM we have supplied.

1. Connect your USB flash memory drive to the USB Direct Interface (1) on the front of the printer. When the printer has recognized the USB flash memory drive, the LCD shows the following message.

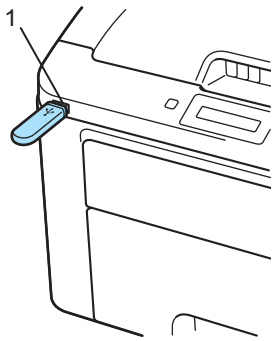

Function Lock

2. Press **+** or **-** to choose ID. Press **OK**

ID Name 1

3. Enter the four-digit password. Press **OK**

PIN : XXXX

Note

If your ID has the restricted options, the following messages appear on the LCD.

Message	Meaning
Access Denied	Printing pictures directly from the USB flash memory drive to the Brother machine is restricted.
Limit Exceeded	The number of pages you are allowed to print is exceeded. The print job will be canceled.
No Permission	Printing color documents is restricted. The print job will be canceled.
Mono Print Only	Printing color documents is restricted.
Not Available	Printing pictures directly from the USB flash memory drive to the Brother machine is restricted.

4. The file names appear if the password is correct.

1./XXXX.FOLDER1

5. Folder names and file names not in a folder will be shown on the LCD. Press **+** or **-** to choose the folder name or file name and press **OK**.

6 Files: Press **+** or **-** to choose a default printing option and Press **OK** to select it, make the necessary changes to the printing options and press **Go**, then press **+** or **-** to enter the number of copies you want, then press **Go**.
Folders: Press **+** or **-** to select the file you want to print and press **OK**. Press **+** or **-** to choose a default printing option and press **OK** to select it, make the necessary changes to the printing options and press **Go**, then press **+** or **-** to enter the number of copies you want, then press **Go**.

Printing Default settings

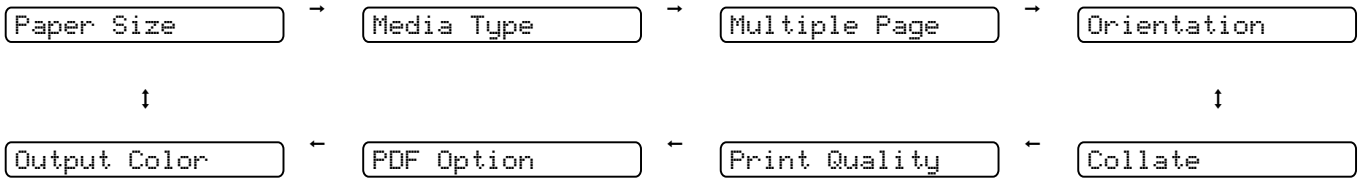

IMPORTANT

DO NOT remove the USB flash memory from the USB direct interface until the printer has finished printing.

2 Driver and Software

Printer driver

A printer driver is software that translates data from the format used by a computer to the format that a particular printer needs. Typically, this format is page description language (PDL).

The printer drivers for the supported versions of Windows® and Macintosh are on the CD-ROM we have supplied or on the Brother Solutions Center at http://solutions.brother.com/. Install the drivers by following the Quick Setup Guide. The latest printer driver can be downloaded from the Brother Solutions Center at http://solutions.brother.com/.

(If you want to uninstall the printer driver, see *Uninstalling the printer driver* on page 69.)

For Windows®

- Windows® printer driver (the most suitable printer driver for this product)
- BR-Script printer driver (PostScript® 3™ language emulation for HL-3075CW only) [1]

[1] Install the driver using the Custom Install from the CD-ROM.

For Macintosh

- Macintosh printer driver (the most suitable printer driver for this product)
- BR-Script printer driver (PostScript® 3™ language emulation for HL-3075CW only) [1]

[1] To install the driver, see *Installing the BR-Script3 printer driver* on page 65.

For Linux® [1] [2]

- LPR printer driver
- CUPS printer driver

[1] Download the printer driver for Linux from http://solutions.brother.com/ or a link on the CD-ROM we have supplied.

[2] Depending on Linux distributions, the driver may not be available.

Note

- For more information about Linux printer driver, visit us at http://solutions.brother.com/.
- The printer driver for Linux may be released after the initial release of this product.

	Windows® printer driver	BR-Script printer driver (HL-3075CW only)	Macintosh Printer Driver	LPR / CUPS printer driver [1]
Windows® XP Home Edition	ⓘ	ⓘ		
Windows® XP Professional	ⓘ	ⓘ		
Windows Vista®	ⓘ	ⓘ		
Windows® 7	ⓘ	ⓘ		
Windows Server® 2003	ⓘ	ⓘ		
Windows Server® 2008	ⓘ	ⓘ		
Windows® XP Professional x64 Edition	ⓘ	ⓘ		
Windows Server® 2003 x64 Edition	ⓘ	ⓘ		
Windows Server® 2008 R2 Edition	ⓘ	ⓘ		
Mac OS X 10.4.11, 10.5.x, 10.6.x		ⓘ	ⓘ	
Linux [1]				ⓘ

[1] For the information on supported Linux distribution and to download the printer driver, visit us at http://solutions.brother.com/.
You can also download the printer driver from a link on the supplied CD-ROM. If you download from a link on CD-ROM, click Install Other Drivers or Utilities, then click For Linux users on the screen menu. Access to internet is required.

You can change the following printer settings when you print from your computer.

- Paper Size
- Orientation
- Copies
- Media Type
- Print Quality
- Color / Mono
- Multiple Page
- Manual Duplex / Booklet (Manual Duplex printing [1])
- Paper Source
- Scaling
- Reverse Print
- Watermark [1 2]
- Header-Footer Print [1 2]
- Toner Save Mode
- Secure Print
- Administrator [1 2]
- User Authentication [1 2 4]
- Color Calibration [1 3]
- Use Reprint [1 3]
- Sleep Time
- Improve Print Output

[1] These settings are not available with the BR-Script printer driver for Windows®.

[2] These settings are not available with the Macintosh printer driver and the BR-Script printer driver for Macintosh.

[3] These settings are not available with the BR-Script printer driver for Macintosh.

[4] This setting is not available for HL-3045CN.

Features in the printer driver (for Windows®)

(For more information, see the **Help** text in the printer driver.)

Note

- The screens in this section are from Windows® XP. The screens on your computer will vary depending on your operating system.
- You can access the **Printing Preferences** dialog box by clicking **Printing Preferences...** in the **General** tab of the **Printer Properties** dialog box.

Basic tab

You can also change Page Layout settings by clicking the illustration on the left side of the **Basic** tab.

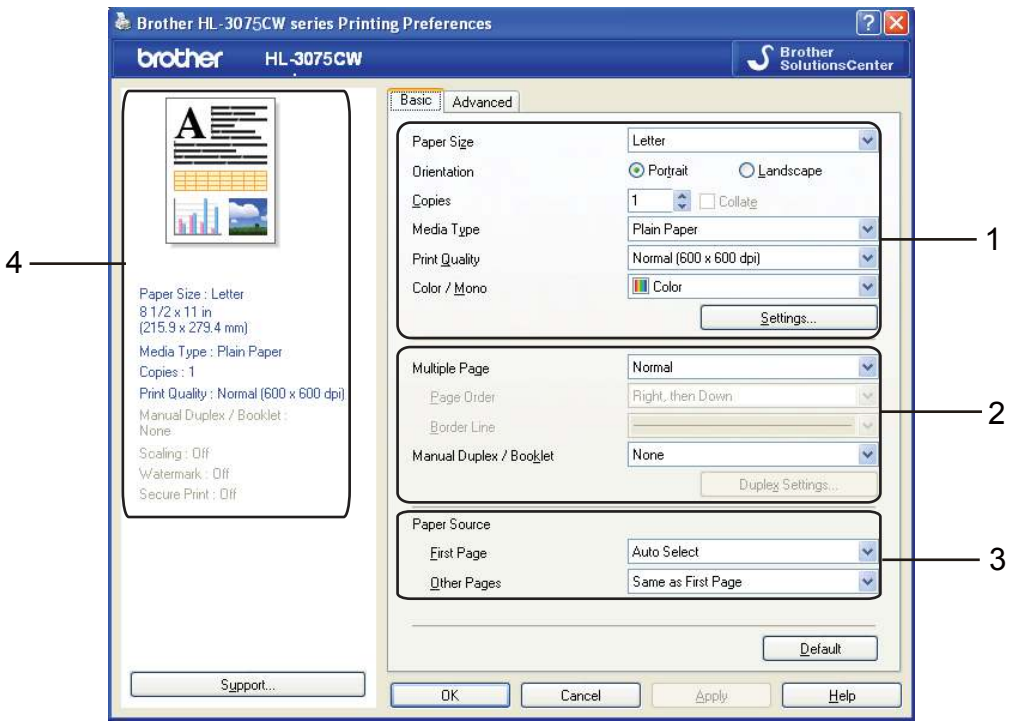

1. Choose the **Paper Size**, **Orientation**, **Copies**, **Media Type**, **Print Quality** and **Color/Mono** (1).
2. Choose the **Multiple Page** and **Manual Duplex/Booklet** (2).
3. Choose the **Paper Source** (3).
4. Click **OK** to apply your chosen settings.
   To return to the default settings, click **Default**, then **OK**.

Note

This area (4) shows the current settings.

Paper Size

From the drop-down list choose the Paper Size you are using.

Orientation

Orientation selects the position of how your document will be printed (**Portrait** or **Landscape**).

Portrait

Landscape

Copies

The copies selection sets the number of copies that will be printed.

■ Collate

With the Collate check box selected, one complete copy of your document will be printed and then repeated for the number of copies you selected. If the Collate check box is not selected, then each page will be printed for all the copies selected before the next page of the document is printed.

Collate checked

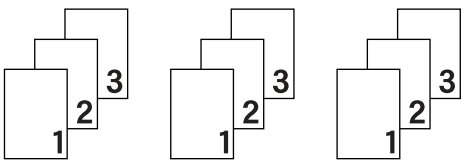

Collate non-checked

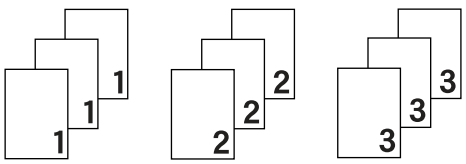

Media Type

You can use the following types of media in your printer. For the best print quality, select the type of media that you wish to use.

Plain Paper	**Thin Paper**	**Thick Paper**	**Thicker Paper**	**Bond Paper**	**Envelopes**
Env. Thick	**Env. Thin**	**Recycled Paper**	**Label**		

Note

- When using ordinary plain paper (60 to 105 g/m^2, 16 to 28 lb) choose **Plain Paper**. When using heavier weight paper or rough paper choose **Thick Paper** or **Thicker Paper**. For bond paper, choose **Bond Paper**.
- When you use envelopes, choose **Envelopes**. If the toner is not fixed to the envelope correctly when **Envelopes** has been selected, choose **Env. Thick**. If the envelope is crumpled when **Envelopes** has been selected, choose **Env.Thin**.

Print Quality

You can choose the following print quality settings.

- Normal

  600×600 dpi. Recommended for ordinary printing. Good print quality with reasonable print speeds.

- Fine

  2400 dpi class. The finest print mode. Use this mode to print precise images such as photographs. Since the print data is much larger than in normal mode, processing time / data transfer time and printing time will be longer.

Note

- The print speed will change depending on what print quality setting you choose. Higher print quality takes longer to print, while lower print quality takes less time to print.
- (HL-3045CN only) If you choose **Fine**, the LCD may show `Out of Memory` because the printer's memory is full. If you still get the same error message after you try printing several times, add more memory. (See *Installing extra memory* on page 99.)

Color/Mono

You can change the Color/Mono settings as follows:

- Color

  When your document contains color and you want to print it in color, select this mode.

- Mono

  Select this mode if your document has only black and grayscale text and/or objects. If your document contains color, selecting Mono mode prints your document in 256 levels of gray.

- Auto

  The printer checks the content of your documents for color. If color is detected, it prints in color. If no color content is detected, it prints in monochrome. The total printing speed may become slower.

Note

If the Cyan, Magenta or Yellow toner reaches the end of its life, choosing **Mono** will allow you to keep printing as long as the Black toner does not reach the end of its life.

Settings Dialog

You can change the following setting by clicking **Settings** from the **Basic** tab.

■ Color Mode

The following options are available in color Matching mode:

- Normal

  This is the default color mode.

- Vivid

  The color of all elements are adjusted to become a more vivid color.

- Auto

  The printer driver automatically selects the **Color Mode** type.

- None

■ Import

You can adjust the print configuration of a particular image by clicking **settings**. When you have finished adjusting the image parameters, such as brightness and contrast, you can import those settings as a print configuration file. Use the **Export** function to create a print configuration file from the current settings.

■ Export

You can adjust the print configuration of a particular image by clicking **settings**. When you have finished adjusting the image parameters, such as brightness and contrast, you can export those settings as a print configuration file. Use the **Import** function to load a previously exported configuration file.

■ Improve Gray Color

You can improve the image quality of a shaded area.

■ Enhance Black Printing

If a black graphic cannot be printed correctly, choose this setting.

■ Improve Thin Line

You can improve the image quality of thin lines.

■ Improve Pattern Printing

Select this option if printed fills and patterns are different from the patterns and fills you see on your computer.

Multiple Page

The Multiple Page selection can reduce the image size of a page allowing multiple pages to be printed on one sheet of paper or enlarging the image size for printing one page on multiple sheets of paper.

■ Page Order

When N in 1 option is selected, the page order can be selected from the drop-down list.

■ Border Line

When printing multiple pages on one sheet with the Multiple Page feature you can choose to have a solid border, dash border or no border around each page on the sheet.

Manual Duplex / Booklet

When you want to print a booklet or do manual duplex printing, use this function.

- None

  Disable duplex printing.

- Manual Duplex

  In this mode, the printer prints all the even numbered pages first. Then the printer driver will stop and show the instructions required to re-install the paper. When you click **OK** the odd numbered pages will be printed (See *Manual duplex printing* on page 19).

  If you choose **Manual Duplex** and click **Duplex Setting**, you can change the following settings.

  - Duplex Type

    There are six types of duplex binding directions available for each orientation.

  - Binding Offset

    If you check the Binding Offset option, you can also specify the offset for binding in inches or millimeters.

- Booklet

  When you want to print a booklet, use this function. To make the Booklet, fold the printed pages down the middle.

  If you choose **Booklet** and click **Duplex Settings**, you can change the following settings.

  - Duplex Type

    There are two types of duplex binding directions available for each orientation.

  - Binding Offset

    If you check the Binding Offset option, you can also specify the offset for binding in inches or millimeters.

Paper Source

You can choose **Auto Select**, **Tray1** or **Manual** and specify separate trays for printing the first page and for printing from the second page onwards.

Note

The printer automatically turns on the Manual Feed mode when you put paper in the manual feed slot even if another setting is selected.

Advanced tab

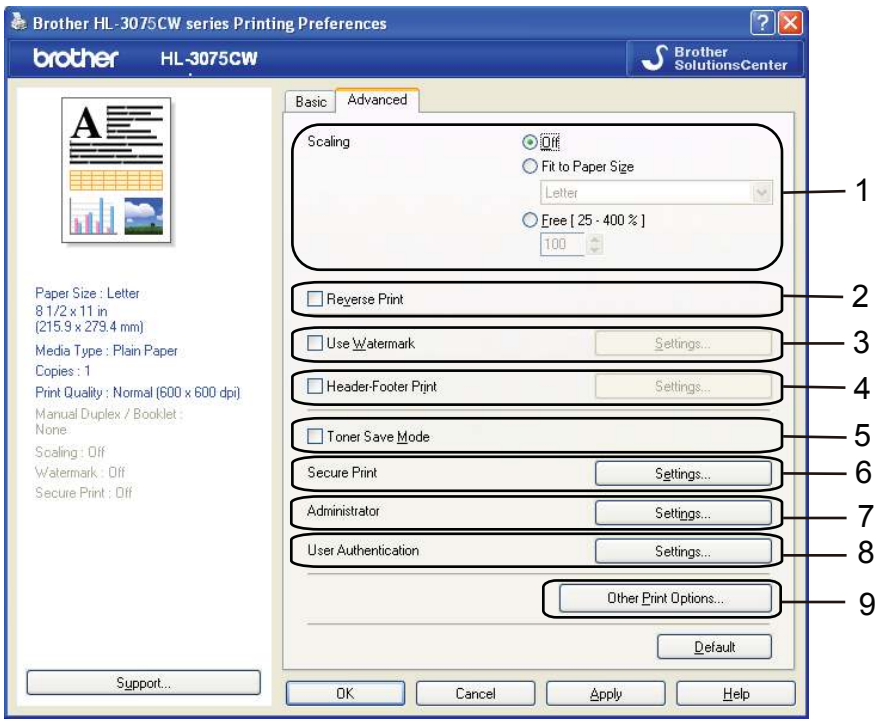

Change the tab settings by clicking one of the following icons:

- Scaling (1)
- Reverse Print (2)
- Use Watermark (3)
- Header-Footer Print (4)
- Toner Save Mode (5)
- Secure Print (6)
- Administrator (7)
- User Authentication (8) (HL-3075CW only)
- Other Print Options (9)

Scaling

You can change the print image scaling.

Reverse Print

Check **Reverse Print** to rotate the data by 180 degrees.

Use Watermark

You can put a logo or text into your documents as a watermark.

You can choose one of the preset watermarks, or you can use a bitmap file or text that you have created.

When you use a bitmap file as a watermark, you can change the size of the watermark and put it anywhere you like on the page.

When you use text as a watermark, you can change the font, color and angle settings.

Header-Footer Print

When this feature is enabled, it will print the date and time on your document from your computer's system clock and the PC login user name or the text you entered. By clicking **Settings**, you can customize the information.

- ID Print

  If you select **Login User Name**, your PC login user name will print. If you select **Custom** and enter the text in the **Custom** edit box, the text you entered will print.

Toner Save Mode

You can conserve toner use with this feature. When you set **Toner Save Mode** to **On**, print appears lighter. The default setting is **Off**.

Note

We do not recommend **Toner Save Mode** for printing photo or gray scale images.

Secure Print

Secure documents are documents that are password protected when they are sent to the machine. Only the people who know the password will be able to print them. Since the documents are secured at the machine, you must enter the password using the control panel of the machine to print them.

If you want to create a secure print job, click **Settings** and then check the **Secure Print** check box. Enter a password in the **Password** box and click **OK**. (For more information about the secure print function, see *Printing Secure data* on page 79.)

Note

Check the **Secure Print** check box if you want to prevent other people from printing your data.

Administrator

Administrators have the authority to limit access to functions such as scaling and watermark.

- Copies Lock

  Lock the copy pages selection to prevent multiple copy printing.
- Multiple Page & Scaling Lock

  Lock the scaling setting and multiple page setting.
- Color/Mono Lock

  Lock the Color/Mono settings as Mono to prevent color printing.
- Watermark Lock

  Lock the current settings of the Watermark option to prevent changes being made.
- Header-Footer Print Lock

  Lock the current settings of the Header-Footer Print option to prevent changes being made.
- Set Password

  Click here to change the password.

User Authentication (HL-3075CW only)

If you are restricted from PC Print by Secure Function Lock feature, you need to set your ID and PIN in the **User Authentication** dialog. Click **Settings** of the **User Authentication** and enter your ID and PIN. If your PC login name is registered to Secure Function Lock, you can check the **Use PC Login Name** box instead of entering your ID and PIN.

For more information about Secure Function Lock 2.0, see *Chapter 14* of the *Network User's Guide* on the CD-ROM we have supplied.

Note

- If you want to see the information of your ID such as the status of restricted feature and the number of remaining pages you are allowed to print, click the **Verify**. **Authentication result** dialog will appear.
- If you want to make the **Authentication result** dialog appear each time you print, check the **Show print status before printing**.
- If you want to enter your ID and PIN each time you print, check the **Enter ID Name/PIN for each print job**.

Other Print Options

You can set the following in Printer Function:

- Color Calibration
- Use Reprint
- Sleep Time
- Improve Print Output

Color Calibration

The output density of each color may vary depending on the temperature and humidity of the environment the printer is in. This setting helps you to improve color density by letting the printer driver use the color calibration data stored in your printer.

- Use Calibration Data

  If the printer driver successfully gets the calibration data, the printer driver will automatically check this box. Remove the check mark if you do not want to use the data.

- Start Color Calibration

  If you click this button, your printer will start color calibration and then the printer driver will attempt to get the calibration data from your printer.

Note

If you print by using the Direct Print feature, PictBridge feature or BR-Script printer driver, you need to perform the calibration from the control panel. See *Calibration* on page 95.

Use Reprint

The printer keeps the print job sent to it in memory.
You can reprint the last job without sending the data again from your computer.For more information about the Reprint function, see *Reprinting documents* on page 78.

Note

If you want to prevent other people from printing your data using the reprint function, uncheck the **Use Reprint** check box.

Sleep Time

When the printer does not receive data for a certain period of time, it enters sleep mode. In sleep mode, the printer acts as though it were turned off. When you choose **Printer Default**, the timeout setting has been set to a specific time set at the factory, this can be altered in the driver or at the printer. Intelligent Sleep Mode automatically adjusts to the most suitable timeout setting depending on the frequency of your printer use.

While the printer is in sleep mode, Back light is off, the LCD shows `Sleep`, but the printer can still receive data. Receiving a print file or document or pressing **Go** will automatically wake up the printer to start printing.

Improve Print Output

This feature allows you to improve a print quality problem.

- Reduce Paper Curl

  If you choose this setting, the paper curl may be reduced.

  If you are printing only a few pages, you do not need to choose this setting. We recommend that you change the printer driver setting in **Media Type** to a thin setting.

Note

This operation makes the temperature of the printer's fusing process lower.

- Improve Toner Fixing

  If you choose this setting, the toner fixing on paper may be improved. If this selection does not provide enough improvement, select **Thicker paper** in **Media type** settings.

Note

This operation makes the temperature of the printer's fusing process higher.

Tray Settings tab

Note

From the **Start** menu, select Control Panel and then **Printers and Faxes**. Right-click the **Brother HL-3075CW (HL-3045CN) series** icon and select Properties to access the **Tray Settings** tab.

You can define the paper size for each paper tray and auto detect the serial number in the **Tray Settings** tab as follows.

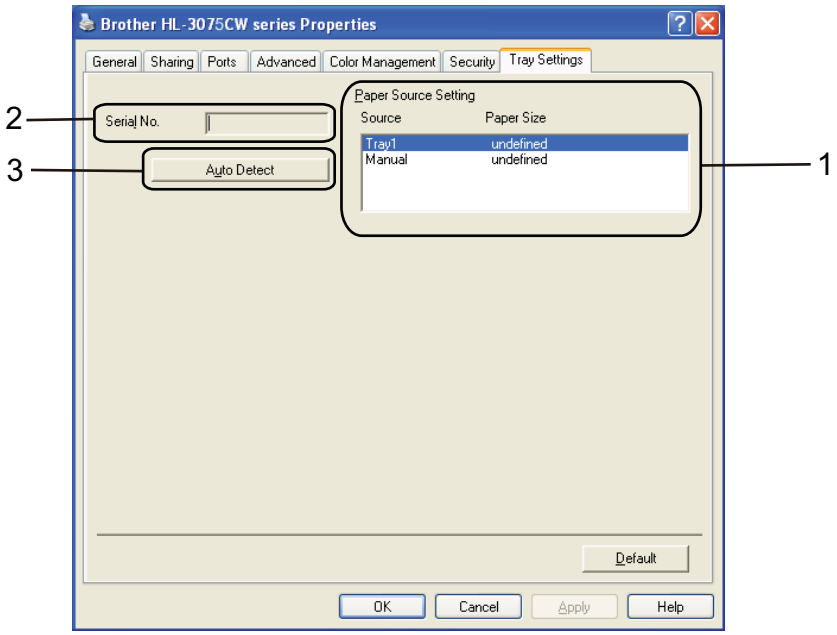

■ **Paper Source Setting** (1)

This feature recognizes the paper size set from the control panel menu for each paper tray by clicking **Auto Detect** (3).

■ **Serial No.** (2)

By clicking **Auto Detect** (3), the printer driver will probe the printer and display its serial number. If it fails to receive the information, the screen will display "---------".

Note

The **Auto Detect** (3) function is not available under the following printer conditions:

- The printer power switch is off.
- The printer is in an error state.
- The printer is in a network shared environment.
- The cable is not connected to the printer correctly.

Support

Note

You can access the **Support** dialog box by clicking **Support** in the **Printing Preferences** dialog box.

- **Brother Solutions Center** (1)

  The Brother Solutions Center (http://solutions.brother.com/) is a web site offering information about your Brother product including FAQs (Frequently Asked Questions), User's Guides, driver updates and tips for using your printer.

- **Genuine Supplies website** (2)

  You can visit our website for genuine Brother supplies by clicking this button.

- **Print Settings** (3)

  This will print the pages that show how the internal settings of the printer have been configured.

- **Check Setting** (4)

  You can check the current driver settings.

- **About** (5)

  This will show the list of the printer driver files and version information.

Using the custom monochrome printer driver (for Windows®)

You can install a Windows® printer driver that will restrict printing to monochrome only.

If you want to install the Windows® printer driver that will restrict color printing, choose **Custom setup** from **Install Printer Driver** selection on the menu screen of the supplied CD-ROM. After accepting the software license and the initial installation screens, follow the steps below when the Select Components screen appears.

1. Choose **PCL Driver** and any other Components you wish to install and click the **Settings** button.

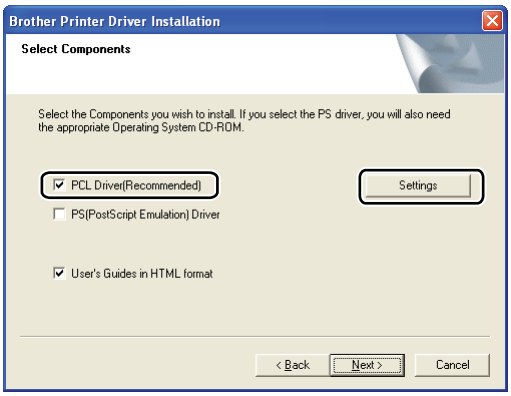

Note

If you are using the HL-3045CN, the PCL driver will automatically be selected.

2. Check the **Enable** box for **Restrict Color Printing** and enter a password in the **Password** box and **Confirm Password** box. Then click **OK**.

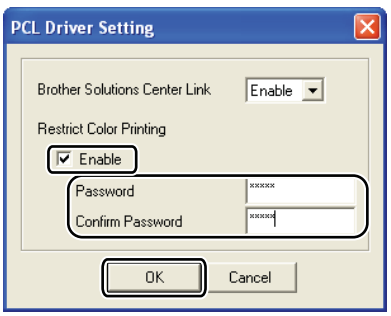

Note

- The password must be between 5 and 25 characters.
- You can unlock the restrict color printing setting by using the **Color/Mono Lock** feature of the printer driver. (See *Administrator* on page 42.) To unlock the driver for color printing, you will need the password you set at step ❷.

Using the BR-Script3 printer driver (PostScript® 3™ language emulation for Windows®) (HL-3075CW only)

(For more information, see the **Help** text in the printer driver.)

Note

- To use the BR-Script3 printer driver you must install the driver using the Custom Install from the CD-ROM.
- The screens in this section are from Windows® XP. The screens on your computer may vary depending on your operating system.

Printing Preferences

Note

You can access the **Printing Preferences** dialog box by clicking **Printing Preferences...** in the **General** tab of the **Brother HL-3075CW BR-Script3 Properties** dialog box.

■ Layout tab

You can change the layout setting by choosing the settings for **Orientation**, **Page Order** and **Page Per Sheet**.

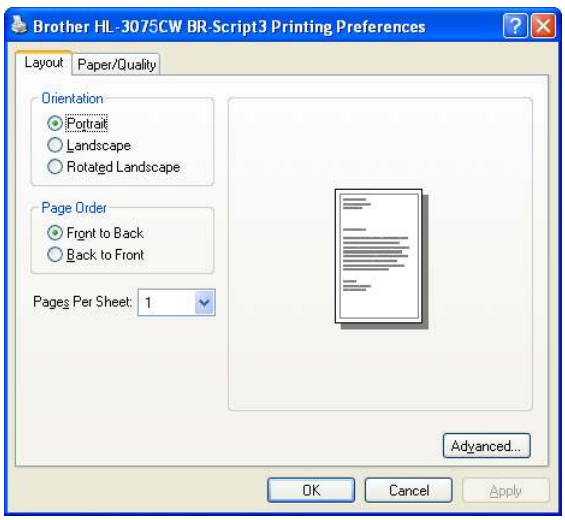

- **Orientation**

  Orientation selects the position of how your document will be printed. (**Portrait**, **Landscape** or **Rotated Landscape**)

- **Page Order**

  Specifies the order in which the pages of your document will be printed. **Front to Back** prints the document so that page 1 is on top of the stack. **Back to Front** prints the document so that page 1 is on the bottom of the stack.

- **Page Per Sheet**

  The Page Per Sheet selection can reduce the image size of a page allowing multiple pages to be printed on one sheet of paper or enlarging the image size for printing one page on multiple sheets of paper.

■ Paper/Quality tab

Choose the **Paper Source** and **Color**.

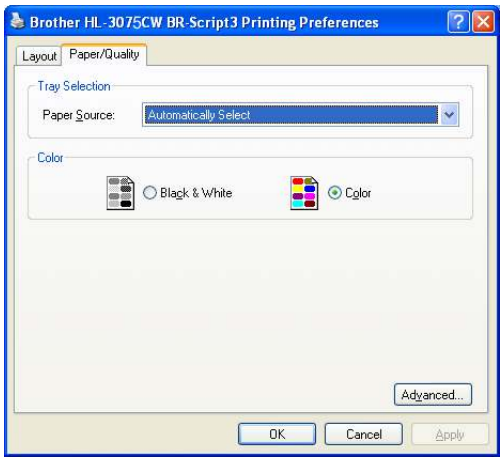

- **Paper Source**

  You can choose **Automatically Select**, **Tray1** or **Manual Feed**.

- **Color**

  Choose how to print color graphics either **Black and White** or **Color**.

Advanced options

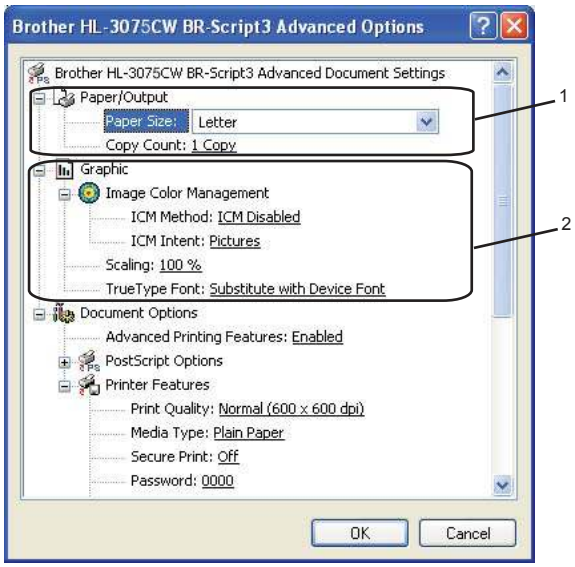

1. Choose the **Paper Size** and **Copy Count** (1).

   ■ **Paper Size**

   From the drop-down box choose the Paper Size you are using.

   ■ **Copy Count**

   The copy selection sets the number of copies that will be printed.

2. Set the **Image Color Management**, **Scaling** and **TrueType Font** settings (2).

   ■ **Image Color Management**

   Specifies how to print your color graphics.

   - If you don't want to enable **Image Color Management**, click **ICM Disabled**.
   - If you want the calculations for color matching to be performed on the host computer before it sends the document to the printer, click **ICM Handled by Host System**.
   - If you want the calculations for color matching to be performed on your printer, click **ICM Handled by Printer using printer calibration**.

   ■ **Scaling**

   Specifies whether to reduce or enlarge documents, and by what percentage.

   ■ **TrueType Font**

   Specifies the TrueType font options. Click **Substitute with Device Font** (the default) to use equivalent printer fonts for printing documents that contain TrueType fonts. This will permit faster printing; however, you might lose special characters not supported by the printer font. Click **Download as Softfont** to download TrueType fonts for printing instead of using printer fonts.

3 You can change settings by choosing a setting in the **Printer Features** list (3):

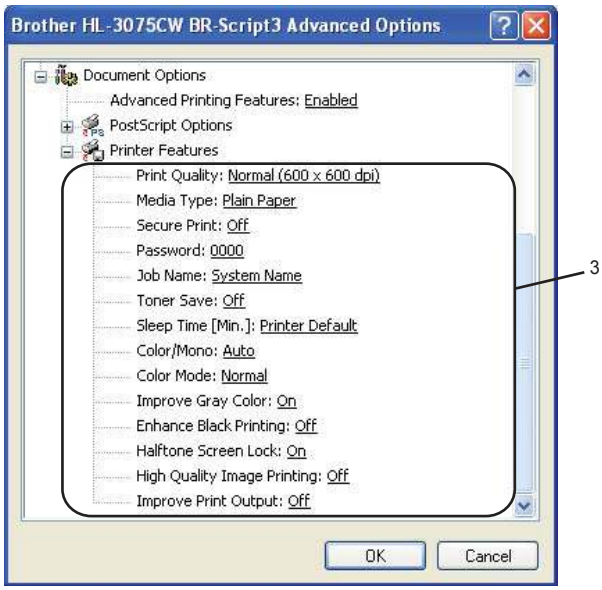

■ Print Quality

You can choose the following print quality settings.

- Normal

  600×600 dpi. Recommended for ordinary printing. Good print quality with reasonable print speeds.

- Fine

  2400 dpi class. The finest print mode. Use this mode to print precise images such as photographs. Since the print data is much larger than in normal mode, processing time / data transfer time and printing time will be longer.

Note

- The print speed will change depending on what print quality setting you choose. Higher print quality takes longer to print, while lower print quality takes less time to print.
- (HL-3045CN only) If you choose **Fine**, the LCD may show `Out of Memory` because the printer's memory is full. If you still get the same error message after you try printing several times, add more memory. (See *Installing extra memory* on page 99.)

■ **Media Type**

You can use the following types of media in your printer. For the best print quality, select the type of media that you wish to use.

Plain Paper	**Thin Paper**	**Thick Paper**	**Thicker Paper**	**Bond Paper**	**Envelopes**
Env. Thick	**Env. Thin**	**Recycled Paper**	**Label**		

■ **Secure Print**

Secure Print allows you to secure documents that are password protected when they are sent to the printer. Only the people who know the password will be able to print them. Since the documents are secured at the printer, you must enter the password using the control panel of the printer. The secured document must have a **Password** and **Job Name**.

(For more information about the secure print function, see *Printing Secure data* on page 79.)

■ **Password**

Choose the password for your secured document that you send to the machine from the drop-down box.

■ **Job Name**

Choose the Job name from the drop-down list for your secured document.

■ **Toner Save**

You can conserve toner use with this feature. When you set **Toner Save Mode** to **On**, print appears lighter. The default setting is **Off**.

Note

We do not recommend **Toner Save** for printing Photo or Gray Scale images.

■ **Sleep Time**

When the printer does not receive data for a certain period of time, it enters sleep mode. In sleep mode, the printer acts as though it were turned off. When you choose **Printer Default** the timeout setting has been set to a specific time set at the factory, this can be altered in the driver or at the printer. While the printer is in sleep mode, the LCD shows `Sleep`, but the printer can still receive data. Receiving a print file or document or pressing **Go** will automatically wake up the printer to start printing.

■ **Color/Mono**

You can choose the following color mode:

- Color

  The device will print all pages in full color mode.

- Mono

  Selecting Mono mode prints your documents in grayscale.

- Auto

  The printer checks the content of your documents for color. If color is detected, it prints in color. If no color content is detected, it prints in monochrome. The total printing speed may become slower.

Note

If the Cyan, Magenta or Yellow toner reaches the end of its life, choosing **Mono** will allow you to keep printing as long as the Black toner does not reach the end of its life.

■ **Color Mode**

The following options are available in Color Matching mode:

- Normal

  This is the Default color mode.

- Vivid

  The color of all elements are adjusted to become a more vivid color.

- None

■ **Improve Gray Color**

You can improve the image of a shaded area.

■ **Enhance Black Printing**

If a black graphic cannot print correctly, choose this setting.

■ **Halftone Screen Lock**

Stops other applications from modifying the Halftone settings. The default setting is **On**.

■ **High Quality Image Printing**

You can get high quality image printing. If you set **High Quality Image Printing** to **On**, the printing speed will be slower.

■ **Improve Print Output**

This feature allows you to improve a print quality problem.

- **Reduce Paper Curl**

  If you choose this setting, the paper curl may be reduced.If you are printing only a few pages, you do not need to choose this setting. We recommend that you change the printer driver setting in **Media Type** to a thin setting.

Note

This operation make the temperature of the printer's fusing process lower.

- **Improve Toner Fixing**

  If you choose this setting, the toner fixing on paper may be improved. If this selection does not provide enough improvement, select **Thicker paper** in **Media type** settings.

Note

This operation make the temperature of the printer's fusing process upper.

Ports tab

Choose the port where your printer is connected or the path to the network printer you are using.

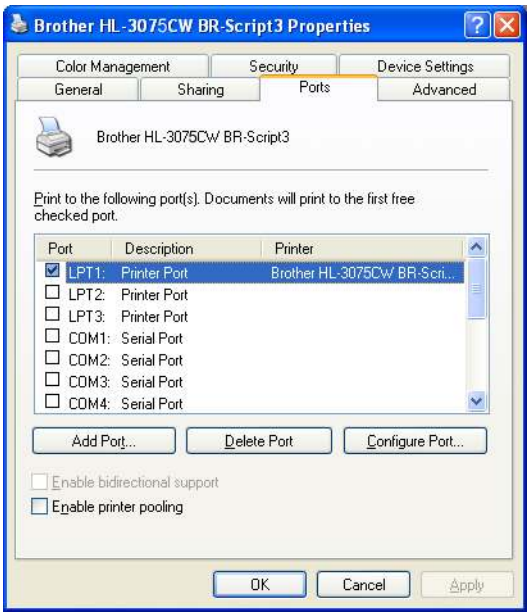

Features in the printer driver (for Macintosh)

This printer supports Mac OS X 10.4.11, 10.5.x, 10.6.x

Note

The screens in this section are basically from Mac OS X 10.5.x. The screens on your Macintosh will vary depending on your operating system.

Choosing page setup options

1. From an application such as Apple TextEdit, click **File**, then **Page Setup**. Make sure HL-XXXX (where XXXX is your model name) is chosen in the **Format for** pop-up menu. You can change the settings for **Paper Size**, **Orientation** and **Scale**, then click OK.

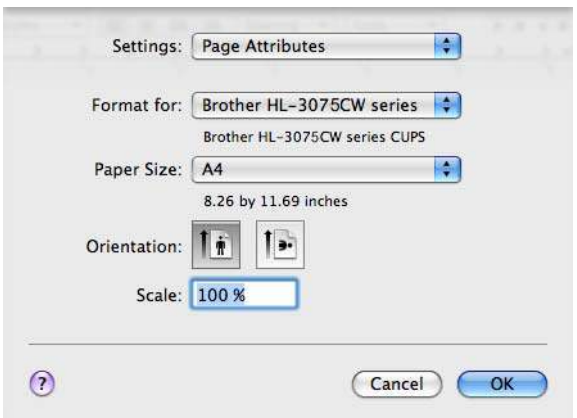

2. From an application such as Apple TextEdit, click **File**, then **Print** to start printing.

■ For Mac OS X 10.4.x

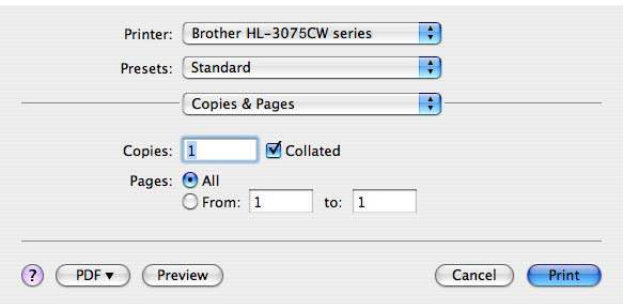

■ For Mac OS X 10.5.x and 10.6.x

For more page setup options, click the disclosure triangle beside the Printer pop-up menu.

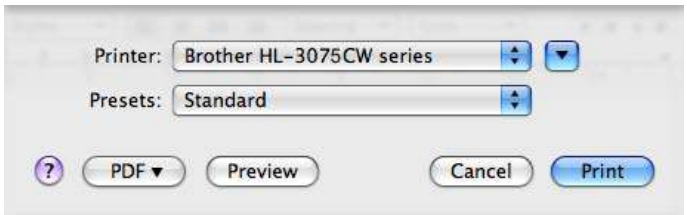

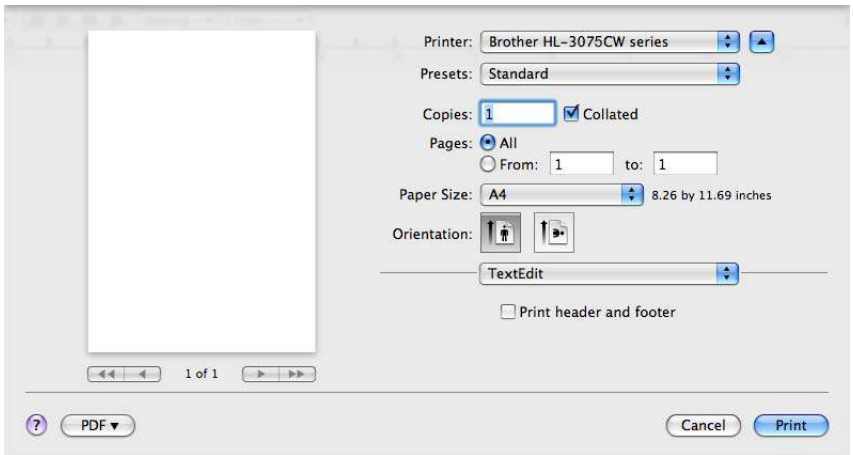

Choosing printing options

To control special printing features, choose the options in the Print dialog box.

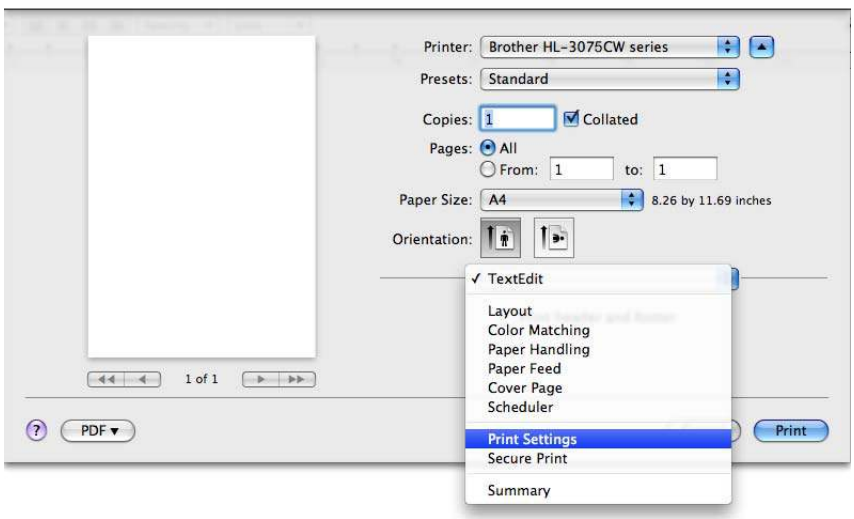

Cover Page

You can make the following cover page settings:

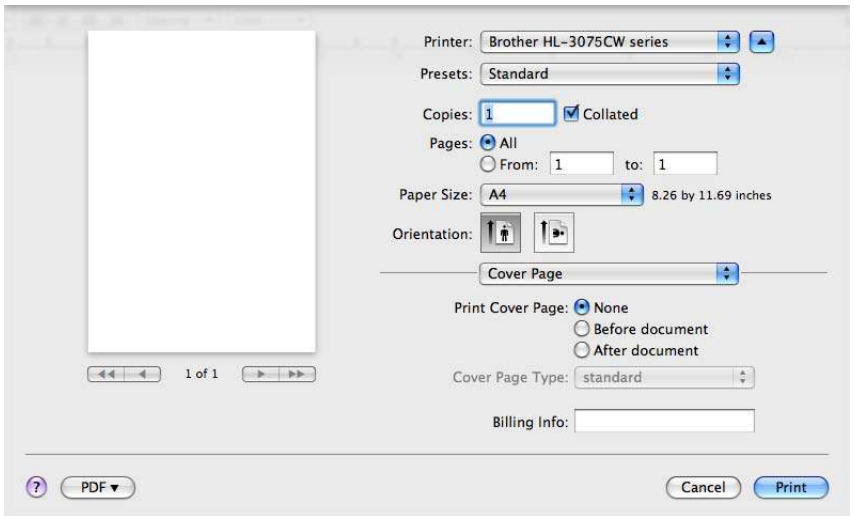

■ **Print Cover Page**

If you want to add a cover page to your document, use this function.

■ **Cover Page Type**

Choose a template for the cover page.

■ **Billing Info**

If you want to add the billing information to the cover page, enter text in the **Billing Info** box.

Layout

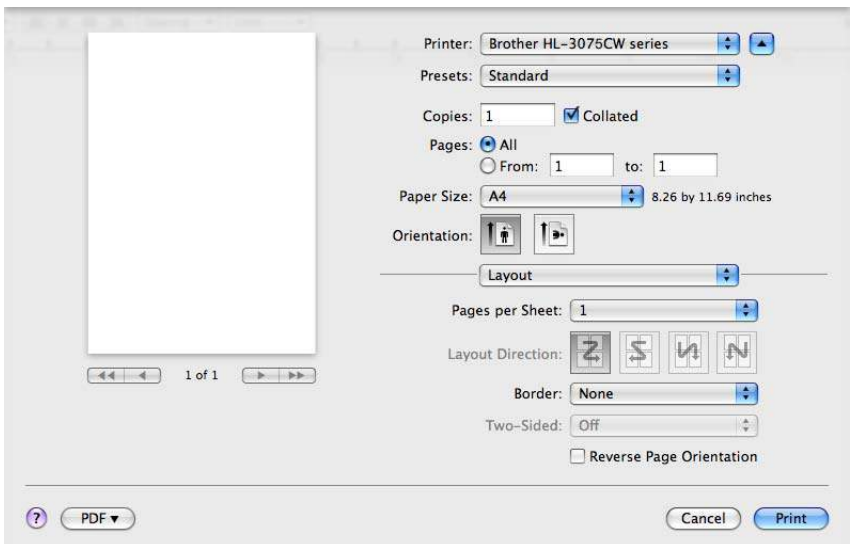

■ **Pages per Sheet**

Choose how many pages will appear on each side of the paper.

- **Layout Direction**

  When you specify the pages per sheet, you can also specify the direction of the layout.

- **Border**

  If you want to add a border, use this function.

- **Reverse Page Orientation** (Mac OS X 10.5.x and 10.6.x only)

  Check **Reverse Page Orientation** to reverse the data from up to down.

- **Flip horizontally** (Mac OS X 10.6.x only)

  Check **Flip horizontally** to print as a reflection flipped left-to-right.

Secure Print

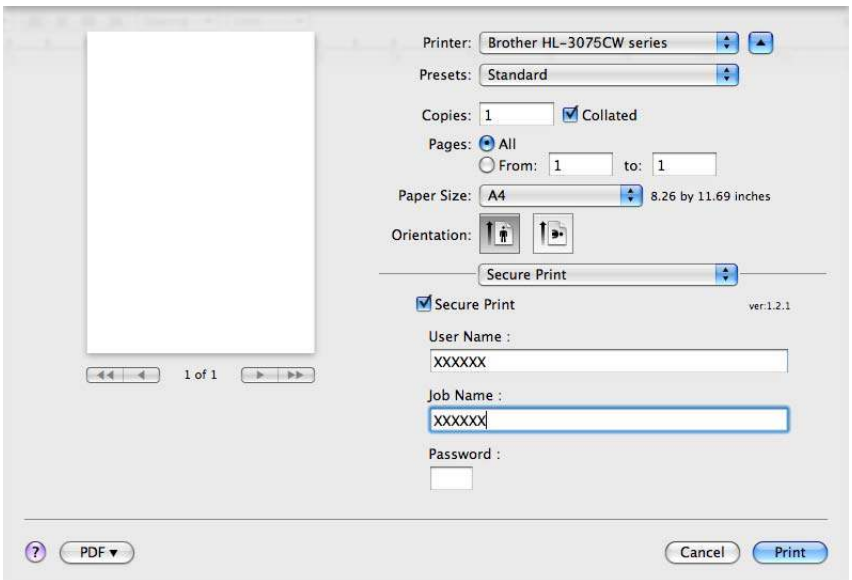

Secure Print: Secure documents are documents that are password protected when they are sent to the printer. Only the people who know the password will be able to print them. Since the documents are secured at the printer, you must enter the password using the control panel of the machine to print them.

If you want to create a secure print job, check the **Secure Print** box. Enter a user name, job name and password, then click **Print**. (For more information about the secure print function, see *Printing Secure data* on page 79.)

Note

Check the **Secure Print** check box if you want to prevent other people from printing your data.

Print Settings

You can change settings by choosing a setting in the **Print Settings** list:

Basic tab

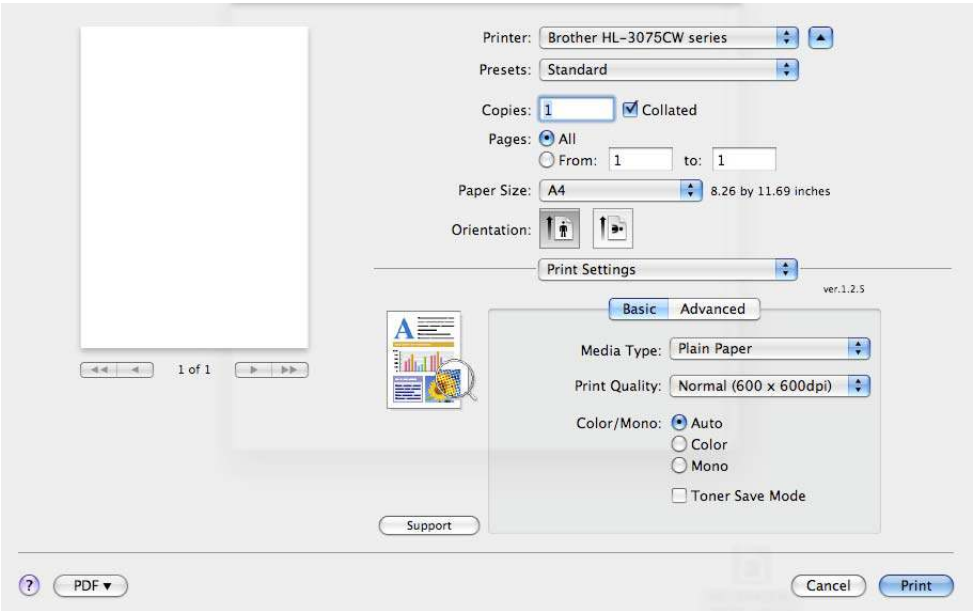

■ Media Type

You can change the media type to one of the following:

- Plain Paper
- Thin Paper
- Thick Paper
- Thicker Paper
- Bond Paper
- Recycled Paper
- Envelopes
- Env. Thick
- Env. Thin
- Label

Print Quality

You can choose the following print quality settings.

- Normal

  600 dpi class. Recommended for ordinary printing. Good print quality with good print speeds.

- Fine

  2400 dpi class. The finest print mode. Use this mode to print precise images such as photographs. Since the print data is much larger than in normal mode, processing time, data transfer time and printing time will be longer.

Note

- The print speed will change depending on what print quality setting you choose. Higher print quality takes longer to print, while lower print quality takes less time to print.
- (HL-3045CN only) If you choose **Fine**, the LCD may show `Out of Memory` because the printer's memory is full. If you still get the same error message after you try printing several times, add more memory. (See *Installing extra memory* on page 99.)

Color/Mono

You can change the Color/Mono settings as follows:

- Color

  When your document contains color and you want to print it in color, select this mode.

- Mono

  Select this mode if your document has only black and grayscale text and/or objects. Mono mode makes the print processing speed faster than color mode. If your document contains color, selecting Mono mode prints your document in 256 levels of gray.

- Auto

  The printer checks the content of your documents for color. If color is detected, it prints in color. If no color content is detected, it prints in monochrome. The total printing speed may become slower.

Note

If the Cyan, Magenta or Yellow toner reaches the end of its life, choosing **Mono** will allow you to keep printing as long as the Black toner does not reach the end of its life.

Toner Save Mode

You can conserve toner use with this feature. When you set **Toner Save Mode** to On, print appears lighter. The default setting is **Off**.

Note

We do not recommend Toner Save for printing Photo or Gray Scale images.

Reverse Printing (Mac OS X 10.4.x only)

Check **Reverse Print** to rotate the data by 180 degrees.

Advanced tab

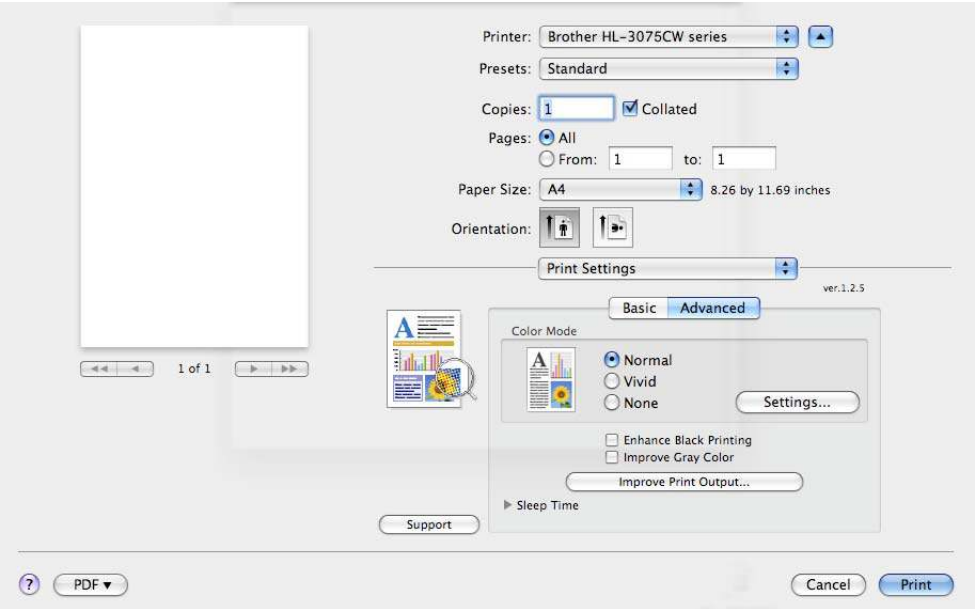

■ **Color Mode**

You can change the color mode as follows:

- Normal

  This is the Default color mode.
- Vivid

  The color of all elements are adjusted to become a more vivid color.
- None

■ **Enhance Black Printing**

If a black graphic cannot be printed correctly, choose this setting.

■ **Improve Gray Color**

You can improve the image quality of shaded areas by ticking the **Improve Gray Color** check box.

Improve Print Output

This feature allows you to improve a print quality problem.

- Reduce Paper Curl

  If you choose this setting, the paper curl may be reduced.

  If you are printing only a few pages, you do not need to choose this setting. We recommend that you change the printer driver setting in **Media Type** to a thin setting.

Note

This operation make the temperature of the printer's fusing process lower.

- Improve Toner Fixing

  If you choose this setting, the toner fixing on paper may be improved. If this selection does not provide enough improvement, select **Thicker paper** in **Media type** settings.

Note

This operation make the temperature of the printer's fusing process upper.

Sleep Time

When the printer does not receive data for a certain period of time, it enters sleep mode. In sleep mode, the printer acts as though it were turned off. When you choose **Printer Default** the timeout setting has been set to a specific time set at the factory, this can be altered in the driver or at the printer. If you want to change the sleep time, choose **Manual** and then enter the time in the text box on the driver.

While the printer is in sleep mode, the LCD shows `Sleep`, but the printer can still receive data. Receiving a print file or document or pressing **Go** will automatically wake up the printer to start printing

Manual Duplex Printing

Select **Paper Handling**.

- For Mac OS X 10.4.x

  Choose **Odd numbered pages**. Turn the paper over and reload it in the tray, and then choose **Even numbered pages** and print.

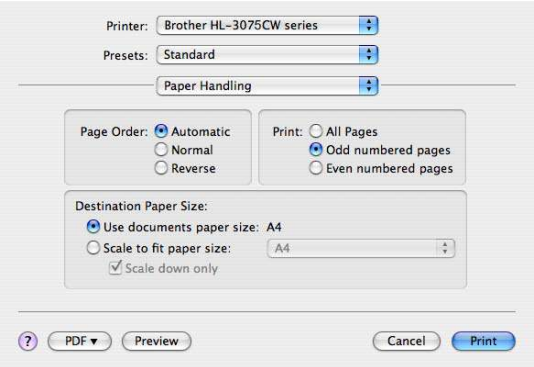

- For Mac OS X 10.5.x and 10.6.x

  Choose **Odd only** and print. Turn the paper over and reload it in the tray, and then choose **Even only** and print.

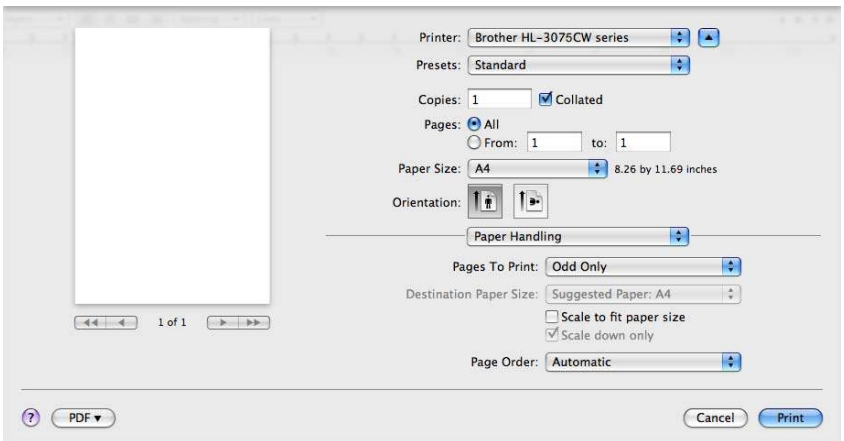

Status Monitor

This reports the printer status (any errors that may happen with the printer) when printing. If you would like to turn the status monitor on, follow these steps:

- For Mac OS X 10.4.11

  1. Run the **Printer Setup Utility** (from the **Go** menu, choose **Applications**, **Utilities**), then choose the printer.
  2. Click the **Utility**, then the status monitor will start up.

- For Mac OS X 10.5.x

  1. Run the **System Preferences**, select **Print & Fax**, then choose the printer.
  2. Click the **Open Print Queue...**, then click the **Utility**. The status monitor will start up.

- For Mac OS X 10.6.x

  1. Run the **System Preferences**, select **Print & Fax**, then choose the printer.
  2. Click the **Open Print Queue...**, then click **Printer Setup**. Select the **Utility** tab then click **Open Printer Utility**. Status Monitor will start up.

Using the BR-Script3 printer driver (Post Script® 3™ language emulation for Macintosh) (HL-3075CW only)

Note

- To use the BR-Script3 printer driver on a Network, see *the Network User's Guide on the CD-ROM*.
- To use the BR-Script3 printer driver, you need to set the `Emulation` to `BR-Script3` by using the control panel before connecting the interface cable. (See *Print Menu* on page 84.)

Installing the BR-Script3 printer driver

You need to install the BR-Script3 printer driver using the following instructions.

■ For Mac OS X 10.4.x

1. Turn on your Macintosh.
2. From the **Go** menu choose **Applications**.

3. Open the **Utilities** folder.

4 Double-click the **Printer Setup Utility** icon.

5 Click **Add**.

6 Choose the printer name and make sure that **Brother** is shown in **Printer Model** (**Print Using**). Select the printer name that shows **BR-Script** in the **Model Name** (**Model**), and then click **Add**.

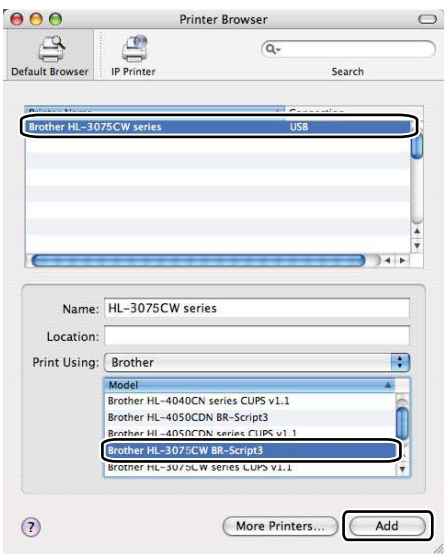

7 From the **Printer Setup Utility** menu, choose **Quit Printer Setup Utility**.

■ For Mac OS X 10.5.x and 10.6.x

1 From the Apple menu choose **System Preferences**.

2 Click **Print&Fax**.

3 Click **+** which is located below the **Printers** section.

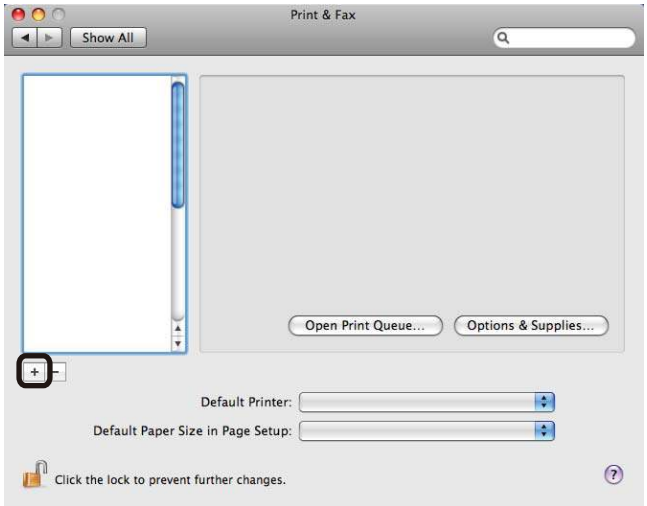

4 Choose the Printer Name and choose **Select a driver to use** in **Print Using**, and then choose the Printer Name that shows BR-Script in model name, and then click **Add**.

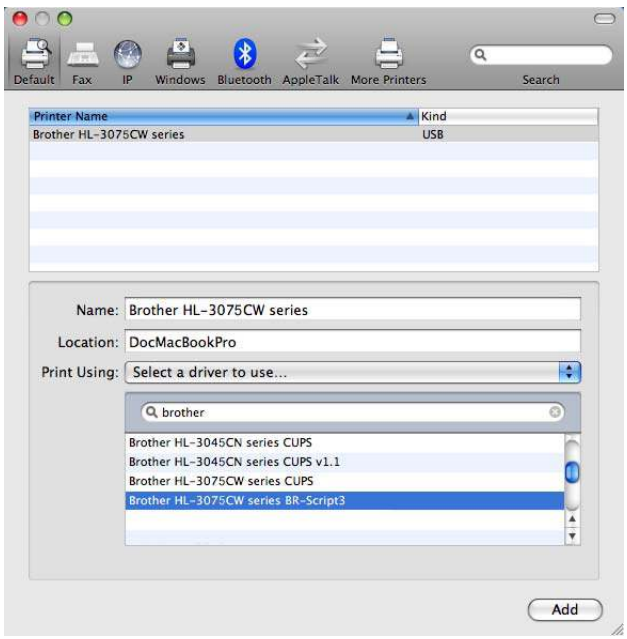

5 Quit **System Preferences**.

Uninstalling the printer driver

You can uninstall the printer driver that you have installed with the following steps.

Note

- This is not available if you installed the printer driver from the Windows **Add a printer** function.
- After uninstalling, we recommend that you restart your computer to remove files that were in use during the uninstall.

Printer driver for Windows®

1. Click the **Start** button, point to **All Programs**, **Brother** and then to your printer name.
2. Click **UnInstall**.
3. Follow the instructions on the screen.

Printer driver for Macintosh

For Mac OS X 10.4.11

1. Log in as an ‘Administrator’.
2. Run the **Printer Setup Utility** (from the **Go** menu, choose **Applications**, **Utilities**), then choose the printer you want to remove and remove it by clicking the **Delete** button.

For Mac OS X 10.5.x and 10.6.x

1. Log in as an ‘Administrator’.
2. From the Apple menu, choose **System Preferences**. Click **Print & Fax**, then choose the printer you want to remove and remove it by clicking the – button.
3. Click **OK** [1].

[1] **Delete Printer** for Mac OS X 10.6.x users

Software

Software for networks

BRAdmin Light

BRAdmin Light is a utility for initial setup of Brother network connected devices. This utility can search for Brother products on your network, view the status and configure basic network settings, such as IP address. The BRAdmin Light utility is available for Windows® XP, Windows Vista®, Windows® 7 and Windows Server® 2003/2008 and Mac OS X 10.4.11, 10.5.x, 10.6.x computers. For installing BRAdmin Light on Windows®, please see the Quick Setup Guide we provided with the machine. For Macintosh users, BRAdmin Light can be downloaded from the Brother Solutions Center at http://solutions.brother.com/.

For more information on BRAdmin Light, visit us at http://solutions.brother.com/.

BRAdmin Professional 3 (for Windows®)

BRAdmin Professional 3 is a utility for more advanced management of network connected Brother devices. This utility can search for Brother products on your network and view the device status from an easy to read explorer style window that changes color identifying the status of each device. You can configure network and device settings along with the ability to update device firmware from a Windows® computer on your LAN. BRAdmin Professional 3 can also log activity of brother devices on your network and export the log data in an HTML, CSV, TXT or SQL format.

For users who want to monitor locally connected printers, install the BRPrint Auditor software on the client PC. This utility allows you to monitor printers that are connected to a client PC via USB from BRAdmin Professional 3.

For more information and downloading, visit us at http://solutions.brother.com/.

Web BRAdmin (for Windows®)

Web BRAdmin is a utility for managing network connected Brother devices on your LAN and WAN. This utility can search for Brother products on your network, view the status and configure the network settings. Unlike BRAdmin Professional, which is designed for Windows® only, Web BRAdmin is a server based utility that can be accessed from any client computer with a web browser that supports JRE (Java Runtime Environment). By installing the Web BRAdmin server utility on a computer running IIS [1], connect to the Web BRAdmin server, which then communicates with the device itself.

For more information and downloading, visit us at http://solutions.brother.com/.

[1] Internet Information Server 4.0 or Internet Information Service 5.0 / 5.1 / 6.0 / 7.0

BRPrint Auditor (for Windows®)

The BRPrint Auditor software brings the monitoring power of Brother network management tools to locally connected machines. This utility allows a client computer to collect usage and status information from a machine connected via the USB interface. The BRPrint Auditor can then pass this information to another computer on the network running BRAdmin Professional 3 or Web BRAdmin 1.45 or greater. This allows the administrator to check items such as page counts, toner and drum status and the firmware version. In addition to reporting to Brother network management applications this utility can E-mail the usage and status information directly to a predefined E-mail address in a CSV or XML file format (SMTP Mail support required). The BRPrint Auditor utility also supports E-mail notification for reporting warning and error conditions.

Web Based Management (web browser)

Web Based Management (web browser) is a utility for managing network connected Brother devices, using the HTTP (Hyper Text Transfer Protocol). This utility can view the status of Brother products on your network and configure the machine or network settings using a standard web browser that is installed on your computer.

For more information, see *Chapter 10* of the *Network User's Guide* on the CD-ROM.

For increased security Web Based Management also support HTTPS. For more information, see *Chapter 14* of the *Network User's Guide* on the CD-ROM.

Driver Deployment Wizard (for Windows®)

This installer includes the Windows® printer driver and Brother network port driver (LPR). If the administrator installs the printer driver and port driver using this application, the administrator can save the file to the file server or send the file by E-mail to users. Then, each user just clicks that file to have the printer driver, port driver, IP address, and so on, automatically copied to their computer.

About emulation modes (HL-3075CW only)

This printer has the following emulation modes. You can change the setting by using the control panel or Web Based Management (Web browser).

- HP LaserJet Mode

  The HP LaserJet mode (or HP mode) is the emulation mode in which this printer supports the PCL6 language of the Hewlett-Packard LaserJet laser printer. Many applications support this type of laser printer. Using this mode will allow your printer to run at its best with those applications.

- BR-Script 3 Mode

  BR-Script is an original Brother page description language and a PostScript® language emulation interpreter. This printer supports level 3. The BR-Script interpreter of this printer allows you to control text and graphics on pages.

  For technical information about PostScript® commands, see the following manuals:

  - Adobe Systems Incorporated. PostScript® Language Reference, 3rd edition. Addison-Wesley Professional, 1999. ISBN: 0-201-37922-8
  - Adobe Systems Incorporated. PostScript® Language Program Design. Addison-Wesley Professional, 1988. ISBN: 0-201-14396-8
  - Adobe Systems Incorporated. PostScript® Language Tutorial and Cookbook. Addison-Wesley Professional, 1985. ISBN: 0-201-10179-3

Automatic emulation selection (HL-3075CW only)

This printer has an automatic emulation selection feature that is turned on by default. This lets it automatically change the emulation mode to suit the type of data it receives.

You can change the setting by using the control panel or Web Based Management (Web browser).

Automatic interface selection

This printer has an automatic interface selection feature that is turned on by default. This lets it automatically change the interface to USB, or Ethernet depending on which interface is receiving data.

Since the default setting is on for the automatic interface selection mode, simply connect the interface cable to the printer. Always turn off both your computer and printer when connecting or disconnecting the cable.

Auto Interface selection can take a few seconds to work. If you only use one interface it would be advisable to select that interface; use the control panel to access the `General Setup` menu, choose `Interface` and then choose `Select`. If only one interface is chosen, the printer will allocate the entire input buffer to that interface.

3 Control Panel

Control panel

This printer has one back lit Liquid Crystal Display (LCD), seven buttons and two Light Emitting Diodes (LEDs) on the control panel. The LCD is a 16 character single line display.

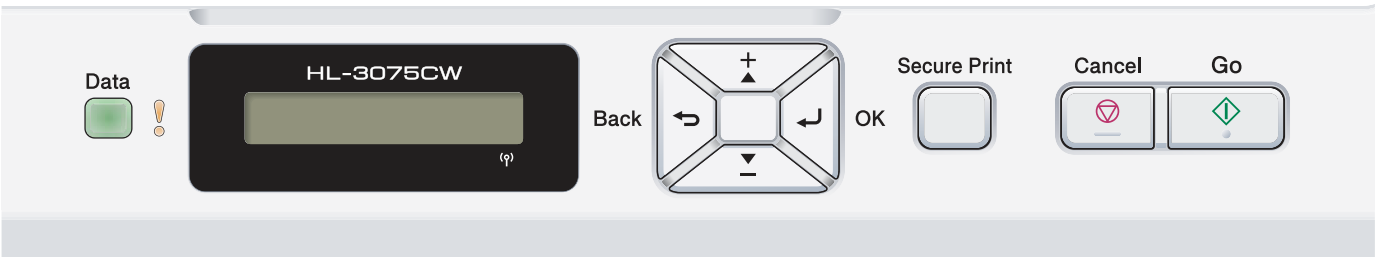

The illustration is based on HL-3075CW.

Buttons

You can control the basic printer operations and change various printer settings with eight buttons (**Go**, **Cancel**, **Secure Print**, **+**, **-**, **Back**, **OK**).

button	Operations
Go	Clear error messages. Pause and continue printing. Switch to Reprint mode.
Cancel	Stop and cancel the printing job in progress. Exit from the control panel menu, Reprint menu, Secure Print menu or Direct Print menu.
Secure Print	Choose the Secure Print menu.
+	Scroll backward through menus and the available options. Enter numbers and increase the number.
-	Scroll forward through menus and the available options. Enter numbers and decrease the number.
Back	Go back one level in the menu structure.
OK	Choose the control panel menu. Set the chosen menus and settings.

Go

You can pause printing by pressing **Go**. Pressing **Go** again restarts the print job. During a pause, the printer is offline.

Pressing **Go** allows you to choose the displayed option in the last menu level. After changing a setting, the printer returns to the Ready state.

If Data remains in the printer memory, pressing **Go** will print that remaining data.

You can clear some error indications by pressing **Go**. Follow the control panel instructions or see *Troubleshooting* on page 141 to clear all other errors.

You can switch to Reprint mode by pressing **Go** and holding it down for about 4 seconds. (For details, see *Reprinting documents* on page 78.

Note

- The options you have chosen are shown with an asterisk at the end of the display. Since the asterisk shows what you have chosen, you can easily see the current settings as you look through the LCD.
- If the printer is in Pause mode and you do not want to print the data left, press **Cancel**. Once the job has been canceled, the printer will return to the Ready state.

Cancel

You can cancel the processing or printing of data by pressing **Cancel**. The LCD shows `Cancel Printing.` until the job is canceled. To delete all jobs, press **Cancel** for about 4 seconds until the LCD shows `Cancel All Jobs` and then release it.

After canceling the job, the printer returns to the Ready state.
Pressing **Cancel** will exit the control panel menu and return the printer to the Ready state.

Secure Print

If you want to print a secure data protected by a password, press **Secure Print**. For details, see *Printing Secure data* on page 79

+ or - button

Moving through menus on the LCD

Pressing **+** or **-** when the printer is in the Ready state, takes it offline and the LCD will show the control panel menu.

Press to scroll through the menus and options. Press the button until you see the setting you want.

Entering numbers

You can enter numbers in two ways. You can press **+** or **-** to move up or down one number at a time, or you can hold down **+** or **-** to move faster. When you see the number you want, press **OK**.

Back

Pressing **Back** when the printer is in the Ready state takes it offline, and the LCD will show the control panel menu.

Pressing **Back** allows you to return to the previous level from the current menu level.

Back also allows you to choose the previous digit while setting numbers.

When you choose a setting and it does not have an asterisk (**OK** was not pressed), **Back** allows you to return to the previous menu level with the original setting unchanged.

OK

Pressing **OK** when the printer is in the Ready state takes it offline, and the LCD will show the control panel menu.

Pressing **OK** allows you to choose the displayed menu or option. After changing a setting, the LCD shows `Accepted` and then the printer returns to the previous menu level.

Note

The options you have chosen are shown with an asterisk at the end of the display. Since the asterisk shows what you have chosen, you can easily see the current settings as you look through the LCD.

LEDs

The LEDs are lights which show the printer status.

Data LED (Green)

LED indication	Meaning
On	Data is in the printer memory.
Blinking	Receiving or processing data.
Off	No remaining data in the memory.

Error LED (Orange)

LED indication	Meaning
Blinking	There is a problem with the printer.
Off	There is no problem with the printer.

LCD

The LCD shows the current printer status. When you use the buttons on the control panel, the LCD will change.
If there are any problems, the LCD will show the error message, maintenance message or call service message so you will know that you need to take action. (For more information about these messages, see *LCD messages* on page 142.)

Back light (HL-3075CW only)

Light	Meaning
Off	The printer is off or in sleep status.
Green (General, Error, Setting)	Ready to print Printing Warming up There is a problem with the printer. Choosing a menu (Control panel menu, Reprint menu or Direct Print menu) Pause

LCD messages

The message on the LCD shows the current printer status during normal operation.

```
Ready
```

The mark indicates the wireless signal strength with four levels. (. means no signal, means weak, means middle, and means strong.) (HL-3075CW only)

When an error has occurred, the type of error is displayed on the LCD message at first as shown below.

```
Cover is open
```

Next, the second message which shows information for clearing the error is displayed on the LCD message as shown below.

```
Close the Top Co
```

Printer status messages

The following table shows the printer status messages during normal operation:

Printer Status Message	Meaning
Cooling Down	The printer is cooling down.
Cancel Printing	Canceling the job.
Ignore Data	Printer is ignoring data processed using the PS driver.
Pause	The printer has suspended its operations. Press **Go** to start the printer again.
Please Wait	The printer is warming up. The printer is carrying out the calibration process.
Printing	Printing.
Ready	Ready to print.
Sleep	In Sleep mode.

Reprinting documents

Reprinting the last job

You can reprint the data from the last print job without sending it from the computer again.

Note

- Reprint function is not available when Secure Function Lock 2.0 (HL-3075CW only) is On. For more information about Secure Function Lock 2.0, see the *Chapter 14* of the *Network User's Guide* on the CD-ROM we have supplied.
- If you want to cancel reprinting, press **Cancel**.
- If the printer does not have enough memory to spool the print job data, it will not print the document.
- Pressing **+** or **-** makes the number of reprint copies decrease or increase. You can choose between 1 and 999 `Copies`.
- If you wait 30 seconds to continue the control panel operation, the LCD leaves the `Reprint` setting automatically.
- For more information about the settings in the printer driver, see *Advanced tab* on page 40.
- After turning the power switch off, the last job data will be deleted.

How to reprint the last job

Note

If you print with the Windows® printer driver we have supplied with the printer, the settings for **Use Reprint** in the printer driver will take priority over the settings made on the control panel. (For more information, see *Use Reprint* on page 43.)

1. Make sure that the `Reprint` setting is `On` by using the buttons on the control panel to enter the `General Setup` menu.
2. Press **Go** for about 4 seconds and release it. Make sure that the LCD shows the following message.

   `Reprint : Print`

3. Press **+** or **-** to choose `Print`. Press **OK**.

   `Reprint : Print`

4. Press **+** to enter the number of copies you want.

   `Copies =3`

5. Press **OK** or **Go**.

   `Printing`

   ↓

   `Reprint : Print`

Deleting the last job

Choose `Delete` in step ❸ on *How to reprint the last job* on page 78.

Canceling the reprint job

If you want to cancel the current reprint job, press **Cancel**. **Cancel** also allows you to cancel a paused reprint job.

Printing Secure data

Secure data

Secure documents are protected by a password and only those people who know the password will be able to print the document. The printer will not print the document when you send it for printing. To print the document, you must use the control panel of the printer (with the password). Secure data will be deleted after printing once.

When the area to spool data is full, the LCD shows `Out of Memory`. Press Cancel to return the Ready state.

If you want to delete the spooled data, you can carry out this operation using the control panel or the web-based management application.

Note

- The secure data will be deleted when the printer is turned off.
- If you wait 30 seconds to continue the control panel operation, the LCD leaves the Secure Print setting automatically.
- For more information about the settings in the printer driver and how to create secure data, see *Secure Print* on page 41 (For Windows® printer driver), *Advanced options* on page 50 (For Windows® BR-Script printer driver) or *Secure Print* on page 58 (For Macintosh printer driver).

How to print Secure data

1. Press **Secure Print**.
2. Press **+** or **-** to choose the user name. Press **OK**.

   `XXXXXX`

3. Press **+** or **-** to choose the job. Press **OK**.

   `1.XXXXXX.doc`

4. Press **+** or **-** to enter your password. Press **OK**.

   `Password:XXXX`

5. Press **+** or **-** to choose `Print`. Press **OK**.

   `Print`

6. Press **+** or **-** to enter the number of copies you want.

   `Copies = 3`

7 Press **OK** or **Go**.

```
Printing
   ↓
Ready
```

Deleting secure data

Choose the user name and the job you want to delete in steps ❶ to ❹, and then choose `Delete` (instead of Print) in step ❺.

Canceling the secure data job (printing secure data)

If you want to cancel the current secure print job, press **Cancel**. **Cancel** also allows you to cancel a paused secure print job.

Using the control panel LCD menu

When you use the Menu keys (**+**, **-**, **OK** or **Back**), remember the following basic steps:

- If no control panel operations are performed for 30 seconds, the LCD automatically returns to `Ready`.
- When you press **OK** to choose a setting, `Accepted` appears on the LCD. After that, the LCD returns to the previous menu level.
- When you press **Go** to choose a setting, `Accepted` appears on the LCD. After that, the LCD returns to the Ready state.
- After changing the status or a setting, pressing **Back** before you press **OK** will cause the LCD to return to the previous menu level with the original settings unchanged.
- There are two ways to input numbers. You can press **+** or **-** to scroll up or down one number at a time, or you can hold down **+** or **-** to scroll faster. The blinking number is the one that you can change.

For example: If you want to choose the paper size for Tray 1, as follows.

1. Press any of the **Menu** buttons (**+**, **-**, **OK** or **Back**) to take the printer offline.

   `Ready`

   ↓

   `Machine Info.`

2. Press **+** or **-** to choose `Paper Tray`.

   `Paper Tray`

3. Press **OK** to move to the next menu level.

   `Manual Feed`

4. Press **+** or **-** to choose `Tray1 Size`.

   `Tray1 Size`

5. Press **OK** to move to the next menu level.

   `Any *`

6. Press **+** or **-** to choose the paper size.

   `A4`

7. Press **OK** or **Go**.
   `Accepted` appears on the LCD.

   `Accepted`

Menu table

There are nine menus. For more information about the selections available in each menu, see the tables below.

Note

The control panel LCD names for the paper trays are as follows.

- Standard paper tray: `Tray1`
- Manual feed slot: `Manual Feed`

Machine Info.

Submenu	Menu Selections	Options	Descriptions
Print Settings			Prints the Printer Settings page.
Print NetSetting			Prints only the Network Settings page.
Test Print			Prints the test page.
Demo Print			Prints the demonstration sheet.
Print Font (HL-3075CW only)	HP LaserJet		Prints the font list and samples of HP LaserJet.
	BR-Script 3		Prints the font list and samples of BR-Script.
Serial No.			Shows the printer serial number.
Version	Main Version		Shows the main firmware version.
	Sub Version		Shows the sub firmware version.
	RAM Size		Shows the size of memory in this printer.
Page Count	Total		Shows the current total printed pages.
	Color		Shows the current total color printed pages.
	Monochrome		Shows the current total monochrome printed pages.
Image Count	Black(K)		Shows the amount of images produced by the black color.
	Cyan(C)		Shows the amount of images produced by the cyan color.
	Magenta(M)		Shows the amount of images produced by the magenta color.
	Yellow(Y)		Shows the amount of images produced by the yellow color.
The factory settings are shown in Bold with an asterisk.			

Machine Info. (continued)

Submenu	Menu Selections	Options	Descriptions
Drum Count	Black(K)		Shows the current total pages printed for black drum unit.
	Cyan(C)		Shows the current total pages printed for cyan drum unit.
	Magenta(M)		Shows the current total pages printed for magenta drum unit.
	Yellow(Y)		Shows the current total pages printed for yellow drum unit.
Parts Life	Drum Life	Black(K)	Shows the remaining life for the black drum unit.
		Cyan(C)	Shows the remaining life for the cyan drum unit.
		Magenta(M)	Shows the remaining life for the magenta drum unit.
		Yellow(Y)	Shows the remaining life for the yellow drum unit.
	Belt Life		Shows the remaining life for the belt unit.
	PF Kit1 Life		Shows the pages left to print with the PF kit 1.
	Fuser Life		Shows the pages left to print with the fuser unit.
Reset Parts Life (Appears only when replacement parts have been changed)	Drum Unit	Black(K)	Resets the black drum unit life. Appears when you replace the drum unit.
		Cyan(C)	Resets the cyan drum unit life. Appears when you replace the drum unit.
		Magenta(M)	Resets the magenta drum unit life. Appears when you replace the drum unit.
		Yellow(Y)	Resets the yellow drum unit life. Appears when you replace the drum unit.
	Belt Unit		Resets the belt unit life. Appears when you replace the belt unit.
The factory settings are shown in Bold with an asterisk.			

Paper Tray

Submenu	Options	Descriptions
Manual Feed	**Off***/On	Chooses whether to feed paper manually.
Tray1 Size	**Any***/Letter/Legal/A4...	Choose the size of paper you loaded in the standard paper tray.
The factory settings are shown in Bold with an asterisk.		

General Setup

Submenu	Menu Selections	Options	Descriptions
Local Language		**English***/Français...	Changes the LCD language for your country.
Ecology	Sleep Time	0/1/2/3/4/**5***...Min	Sets the time to return to Power Save mode.
	Toner Save	**Off***/On	Increases the page yield of the toner cartridge.
Panel Control	Button Repeat	**0.1***/0.4/0.6/0.8/1.0/1.4/1.8/2.0 Sec	Sets the time for the LCD message to change when holding **+** or **-** at intervals.
	Message Scroll	**Level 1***/Level 2.../Level 10	Sets the time in seconds that an LCD message will scroll across the LCD. From Level 1=0.2 sec to Level 10=2.0 sec.
	LCD Contrast	-□□■□□+	Adjusts the contrast of the LCD.
	Auto Online	**On***/Off	Return to Ready state automatically.
Setting Lock		**Off***/On	Turns the lock panel settings On or Off using the password.
Reprint		**Off***/On	Turns the reprint settings On or Off.
Interface	Select	**Auto***/USB/Network	Choose the interface you use.
	Auto IF Time	1/2/3/4/**5***.../99 (sec)	You need to set the time-out period for the auto interface selection.
	Input Buffer	Level 1/2/3/**4***.../7	Increases or decreases the input buffer capacity.
The factory settings are shown in Bold with an asterisk.			

Print Menu

Submenu	Menu Selections	Options	Descriptions
Emulation (HL-3075CW only)		**Auto***/HP LaserJet/BR-Script 3	Choose the emulation mode you use.
Auto Continue		**Off***/On	Choose whether to automatically clear the removable error.
Output Color (HL-3075CW only)		**Auto***/Color/Mono	Set the output color.
Media Type (HL-3075CW only)		**Plain Paper***/Thick Paper/Thicker Paper/Thin Paper/Recycled Paper/Bond Paper/Envelopes/Env.Thick/Env.Thin/Hagaki/Label	Sets the type of paper.
The factory settings are shown in Bold with an asterisk.			

Print Menu (continued)

Submenu	Menu Selections	Options	Descriptions
Paper (HL-3075CW only)		**Letter***/Legal/A4/Executive/Com-10/DL/JIS B5/B5/A5/A5 L/JIS B6/B6/A6/Monarch/C5/A4 Long/Folio/DL L/Hagaki	Sets the size of paper.
Copies (HL-3075CW only)		**1***/2.../999	Sets the number of printed pages.
Orientation (HL-3075CW only)		**Portrait***/Landscape	This printer can print pages in portrait or landscape orientation.
Print Position	X Offset	-500/-499.../**0***.../499/500Dots	Moves the print start position (at the top-left corner of pages) horizontally up to -500 (left) to +500 (right) dots in 300 dpi.
	Y Offset	-50/-49.../**0***.../499/500Dots	Moves the print start position (at the top-left corner of pages) vertically up to -50 (up) to +500 (down) dots in 300 dpi.
Auto FF (HL-3075CW only)		**Off***/On	Allows you to print the remaining data without pressing **Go**.
The factory settings are shown in Bold with an asterisk.			

Print Menu (continued)

Submenu	Menu Selections	Options	Descriptions
HP LaserJet (HL-3075CW only)	Font No.	I000.../**I059***.../I071	
	Font Pitch	0.44/**10***.../99.99	
	Font Point	4.00/**12***.../999.75	
	Symbol Set	**PC-8***...	Sets the symbol set or the character set.
	Table Print		Prints code table. If Change Emulation appears on the LCD, choose Auto or HP LaserJet in Emulation of Print Menu. (See page 84.)
	Auto LF	**Off***/On	ON: CR → CR+LF,OFF: CR → CR
	Auto CR	**Off***/On	ON: LF→LF+CR, FF→FF+CR, or VT → VT+CR OFF: LF → LF, FF → FF, or VT → VT
	Auto WRAP	**Off***/On	Chooses whether a line feed and carriage return will happen when the printer reaches the right margin.
	Auto SKIP	**On***/Off	Chooses whether a line feed and carriage return will happen when the printer position reaches the bottom margin.
	Left Margin	##	Sets the left margin at column 0 to 70 columns at 10 cpi.
	Right Margin	##	Sets the right margin at column 10 to 80 columns at 10 cpi.
	Top Margin	#.##	Sets the top margin at a distance from the top edge of the paper: 0, 0.33, 0.5, 1.0, 1.5 or 2.0. The default setting is 0.5.
	Bottom Margin	#.##	Sets the bottom margin at a distance from the bottom edge of the paper - 0, 0.33, 0.5, 1.0, 1.5 or 2.0. The default setting is 0.5.
	Lines	####	Sets the number of lines on each page from 5 to 128 lines.
BR-Script 3 (HL-3075CW only)	Error Print	**On***/Off	
	CAPT	**Off***/On	

The factory settings are shown in Bold with an asterisk.

Network for HL-3045CN users

Submenu	Menu Selections	Options	Descriptions
TCP/IP	Boot Method	**Auto***/Static/RARP/BOOTP/DHCP	Choose the IP method that best suits your needs.
	IP Address	###.###.###.### **(000.000.000.000)*** [1]	Enter the IP address.
	Subnet Mask	###.###.###.### **(000.000.000.000)*** [1]	Enter the Subnet mask.
	Gateway	###.###.###.### **(000.000.000.000)***	Enter the Gateway address.
	IP Boot Tries	##### (**3***)	
	APIPA	**On***/Off	Automatically allocates the IP address from the link-local address range. [1]
	IPv6	**Off***/On	
Ethernet		**Auto***/100B-FD/100B-HD/10B-FD/10B-HD	Chooses Ethernet link mode.
Factory Reset	Restores all network settings of the internal print server to the factory default.		
The factory settings are shown in Bold with an asterisk.			

[1] On connection to the network, if the machine's 'Boot Method' is 'Auto' the machine will attempt to automatically set the IP address and Subnet Mask from a boot server such as DHCP or BOOTP. If a boot server cannot be found, an APIPA IP address will be allocated, such as 169. 254. [001-254]. [000-255]. If the 'Boot Method' of the machine is set to 'Static' you will need to manually enter an IP address from the machine's control panel.

Network for HL-3075CW users

Submenu 1	Submenu 2	Menu Selections	Options	Descriptions
Wired LAN	TCP/IP	Boot Method	**Auto***/Static/RARP/BOOTP/DHCP	Choose the IP method that best suits your needs.
		IP Address	###.###.###.### **(000.000.000.000)*** [1]	Enter the IP address.
		Subnet Mask	###.###.###.### **(000.000.000.000)*** [1]	Enter the Subnet mask.
		Gateway	###.###.###.### **(000.000.000.000)***	Enter the Gateway address.
		IP Boot Tries	##### (**3***)	
		APIPA	**On***/Off	Automatically allocates the IP address from the link-local address range. [1]
		IPv6	**Off***/On	
	Ethernet		**Auto***/100B-FD/100B-HD/10B-FD/10B-HD	Chooses Ethernet link mode.
	Set to Default	Restores wired network settings of the internal print server to the factory default.		
	Wired Enable		**On***/Off	Chooses Ethernet link mode.
WLAN	TCP/IP	Boot Method	**Auto***/Static/RARP/BOOTP/DHCP	Choose the IP method that best suits your needs.
		IP Address	###.###.###.### **(000.000.000.000)*** [1]	Enter the IP address.
		Subnet Mask	###.###.###.### **(000.000.000.000)*** [1]	Enter the Subnet mask.
		Gateway	###.###.###.### **(000.000.000.000)***	Enter the Gateway address.
		IP Boot Tries	# (**3***)	
		APIPA	**On***/Off	Automatically allocates the IP address from the link-local address range. [1]
		IPv6	**Off***/On	
	SES/WPS/AOSS			
	WPS w/PIN Code			

The factory settings are shown in Bold with an asterisk.

Network for HL-3075CW users (continued)

Submenu 1	Submenu 2	Menu Selections	Options	Descriptions
	WLAN Status (Appears only when WLAN Enable is On.)	Status		
		Signal		
		Channel		
		Speed		
		SSID		Shows SSID [uses a maximum of 32 digits and characters 0-9, a-z and A-Z in ASCII values]
		Comm. Mode	**Ad-hoc***/Infrastructure	Shows the current Communication Mode.
	Set to Default			Restores wired network settings of the internal print server to the factory default.
	WLAN Enable		**Off***/On	Chooses Ethernet link mode.
Factory Reset	Restores all network settings of the internal print server to the factory default.			
The factory settings are shown in Bold with an asterisk.				

[1] On connection to the network, if the machine's 'IP METHOD' is 'AUTO' the machine will attempt to automatically set the IP address and Subnet Mask from a boot server such as DHCP or BOOTP. If a boot server cannot be found an APIPA IP address will be allocated, such as 169.254.[001-254].[000-255]. If the 'IP METHOD' of the machine is set to 'STATIC' you will need to manually enter an IP address from the machine's control panel.

Reset Menu

Display Shows	Description
Reset Printer	Resets the printer and restores all printer settings (including command settings) to settings you have previously made with the control panel buttons.
Factory Reset	Resets the printer and restores the printer settings (including command settings) to the factory default settings.
The factory settings are shown in Bold with an asterisk.	

Color Correction

Submenu	Menu Selections	Options	Descriptions
Frequency	**Normal***/Low/Off		Sets the interval time you want to carry out the auto color correction
Color Calibration	Calibrate		Carry out calibration to revise the colors. (See *Calibration* on page 95.)
	Reset		Set the calibration parameters back to the default settings. (See *Calibration* on page 95.)
The factory settings are shown in Bold with an asterisk.			

Color Correction (continued)

Submenu	Menu Selections	Options	Descriptions
Auto Regist.	Registration		Adjusts the print position of each color automatically. (See *Auto Registration* on page 96.)
Manual Regist.	Print Chart		Prints the chart to manually check the registration of the colors. (See *Manual Registration* on page 97.)
	Set Registration	1 Magenta/2 Cyan/ 3 Yellow/4 Magenta/ 5 Cyan/6 Yellow/ 7 Magenta/8 Cyan/ 9 Yellow	Enter the correction value on the chart you printed from the Print Chart. (See *Manual Registration* on page 97.)
Drum Cleaning	Carry out cleaning the drum unit to improve the print quality problem. (See *Small spots on the printed pages* in *Cleaning the drum unit* on page 133.)		
The factory settings are shown in Bold with an asterisk.			

Direct Print (HL-3075CW only)

Submenu	Menu Selections	Options	Descriptions
Paper Size		**Letter***/Legal/A4/ Executive/JIS B5/B5/A5/ A5 L/JIS B6/B6/A6/A4Long/Folio	Sets the size of paper for direct print.
Media Type		**Plain Paper***/Thick Paper/Thicker Paper/ Thin Paper/Recycled Paper/Bond Paper	Sets the type of paper for direct print.
Multiple Page		**1in1***/2in1/4in1/9in1/ 16in1/25in1/ 1in2×2pages/1in3×3pages/1in4×4pages/1in5×5pages	Sets the pattern if you want to print multiple pages on a single sheet or one page on multiple sheets.
Orientation		**Portrait***/Landscape	This printer can print pages in portrait or landscape orientation.
Collate		**On***/Off	
Print Quality		**Normal***/Fine	
PDF Option		**Document***/Document&Stamps/Document&Markup	Set the information you want to add to the document.
Index Print		**Simple***/Details	Sets the format of the index for direct print. If you choose Details, printing time will be longer. (See *Printing data from a USB flash memory drive with direct print (HL-3075CW only)* on page 27.)
The factory settings are shown in Bold with an asterisk.			

PictBridge (HL-3075CW only)

Submenu	Menu Selections	Options	Descriptions
Paper Size		**Letter***/A4/B5/A5/B6/A6	Sets the size of paper for PictBridge.
Orientation		<For Letter,A4,B5> **Portrait***/Landscape <For A5,B6,A6> Portrait/**Landscape***	This printer can print pages in portrait or landscape orientation for PictBridge.
Date&Time		**Off***/On	Prints the date and time.
File Name		**Off***/On	Prints the file name.
Print Quality		**Normal***/Fine	
The factory settings are shown in Bold with an asterisk.			

Example of changing a menu setting

Setting IP address

1. Press any of the **Menu** buttons (**+**, **-**, **OK** or **Back**) to take the printer offline.
2. Press **+** or **-** to choose `Network`.

   `Select ▲▼ or OK`
   ↓
   `Network`
3. (HL-3075CW only) Press **+** or **-** to choose `Wired LAN` or `WLAN`.

   `Wired LAN`
4. Press **OK**.

   `TCP/IP`
5. Press **OK**.

   `Boot Method`
6. Press the **-** button.

   `IP Address`
7. Press **OK**. The first part of the number will be blinking.

   `169.254.000.192`
8. Press **+** or **-** to increase or decrease the number. Press **OK** to go to the next number.

   `129.254.000.192`
9. Repeat step ❽ until you have set your IP address.

   `123.045.067.089`
10. Press **OK** or **Go** to finish the IP address.

    `Accepted`

Default settings

The printer has three levels of default settings; the default settings have been set at its factory before shipment (see *Menu table* on page 82).

- Network default settings
- Factory reset
- Settings reset

Note

- You cannot modify the preset default settings.
- Page counter can never be changed.

Network default settings

If you want to reset only the print server back to its default settings (by resetting all network information such as the password and IP address), follow these steps:

1. Press **+** or **-** to choose `Network`. Press **OK**.

   `Select ▲▼ or OK`
   ↓
   `Network`

2. Press **+** or **-** to choose `Factory Reset`. Press **OK**.

   `Factory Reset`

3. Press **OK** again.

   `Restart Printer?`

4. The printer will restart automatically.

Factory Reset

You can partially reset the machine back to its default printer settings. The settings that will not be reset are the `Interface`, `Local Language`, `Reprint`, `Set Registration`, `Setting Lock`, Secure Function Lock 2.0 (HL-3075CW only) and the Network settings:

1. Press **+** or **-** to choose `Reset Menu`. Press **OK**.

   `Select ▲▼ or OK`
   ↓
   `Reset Menu`

2. Press **+** or **-** to choose `Factory Reset`. Press **OK**.

   `Factory Reset`

3. Press **OK** again.

   `OK?`

Settings Reset

This operation will reset all the machine settings back to the settings that were set at the factory:

1. Disconnect the network cable from the printer; otherwise the network settings (such as IP address) will not be reset.
2. Press **+** or **-** to choose `Reset Menu`. Press **OK**.

   `Select ▲▼ or OK`

   ↓

   `Reset Menu`
3. Press **+** and **Cancel** at the same time.

   `Reset Printer`
4. Press **OK** after the following message appears.

   `Settings Reset`
5. Press **OK** again.

   `Reset Printer?`
6. The printer will restart automatically.

Frequency

You can set how often the color correction (Color Calibration and Auto Registration) occurs. The default setting is Normal. The color correction process consumes some amount of the toner.

1. Press **+** or **-** to choose `Color Correction`. Press **OK**.
2. Press **+** or **-** to choose `Frequency`. Press **OK**.
3. Press **+** or **-** to choose `Normal, Low` or `Off`. Press **OK**.

Calibration

The output density for each color may vary depending on the environment the machine is in such as temperature and humidity. Calibration helps you to improve the color density.

Note

If you print using the Windows® printer driver, you need to perform the calibration from the Windows® printer driver. See *Color Calibration* on page 43.

If you print using the Macintosh printer driver, you need to perform the calibration using the status monitor. See *Status Monitor* on page 64 for how to turn the status monitor on.

1. Press **+** or **-** to choose `Color Correction`. Press **OK**.

   `Select ▲▼ or OK`
   ↓
   `Color Correction`

2. Press **OK**.

   `ColorCalibration`

3. Press **OK**.

   `Calibrate`

4. Press **OK** again.

   `OK?`

You can reset the calibration parameters back to those set at the factory.

1. Press **+** or **-** to choose `Color Correction`. Press **OK**.

   `Select ▲▼ or OK`
   ↓
   `Color Correction`

2. Press **OK**.

   `ColorCalibration`

3 Press **+** or **-** to choose `Reset`. Press **OK**.

```
Reset
```

4 Press **OK** again.

```
OK?
```

Auto Registration

You can adjust the print position of each color automatically.

1 Press **+** or **-** to choose `Color Correction`. Press **OK**.

```
Select ▲▼ or OK
        ↓
Color Correction
```

2 Press **+** or **-** to choose `Auto Regist.`. Press **OK**.

```
Auto Regist.
```

3 Press **OK**.

```
Registration
```

4 Press **OK** again.

```
OK?
```

Manual Registration

Print Chart

You can print the color registration chart to manually check the registration of the colors.

1. Press **+** or **-** to choose `Color Correction`. Press **OK**.

   `Select ▲▼ or OK`
   ↓
   `Color Correction`

2. Press **+** or **-** to choose `Manual Regist.`. Press **OK**.

   `Manual Regist.`

3. Press **OK**.

   `Print Chart`

Set Registration

You can correct the color registration manually.

1. Press **+** or **-** to choose `Color Correction`. Press **OK**.

   `Select ▲▼ or OK`
   ↓
   `Color Correction`

2. Press **+** or **-** to choose `Manual Regist.`. Press **OK**.

   `Manual Regist.`

3. Press **+** or **-** to choose `Set Registration`. Press **OK** again.

   `Set Registration`

4. To set the color registration, follow the instruction on Color Registration Chart.

5. Press **OK**.

4 Option

SO-DIMM

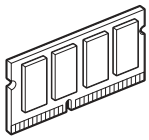

The printer has 32 MB (HL-3045CN) or 64 MB (HL-3075CW) of standard memory and one slot for optional memory expansion. You can expand the memory up to 544 MB (HL-3045CN) or 576 MB (HL-3075CW) by installing a Dual In-line Memory Module (SO-DIMM).

In general, the machine uses industry-standard SO-DIMM with the following specifications:

- Type: 144 pin and 64 bit output
- CAS latency: 2
- Clock frequency: 100 MHz or more
- Capacity: 64, 128, 256 or 512 MB
- Height: 31.75 mm (1.25 in.)
- SDRAM can be used.

For information regarding memory for your Brother machine please visit us at: www.brother-usa.com/support/memory.

Note

- There might be some SO-DIMMs that will not work with the printer.
- For more information, call the dealer you bought the printer from or Brother Customer Service.

Installing extra memory

Note

Always turn off the printer power switch before installing or removing the SO-DIMM.

1. Turn off the printer power switch, and then unplug the printer. Disconnect the interface cable from the printer.
2. Remove the plastic (1) and then the metal (2) SO-DIMM covers.

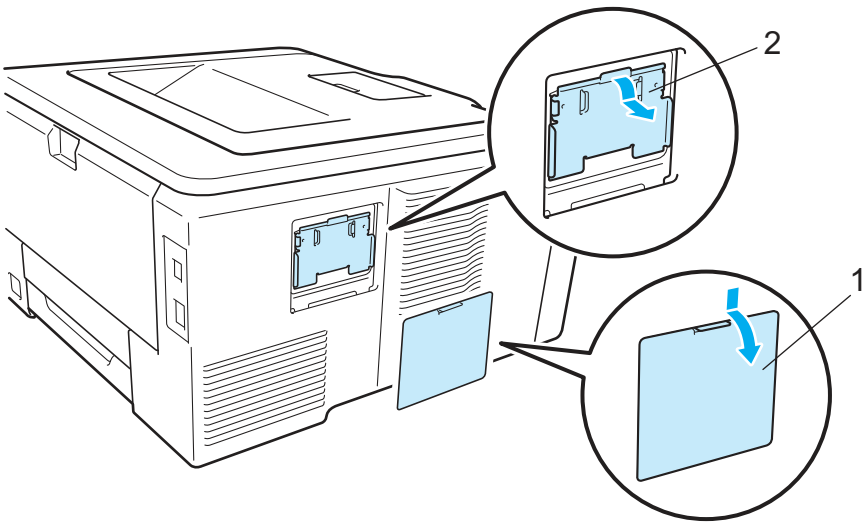

3. Unpack the SO-DIMM and hold it by its edges.

CAUTION

To prevent damage to the printer from static electricity, DO NOT touch the memory chips or the board surface.

4 Hold the SO-DIMM by the edges and align the notches in the SO-DIMM with the protrusions in the slot. Insert the SO-DIMM diagonally (1), then tilt it toward the interface board until it clicks into place (2).

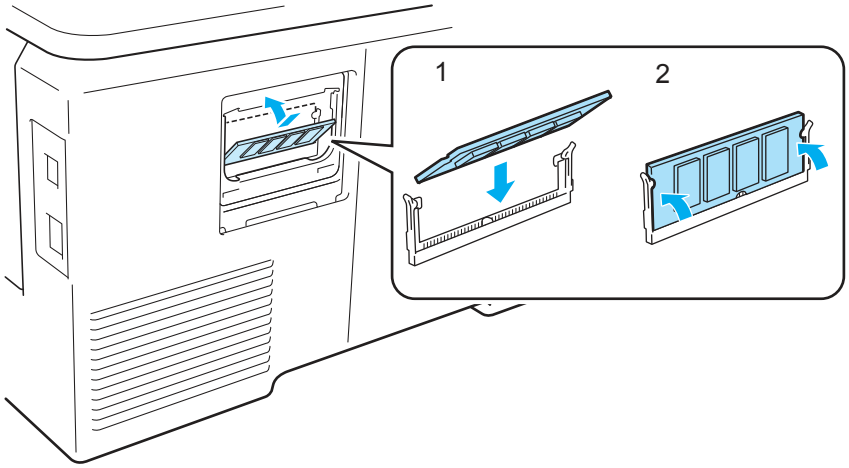

5 Put the metal (2) and then the plastic (1) SO-DIMM covers back on.

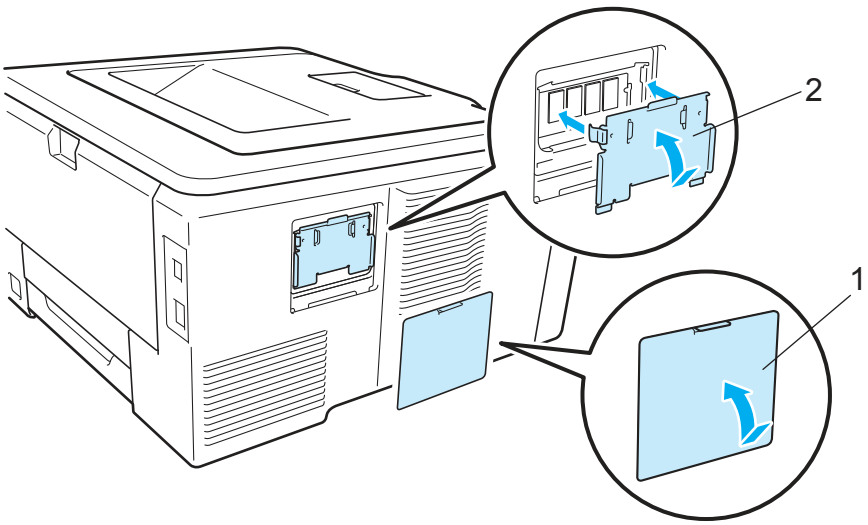

6 Reconnect the interface cable to your printer. Plug the printer back in, and then turn on the power switch.

Note

To make sure that you have installed the SO-DIMM properly, you can print the printer settings page that shows the current memory size. (See *Machine Info.* on page 82.)

5 Routine Maintenance

Replacing the consumable items

The following messages appear on the LCD in the Ready state. These messages provide advanced warnings to replace the consumable items before they reach the end of their life. To avoid any inconvenience, you may want to buy spare consumable items before the printer stops printing.

LCD messages	Consumable item to replace	Approximate life	How to replace	Order No.
Toner Low (X)	Toner cartridge **X** = **C**, **M**, **Y**, **K** **C** = Cyan **M** = Magenta **Y** = Yellow **K** = Black	<Black> 2,200 pages [1 2] <Cyan, Magenta,Yellow> 1,400 pages [1 2]	See page 103	TN-210BK, TN-210C, TN-210M, TN-210Y
Drums End Soon	4 Drum units	15,000 pages [1 3 4]	See page 111	DR-210CL [5]
Drum End Soon(X)	1 Drum unit **X** = **C**, **M**, **Y**, **K** **C** = Cyan **M** = Magenta **Y** = Yellow **K** = Black	15,000 pages [1 3 4]	See page 111	DR-210CL-BK [6], DR-210CL-CMY [7]
Belt End Soon	Belt unit	50,000 pages [1]	See page 117	BU-200CL
WT Box End Soon	Waste toner box	50,000 pages [1]	See page 121	WT-200CL

1 A4 or Letter size single-sided pages.

2 Approx. cartridge yield is declared in accordance with ISO/IEC 19798.

3 1 page per job.

4 Drum life is approximate and may vary by type of use.

5 Contains 4 pc. Drum Set.

6 Contains 1 pc. Black Drum Unit.

7 Contains 1 pc. Color Drum Unit.

You will need to replace certain parts and clean the printer regularly.

LCD messages	Consumable item to replace	Approximate life	How to replace	Order No.
`Replace Toner`	Toner cartridge	<Black> 2,200 pages [1 2] <Cyan, Magenta,Yellow> 1,400 pages [1 2]	See page 103	TN-210BK, TN-210C, TN-210M, TN-210Y
`Replace Drums`	4 Drum units	15,000 pages [1 3 4]	See page 112	DR-210CL [5]
`Replace Drum (X)`	1 Drum unit **X** = **C**, **M**, **Y**, **K** **C** = Cyan **M** = Magenta **Y** = Yellow **K** = Black	15,000 pages [1 3 4]	See page 112	DR-210CL-BK [6], DR-210CL-CMY [7]
`Drum Error` [8] <Scrolling message> `Replace the Drum Unit.`	Drum unit	15,000 pages [1 3 4]	See page 112	
`Replace Belt`	Belt unit	50,000 pages [1]	See page 117	BU-200CL
`Replace WT Box`	Waste toner box	50,000 pages [1]	See page 121	WT-200CL
`Replace Fuser`	Fuser unit	50,000 pages [1]	Call your dealer or Brother Customer Service for a replacement fuser unit.	
`Replace PF kit1`	Paper feeding kit	50,000 pages [1]	Call your dealer or Brother Customer Service for a replacement paper feeding kit 1.	

1 A4 or Letter size single-sided pages.

2 Approx. cartridge yield is declared in accordance with ISO/IEC 19798.

3 1 page per job.

4 Drum life is approximate and may vary by type of use.

5 Contains 4 pc. Drum Set.

6 Contains 1 pc. Black Drum Unit.

7 Contains 1 pc. Color Drum Unit.

8 The `Drum Error` message has two cases: If the scroll message shows `Replace the Drum Unit.` you will need to replace the drum unit. If the scrolling message shows `Slide the Green tab on Drum Unit.` you do not need to replace the drum unit, you just need to clean the corona wires. (See *Cleaning the corona wires* on page 130.)

Note

- Go to http://www.brother-usa.com/environment/ for instructions on how to return the used toner cartridge to the brother collection program. If you choose not to return your used toner cartridge, please discard the used toner cartridge according to local regulations, keeping it separate from domestic waste. If you have questions, call your local waste disposal office.
- We recommend placing used consumable items on a piece of paper to prevent accidentally spilling or scattering the material inside.
- If you use paper that is not a direct equivalent for the recommended paper, the life of consumable items and printer parts may be reduced.
- The projected life for each of toner cartridges and a waste toner box is based on ISO/IEC 19798. Frequency of replacement will vary depending on the complexity of printed pages, percentage of coverage and type of media used.

Toner cartridges

A new toner cartridge can print approximately 2,200 pages (black) or approximately 1,400 pages (yellow, magenta, cyan) [1].

Note

- The toner cartridges that come supplied with the printer are starter toners. A starter toner can print approximately 1,000 pages [1].
- The amount of toner used varies according to what is printed on the page and the print density setting.
- If you change the print density setting for lighter or darker printing, the amount of toner used will change.
- Wait to unpack the toner cartridge until immediately before you put it into the printer.

[1] A4 or Letter size single-sided pages. Approx. cartridge yield is declared in accordance with ISO/IEC 19798.

Toner Low message

```
Toner Low (X)
```

If the LCD shows `Toner Low`, the printer has nearly run out of toner. Buy a new toner cartridge and have it ready before you get a `Replace Toner` message. (X) shows the toner color that is near the end of its life. ((K)=Black, (Y)=Yellow, (M)=Magenta, (C)=Cyan). To replace the toner cartridge, see *Replacing the toner cartridges* on page 104.

The `Toner Low (X)` message appears for one minute after each print job.

Replace Toner message

When the following message appears on the LCD, you need to replace the toner cartridge:

```
Replace Toner
```

The scrolling message on the LCD indicates which color you need to replace.

Replacing the toner cartridges

Note

- To ensure high quality printing, we recommend that you use only genuine Brother toner cartridges. When you want to buy toner cartridges, call your dealer.
- We recommend that you clean the printer when you replace the toner cartridge. See *Cleaning* on page 127.

1. Turn off the printer power switch. Fully open the top cover by lifting up on the handle (1).

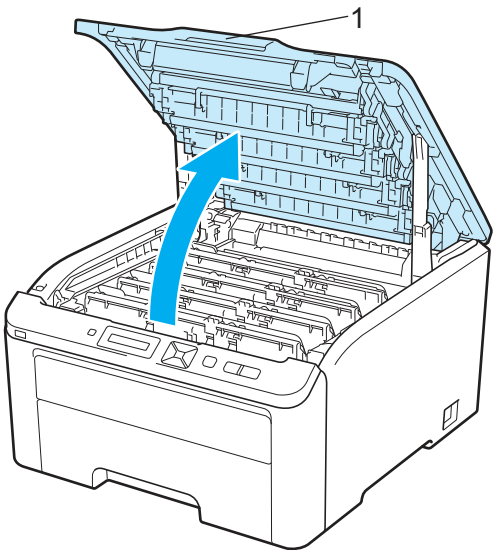

2. Take out the drum unit and toner cartridge assembly for the color shown on the LCD.

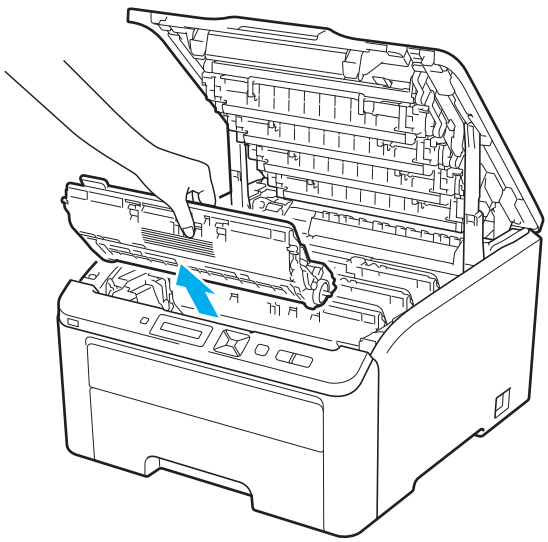

3 Push down the green-labeled lock lever (1) and take the toner cartridge out of the drum unit.

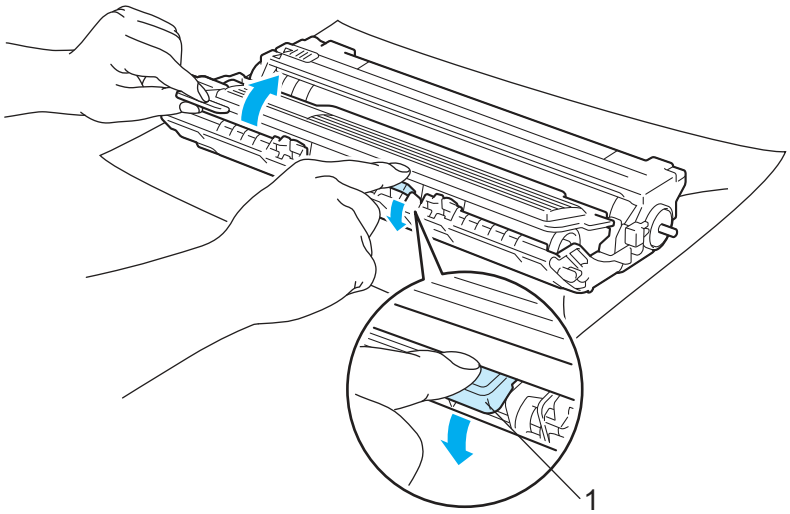

WARNING

DO NOT put a toner cartridge into a fire. It could explode, resulting in injuries.

DO NOT use cleaning materials that contain ammonia, alcohol, any type of spray, or any type of flammable substance to clean the outside or inside of the machine. Doing this may cause a fire or electrical shock. See *Cleaning* on page 127 for how to clean the printer.

Be careful not to inhale toner.

IMPORTANT

- We recommend that you place the drum unit and toner cartridge assembly on a clean, flat surface with a sheet of disposable paper or cloth underneath it in case you accidentally spill or scatter toner.
- To prevent damage to the printer from static electricity, DO NOT touch the electrodes shown in the illustration.

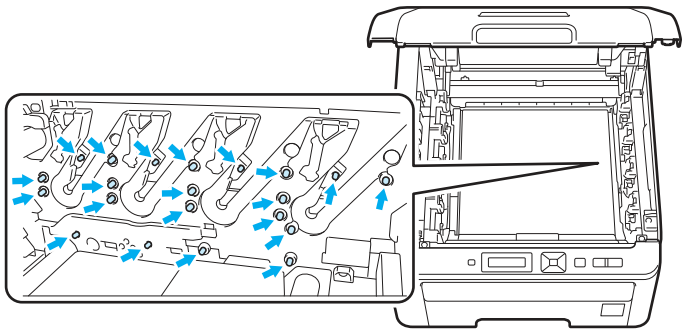

- Handle the toner cartridge carefully. If toner scatters on your hands or clothes, wipe or wash it off with cold water at once.
- To avoid print quality problems, DO NOT touch the shaded parts shown in the illustrations.

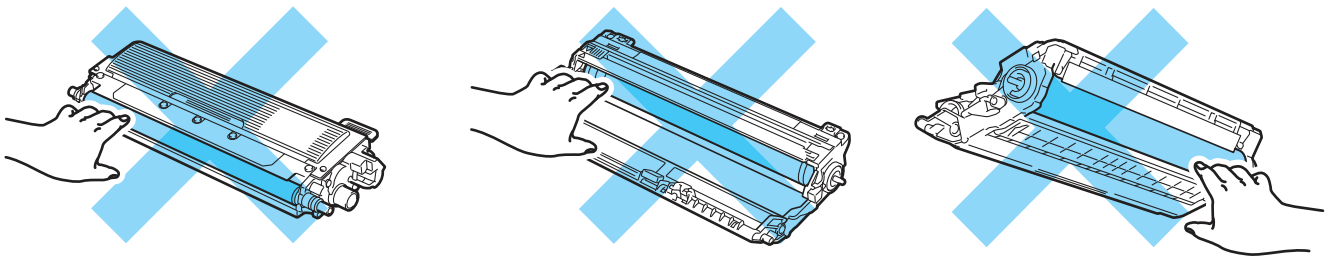

Note

- Be sure to seal up the toner cartridge tightly in a suitable bag so that toner powder does not spill out of the cartridge.
- Go to http://www.brother-usa.com/environment/ for instructions on how to return the used toner cartridge to the brother collection program. If you choose not to return your used toner cartridge, please discard the used toner cartridge according to local regulations, keeping it separate from domestic waste. If you have questions, call your local waste disposal office.

4 Clean the primary corona wire inside the drum unit by gently sliding the green tab from left to right and right to left several times.

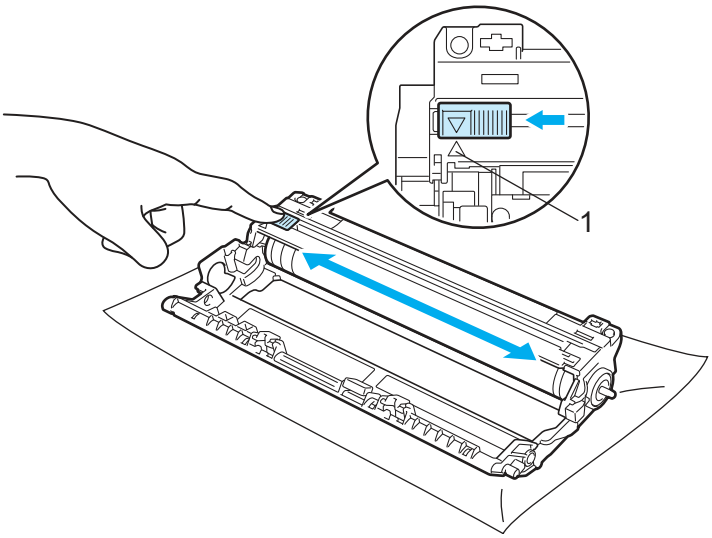

Note

Be sure to return the tab to the home position (▲) (1). If you do not, printed pages may have a vertical stripe.

5 Unpack the new toner cartridge. Gently shake it from side to side several times to distribute the toner evenly inside the cartridge.

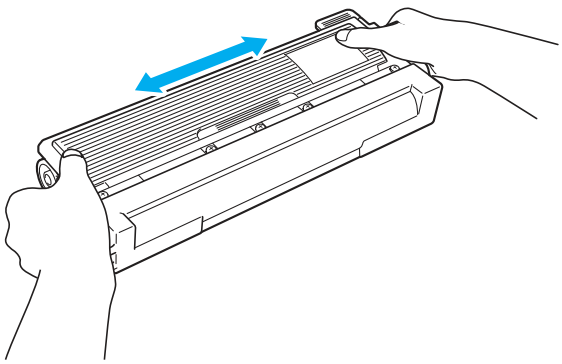

IMPORTANT

- Wait to unpack the toner cartridge until immediately before you put it in the printer. If toner cartridges are left unpacked for a long time the toner life will be shortened.
- If an unpacked drum unit is put in direct sunlight or room light, the unit may be damaged.

CAUTION

Put the toner cartridge in the drum unit immediately after you have removed the protective cover. To prevent any degradation to the print quality, DO NOT touch the shaded parts shown in the illustrations.

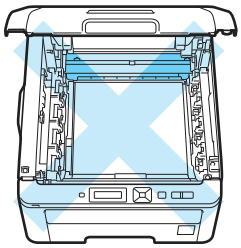

Inside the printer
(Top View)

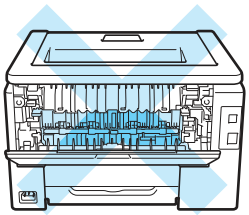

Inside the printer
(Back View)

IMPORTANT

For USA and Canada

Brother strongly recommends that you do not refill the toner cartridge provided with your printer. We also strongly recommend that you continue to use only genuine Brother brand replacement toner cartridges. Use or attempted use of potentially incompatible toner and/or cartridges in the Brother machine may cause damage to the machine and/or may result in unsatisfactory print quality. Our warranty coverage does not apply to any problem that is caused by the use of unauthorized third party toner and/or cartridges. To protect your investment and obtain premium performance from the Brother machine, we strongly recommend the use of genuine Brother supplies.

IMPORTANT

For UK and other countries

Brother machines are designed to work with toner of a particular specification and will work to a level of optimum performance when used with genuine Brother branded toner cartridges. Brother cannot guarantee this optimum performance if toner or toner cartridges of other specifications are used. Brother does not therefore recommend the use of cartridges other than genuine Brother branded cartridges with this machine.

If damage is caused to the drum unit or other part of this machine as a result of using other manufacturer’s products with this machine, any repairs required as a result may not be covered by the warranty.

6 Pull off the protective cover.

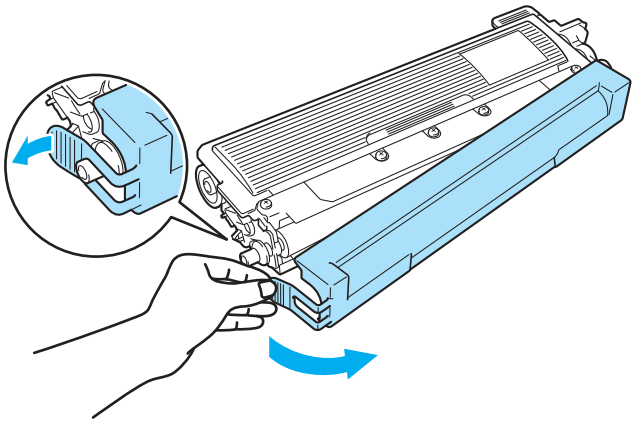

7 Put the new toner cartridge firmly into the drum unit until you hear it lock into place.

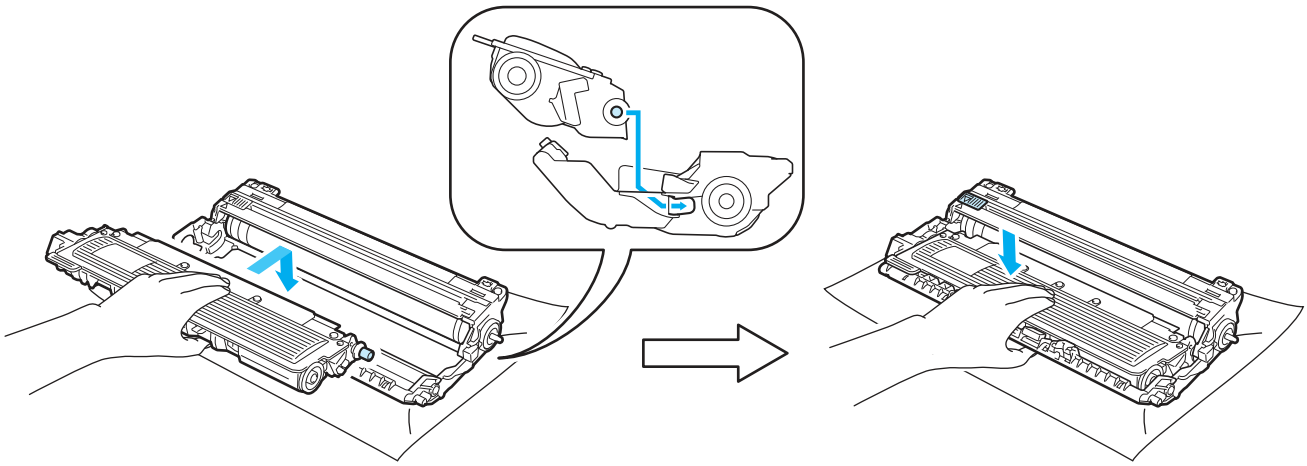

Note

Make sure that you put in the toner cartridge properly or it may separate from the drum unit.

8 Slide the drum unit and toner cartridge assembly into the printer. Make sure that you match the toner cartridge color to the same color label on the printer.

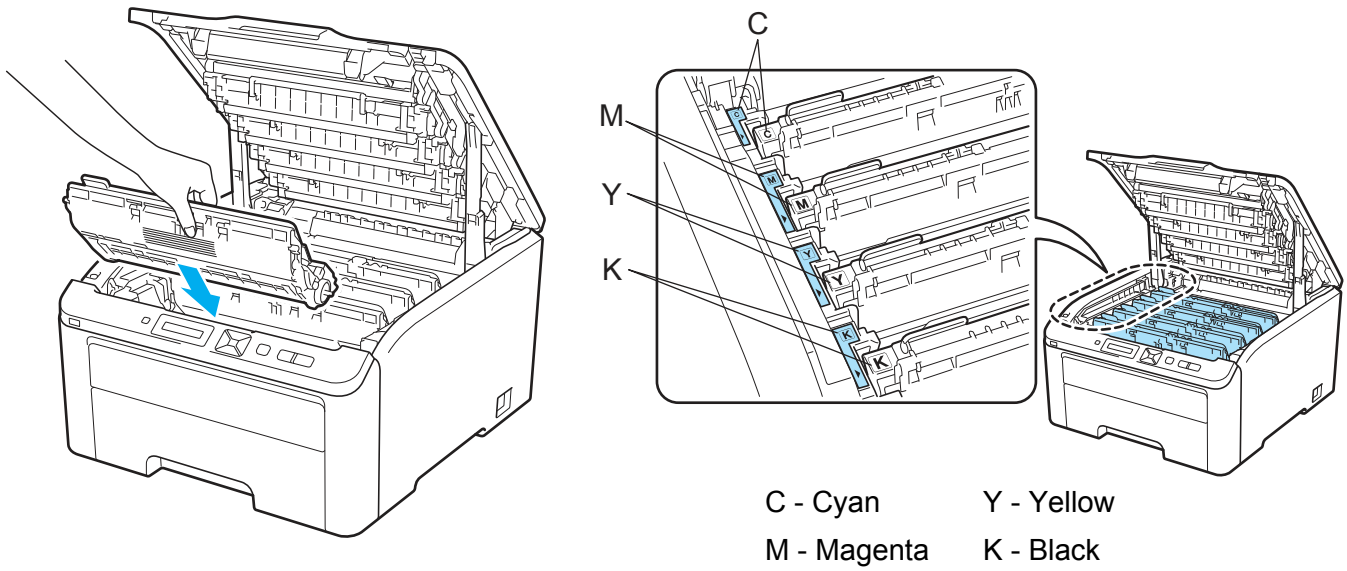

9 Close the top cover of the printer.

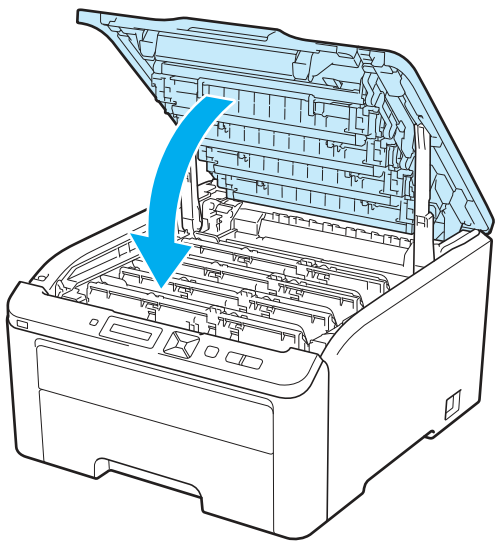

10 Turn the printer power switch back on.

Note

DO NOT turn off the printer power switch or open the top cover until the LCD shows `Ready`.

Drum units

Order No. DR-210CL 4 pc. Drum Set or single drums DR-210CL-BK, DR-210CL-CMY

A new drum unit can print approximately 15,000 A4 or Letter size single-sided pages.
DR-210CL Drum Set contains 4 drum units 1 Black (DR-210CL-BK) and 3 Color (DR-210CL-CMY).
DR-210CL-BK contains 1 Black drum. DR-210CL-CMY contains 1 Color drum.

Drum wear and tear occurs due to use and rotation of the drum and interaction with paper, toner and other materials in the paper path. In designing this product, Brother decided to use the number of rotations of the drum as a reasonable determinant of the drum life. When a drum reaches the factory-established rotation limit corresponding the rated page yield, the product LCD display will advise you to replace the applicable drum(s). The product will continue to function, however, print quality may not be optimal.

As the drums rotate in unison during the various stages of operation (regardless of whether toner is deposited on the page) and because damage to a single drum unit is not likely, you will need to replace all of the drums at once (unless you have replaced an individual drum [DR-210CL-BK for black and DR-210CL-CMY for Color] for reasons other than reaching its rated life). For your convenience, Brother sells the drum units as a set of four (DR-210CL).

Note

- There are many factors that determine the actual drum life, such as the temperature, humidity, type of paper, type of toner used and so on. Under ideal conditions, the average drum life is estimated at approximately 15,000 pages. The actual number of pages that your drum will print may be significantly less than this estimate. Because we have no control over the many factors that determine the actual drum life, we cannot guarantee a minimum number of pages that will be printed by your drum.
- For best performance, use only genuine Brother toner. The printer should be used only in a clean, dust-free environment with adequate ventilation.
- Printing with a third-party drum unit may reduce not only the print quality but also the quality and life of the printer itself. Warranty coverage does not apply to problems caused by the use of a third-party drum unit.

Drum End Soon messages

`Drums End Soon`

If the LCD shows `Drums End Soon`, it means the 4 drum units are near the end of their life. Buy a new drum unit set (DR-210CL) and have it ready before you get a `Replace Drums` message. To replace the drum units, see *Replacing the drum units* on page 112.

`Drum End Soon(X)`

If only a specified drum is near the end of its life, the LCD shows the `Drum End Soon(X)` message. (X) indicates the drum unit color that is near the end of its life. ((K) =Black, (Y)=Yellow, (M)=Magenta, (C)=Cyan). Buy a new drum unit DR-210CL-BK (for Black) or a DR-210CL-CMY (for either Y, M, C colors) and have it ready before you get a `Replace Drums` message. To replace the drum units, see *Replacing the drum units* on page 112.

The `Drum End Soon(X)` message appears for one minute after each print job.

Replace Drum messages

When the following message appears on the LCD, you need to replace the drum units:

```
Replace Drums
```

If only the specified drum needs to be replaced, the LCD shows the `Replace Drum(X)` message. (X) indicates the drum unit color that you need to replace. ((K)=Black, (Y)=Yellow, (M)=Magenta, (C)=Cyan).

```
Drum Error
```

<Scrolling message> `Replace the Drum Unit. Black (K)/ Cyan (C)/ Magenta (M)/ Yellow (Y). Refer to the User's Guide.` [1]

[1] Only the color you need to replace will be shown.

The `Drum Error` message has two cases: If the scrolling message shows `Replace the Drum Unit.` you will need to replace the drum unit. If the scrolling message shows `Slide the Green tab on Drum Unit.` you do not need to replace the drum unit, you just need to clean the corona wires. (See *Cleaning the corona wires* on page 130.)

Replacing the drum units

IMPORTANT

- While removing the drum unit, handle it carefully because it may contain toner.
- We recommend that you clean the printer when you replace the drum unit. See *Cleaning* on page 127.

1. Turn off the printer power switch. Fully open the top cover by lifting up on the handle (1).

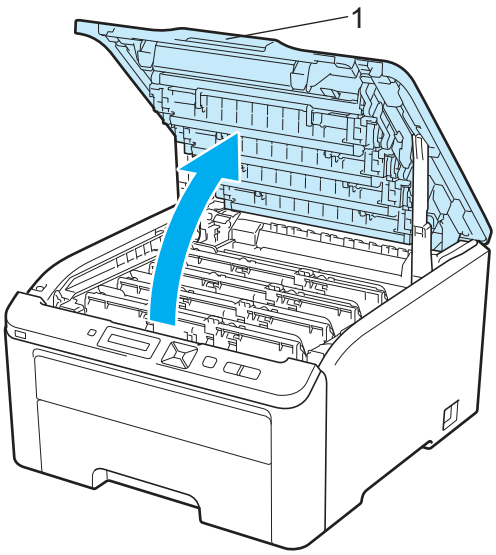

2 Take out the drum unit and toner cartridge assembly for the color shown on the LCD.

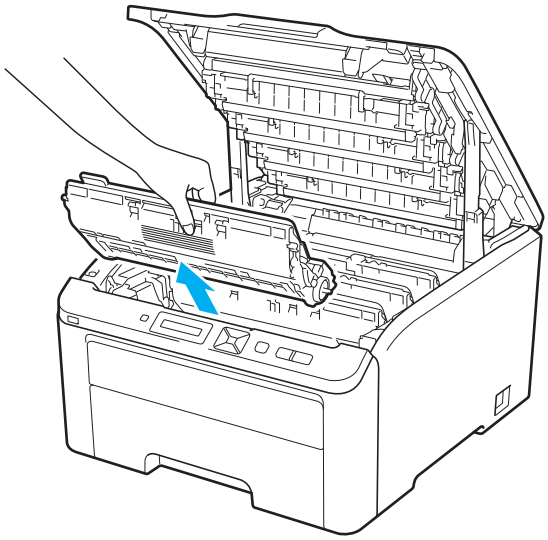

3 Push down the green-labeled lock lever (1) and take the toner cartridge out of the drum unit.

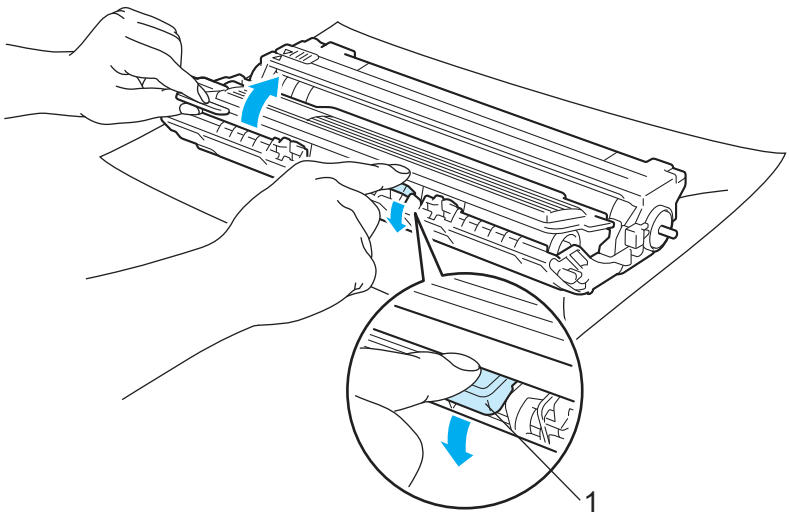

WARNING

DO NOT put a toner cartridge into a fire. It could explode, resulting in injuries.

DO NOT use cleaning materials that contain ammonia, alcohol, any type of spray, or any type of flammable substance to clean the outside or inside of the machine. Doing this may cause a fire or electrical shock. See *Cleaning* on page 127 for how to clean the printer.

Be careful not to inhale toner.

IMPORTANT

- We recommend that you place the drum unit and toner cartridge assembly on a clean, flat surface with a sheet of disposable paper or cloth underneath it in case you accidentally spill or scatter toner.
- To prevent damage to the printer from static electricity, DO NOT touch the electrodes shown in the illustration.

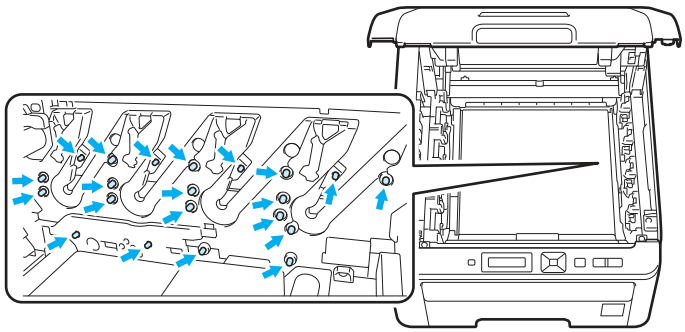

- Handle the toner cartridge carefully. If toner scatters on your hands or clothes, wipe or wash it off with cold water at once.
- To avoid print quality problems, DO NOT touch the shaded parts shown in the illustrations.

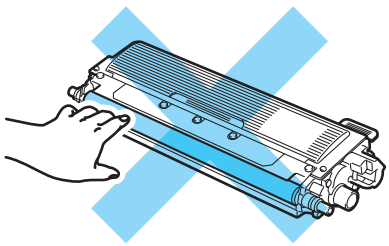

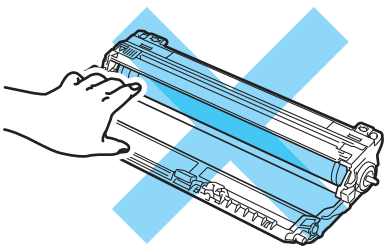

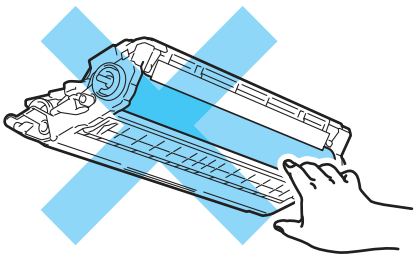

Note

- Be sure to seal up the drum unit tightly in a suitable bag so that toner powder does not spill out of the cartridge.
- Go to http://www.brother-usa.com/environment/ for instructions on how to return the used toner cartridge to the brother collection program. If you choose not to return your used toner cartridge, please discard the used toner cartridge according to local regulations, keeping it separate from domestic waste. If you have questions, call your local waste disposal office.

4 Unpack the new drum unit and pull off the protective cover.

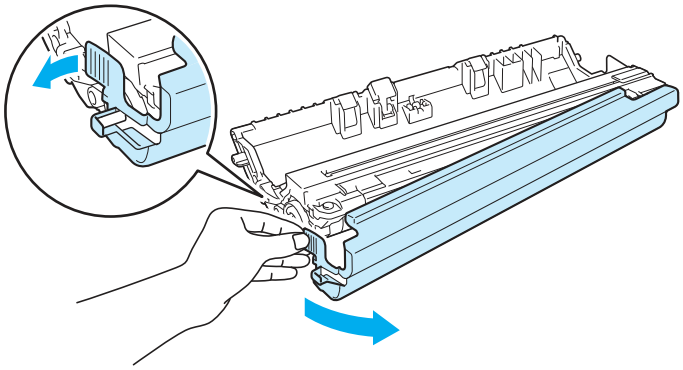

IMPORTANT

Wait to unpack a drum unit until immediately before you put it in the printer. Exposure to direct sunlight or room light may damage the drum unit.

5 Put the toner cartridge firmly into the new drum unit until you hear it lock into place.

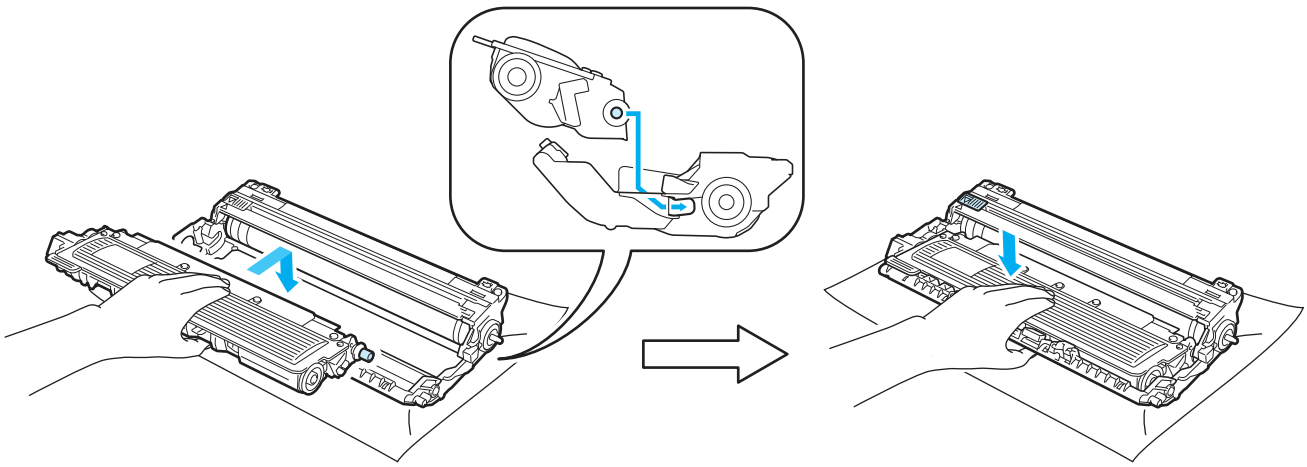

IMPORTANT

Make sure that you re-install the toner cartridge properly, or it may separate from the drum unit.

6 Slide the drum unit and toner cartridge assembly into the printer. Make sure that you match the toner cartridge color to the same color label on the printer.

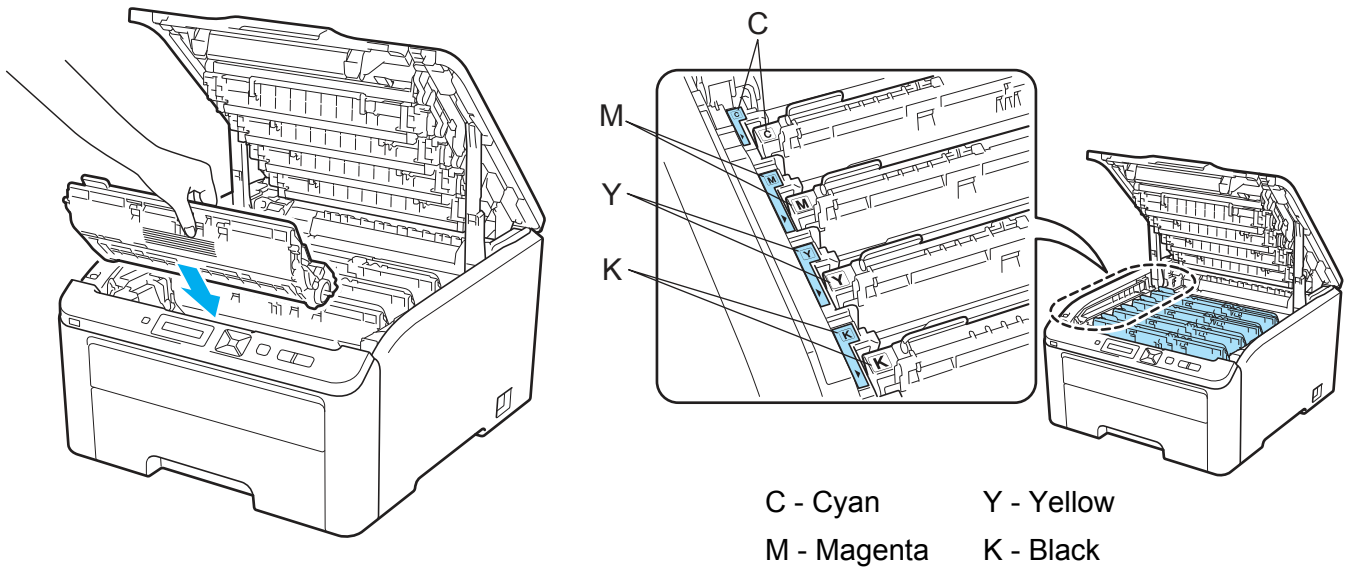

7 Close the top cover of the printer.

When you replace a drum unit with a new one, you need to reset the drum counter by completing the following steps:

1 Turn the printer power switch back on.

2 Press **+** or **-** to choose `Machine Info.`.

3 Press **OK** to proceed to the next menu level, and then press **+** or **-** to choose `Reset Parts Life`.

4 Press **OK**, and then press **+** to choose `Drum Unit`.

5 Press **OK**, and then press **+** or **-** to choose the color that you replaced.

6 Press **OK** two times.

Belt unit

Order No. BU-200CL

A new belt unit can print approximately 50,000 A4 or Letter size single-sided pages.

Belt End Soon message

```
Belt End Soon
```

If the LCD shows `Belt End Soon`, it means the belt unit is near the end of its life. Buy a new belt unit and have it ready before you get a `Replace Belt` message. To replace the belt unit, see *Replacing the belt unit* on page 117.

Replace Belt message

When the following message appears on the LCD, you need to replace the belt unit:

```
Replace Belt
```

IMPORTANT

- DO NOT touch the surface of the belt unit. If you touch it, it could degrade print quality.
- Damage caused by incorrect handling of the belt unit may void your warranty.

Replacing the belt unit

1. Turn off the printer power switch. Fully open the top cover by lifting up on the handle (1).

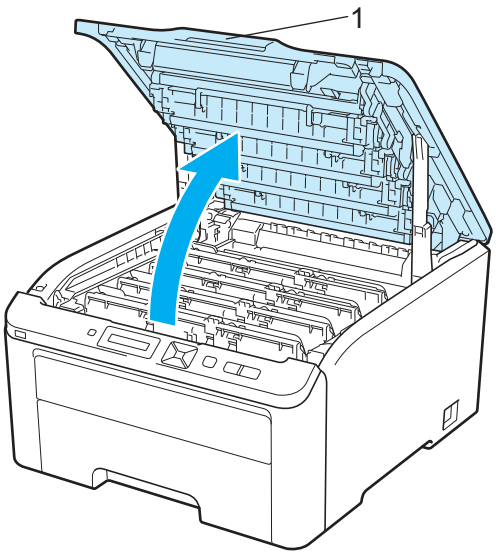

2 Take out all the drum unit and toner cartridge assemblies.

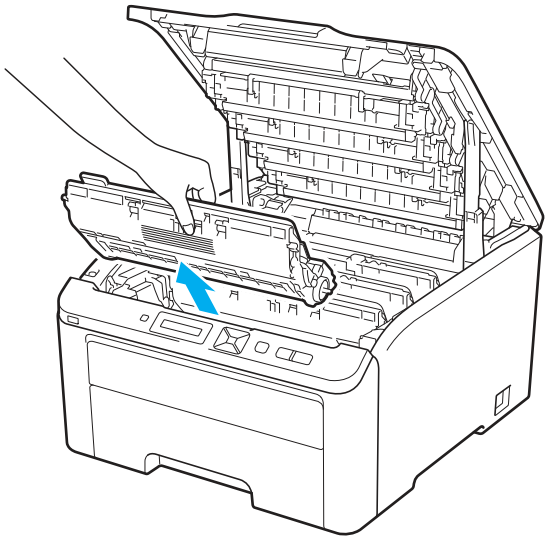

IMPORTANT

- We recommend that you place the drum unit and toner cartridge assembly on a clean, flat surface with a sheet of disposable paper or cloth underneath it in case you accidentally spill or scatter toner.
- To prevent damage to the printer from static electricity, DO NOT touch the electrodes shown in the illustration.

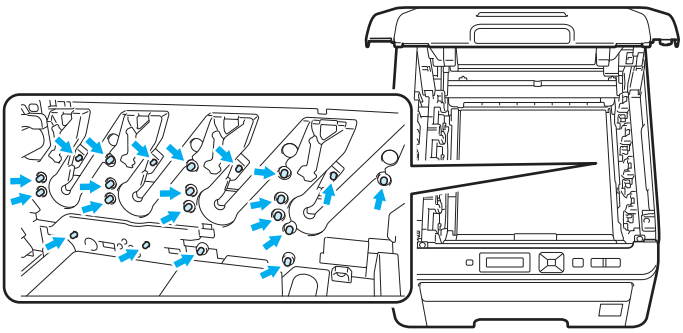

- Handle the toner cartridge carefully. If toner scatters on your hands or clothes, wipe or wash it off with cold water at once.
- To avoid print quality problems, DO NOT touch the shaded parts shown in the illustrations.

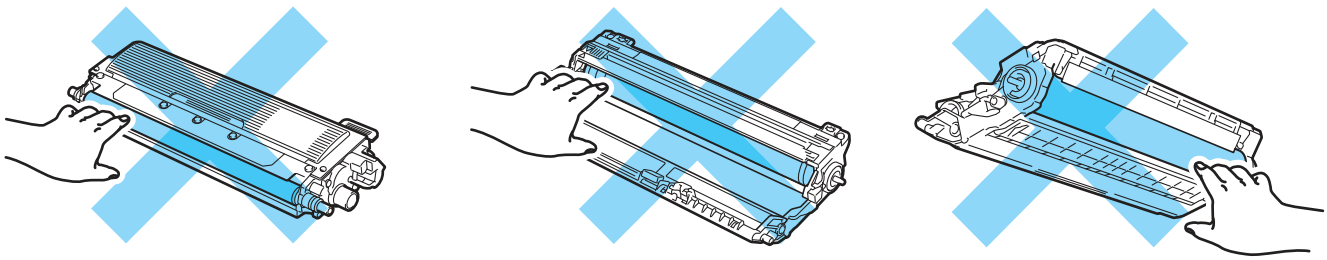

3 Hold the green handle of the belt unit and lift the belt unit up, then pull it out.

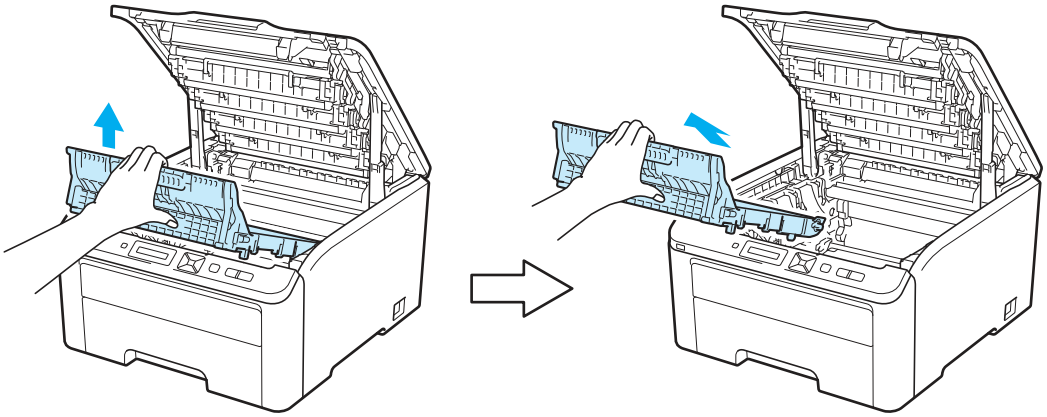

IMPORTANT

To avoid print quality problems, DO NOT touch the shaded parts shown in the illustrations.

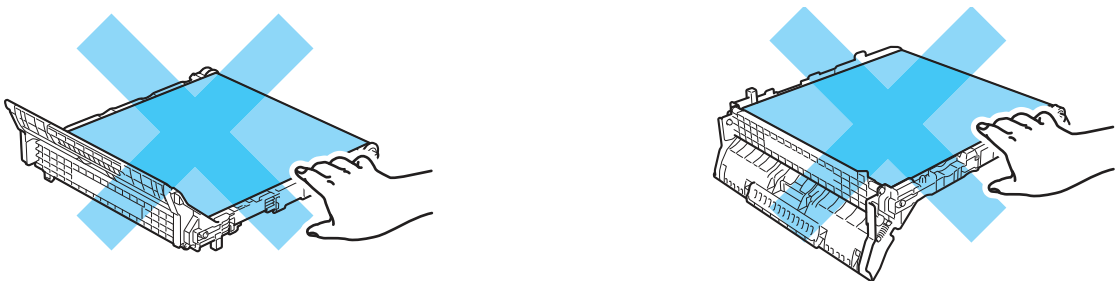

4 Unpack the new belt unit and put the new belt unit in the printer.

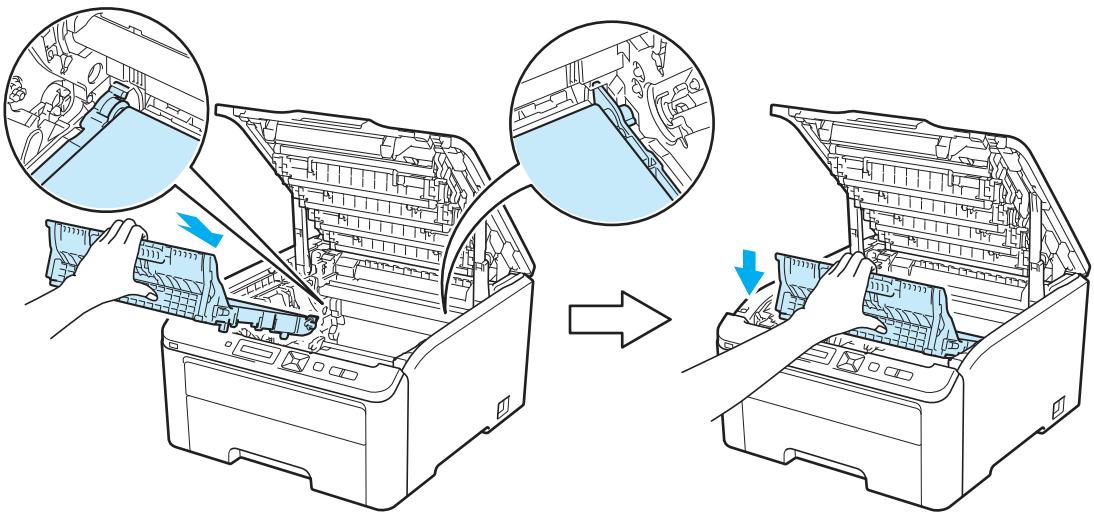

5 Slide each drum unit and toner cartridge assembly into the printer. Make sure that you match the toner cartridge color to the same color label on the printer. Repeat this for all the drum unit and toner cartridge assemblies.

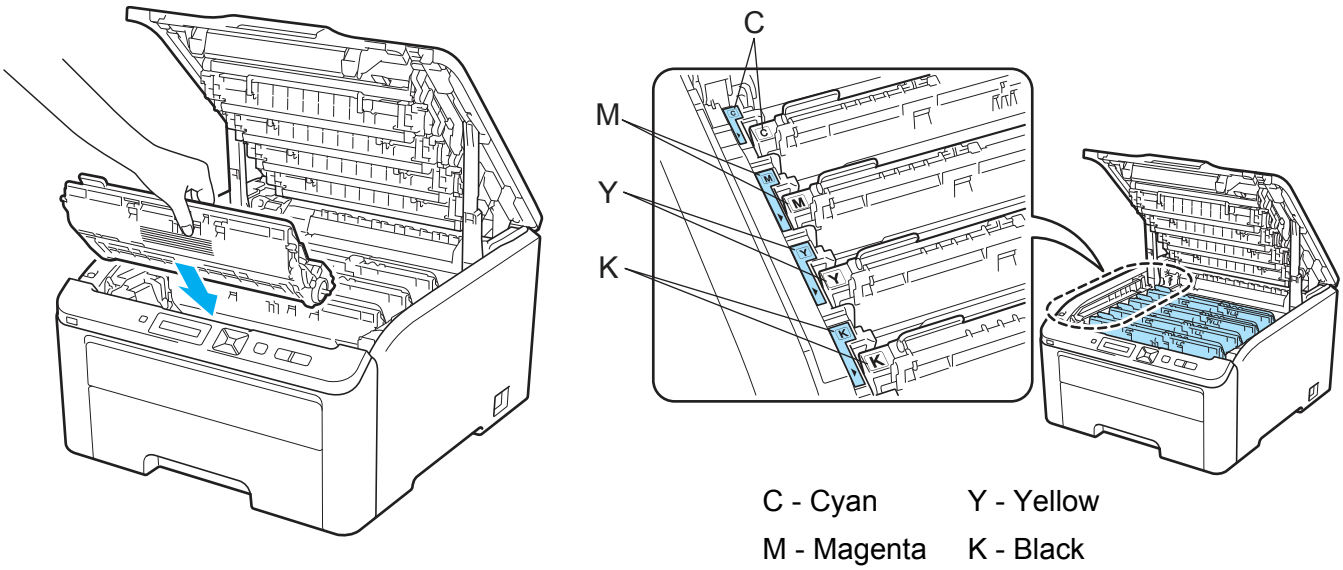

6 Close the top cover of the printer.

When you replace the belt unit with a new one, you need to reset the belt unit counter by completing the following steps:

1 Turn the printer power switch back on.

2 Press **+** or **-** to choose `Machine Info.`.

3 Press **OK** to proceed to the next menu level, and then press **+** or **-** to choose `Reset Parts Life`.

4 Press **OK**, and then press **+** to choose `Belt Unit`.

5 Press **OK** two times.

Waste toner box

Order No. WT-200CL

The life of a waste toner box is approximately 50,000 A4 or Letter size single-sided pages.

WT Box End Soon message

```
WT Box End Soon
```

If the LCD shows `WT Box End Soon`, it means the waste toner box is near the end of its life. Buy a new waste toner box and have it ready before you get a `Replace WT Box` message. To replace the waste toner box, see *Replacing the waste toner box* on page 122.

Replace WT Box message

When the following message appears on the LCD, you need to replace the waste toner box:

```
Replace WT Box
```

IMPORTANT

DO NOT reuse the waste toner box.

WARNING

DO NOT put the waste toner box into a fire. It could explode.

Be careful not to spill the toner. DO NOT inhale or allow it to get into your eyes.

Replacing the waste toner box

1. Turn off the printer power switch. Fully open the top cover by lifting up on the handle (1).

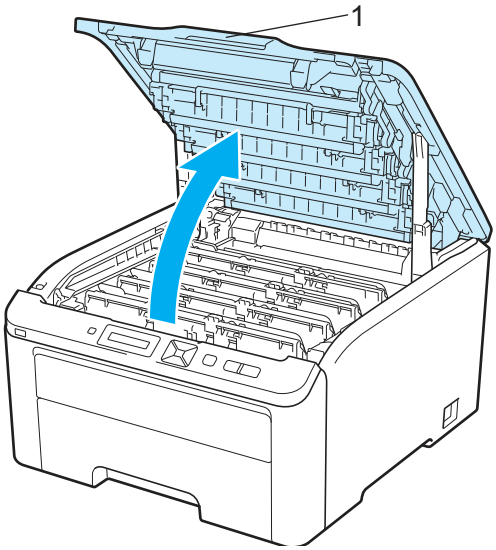

2. Take out all the drum unit and toner cartridge assemblies.

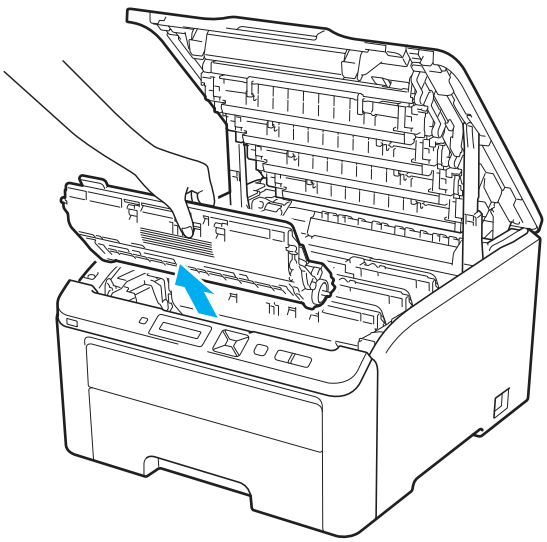

IMPORTANT

- We recommend that you place the drum unit and toner cartridge assembly on a clean, flat surface with a sheet of disposable paper or cloth underneath it in case you accidentally spill or scatter toner.
- To prevent damage to the printer from static electricity, DO NOT touch the electrodes shown in the illustration.

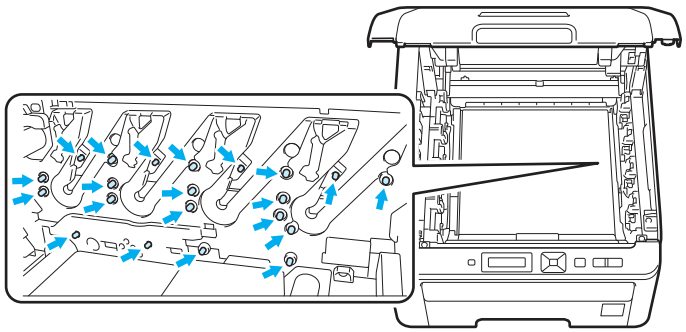

- Handle the toner cartridge carefully. If toner scatters on your hands or clothes, wipe or wash it off with cold water at once.
- To avoid print quality problems, DO NOT touch the shaded parts shown in the illustrations.

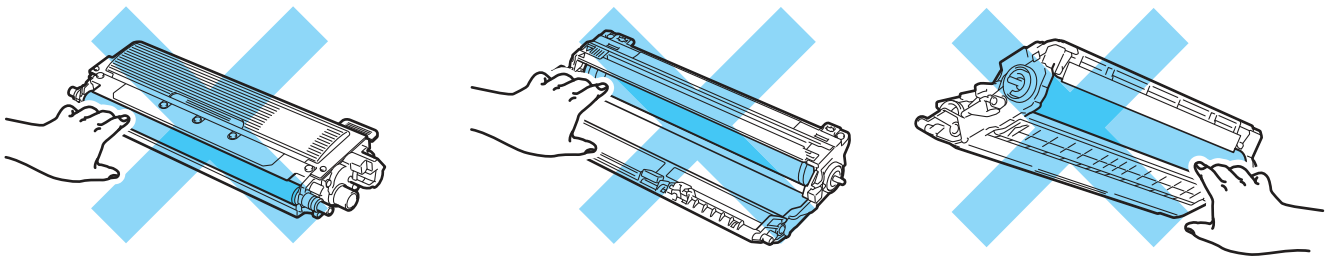

3 Hold the green handle of the belt unit and lift the belt unit up, then pull it out.

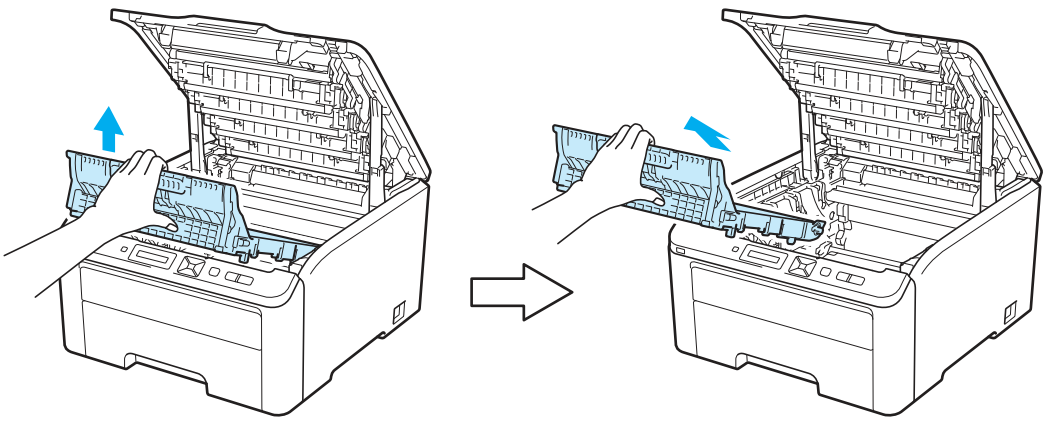

IMPORTANT

To avoid print quality problems, DO NOT touch the shaded parts shown in the illustrations.

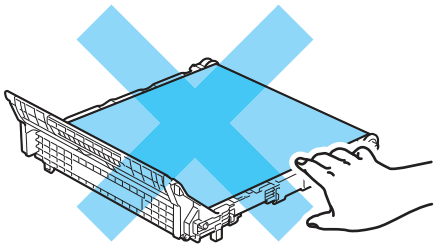

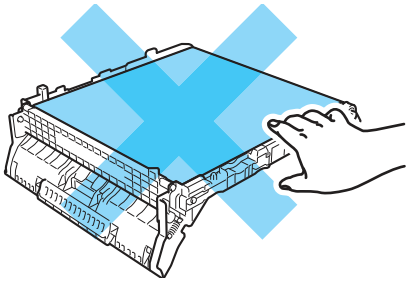

4 Remove the orange packing material and discard it.

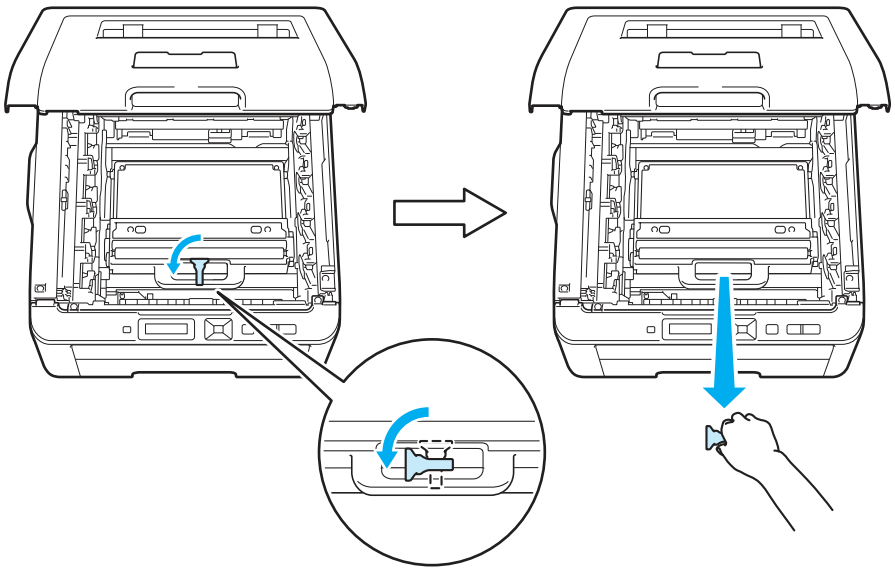

Note

This step is only necessary when you are replacing the waste toner box for the first time. The orange packing is installed at the factory to protect your machine during shipment. The orange packing is not required for replacement waste toner boxes.

5 Hold the green handle of the waste toner box and remove the waste toner box from the printer.

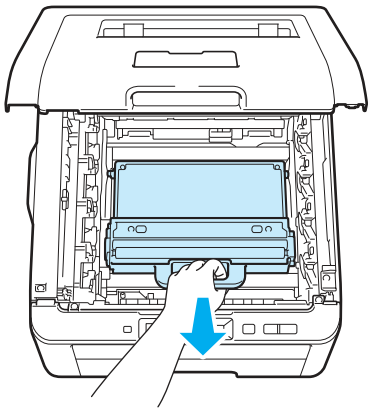

IMPORTANT

Handle the waste toner box carefully. If toner scatters on your hands or clothes, wipe or wash it off with cold water at once.

Note

Discard the used waste toner box according to local regulations, keeping it separate from domestic waste. If you have questions, call your local waste disposal office.

6 Unpack the new waste toner box and put the new waste toner box in the printer.

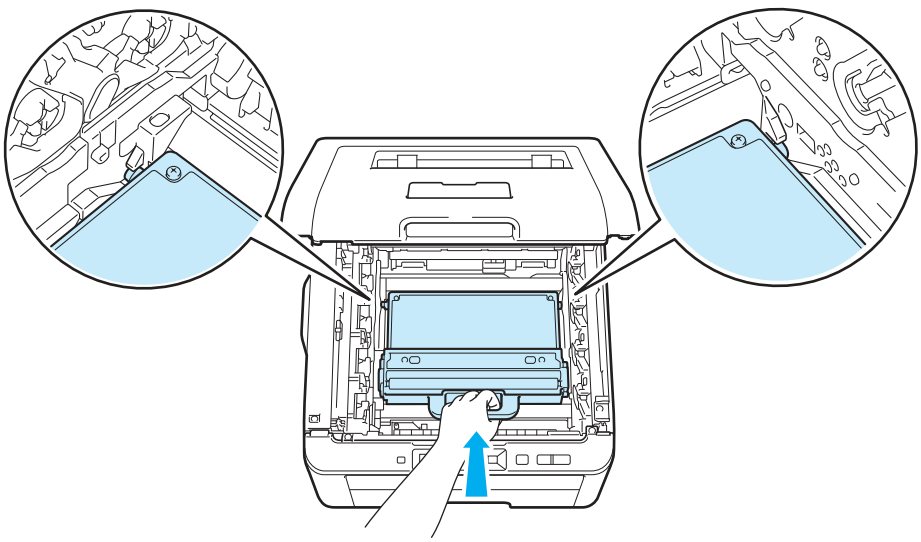

7 Put the belt unit back in the printer.

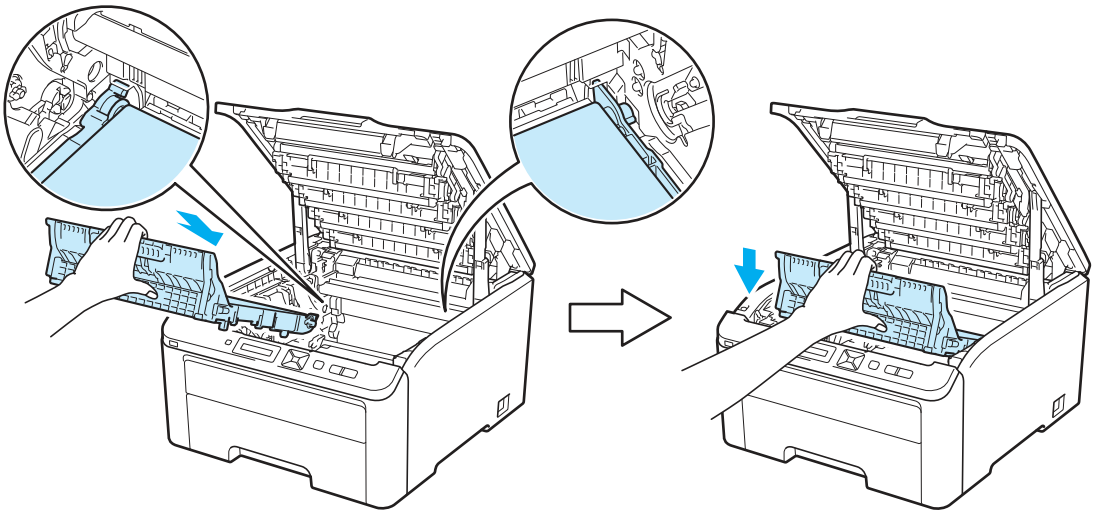

8 Slide each drum unit and toner cartridge assembly into the printer. Make sure that you match the toner cartridge color to the same color label on the printer. Repeat this for all the drum unit and toner cartridge assemblies.

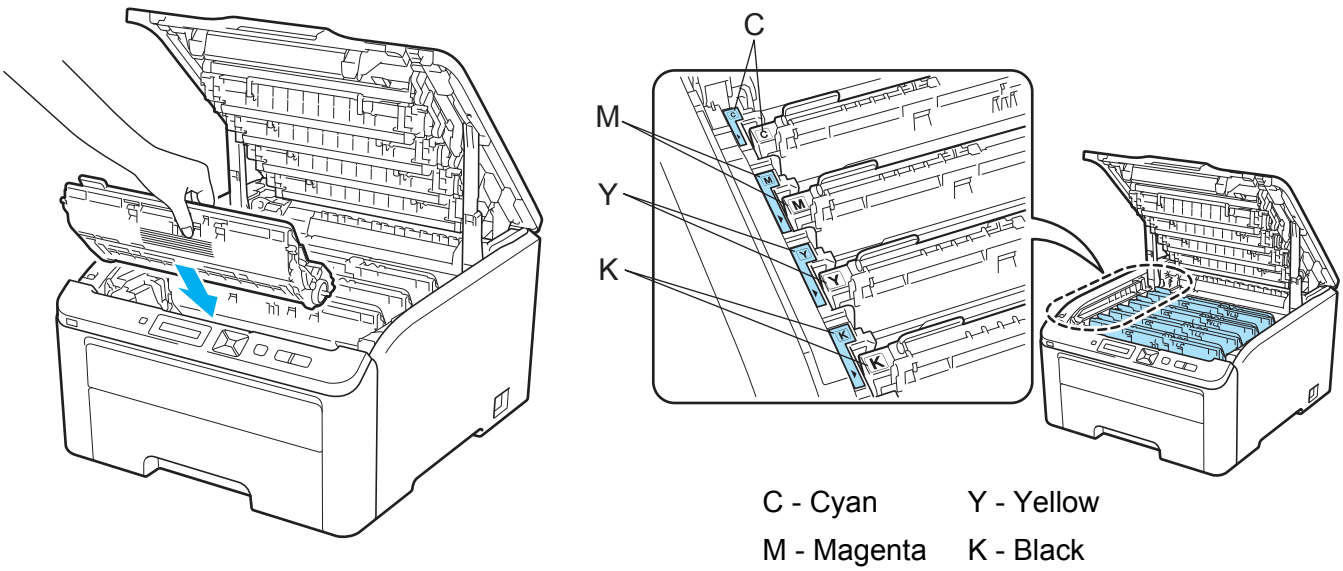

9 Close the top cover of the printer.

10 Turn the printer power switch back on.

Cleaning

Clean the outside and inside of the printer regularly with a dry, lint-free cloth. When you replace the toner cartridge or the drum unit, make sure that you clean the inside of the printer. If printed pages are stained with toner, clean the inside of the printer with a dry, lint-free cloth.

WARNING

DO NOT use cleaning materials that contain ammonia, alcohol, any type of spray, or any type of flammable substance to clean the outside or inside of the machine. Doing this may cause a fire or electrical shock. See *Cleaning* on page 127 for how to clean the printer.

Be careful not to inhale toner.

IMPORTANT

Use neutral detergents. Cleaning with volatile liquids such as thinner or benzine will damage the surface of the printer.

Cleaning the outside of the printer

1. Turn off the printer power switch and then unplug the printer.

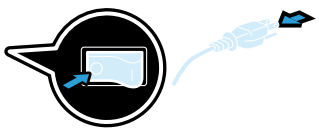

2 Pull the paper tray completely out of the printer.

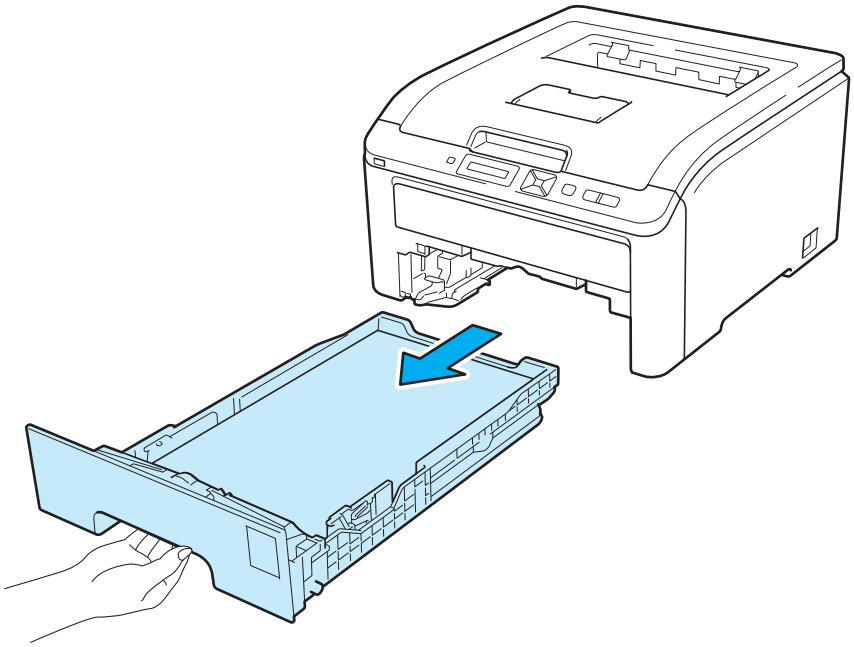

3 Wipe the outside of the printer with a dry, lint-free cloth to remove dust.

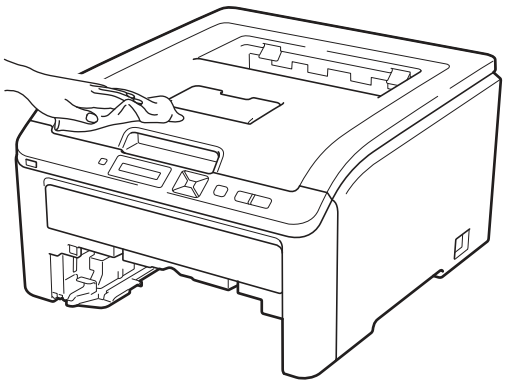

4 Remove anything that is stuck inside the paper tray.

5 Wipe the inside of the paper tray with a dry, lint-free cloth to remove dust.

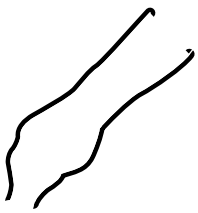

6 Put the paper tray back in the printer.

7 Plug the printer back in, and then turn on the power switch.

Cleaning the LED head

1 Turn off the printer power switch and then unplug the printer.

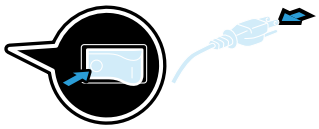

2 Fully open the top cover by lifting up on the handle (1).

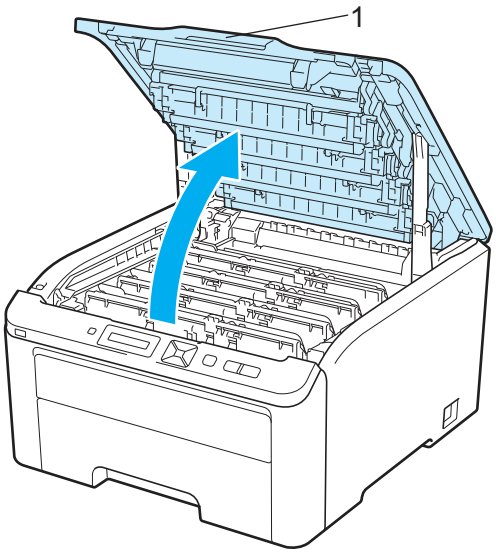

3 Wipe the windows of LED head (1) with a dry, lint-free cloth. Be careful not to touch the windows of LED head (1) with your fingers.

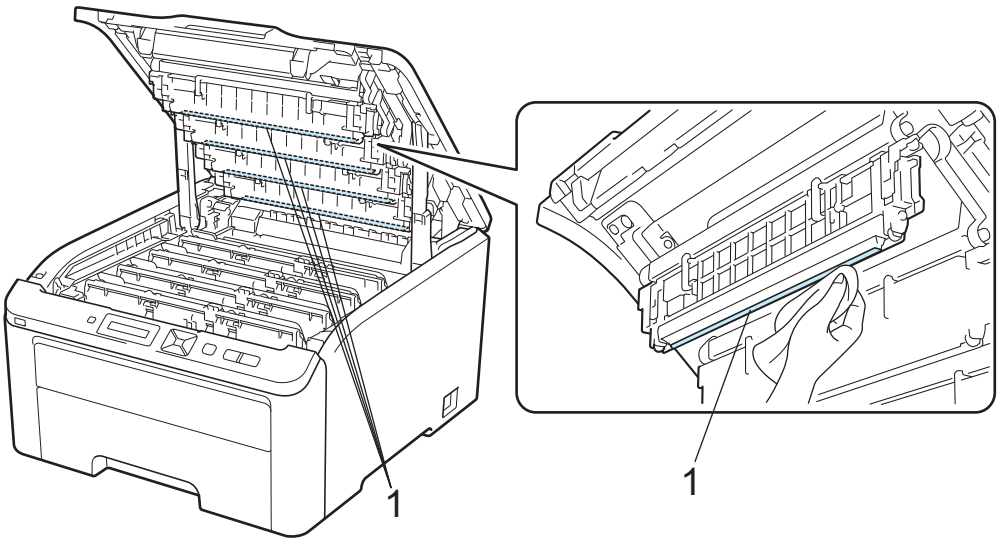

4 Close the top cover of the printer.

5 Plug the printer back in, and then turn on the power switch.

Cleaning the corona wires

If you have print quality problems, clean the corona wires as follows:

1 Turn off the printer power switch. Fully open the top cover by lifting up on the handle (1).

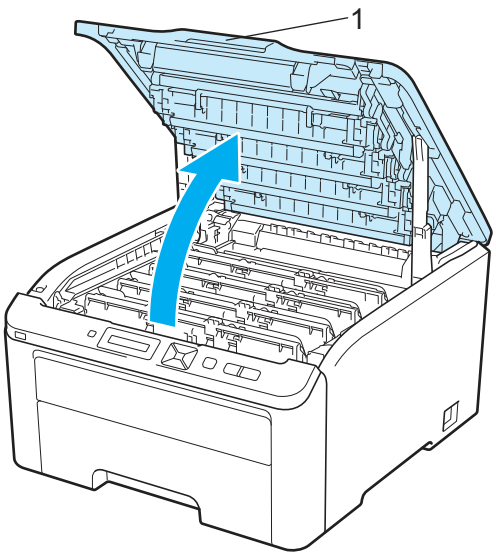

2 Take out a drum unit and toner cartridge assembly.

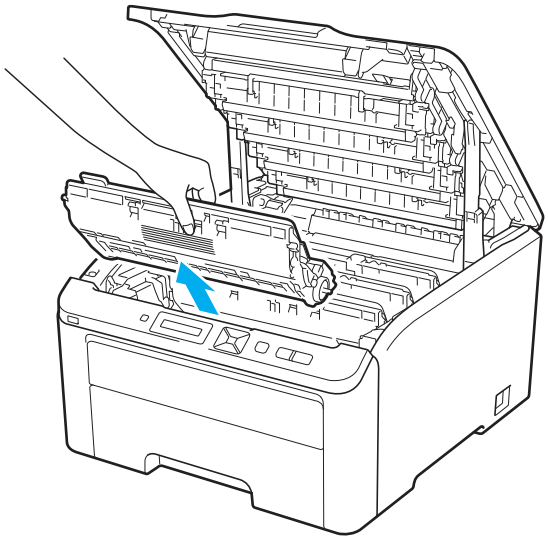

IMPORTANT

- We recommend that you place the drum unit and toner cartridge assembly on a clean, flat surface with a sheet of disposable paper or cloth underneath it in case you accidentally spill or scatter toner.
- To prevent damage to the printer from static electricity, DO NOT touch the electrodes shown in the illustration.

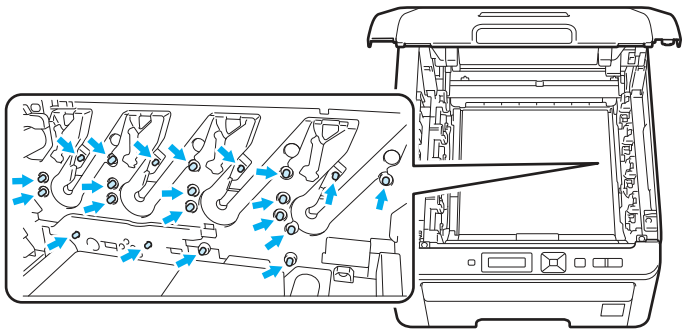

3 Clean the primary corona wire inside the drum unit by gently sliding the green tab from left to right and right to left several times.

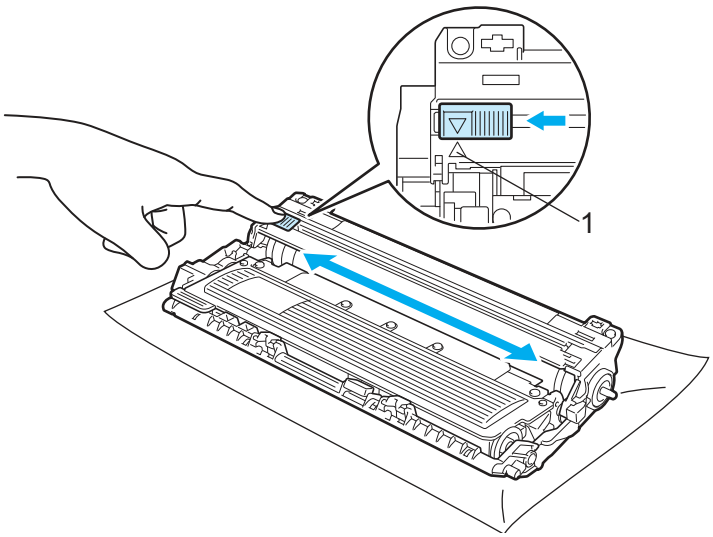

Note

Be sure to return the tab to the home position (▲) (1). If you do not, printed pages may have a vertical stripe.

4 Slide the drum unit and toner cartridge assembly into the printer. Make sure that you match the toner cartridge color to the same color label on the printer.

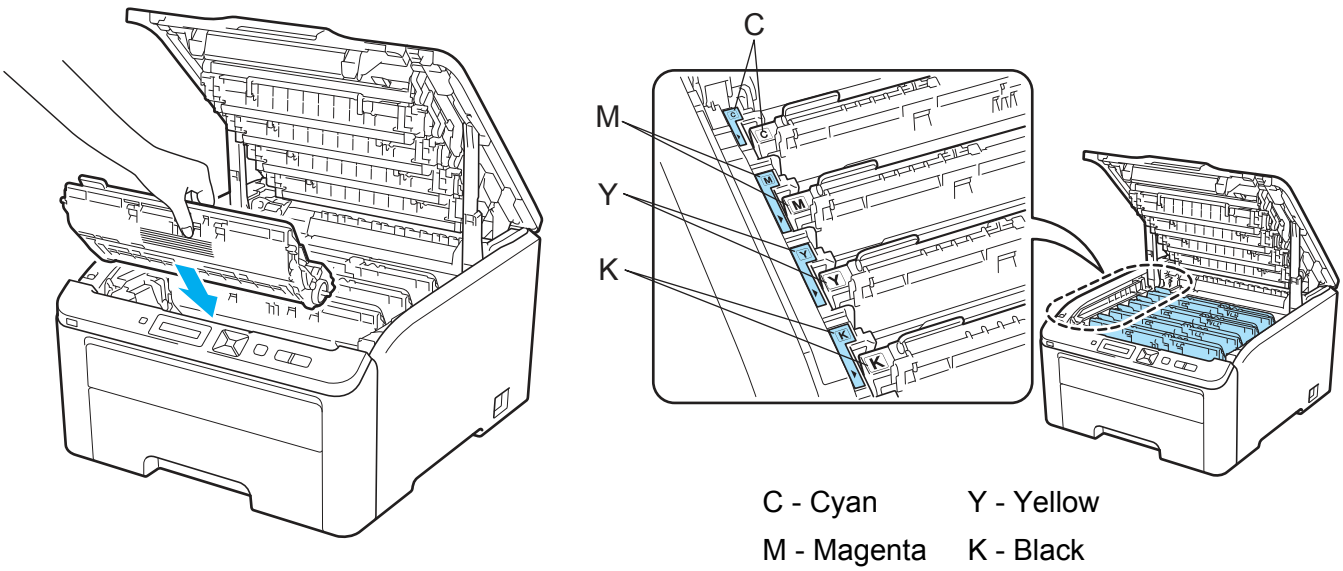

5 Repeat steps ❷ to ❹ to clean each of the remaining corona wires.

6 Close the top cover of the printer.

7 Turn the printer power switch back on.

Cleaning the drum unit

Small spots on the printed pages

If your printout has any small white or colored spots, follow the steps below to solve the problem.

1. Open the manual feed slot cover.

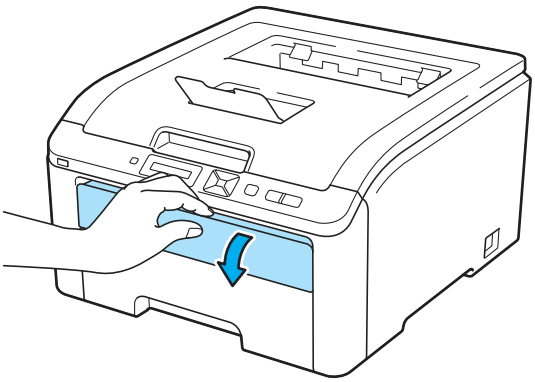

2. Using both hands, slide the manual feed slot paper guides to the width of the paper that you are going to use.

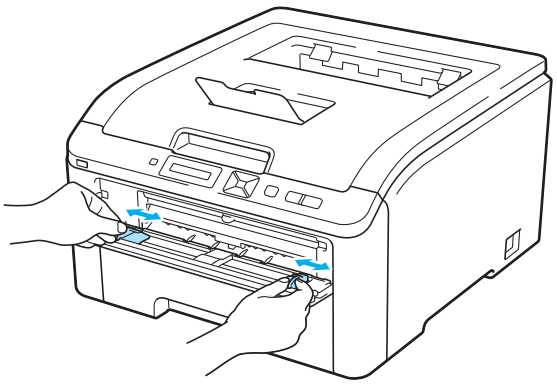

3. Using both hands, put one blank sheet of paper in the manual feed slot until the front edge of the paper touches the paper feed roller. Wait until the machine automatically feeds the paper. When you feel the machine pull in the paper, let go.

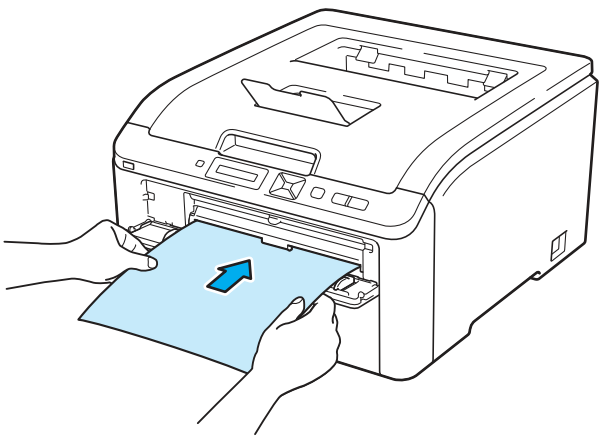

Note

- Make sure that the paper is straight and in the correct position on the manual feed slot. If it is not, the paper may not be fed properly, resulting in a skewed printout or a paper jam.
- Do not put more than one piece of paper in the manual feed slot at any one time, as it may cause a jam.
- If you put paper in the manual feed slot before the printer is in the Ready state, an error may occur and the printer will stop printing.

4. Make sure that the printer is in the Ready state. Press **+** or **-** to choose `Color Correction`. Press **OK**.

   `Select ▲▼ or OK`
   ↓
   `Color Correction`

5. Press **+** or **-** to choose `Drum Cleaning`.

   `Drum Cleaning`

6. Press **Go**. The printer will pull in the piece of paper and start cleaning the drum unit.

`Please Wait`

7. When the printer has finished cleaning, `Completed` appears on the LCD. Press **Cancel** so that the printer returns to the Ready state.

8. Repeat steps ❸ to ❼ two more times using a new blank sheet of paper each time. Upon completion please discard the used paper. If the print problem is not resolved please contact Brother Customer Service.

Large spots on the printed pages

If your printout has colored spots at 94 mm (3.7 in.) intervals, follow the steps below to solve the problem.

1. Turn off the printer power switch. Fully open the top cover by lifting up on the handle (1).

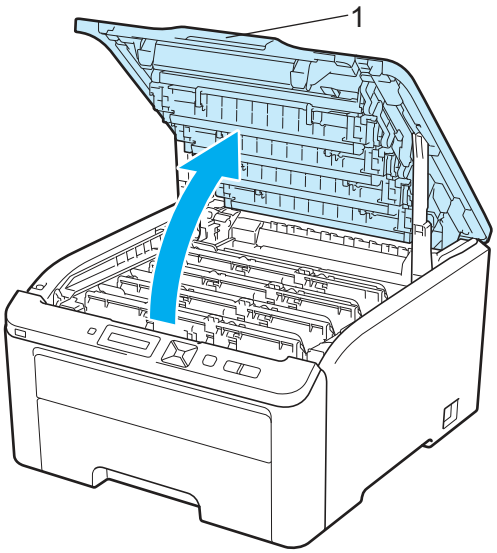

2. See the print sample to identify the color causing the problem. The color of the spots is the color of the drum you should clean. For example, if the spots are cyan, you should clean the drum for cyan. Take out the drum unit and toner cartridge assembly of the color causing the problem.

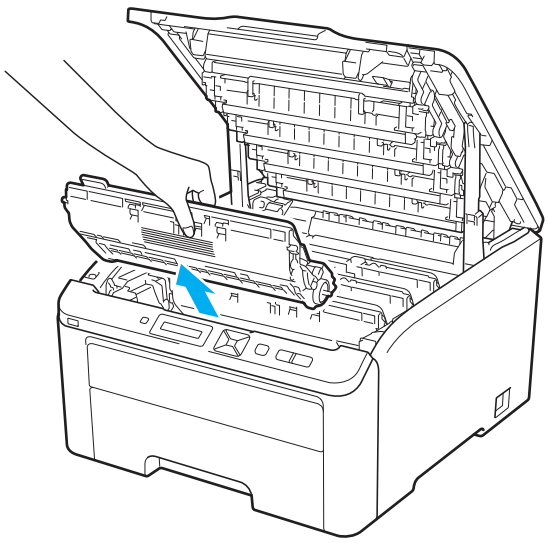

IMPORTANT

- We recommend that you place the drum unit and toner cartridge assembly on a clean, flat surface with a sheet of disposable paper or cloth underneath it in case you accidentally spill or scatter toner.
- To prevent damage to the printer from static electricity, DO NOT touch the electrodes shown in the illustration.

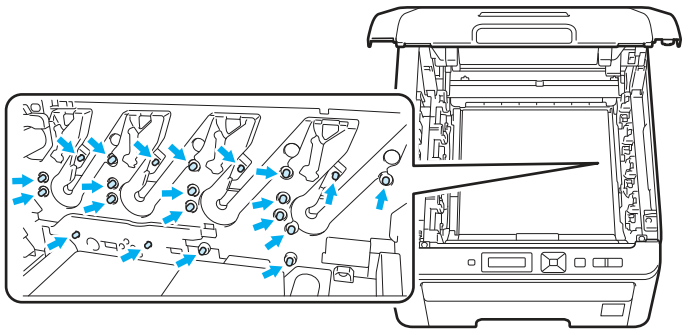

3 Push down the green-labeled lock lever (1) and take the toner cartridge out of the drum unit.

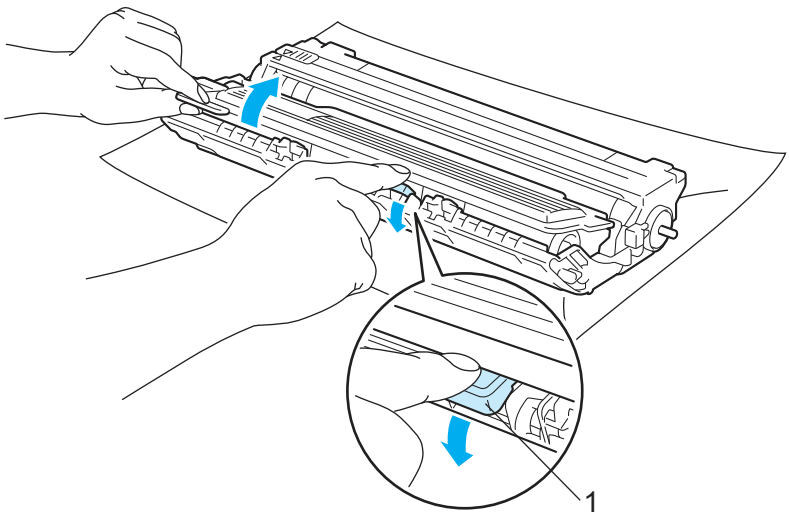

IMPORTANT

Handle the toner cartridge carefully. If toner scatters on your hands or clothes, wipe or wash it off with cold water at once.

4 Put the print sample in front of the drum unit, and find the exact position of the poor print.

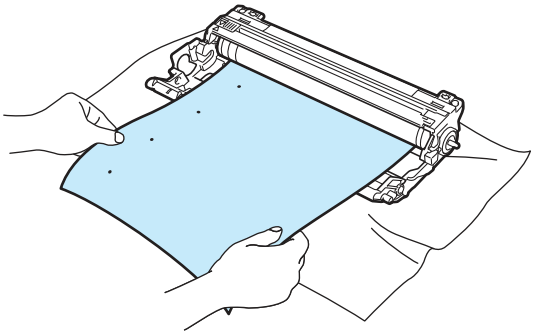

5 Turn the drum unit gear by hand while looking at the surface of the OPC drum (1).

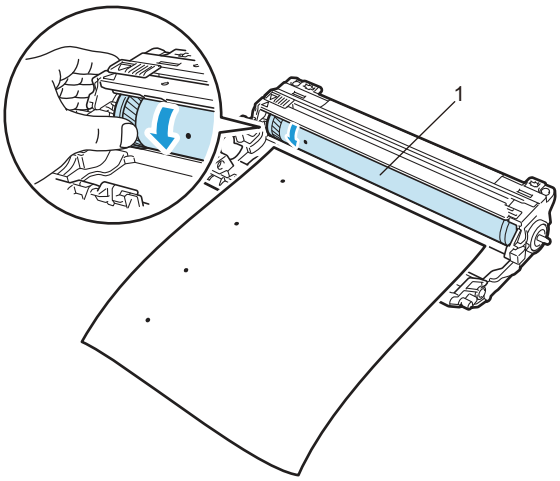

6 When you have found the mark on the drum that matches the print sample, wipe the surface of the OPC drum with a dry cotton swab until the dust or glue on the surface comes off.

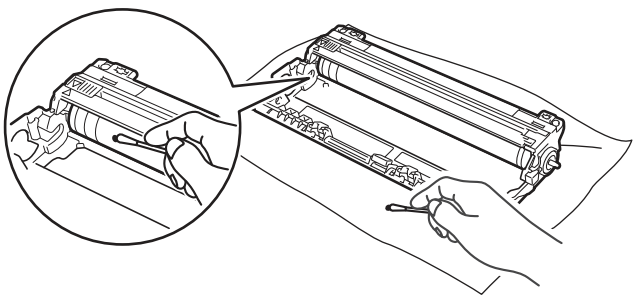

IMPORTANT

DO NOT clean the surface of the photosensitive drum with a sharp object.

7 Put the toner cartridge back firmly into the drum unit until you hear it lock into place.

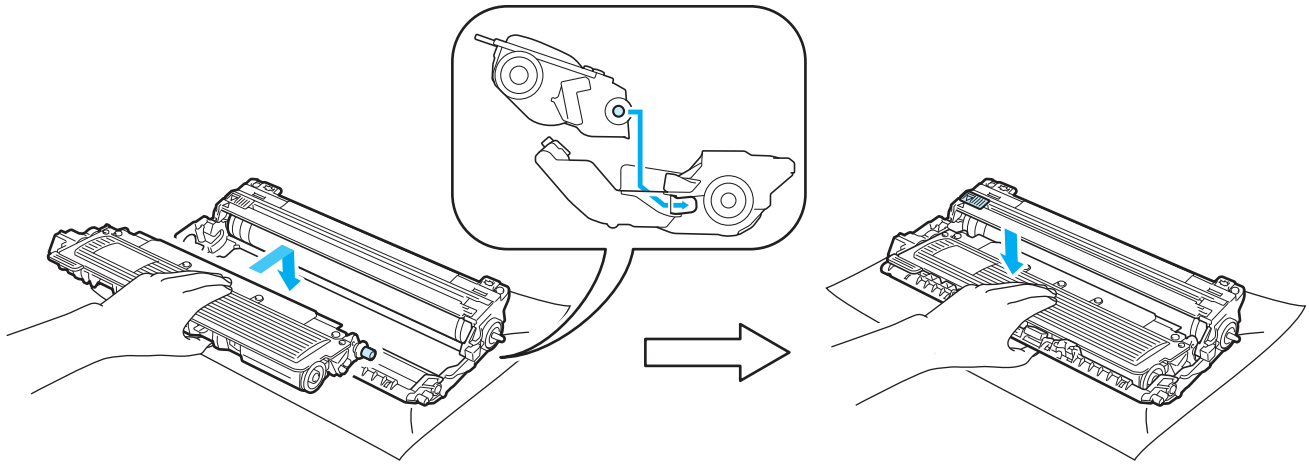

Note

Make sure that you put in the toner cartridge properly or it may separate from the drum unit.

8 Slide each drum unit and toner cartridge assembly into the printer. Make sure that you match the toner cartridge color to the same color label on the printer.

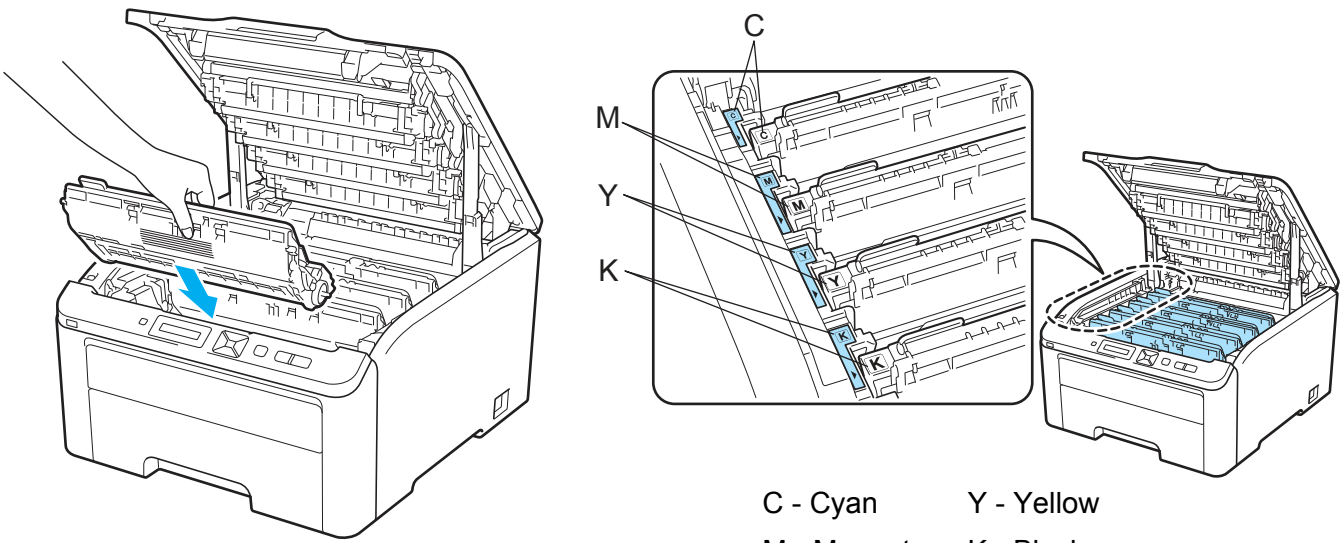

C - Cyan Y - Yellow
M - Magenta K - Black

9 Close the top cover of the printer.

10 Turn the printer power switch back on.

Cleaning the paper pick-up roller

1. Turn off the printer power switch and then unplug the printer.

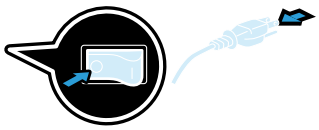

2. Pull the paper tray completely out of the printer.

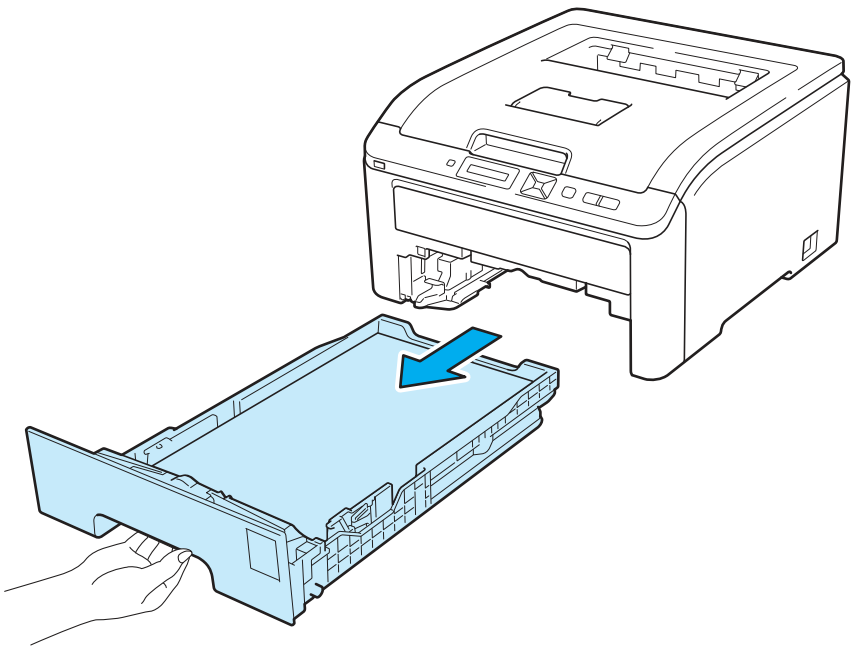

3 Tightly wring out a lint-free cloth soaked in lukewarm water, and then wipe the separator pad (1) of the paper tray with it to remove dust.

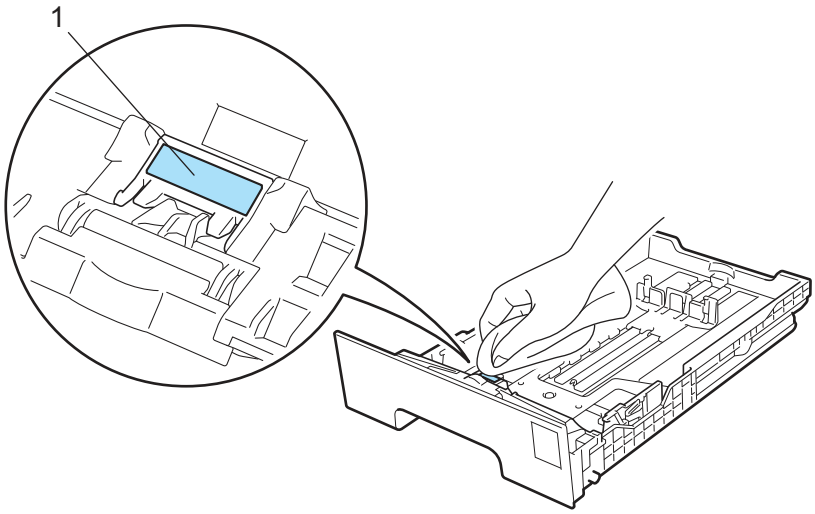

4 Wipe the two pick-up rollers (1) inside of the printer to remove dust.

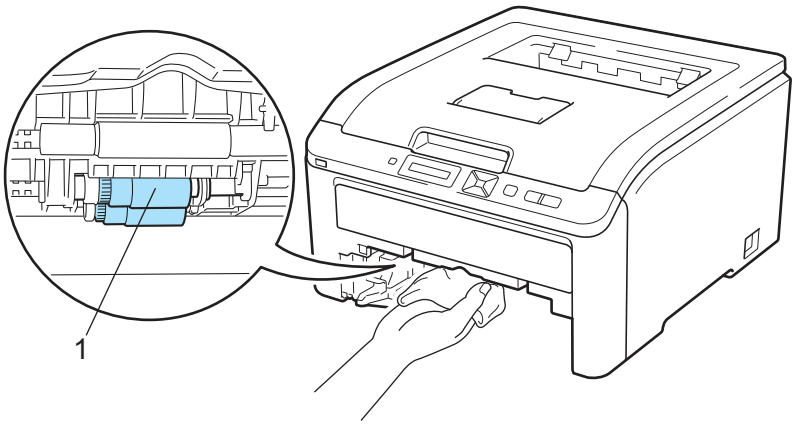

5 Put the paper tray back in the printer.

6 Plug the printer back in, and then turn on the power switch.

6 Troubleshooting

You can correct most problems by yourself. If you need additional help, the Brother Solutions Center offers the latest FAQs and troubleshooting tips. Visit us at http://solutions.brother.com/.

Identifying your problem

First, check the following:

- The AC power cord is connected properly and the printer is turned on.
- All of the protective parts have been removed.
- The toner cartridges and drum units are installed properly.
- The top and back covers are fully closed.
- Paper is inserted properly in the paper tray.
- The interface cable is securely connected to the printer and the computer.
- The correct driver for the printer has been chosen and is installed.
- The computer is set up to connect to the correct printer port.

Printer does not print:

If you did not solve your problem with the above checks, identify your problem and then go to the page suggested below.

- **LCD Messages**

  (See *LCD messages* on page 142.)
- **Paper handling**

  (See *Paper handling* on page 145 and *Paper jams and how to clear them* on page 146.)
- **Other problems**

  (See *Other problems* on page 161.)

Pages are printed, but there are problems with:

- **Print quality**

  (See *Improving the print quality* on page 153.)
- **Printout is incorrect**

  (See *Solving print problems* on page 160.)

LCD messages

As with any sophisticated office product, errors may occur and consumable items may need to be replaced. If this happens, your printer automatically stops printing, diagnoses the problem, and displays the resulting message on the LCD to alert you. The most common error and maintenance messages are shown below. You can clear most errors and routine maintenance messages by yourself, referring to the following tables. If you need more help, the Brother Solutions Center offers the latest FAQs and troubleshooting tips.

Visit us at http://solutions.brother.com/.

If you cannot clear the problem, call the dealer you bought the printer from or Brother Customer Service.

Note

The LCD names for the paper trays are as follows.

- Standard paper tray: `Tray 1`
- Manual feed slot: `Manual Feed`

Error messages

Error message	Action
`Access Error` (HL-3075CW only)	The USB device was removed while data was processing. Press **Cancel**. Reinsert the USB device and try to print with Direct Print or PictBridge.
`Cartridge Error`	Take out the drum unit and toner cartridge assembly for the toner color that is indicated on the LCD. Remove the toner cartridge and then re-install it in the drum. Put the drum unit and toner cartridge assembly back into the printer again. Repeat this process for each drum unit and toner cartridge assembly until the error message is cleared from the LCD. If the problem continues, call your dealer or Brother Customer Service.
`Cover is Open`	Close the cover that is indicated on the LCD.
`DIMM Error`	Turn off the printer. Re-install the DIMM correctly. Wait a few seconds, and then turn it on again. If this error message appears again, replace the DIMM with a new one. (See *Installing extra memory* on page 99.)

`Drum Error`
<Scrolling message>
`Slide the Green tab on Drum Unit.`
	Clean the corona wires. (See *Cleaning the corona wires* on page 130.)

`Drum Error`
<Scrolling message>
`Replace the Drum Unit.`
	Replace the drum unit with a new one for the color that is indicated on the LCD. (See *Replacing the drum units* on page 112.)

`Fuser Error`	Turn the power switch off, wait a few seconds and then turn it again. Leave the printer for 15 minutes with the power on.
`Jam XXX`	Carefully pull out the jammed paper from the area shown in *Paper jams and how to clear them* on page 146.
`Low Temperature`	Increase room temperature to allow the printer to operate.
`Manual Feed`	Put the same size of paper in the manual feed slot as is shown on the LCD.

Error messages (continued)

Error message	Action
No Belt Unit	Re-install the belt unit. (See *Belt unit* on page 117.)
No Paper	Put the paper in the paper tray and then press **Go**, or put the paper in the manual feed slot. If the problem is not solved, the paper pick-up roller may be stained. Clean the paper pick-up roller. (See *Cleaning the paper pick-up roller* on page 139.)
No Toner	Re-install the toner cartridge that is indicated on the LCD. (See *Toner cartridges* on page 103) Re-install the drum unit that is indicated on the LCD. (See *Drum units* on page 111)
No Waste Toner	Re-install the Waste Toner Box. (See *Waste toner box* on page 121.)
Out of Memory	If the LCD shows this error message when you print the secure data, Press Cancel and delete the previously stored data. Except in the case of printing secure data, add more memory. (See *Installing extra memory* on page 99.)
Print Unable 1A	Turn the power switch off and fully open the top cover. Leave the printer off and open for 30 minutes to remove any condensation from inside the machine, then close the top cover and turn it on again. If this does not clear the error, call your dealer or a Brother Customer Service.
Short Paper	Open the back cover (back output tray) to let the printed paper out on the back out put tray. Remove the printed pages and then press **Go**.
Size Mismatch	Put the same size paper in the paper tray that is selected in the printer driver, and then press **Go**, or select the size of paper you set in the Tray1 Size setting from the control panel.
Small Paper	Open the back cover (back output tray) to let the printed paper out on the back out put tray and then press **Go**.
Toner Error	Pull out all the drum unit and toner cartridge assemblies. Take out the toner cartridge and put it back into the printer again.
Unusable Device (HL-3075CW only)	Remove the USB flash memory drive from the USB Direct Interface.

Error messages in Color Correction

Call service message	Action
Calibrate <Scrolling message> Calibration failed. See Troubleshooting chapter in User's guide.	■ Turn off the printer. Wait a few seconds, then turn it on again. ■ Identify the color causing the problem and put in a new drum unit. (See *Replacing the drum units* on page 112.) To identify the color of the drum unit, visit us at http://solutions.brother.com/ to view our FAQs and troubleshooting tips. ■ Put in a new belt unit. (See *Replacing the belt unit* on page 117.) ■ Put in a waste toner box. (See *Replacing the waste toner box* on page 122.) ■ If the problem continues, call your dealer or Brother Customer Service.
Registration <Scrolling message> Registration failed. See Troubleshooting chapter in User's guide.	■ Turn off the printer. Wait a few seconds, then turn it on again. ■ Put in a new belt unit. (See *Replacing the belt unit* on page 117.) ■ If the problem continues, call your dealer or Brother Customer Service.

Maintenance messages

Error message	Meaning	Action
`Toner Low (X)` [1]	The toner cartridge is near the end of its life.	Buy a new toner cartridge for the color that is indicated on the LCD before you get a `Replace Toner` message.
`Drums End Soon`	The drum units are near the end of their life.	Buy a new drum unit set before you get a `Replace Drums` message.
`Drum End Soon(X)` [1]	The drum unit for the color indicated on the LCD is near the end of its life.	Buy a new drum unit for the color indicated on the LCD before you get a `Replace Drum (X)` message.
`Belt End Soon`	The belt unit is near the end of its life.	Buy a new belt unit before you get a `Replace Belt` message.
`WT Box End Soon`	The waste toner box is almost full.	Buy a new waste toner box before you get a `Replace WT Box` message.
`Replace Toner`	It is time to replace the toner cartridge.	Replace the toner cartridge for the color indicated on the LCD. (See *Replacing the toner cartridges* on page 104.)
`Replace Drums`	It is time to replace the drum units.	Replace the drum units. (See *Replacing the drum units* on page 112.)
`Replace Drum (X)` [1]	It is time to replace the drum unit for the indicated color.	Replace the drum unit for the color indicated on the LCD. (See *Replacing the drum units* on page 112.)
`Replace Belt`	It is time to replace the belt unit.	Replace the belt unit. (See *Replacing the belt unit* on page 117.)
`Replace WT box`	It is time to replace the waste toner box.	Replace the waste toner box. (See *Replacing the waste toner box* on page 122.)
`Replace PF Kit1`	It is time to replace the paper feeding kit 1.	Replace the paper feeding kit 1. Call your dealer or Brother Customer Service.
`Replace Fuser`	It is time to replace the fuser unit.	Replace the fuser unit. Call your dealer or Brother Customer Service.

[1] (X) shows the toner cartridge or drum unit color that is near the end of its life. (K)=Black, (Y)=Yellow, (M)=Magenta, (C)=Cyan.

Call service messages

Call service message	Action
`Print Unable ##` (Except `Print Unable 1A`)	Turn off the printer. Wait a few seconds, then turn it on again. If this does not clear the error, call your dealer or a Brother Customer Service.

Paper handling

First, make sure that you are using paper that meets Brother recommended paper specifications. (See *About paper* on page 1.)

Problem	Recommendation
The printer does not feed paper.	■ If there is paper in the paper tray, make sure it is straight. If the paper is curled, straighten it before printing. Sometimes it is helpful to remove the paper. Turn the stack over and put it back in the paper tray. ■ Reduce the amount of paper in the paper tray, and then try again. ■ Make sure that manual feed mode is not chosen in the printer driver. ■ Clean the paper pick-up roller. See *Cleaning the paper pick-up roller* on page 139.
The printer does not feed paper from the manual feed slot.	■ Make sure that you have chosen the **Manual** in the Paper Source of the printer driver.
The printer does not feed envelopes.	■ The printer can feed envelopes from the manual feed slot. You must set up your application to print on the size of envelopes you are using. This is usually done in the page setup or document setup menu of your software. (See your application manual.)
A paper jam has occurred.	■ Clear the jammed paper. (See *Paper jams and how to clear them* on page 146.)
The printer does not print.	■ Make sure that the cable is connected to the printer. ■ Make sure the printer is powered on and that no error messages on the LCD. ■ Make sure that you have chosen the correct printer driver.
When printing on normal paper, it creases.	■ Change the printer driver setting in **Media Type** to a thin setting.
The paper slides off the top output tray.	■ Lift up the support flap (1). 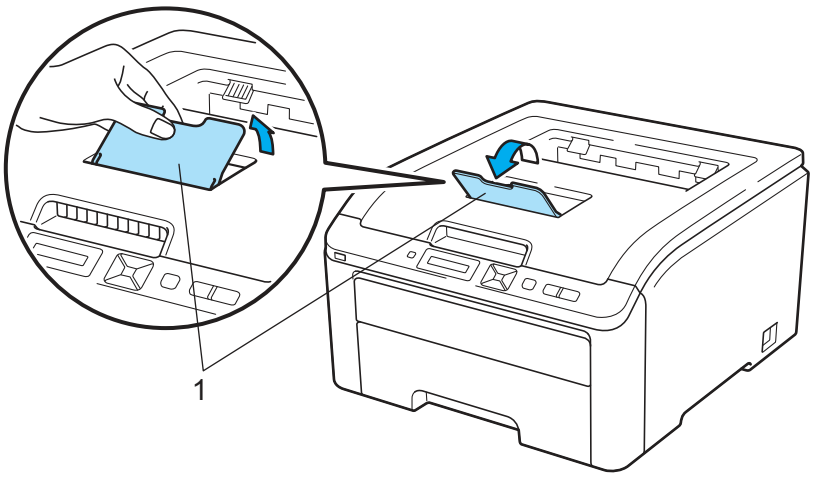

Paper jams and how to clear them

If paper jams inside the printer, the printer will stop. One of the following LCD messages will appear to tell you where to find the jammed paper.

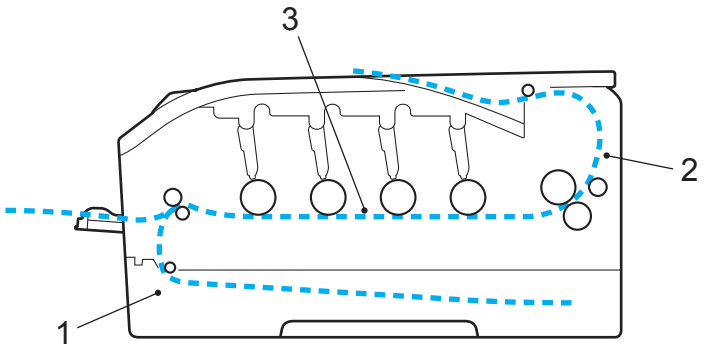

- `Jam Tray 1` (1)

  Paper jam in the standard paper tray (Tray 1). (See page 147.)

- `Jam Rear` (2)

  Paper jam where the paper comes out of the printer. (See page 148.)

- `Jam Inside` (3)

  Paper jam inside the printer. (See page 150.)

If the error message still appears on the LCD after you remove the jammed paper, there may be more paper jammed somewhere else. Check the printer thoroughly.

Note

Always remove all paper from the paper tray and straighten the stack when you add new paper. This helps prevent multiple sheets of paper from feeding through the printer at one time and prevents paper jams.

Jam Tray 1 (Paper jam inside the paper tray)

```
Jam Tray 1
```

If a paper jam occurs inside the paper tray, follow these steps:

1. Pull the paper tray completely out of the printer.

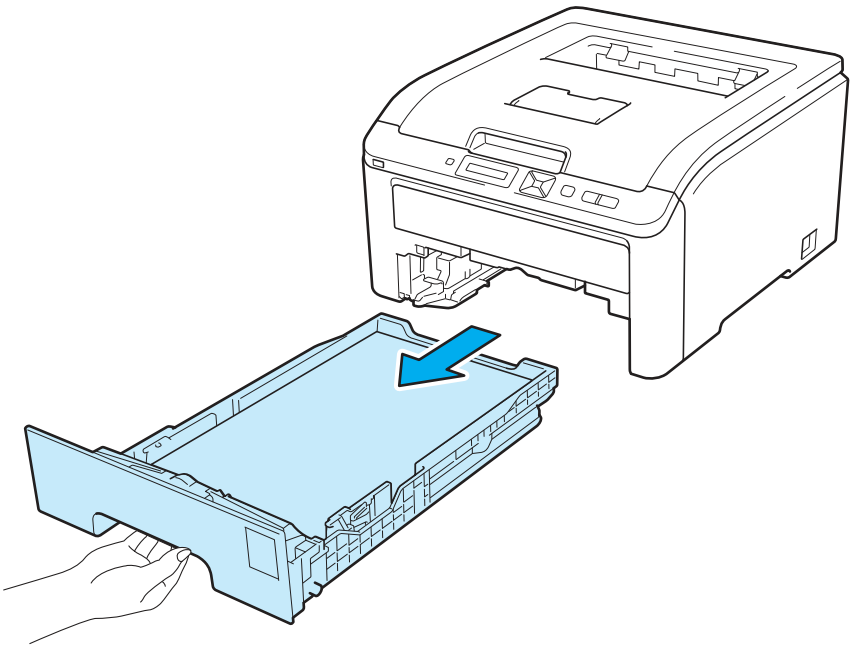

2. Use both hands to slowly pull out the jammed paper.

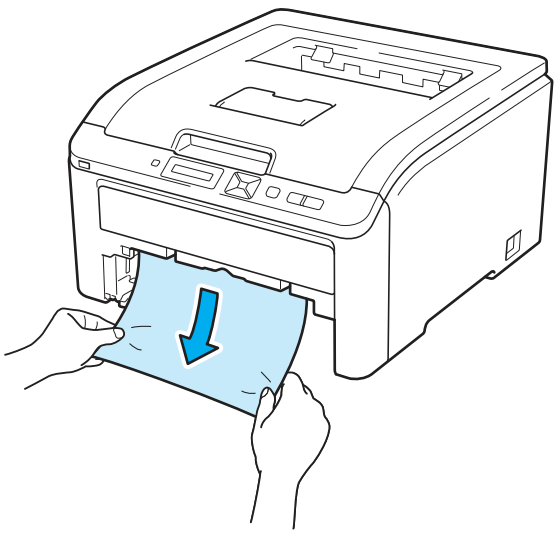

Note

Pulling out the jammed paper downward allows you to remove the paper easier.

3. Make sure that the paper is below the maximum paper mark. While pressing the green paper-guide release lever, slide the paper guides to fit the paper size. Make sure that the guides are firmly in the slots.

4 Put the paper tray firmly back in the printer.

5 Press **Go** to resume printing.

Jam Rear (Paper jam behind the back cover)

```
Jam Rear
```

If a paper jam occurs behind the face-up output tray, follow these steps:

1 Turn off the printer's power switch and unplug the AC power cord.

2 Open the back cover.

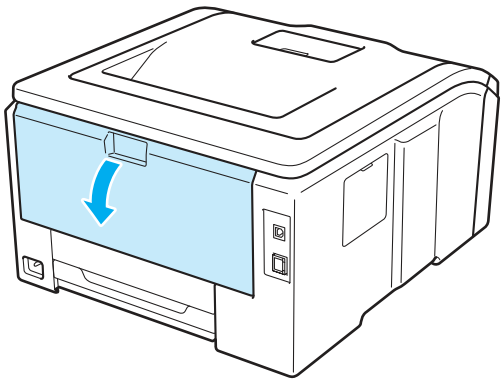

CAUTION

After you have just used the printer, some internal parts will be extremely hot. Wait at least 10 minutes for the printer to cool down before continuing to the next step.

3 Pull the green tabs at the left and right hand sides toward you and fold down the fuser cover (1).

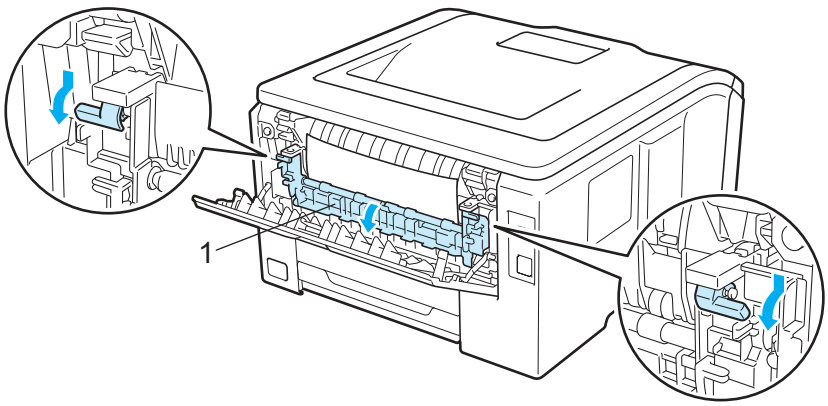

4 Using both hands, gently pull the jammed paper out of the fuser unit.

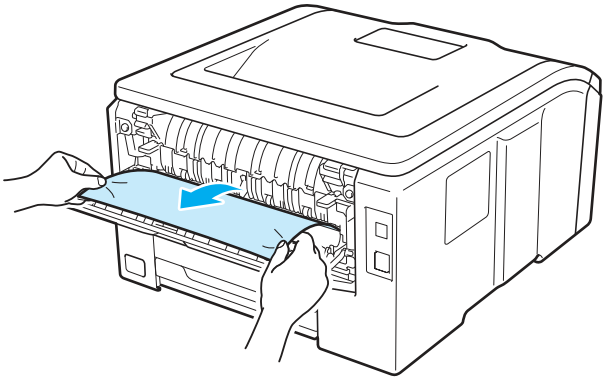

5 Close the fuser cover (1) and lift the green tabs at the left and right hand sides.

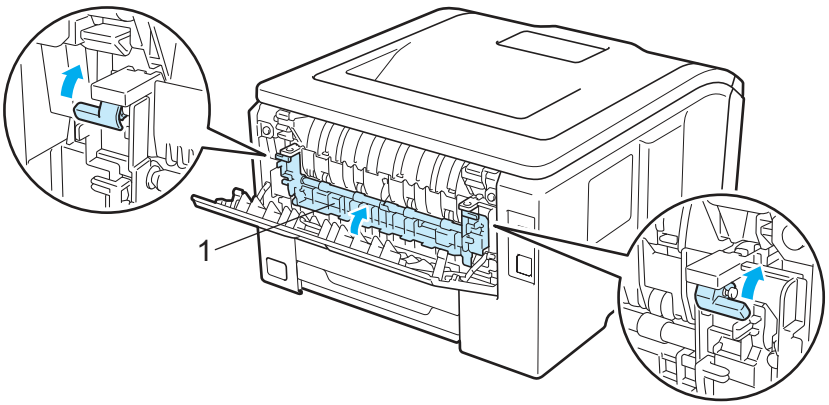

6 Close the back cover.

7 Plug the printer back in, and then turn on the power switch.

Jam Inside (Paper jam inside the printer)

```
Jam Inside
```

If a paper jam occurs inside the printer, follow these steps:

1. Turn off the printer's power switch and unplug the AC power cord.
2. Fully open the top cover by lifting up on the handle (1).

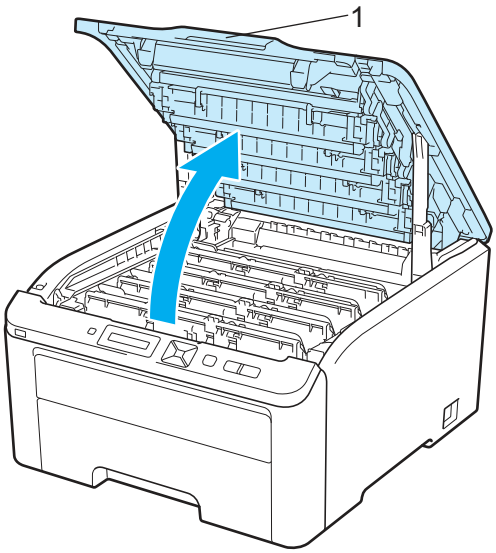

CAUTION

After you have just used the printer, some internal parts will be extremely hot. Wait at least 10 minutes for the printer to cool down before continuing to the next step.

3 Take out all four drum unit and toner cartridge assemblies.

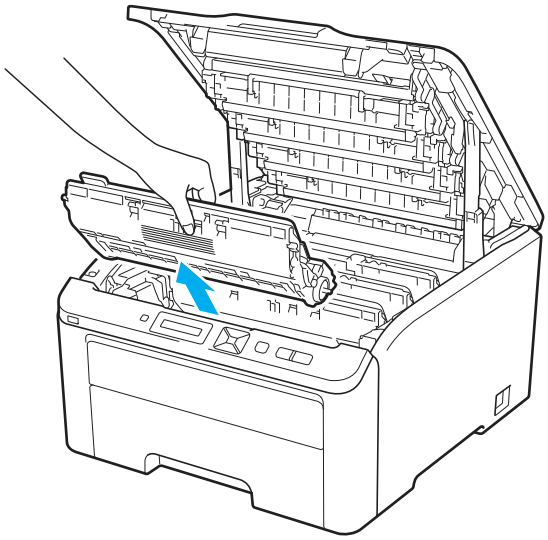

IMPORTANT

- We recommend that you place each drum unit and toner cartridge assembly on a clean, flat surface with a sheet of disposable paper or cloth underneath it in case you accidentally spill or scatter toner.
- To prevent damage to the printer from static electricity, DO NOT touch the electrodes shown in the illustration.

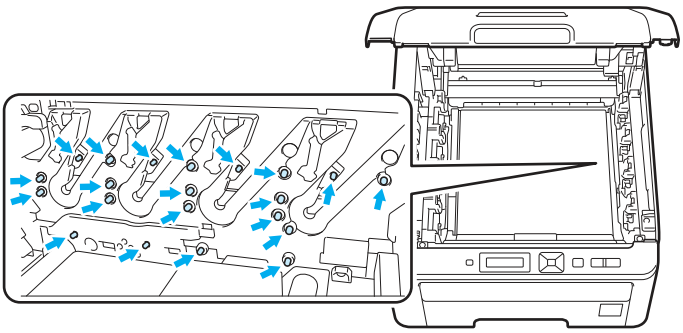

- Handle the toner cartridges carefully. If toner scatters on your hands or clothes, wipe or wash it off with cold water at once.
- To avoid print quality problems, DO NOT touch the shaded parts shown in the illustrations.

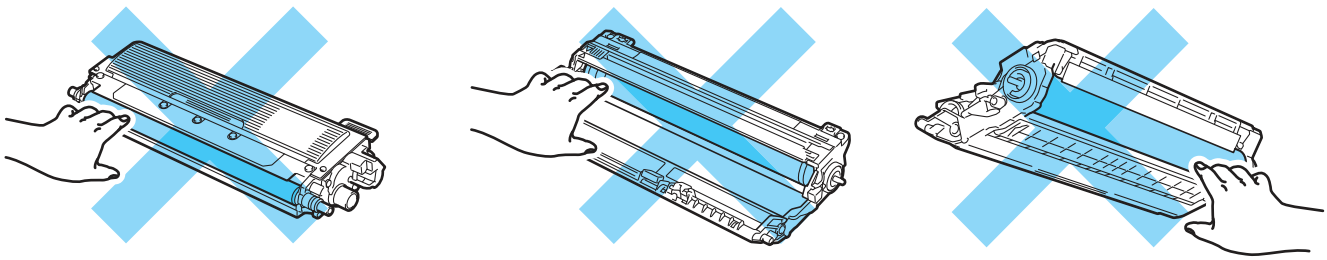

4 Pull out the jammed paper slowly.

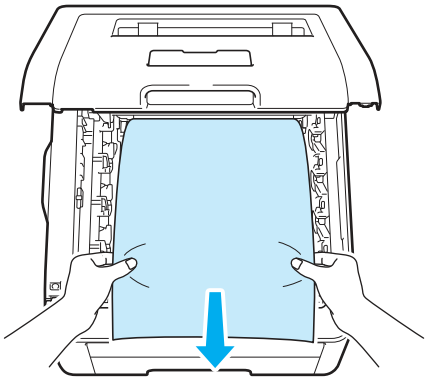

5 Slide each drum unit and toner cartridge assembly into the printer. Make sure that you match the toner cartridge color to the same color label on the printer for all four drum unit and toner cartridge assemblies.

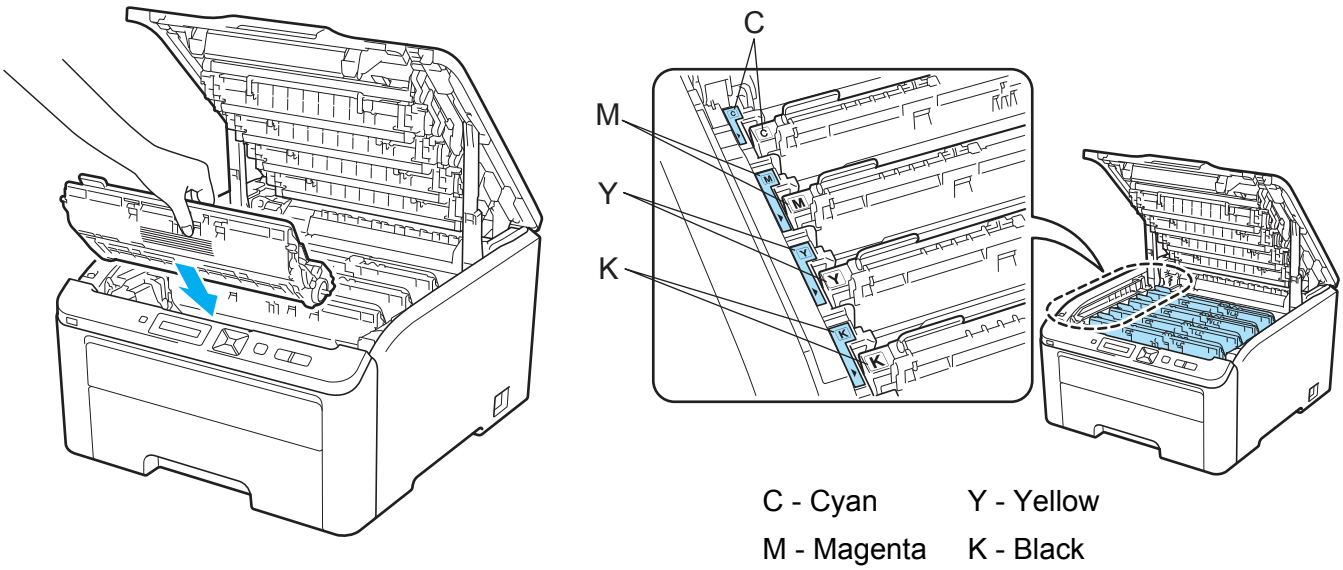

6 Close the top cover of the printer.

7 Plug the printer back in, and then turn on the power switch.

Improving the print quality

If you have a print quality problem, print a test page first (see *Machine Info.* on page 82). If the printout looks good, the problem is probably not the printer. Check the interface cable or try the printer on another computer. If the printout have a quality problem, check the following steps first. And then, if you still have a print quality problem, check the chart below and follow the recommendation.

1. Check that you use the paper that meets our specifications. (See *About paper* on page 1.)

Note

To get the best print quality, we suggest using the recommended paper. (See *About paper* on page 1.)

2. Check that the drum units and toner cartridges are installed properly.

Examples of poor print quality	Recommendation
White lines, bands or ribbing across the page 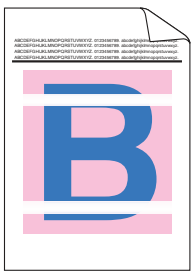	■ Put in a new drum unit. (See *Replacing the drum units* on page 112.) To identify the color of the drum unit, visit us at http://solutions.brother.com/ to view our FAQs and troubleshooting tips.
Colors are light or unclear on the whole page 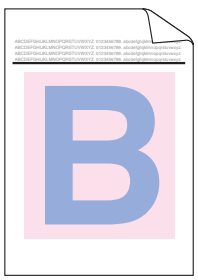	■ Make sure toner save mode is off in the control panel or the printer driver. ■ Make sure that the media type setting in the driver matches the type of paper you are using. (See *About paper* on page 1.) ■ Shake all four toner cartridges gently. ■ Wipe the windows of all four LED heads with a dry lint free soft cloth. (See *Cleaning the LED head* on page 129.)

Examples of poor print quality	Recommendation
White streaks or bands down the page 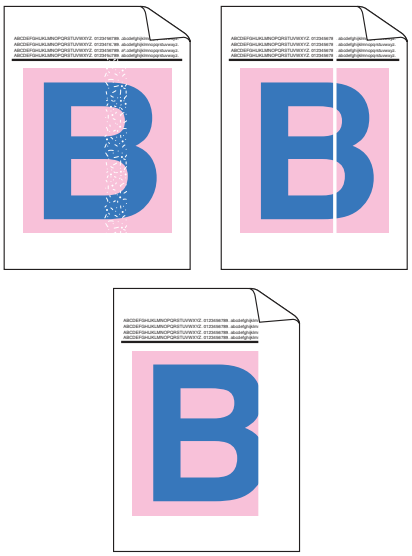	■ Wipe the windows of LED head with a dry lint free soft cloth. (See *Cleaning the LED head* on page 129.) ■ Make sure that foreign material such as a torn piece of paper, sticky note or dust is not inside the machine and around the drum unit and toner cartridge. ■ Clean the drum unit. (See *Large spots on the printed pages* in *Cleaning the drum unit* on page 133.) ■ Identify the missing color and put in a new toner cartridge. (See *Replacing the toner cartridges* on page 104.) To identify the color of the toner cartridge, visit us at http://solutions.brother.com/ to view our FAQs and troubleshooting tips.
Colored streaks or bands down the page 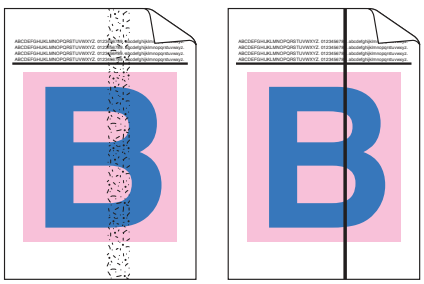	■ Clean all four corona wires (one for each color) inside the drum unit by sliding the green tab. (See *Cleaning the corona wires* on page 130.) ■ Make sure the corona wire cleaners are at their home positions (▲). ■ Replace the toner cartridge that matches the color of the streak or band. (See *Replacing the toner cartridges* on page 104.) To identify the color of the toner cartridge, visit us at http://solutions.brother.com/ to view our FAQs and troubleshooting tips. ■ Put in a new drum unit. (See *Replacing the drum units* on page 112.) To identify the color of the drum unit, visit us at http://solutions.brother.com/ to view our FAQs and troubleshooting tips.
Vertical streaks in a light background 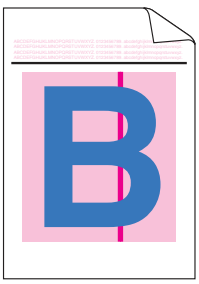	■ Wipe the windows of LED head with a dry lint free soft cloth. (See *Cleaning the LED head* on page 129.)

Examples of poor print quality	Recommendation
Colored lines across the page 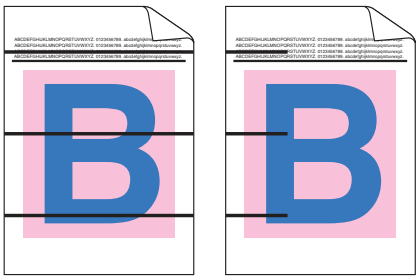	■ Replace the toner cartridge that matches the color of the line. (See *Replacing the toner cartridges* on page 104.) To identify the color of the toner cartridge, visit us at http://solutions.brother.com/ to view our FAQs and troubleshooting tips. ■ Put in a new drum unit. (See *Replacing the drum units* on page 112.) To identify the color of the drum unit, visit us at http://solutions.brother.com/ to view our FAQs and troubleshooting tips.
White spots or hollow print	■ If the problem is not solved after printing a few pages, the drum unit may be stained. Clean all four drum units. (See *Small spots on the printed pages* in *Cleaning the drum unit* on page 133.) ■ Make sure that the media type setting in the driver matches the type of paper you are using. (See *About paper* on page 1.) ■ Check the printer's environment. Conditions such as high humidity can cause white spots or hollow print. (See *Choosing a location* in the *Quick Setup Guide*.)
Completely blank or some colors are missing 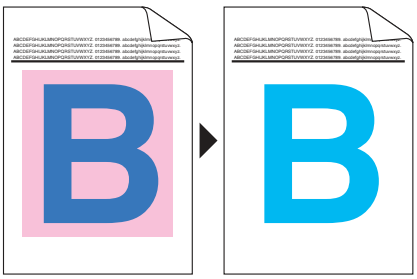	■ Put in a new toner cartridge. (See *Replacing the toner cartridges* on page 104.) To identify the color of the toner cartridge, visit us at http://solutions.brother.com/ to view our FAQs and troubleshooting tips. ■ Put in a new drum unit. (See *Replacing the drum units* on page 112.) To identify the color of the drum unit, visit us at http://solutions.brother.com/ to view our FAQs and troubleshooting tips.
Colored spots at 94mm 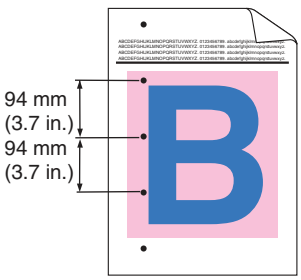	■ If the problem is not solved after printing a few pages, the drum unit may have glue from a label stuck on the drum surface. Clean the drum unit. (See *Large spots on the printed pages* in *Cleaning the drum unit* on page 133.) ■ Put in a new drum unit. (See *Replacing the drum units* on page 112.) To identify the color of the drum unit, visit us at http://solutions.brother.com/ to view our FAQs and troubleshooting tips.

Examples of poor print quality	Recommendation
Colored spots at 30mm 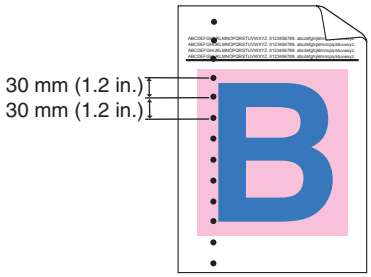 	■ Identify the color causing the problem and put in a new toner cartridge. (See *Replacing the toner cartridges* on page 104.) To identify the color of the toner cartridge, visit us at http://solutions.brother.com/ to view our FAQs and troubleshooting tips.
Toner scatter or toner stain 	■ Check the printer's environment. Conditions such as high humidity and high temperatures may cause this print quality problem. (See *Choosing a location* in the *Quick Setup Guide*.) ■ Identify the color causing the problem and put in a new toner cartridge. (See *Replacing the toner cartridges* on page 104.) To identify the color of the toner cartridge, visit us at http://solutions.brother.com/ to view our FAQs and troubleshooting tips. ■ If the problem continues, put in a new drum unit. (See *Replacing the drum units* on page 112.) To identify the color of the drum unit, visit us at http://solutions.brother.com/ to view our FAQs and troubleshooting tips.

Examples of poor print quality	Recommendation
The color of your printouts is not what you expected	■ Make sure toner save mode is off in the control panel or the printer driver. ■ Perform the calibration. (See *Calibration* on page 95.) ■ Adjust the color by using the custom setting in the driver and by using the control panel. Colors the printer can print and colors you see on a monitor are different. The printer may not be able to reproduce the colors on your monitor. (See *Color Correction* on page 89.) ■ If colors appear in the printed gray areas, make sure there is a check in the **Improve Gray Color** check box of the printer driver. See **Improve Gray Color** in *Settings Dialog* on page 38 (For Windows® printer driver), *Advanced options* on page 50 (For Windows® BR-Script printer driver) or *Print Settings* on page 59 (For Macintosh printer driver). ■ If shaded areas look dull, remove the check from the **Improve Gray Color** check box of the printer driver. ■ If a printed black graphic is too light, choose **Enhance Black Printing** mode in the printer driver. See **Enhance Black Printing** in *Settings Dialog* on page 38 (For Windows® printer driver), *Advanced options* on page 50 (For Windows® BR-Script printer driver) or *Print Settings* on page 59 (For Macintosh printer driver). ■ Identify the color causing the problem and put in a new toner cartridge. (See *Replacing the toner cartridges* on page 104.) To identify the color of the toner cartridge, visit us at http://solutions.brother.com/ to view our FAQs and troubleshooting tips. ■ Identify the color causing the problem and put in a new drum unit. (See *Replacing the drum units* on page 112.) To identify the color of the drum unit, visit us at http://solutions.brother.com/ to view our FAQs and troubleshooting tips.
All one color 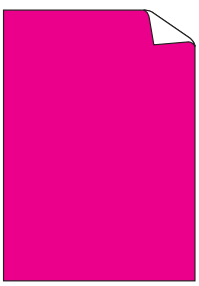	■ Put in a new drum unit. (See *Replacing the drum units* on page 112.) To identify the color of the drum unit, visit us at http://solutions.brother.com/ to view our FAQs and troubleshooting tips.

Examples of poor print quality	Recommendation
Color misregistration 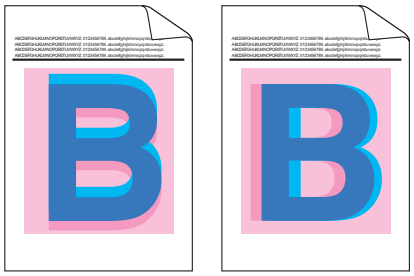	■ Make sure that the printer is on a solid level surface. ■ Perform the auto color registration using the control panel (see *Auto Registration* on page 96) or perform the manual color registration using the control panel (see *Manual Registration* on page 97). ■ Identify the color causing the problem and put in a new drum unit. (See *Replacing the drum units* on page 112.) To identify the color of the drum unit, visit us at http://solutions.brother.com/ to view our FAQs and troubleshooting tips. ■ Put in a new belt unit. (See *Replacing the belt unit* on page 117.)
Uneven density appears periodically across the page 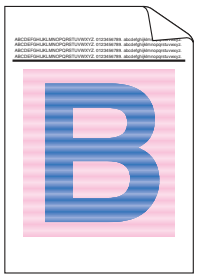	■ Perform the calibration. (See *Calibration* on page 95.) ■ Identify the color that is uneven and put in a new toner cartridge for that color. (See *Replacing the toner cartridges* on page 104.) To identify the color of the toner cartridge, visit us at http://solutions.brother.com/ to view our FAQs and troubleshooting tips. ■ Identify the color that is uneven and put in a new drum unit. (See *Replacing the drum units* on page 112.) To identify the color of the drum unit, visit us at http://solutions.brother.com/ to view our FAQs and troubleshooting tips.
Missing image at thin line	■ Make sure toner save mode is off in the control panel or the printer driver. ■ Change the print resolution. ■ If you use Windows printer driver, choose Improve pattern printing or Improve Thin Line in Print Setting of Basic tab. (See *Settings Dialog* on page 38.)
Wrinkle 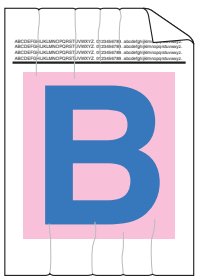	■ Change to the recommended type of paper. ■ Make sure that the back cover is closed properly. ■ Make sure that two gray levers inside the back cover are in the up position. ■ Make sure that the media type setting in the driver matches the type of paper you are using. (See *About paper* on page 1.)
Offset image	■ Make sure that the media type setting in the driver matches the type of paper you are using. (See *About paper* on page 1.) ■ Make sure that two gray levers inside the back cover are in the up position. ■ Check the printer's environment. Conditions such as dry and low temperatures may cause this print quality problem. (See *Choosing a location* in the *Quick Setup Guide*.) ■ Identify the color causing the problem and put in a new drum unit. (See *Replacing the drum units* on page 112.) To identify the color of the drum unit, visit us at http://solutions.brother.com/ to view our FAQs and troubleshooting tips.

Examples of poor print quality	Recommendation
Poor fixing 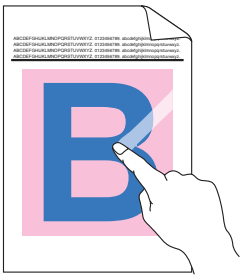	■ Make sure that the media type setting in the driver matches the type of paper you are using. (See *About paper* on page 1.) ■ Make sure that two gray levers inside the back cover are in the up position. ■ Choose **Improve Toner Fixing** mode in the printer driver. See **Improve Print Output** in *Improve Print Output* on page 44 (For Windows® printer driver), *Advanced options* on page 50 (For Windows® BR-Script printer driver) or *Print Settings* on page 59 (For Macintosh printer driver). If this selection does not provide enough improvement, select **Thicker paper** in **Media type** settings.
Curled or wavy 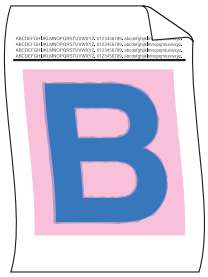	■ Choose **Reduce Paper Curl** mode in the printer driver when you do not use our recommended paper. See **Improve Print Output** in *Improve Print Output* on page 44 (For Windows® printer driver), *Advanced options* on page 50 (For Windows® BR-Script printer driver) or *Print Settings* on page 59 (For Macintosh printer driver). ■ If you do not use the printer often, the paper may have been in the paper tray too long. Turn over the stack of paper in the paper tray. Also, fan the paper stack and then rotate the paper 180° in the paper tray. ■ Store the paper where it will not be exposed to high temperatures and high humidity.
Uneven density or faded 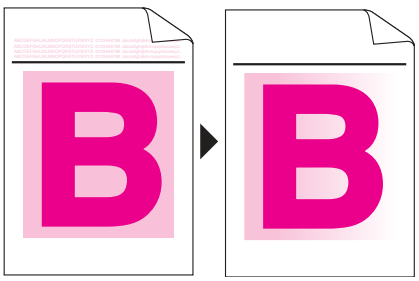	■ Fully open the top cover and then close it again.
Envelope creases 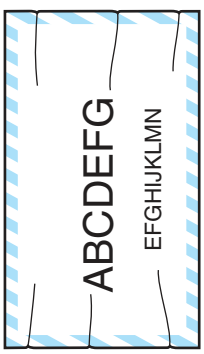	■ Make sure that the envelope levers inside the back cover is pulled down when you print the envelope. 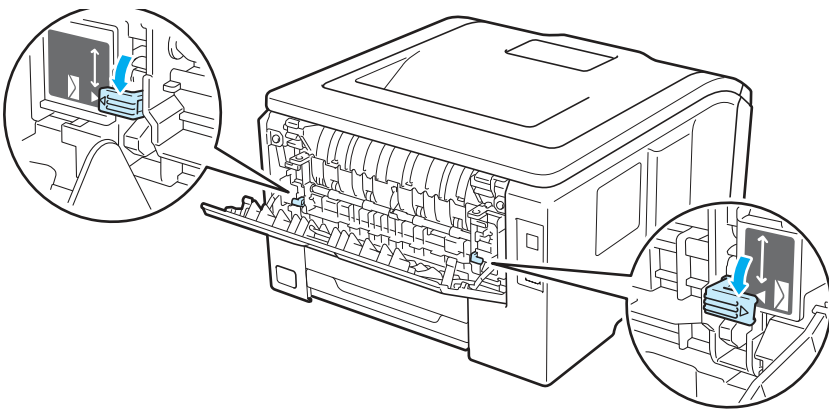

Solving print problems

Problem	Recommendation
The printer will not turn on.	■ Adverse conditions on the power connection (such as lightning or a power surge) may have triggered the printer's internal safety mechanisms. Turn the printer off and unplug the power cord. Wait for ten minutes, then plug in the power cord and turn the printer on.
The printer prints unexpectedly or it prints garbage data.	■ Make sure that the printer cable is not too long. We recommend that you use a USB cable that is no longer than 2 meters (6.5 feet). ■ Make sure that the printer cable is not damaged or broken. ■ If you are using an interface-switching device, remove it. Connect your computer directly to your printer, and then try again. ■ Make sure that you have chosen the correct printer driver with 'Set as Default Printer'. ■ Make sure that the printer is not connected to the same port that is also connected to a storage device or scanner. Take away all other devices and connect the port only to the printer. ■ Turn off the **Status Monitor**.
The printer cannot print full pages of a document. An error message **Out of Memory** is appears.	■ Press **Go** to print the remaining data in the printer memory. Cancel the print job if you want to delete the remaining data in the printer memory. (See *Buttons* on page 74.) ■ Reduce the complexity of your document or select a lower print resolution. ■ Add more memory. (See *Installing extra memory* on page 99.)
The headers or footers appear when the document displays on the screen but they do not show up when it is printed.	■ Adjust the top and bottom margins of your document.

Network problems

For problems concerning using your printer on a Network, see the *Network User's Guide* on the CD-ROM we have supplied.

The latest Network User's Guide in PDF format is available by accessing the Brother Solutions Center (http://solutions.brother.com/).

Other problems

For Macintosh with USB

Problem	Recommendation
The printer does not appear in **Print Setup Utility** (Mac OS X 10.4.11) or **Print & Fax** in **System Preferences** (Mac OS X 10.5.x and 10.6.x).	■ Make sure the printer is powered on and that no error messages on the LCD. ■ Make sure that the USB interface cable is connected directly to the Macintosh and that it is connected to the USB port of the printer. ■ Make sure the printer driver is installed correctly.
Unable to print from the application.	■ Make sure that the supplied Macintosh printer driver is installed in the **Hard Disk** and that it is chosen with **Print Setup Utility** (Mac OS X 10.4.11) or **Print&Fax** in **System Preferences** (Mac OS X 10.5.x and 10.6.x).

BR-Script 3 (HL-3075CW only)

Problem	Recommendation
The print speed slows down.	Add optional memory. (See *Installing extra memory* on page 99.)
The printer cannot print EPS data that includes binary.	You need the following settings to print EPS data: 1 For Windows® 7 and Windows Server® 2008 R2: Click the **Start** button and **Devices and Printers**. For Windows Vista®: Click **Start** button, **Control Panel**, **Hardware and Sound**, and then **Printers**. For Windows® XP and Windows Server® 2003/2008: Click **Start** button, and select **Printers and Faxes**. 2 For Windows® 7 and Windows Server® 2008 R2: Right-click the **Brother HL-3075CW series** icon, choose **Printer properties** and select **Brother HL-3075CW BR-Script3**. For Windows® XP, Windows Vista® and Windows Server® 2003/2008: Right-click the **Brother HL-3075CW BR-Script3** icon and select **Properties**. 3 From the **Device Settings** tab, choose **TBCP** (Tagged binary communication protocol) in **Output Protocol**.

A Appendix

Printer specifications

Engine

Model		HL-3045CN	HL-3075CW
Technology		Electrophotographic LED printer (single-pass)	
Print speed [1] [2] (A4 size/ Letter size)	Monochrome	Up to 18 ppm (A4 size) [3],Up to 19 ppm (Letter size) [3]	
	Full Color	Up to 18 ppm (A4 size) [3],Up to 19 ppm (Letter size) [3]	
First print time [4]	Monochrome	Less than 15 sec	
	Full Color	Less than 16 sec	
Resolution	Windows® XP/ XP Professional x64 Edition, Windows Vista®, Windows® 7, Windows Server® 2003/ Windows Server® 2003 x64 Edition, Windows Server® 2008, Windows Server® 2008 R2	2400 dpi (600 × 2400) quality 600 × 600 dpi	
	DOS	N/A	600 × 600 dpi
	Mac OS X 10.4.11, 10.5.x, 10.6.x	2400 dpi (600 × 2400) quality 600 × 600 dpi	
	Linux	600 × 600 dpi	

[1] The printing speed may change depending on the type of document you print.

[2] Print speed may be slower when the printer is connected by wireless LAN.

[3] From standard paper tray.

[4] First print out time may change if the machine is calibrating or registering itself.

Controller

Model		HL-3045CN	HL-3075CW
Processor		300MHz	
Memory	Standard	32 MB	64 MB
	Option	1 DIMM slot; expandable up to 544 MB	1 DIMM slot; expandable up to 576 MB
Interface	Standard	Hi-Speed USB 2.0, 10BASE-T/100BASE-TX Ethernet	Hi-Speed USB 2.0, 10BASE-T/100BASE-TX Ethernet, Wireless LAN IEEE 802.11b/g
Network Connectivity	Protocols	TCP/IP (Standard 10/100BASE-TX Ethernet) [1]	
	Management tool	BRAdmin Light [2] BRAdmin Professional 3 [3] Web BRAdmin [4] Web Based Management [5]	
Emulation		N/A	PCL6, BR-Script 3 (PostScript® 3™) [6]
Resident fonts	PCL	N/A	66 scalable fonts, 12 bitmap fonts, 13 bar codes [7]
	PostScript® 3™	N/A	66 fonts

1 See the Network User's Guide locator on the CD-ROM for details on the supported network protocols.

2 Brother original Windows® and Macintosh utility for printer and print server management. Install from the supplied CD-ROM for Windows or download from the Brother Solutions Center at http://solutions.brother.com/ for Macintosh.

3 Brother original Windows® utility for printer and print server management. Download from http://solutions.brother.com/.

4 Server based management utility. Download from http://solutions.brother.com/.

5 Printer and print server management through Web Based Management (Web browser).

6 PostScript® 3™ language emulation.

7 Code39, Interleaved 2 of 5, FIM (US-PostNet), Post Net (US-PostNet), EAN-8, EAN-13, UPC-A, UPC-E, Codabar, ISBN (EAN), ISBN (UPC-E), Code128 (set A, set B, set C), EAN-128 (set A, set B, set C)

Software

Model		HL-3045CN	HL-3075CW
Printer driver	Windows® [1]	Host-Based Driver for Windows® XP Home Edition, Windows® XP Professional x64 Edition, Windows Server® 2003, Windows Server® 2003 x64 Edition, Windows Vista®, Windows Server® 2008, Windows Server® 2008 R2, Windows® 7	
		N/A	BR-Script 3 (PPD file for Windows® XP Home Edition, Windows® XP Professional x64 Edition, Windows Server® 2003, Windows Server® 2003 x64 Edition, Windows Vista®, Windows Server® 2008, Windows Server® 2008 R2, Windows® 7).
	Macintosh	Macintosh Printer Driver for Mac OS X 10.4.11, 10.5.x and 10.6.x	
		N/A	BR-Script 3 (PPD file) for Mac OS X 10.4.11, 10.5.x and 10.6.x
	Linux [2] [3]	Linux driver for CUPS printing system (x86, x64 environment)	
		Linux driver for LPD/LPRng printing system (x86, x64 environment)	
Utilities		Driver Deployment Wizard [4]	

1 For the latest driver updates, visit http://solutions.brother.com/.

2 Download the printer driver for Linux from http://solutions.brother.com/.

3 Depending on Linux distributions, the driver may not be available.

4 The Driver Deployment Wizard automates the installation of printers in a peer-to-peer network (Windows® only).

Direct Print feature

Model	HL-3045CN	HL-3075CW
Direct Print	N/A	PDF version1.7 [1], JPEG, Exif+JPEG, PRN (created by HL-3045CN or HL-3075CW printer driver) [2], TIFF(scanned by all Brother MFC or DCP models), PostScript® 3™(created by HL-3075CW BRScript3 printer driver) [2], XPS version 1.0

1 Data that includes a JBIG2 image file, JPEG2000 image file, or a transparency files is not supported.

2 See *Creating a PRN or PostScript® 3™ (HL-3075CW only) file for direct printing* on page 28.

A

Control panel

Model	HL-3045CN	HL-3075CW
LED	2 LEDs: Data LED, Error LED	
LCD	1 line, 16 Digits	1 line, 16 Digits, 1 color
Button	7 buttons: Go, Cancel, Secure Print, OK, Back and 2 scroll buttons	

Paper handling

Model		HL-3045CN	HL-3075CW
Paper Input [1]	Manual Feed Slot	1 sheet	
	Paper tray (Standard)	250 sheets	
Paper Output [1]	Face-down	100 sheets	
	Face-up	1 sheet	
Duplex		Manual Duplex	

[1] Calculated with 80 g/m^2 (20 lb) paper

Media specifications

Model		HL-3045CN	HL-3075CW
Media types	Manual feed slot	Plain paper, Thin paper, Thick paper, Thicker paper, Recycled paper, Bond paper, Label, Envelopes, Env.Thin, Env.Thick	
	Paper tray	Plain paper, Thin Paper, Recycled paper	
Media weights	Manual feed slot	60 to 163 g/m^2 (16 to 43 lb)	
	Paper tray	60 to 105 g/m^2 (16 to 28 lb)	
Media sizes	Manual feed slot	Width: 76.2 to 220 mm (3.0 to 8.66 in.) Length: 116 to 406.4 mm (4.57 to 16 in.)	
	Paper tray	A4, Letter, Legal [1], B5 (ISO), Executive, A5, A5 (Long Edge), A6, B6 (ISO), Folio	

[1] Legal size paper is not available in some regions outside the USA and Canada.

Supplies

Model		HL-3045CN	HL-3075CW	Order No.
Toner Cartridge	Black	Approx. 2,200 pages A4/Letter pages [1]		TN-210BK
	Cyan, Magenta, Yellow	Approx. 1,400 pages A4/Letter pages [1]		TN-210C, TN-210M, TN-210Y
Drum Unit	Black,Cyan, Magenta, Yellow	Approx. 15,000 pages (1 page / job) [2]		DR-210CL [3], DR-210CL-BK [4], DR-210CL-CMY [5]
Belt Unit		Approx. 50,000 pages A4/Letter pages		BU-200CL
Waste Toner Box		Approx. 50,000 pages A4/Letter pages		WT-200CL

[1] Approx. cartridge yield is declared in accordance with ISO/IEC 19798.

[2] Drum life is approximate and may vary by type of use.

[3] Contains 4 pc. Drum Set.

[4] Contains 1 pc. Black Drum Unit.

[5] Contains 1 pc. Color Drum Unit.

A

Dimensions / weights

Model	HL-3045CN	HL-3075CW
Dimensions (W × D × H)	409 × 466 × 250 mm (16.1 × 18.3 × 9.8 in.)	
Weights	Approx. 19.0 kg (41.9 lb)	

Other

Model				HL-3045CN	HL-3075CW
Power consumption			Printing	Average 480 W at 25 °C (77 °F)	Average 480W at 25 °C (77 °F)
			Standby	Average 70 W at 25 °C (77 °F)	Average 70 W at 25 °C (77 °F)
			Sleep	Average 8 W	Average 10 W
Noise level	Sound Pressure		Printing	LpAm = 53 dB (A)	
			Standby	LpAm = 30 dB (A)	
	Sound power	Printing	Monochrome	LWAd = 6.34 Bell (A) [1]	
			Color	LWAd = 6.29 Bell (A)	
		Standby		LWAd = 3.64 Bell (A)	
Ecology	Power save			Yes	
	Toner save [2]			Yes	

[1] Office equipment with LWAd>6.30 Bell (A) is not suitable for use in rooms where people do primarily intellectual work. Such equipment should be placed in separate rooms because of the noise emission.

[2] We do not recommend Toner Save for printing Photo or Gray Scale images.

Computer requirements

Computer Platform & Operating System Version		Processor Minimum Speed	Minimum RAM	Recommended RAM	Hard Disk Space to install	Supported PC Interface [2]
Windows® Operating System [1]	Windows® XP Home Edition	Intel® Pentium® II or equivalent	128 MB	256 MB	50 MB	USB, 10/100 Base-TX (Ethernet), Wireless 802.11b/g
	Windows® XP Professional					
	Windows® XP Professional x64 Edition	64-bit (Intel® 64 or AMD64) supported CPU	256 MB	512 MB		
	Windows Vista®	Intel® Pentium® 4 or equivalent 64-bit (Intel® 64 or AMD64) supported CPU	512 MB	1 GB		
	Windows® 7	Intel® Pentium® 4 or equivalent 64-bit (Intel® 64 or AMD64) supported CPU	1 GB (32-bit) 2 GB (64-bit)	1 GB (32-bit) 2 GB (64-bit)		
	Windows Server® 2003	Intel® Pentium® III or equivalent	256 MB	512 MB		
	Windows Server® 2003 x64 Edition	64-bit (Intel® 64 or AMD64) supported CPU				
	Windows Server® 2008	Intel® Pentium® 4 or equivalent 64-bit (Intel® 64 or AMD64) supported CPU	512 MB	2 GB		
	Windows Server® 2008 R2	64-bit (Intel® 64 or AMD64) supported CPU				
Macintosh Operating System	OS X 10.4.11 and 10.5.x	PowerPC® G4/G5, Intel® Processor	512 MB	1 GB	80 MB	
	OS X 10.6.x	Intel® Processor	1 GB	2 GB		

1 Microsoft® Internet Explorer 5.5 or greater.

2 Third party USB ports are not supported.

For the latest driver updates, visit http://solutions.brother.com/.

A

Important information for choosing your paper

This section gives information to help you choose paper to use with this printer.

Note

If you use paper that is not recommended, a paper jam or misfeed may occur in the printer. (See *Recommended paper* on page 2.)

Before you buy a large quantity of paper

Make sure that the paper is suitable for the printer.

Paper for plain paper copies

Paper is divided by usage, such as paper for printing and paper for copying. The usage is usually written on the paper's package. Check the package to see whether it is suitable for laser printers. Use paper that is suitable for laser printers.

Basis weight

The basis weight of the paper in general use varies in different countries. We recommend that you use paper that weighs 75 to 90 g/m^2 (20 to 24 lb), although this printer is able to cope with thinner or thicker paper than these weights.

Unit	Europe	USA
g/m^2	80 to 90	75 to 90
lb		20 to 24

Long grain and short grain

The pulp fiber of the paper is aligned during paper manufacturing. And paper can be classified into two types, long grain and short grain.

Long grain paper fibers run in the same direction as the long edge of the paper. Short grain paper fibers run perpendicular to the long edge of the paper. Though most plain paper for copying is long grain, some is short grain. We recommend that you use long grain paper for this printer. Short grain paper is too weak for the paper transport of the printer.

Acid paper and neutralized paper

Paper can be classified as either acid paper or neutralized paper.

Though modern paper manufacture methods started with acid paper, neutralized paper is recently taking the place of acid paper because of environmental issues.

However, many forms of acid paper can be found in recycled paper. We recommend that you use neutralized paper for this printer.

You can use an acid paper check pen to distinguish acid paper from neutral paper.

Print surface

The characteristics of the face side and reverse side of a sheet of paper may vary a little.

Usually, the opening side of the paper ream package is the print side. Follow the indications on the paper package. Typically, the print side is indicated by an arrow.

Moisture content

Moisture content is the amount of water left in the paper after manufacture. It is one of the important characteristics of the paper. This can change greatly depending on the storage environment, although usually paper contains about 5% water by weight. Because paper often absorbs water, the amount of water can sometimes be about 10% in a high humidity environment. When the amount of water increases, the characteristics of the paper changes greatly. The fixing of the toner may become worse. For storage of the paper and during use, we recommend that the humidity of the surrounding environment be between 50% and 60%.

Rough estimate of basis weight

g/m^2	lb	
	Bond	**Index**
60	16	
64	17	
75	20	
90	24	
105	28	
120	32	
135	36	
163	43	90
200	53	110

Paper size

Paper size	mm	in.
Letter		8.5 × 11 in.
Legal		8.5 × 14 in.
Executive		7.25 × 10.5 in.
A4	210 × 297 mm	
A5	148 × 210 mm	
A5 (Long Edge)	210 × 148 mm	
A6	105 × 148 mm	
Envelope Monarch		3.875 × 7.5 in.
Envelope Com-10		4.12 × 9.5 in.
Envelope DL	110 × 220 mm	
Envelope C5	162 × 229 mm	
B5 (JIS)	182 × 257 mm	
B5 (ISO)	176 × 250 mm	
B6 (JIS)	128 × 182 mm	
B6 (ISO)	125 × 176 mm	
Folio		8.5 × 13 in.
A4 Long	210 × 405 mm	
Envelope DL-L	220 × 110 mm	
3 × 5		3 × 5 in.
Hagaki [1]	100 × 148 mm	

[1] Postcard with the size specified by Japan Post Service Co., LTD

Symbol and character sets (HL-3075CW only)

For the HP LaserJet emulation modes, you can choose the symbol and character sets using a Web Based Management (Web browser) or the control panel buttons.

How to use Web Based Management (web browser)

To use Web Based Management (Web browser), follow the steps below.

Note

We recommend Internet Explorer® 6.0 (or greater) or Firefox 1.0 (or greater) for Windows® and Safari 4.0/5.0 (or greater) for Macintosh. Please also make sure that JavaScript and cookies are always enabled in whichever browser you use. To use a web browser, you will need to know the IP address of the print server.

1. Start your web browser.
2. Type "`http://printer's IP address/`" into your browser. (Where "`printer's IP address`" is the printer's IP address)
   - For example:

     `http://192.168.1.2/`

Note

- If you have edited the hosts file on your computer or are using a Domain Name System (DNS), you can also enter the DNS name of the print server.
- For windows® users, as the print server supports TCP/IP and NetBIOS, you can also enter the NetBIOS name of the print server. The NetBIOS name can be seen on the printer settings page. The NetBIOS name assigned is the first 15 characters of the node name and by default it will appear as "BRNxxxxxxxxxxxx" for a wired network or "BRWxxxxxxxxxxxx" for a wireless network.
- For Macintosh users, you can also have easy access to Web Based Management by clicking the machine icon on **Status Monitor** screen.

3. Click **Printer Settings**.
4. Enter a user name and a password.

Note

The login name for the Administrator is "`admin`" (case sensitive) and the default password is "`access`".

5. Click **OK**.
6. Choose the **HP LaserJet** tab and click **Font Setup**. Choose a symbol set you want to use from the **Symbol Set** list box.

Symbol and character sets list

OCR symbol sets

When you choose the OCR-A or OCR-B font, the matching symbol set is always used.

OCR A (0O)

OCR B (1O)

HP LaserJet mode

ABICOMP Brazil / Portugal (13P)
ABICOMP International (14P)
Desktop (7J)
Greek8 (8G)
HP German (0G)
HP Spanish (1S)
ISO Latin1 (0N)
ISO Latin2 (2N)
ISO Latin5 (5N)
ISO Latin6 (6N)
ISO2 IRV (2U)
ISO4 UK (1E)
ISO5 ASCII (0U)
ISO10 Swedish (3S)
ISO11 Swedish (0S)
ISO14 JIS ASCII (0K)
ISO15 Italian (0I)
ISO16 Portuguese (4S)
ISO17 Spanish (2S)
ISO21 German (1G)
ISO25 French (0F)
ISO57 Chinese (2K)
ISO60 Norwegian1 (0D)
ISO61 Norwegian2 (1D)
ISO69 French (1F)
ISO84 Portuguese (5S)
ISO85 Spanish (6S)
ISO8859 / 7 Latin / Greek (12N)
ISO8859 / 15 Latin (9N)
ISO8859 / 15 Latin / Cyrillic (10N)
Legal (1U)
Math-8 (8M)
MC Text (12J)
MS Publishing (6J)
PC8 (10U)
PC8 Bulgarian (13R)
PC8 D/N (11U)
PC8 Greek Alternate (437G) (14G)
PC8 Latin / Greek (12G)
PC8 PC Nova (27Q)
PC8 Turkish (9T)
PC775 (26U)
PC850 Multilingual (12U)
PC851 Greece (10G)
PC852 East Europe (17U)
PC853 Latin3 (Turkish) (18U)
PC855 Cyrillic (10R)
PC857 Latin5 (Turkish) (16U)
PC858 Multilingual Euro (13U)
PC860 Portugal (20U)
PC861 Iceland (21U)
PC863 Canadian French (23U)
PC865 Nordic (25U)
PC866 Cyrillic (3R)
PC869 Greece (11G)
PC1004 (9J)
Pi Font (15U)
PS Math (5M)

HP LaserJet mode

PS Text (10J)
Roman9 (4U)
Russian-GOST (12R)
Roman8 (8U)
Roman Extension (0E)
Symbol (19M)

Quick reference for bar code control commands (HL-3075CW only)

The printer can print bar codes in the HP LaserJet emulation modes.

Print bar codes or expanded characters

Code	ESC i
Dec	27 105
Hex	1B 69

Format: ESC i n ... n \

Creates bar codes or expanded characters according to the segment of parameters ‘n ... n’. For more information about parameters, see the following Definition of Parameters. This command must end with the ‘ \ ’ code (5CH).

Definition of parameters

This bar code command can have the following parameters in the parameter segment (n ... n). As parameters are effective within the single command syntax ESC i n ... n \, they do not apply in the bar code commands. If certain parameters are not given, they take the preset settings. The last parameter must be the bar code data start (‘b’ or ‘B’) or the expanded character data start (‘l’ or ‘L’). Other parameters can be given in any sequence. Each parameter can start with a lower-case or upper-case character, for example, ‘t0’ or ‘T0’, ‘s3’ or ‘S3’ and so one.

Bar code mode

n = ‘t0’ or ‘T0’	CODE 39 (default)
n = ‘t1’ or ‘T1’	Interleaved 2 of 5
n = ‘t3’ or ‘T3’	FIM (US-Post Net)
n = ‘t4’ or ‘T4’	Post Net (US-Post Net)
n = ‘t5’ or ‘T5’	EAN 8, EAN 13, or UPC A
n = ‘t6’ or ‘T6’	UPC E
n = ‘t9’ or ‘T9’	Codabar
n = ‘t12’ or ‘T12’	Code 128 set A
n = ‘t13’ or ‘T13’	Code 128 set B
n = ‘t14’ or ‘T14’	Code 128 set C
n = ‘t130’ or ‘T130’	ISBN (EAN)
n = ‘t131’ or ‘T131’	ISBN (UPC-E)
n = ‘t132’ or ‘T132’	EAN 128 set A
n = ‘t133’ or ‘T133’	EAN 128 set B

n = ‘t134’ or ‘T134’	EAN 128 set C

This parameter selects the bar code mode as shown above. When n is ‘t5’ or ‘T5’ the bar code mode (EAN 8, EAN 13, or UPC A) varies according to the number of characters in the data.

Bar code, expanded character, line block drawing and box drawing

n = ‘s0’ or ‘S0’	3: 1 (default)
n = ‘s1’ or ‘S1’	2: 1
n = ‘s3’ or ‘S3’	2.5: 1

This parameter chooses the bar code style as above. When the EAN 8, EAN 13, UPC-A, Code 128 or EAN 128 bar code mode is chosen, this bar code style parameter is ignored.

Expanded Character

‘S’

0 = White

1 = Black

2 = Vertical stripes

3 = Horizontal stripes

4 = Cross hatch

For example ‘S’ n1 n2

n1 = Background fill pattern

n2 = Foreground fill pattern

If ‘S’ is followed by only one parameter, the parameter is a foreground fill pattern.

Line block drawing & box drawing

‘S’

1 = Black

2 = Vertical stripes

3 = Horizontal stripes

4 = Cross hatch

Bar code

n = ‘mnnn’ or ‘Mnnn’ (nnn = 0 ~ 32767)

This parameter shows the bar code width. The unit of ‘nnn’ is a percentage.

Bar code human readable line ON or OFF

n = ‘r0’ or ‘R0	Human readable line OFF
n = ‘r1’ or ‘R1	Human readable line ON

Preset:	Human readable line ON
	(1) ‘T5’ or ‘t5’
	(2) ‘T6’ or ‘t6’
	(3) ‘T130’ or ‘t130’
	(4) ‘T131’ or ‘t131’
Preset:	Human readable line OFF
	All others

This parameter shows whether the printer prints the human readable line below the bar code. Human readable characters are always printed with OCR-B font of 10 pitch and all the current character style enhancements are masked. The default setting is determined by the bar code mode selected by ‘t’ or ‘T’.

Quiet zone

n = ‘onnn’ or ‘Onnn’ (nnn = 0 ~ 32767)

Quiet zone is the space on both sides of the bar codes. Its width can be shown using the units that are set by the ‘u’ or ‘U’ parameter. (For the description of ‘u' or ‘U' parameter, see the next section.) The default setting of the quiet-zone width is 1 inch.

Bar code, expanded character unit, line block drawing and box drawing

n = ‘u0’ or ‘U0’	mm (preset)
n = ‘u1’ or ‘U1’	1/10
n = ‘u2’ or ‘U2’	1/100
n = ‘u3’ or ‘U3’	1/12
n = ‘u4’ or ‘U4’	1/120
n = ‘u5’ or ‘U5’	1/10 mm
n = ‘u6’ or ‘U6’	1/300
n = ‘u7’ or ‘U7’	1/720

This parameter shows the measurement units of X-axis offset, Y-axis offset, and bar code height.

Bar code, expanded character, line block drawing and box drawing offset in X-axis

n = ‘xnnn’ or ‘Xnnn’

This parameter shows the offset from the left margin in the ‘u’- or ‘U’-specified unit.

Bar code & expanded character offset in Y-axis

n = ‘ynnn’ or ‘Ynnn’

This parameter shows the downward offset from the current print position in the ‘u’- or ‘U’-specified unit.

Bar code, expanded character, line block drawing and box drawing height

n = ‘hnnn’, ‘Hnnn’, ‘dnnn’, or ‘Dnnn’

1 EAN13, EAN8, UPC-A, ISBN (EAN13, EAN8, UPC-A), ISBN (UPC-E): 22 mm

2 UPC-E: 18 mm

3 Others: 12 mm

Expanded characters → 2.2 mm (preset)

Line block drawing and box drawing → 1 dot

This parameter shows the height of bar codes or expanded characters as shown above. It can start with ‘h’, ‘H’, ‘d’, or ‘D’. The height of bar codes is shown in the ‘u’- or ‘U’-specified unit. The default setting of the bar code height (12 mm, 18 mm or 22 mm) is determined by the bar code mode selected by ‘t’ or ‘T’.

Expanded character width, line block drawing and box drawing

n = ‘wnnn’ or ‘Wnnn’

Expanded character → 1.2 mm

Line block drawing and box drawing → 1 dot

This parameter shows the width of expanded characters as shown above.

Expanded character rotation

n = ‘a0’ or ‘A0’	‘Upright (preset)
n = ‘a1’ or ‘A1’	‘Rotated 90 degrees
n = ‘a2’ or ‘A2’	‘Upside down, rotated 180 degrees
n = ‘a3’ or ‘A3’	‘Rotated 270 degrees

Bar code data start

n = ‘b’ or ‘B’

Data that follows ‘b’ or ‘B’ is read in as bar code data. Bar code data must end with the ‘ \ ’ code (5CH), which also ends this command. The acceptable bar code data is determined by the bar code mode selected by ‘t’ or ‘T’.

- When CODE 39 is chosen with the parameter ‘t0’ or ‘T0’

  Forty three characters ‘0’ to ‘9’, ‘A’ to ‘Z’, ‘-’, ‘ . ’, ‘ (space)’, ‘$’, ‘ / ’, ‘+’, and ‘%’ can be accepted as bar code data. Other characters will cause a data error. The number of characters for bar codes is not limited. The bar code data automatically starts and ends with an asterisk ‘ * ’ (start character and stop character). If the received data has an asterisk ‘ * ’ at the beginning or end, the asterisk is regarded as a start character or stop character.

- When Interleaved 2 of 5 is selected with the parameter ‘t1’ or ‘T1’:

  Ten numerical characters ‘0’ to ‘9’ can be accepted as bar code data. Other characters cause a data error. The number of characters for bar codes is not limited. This mode of bar codes needs even characters. If the bar code data has odd characters, ‘0’ is automatically added to the end of the bar code data.

- When FIM (US-Post Net) is selected with the parameter ‘t3’ or ‘T3’

  Characters ‘A’ to ‘D’ are valid and one digit of data can be printed. Upper-case and lower-case alphabet characters can be accepted.

- When Post Net (US-Post Net) is selected with the parameter ‘t4’ or ‘T4’

  Numbers ‘0’ to ‘9' can be data and it must end with a check digit. ‘?’ can be used instead of the check digit.

- When EAN 8, EAN 13, or UPC A is selected with the parameter ‘t5’ or ‘T5’

  Ten numbers ‘0’ to ‘9’ can be accepted as bar code data. The number of characters for bar codes is limited as follows:

  EAN 8: Total 8 digits (7 digits + 1 check digit)

  EAN 13: Total 13 digits (12 digits + 1 check digit)

  UPC A: Total 12 digits (11 digits + 1 check digit)

  A number of characters other than those stated above will cause a data error that results in the bar code data being printed as normal print data. If the check digit is not correct, the printer decides the correct check digit automatically so that the correct bar code data will be printed. When EAN13 is selected, adding ‘+’ and a two-digit or five-digit number after the data can create an add-on code.

- When UPC-E is selected with the parameter ‘t6’ or ‘T6’:

  The numbers ‘0’ to ‘9’ can be accepted as bar code data.

Eight digits [1] [2]	(standard format) The first character must be ‘0’ and the data must end with a check digit. Total eight digits = ‘0’ plus 6 digits plus 1 check digit.
Six digits [2]	The first character and the last check digit are removed from the eight digit data.

[1] ‘?’ can be used instead of a check digit.

[2] Adding ‘+’ and two-digit or five-digit number after the data creates an add-on code.

- When Codebar is chosen with the parameter ‘t9’ or ‘T9’

  Characters ‘0’ to ‘9’, ‘-’, ‘ . ’, ‘$’, ‘/’, ‘+’, ‘ : ’ can be printed. Characters ‘A’ to ‘D’ can be printed as a start-stop code, which can be upper case or lower case. If there is no start-stop code, errors will happen. A check digit cannot be added and using ‘?’ causes errors.

- When Code 128 Set A, Set B, or Set C is selected with the parameter ‘t12’ or ‘T12’, ‘t13’ or ‘T13’, or ‘t14’ or ‘T14’

  Code 128 sets A, B and C can be individually selected. Set A shows characters Hex 00 to 5F. Set B includes characters Hex 20 to 7F. Set C includes the pairs 00 to 99. Switching is allowed between the code sets by sending %A, %B, or %C. FNC 1, 2, 3, and 4 are produced with %1, %2, %3, and %4. The SHIFT code, %S, allows temporary switching (for one character only) from set A to set B and vice versa. The ‘%’ character can be encoded by sending it twice.

- When ISBN (EAN) is selected with the parameter ‘t130’ or ‘T130’

  The same rules apply as for ‘t5’ or ‘T5’.

- When ISBN (UPC-E) is selected with the parameter ‘t131’ or ‘T131’:

  The same rules apply as for ‘t6’ or ‘T6’.

- When EAN 128 set A, set B or set C is selected with the parameter ‘t132’ or ‘T132’, ‘t133’ or ‘T133’ or ‘t134’ or ‘T134’

  The same rules apply as for ‘t12’ or ‘T12’, ‘t13’ or ‘T13’, or ‘t14’ or ‘T14’.

Box drawing

ESC i ... E (or e)

‘E’ or ‘e’ is a terminator.

Line block drawing

ESC i ... V (or v)

‘V’ or ‘v’ is a terminator.

Expanded character data start

n = ‘l’ or ‘L’

Data that follows ‘l’ or ‘L’ is read as expanded character data (or labeling data). Expanded character data must end with the ‘ \ ’ code (5CH), which also ends this command.

Table of Code(EAN) 128 set C

Code(EAN) 128 set C describes an original command. The correspondence table is as follows.

0	00	NUL	0x00
1	01	SOH	0x01
2	02	ST	

52	52	4	0x34
53	53	5	0x35

A

Example Program Listings

```
WIDTH "LPT1:",255
'CODE 39
LPRINT CHR$(27);"it0r1s0o0x00y00bCODE39?\";
'Interleaved 2 of 5
LPRINT CHR$(27);"it1r1s0o0x00y20b123456?\";
'FIM
LPRINT CHR$(27);"it3r1o0x00y40bA\";
'Post Net
LPRINT CHR$(27);"it4r1o0x00y60b1234567890?\";
'EAN-8
LPRINT CHR$(27);"it5r1o0x00y70b1234567?\";
'UPC-A
LPRINT CHR$(27);"it5r1o0x50y70b12345678901?\";
'EAN-13
LPRINT CHR$(27);"it5r1o0x100y70b123456789012?\";
'UPC-E
LPRINT CHR$(27);"it6r1o0x150y70b0123456?\";
'Codabar
LPRINT CHR$(27);"it9r1s0o0x00y100bA123456A\";
'Code 128 set A
LPRINT CHR$(27);"it12r1o0x00y120bCODE128A12345?\";
'Code 128 set B
LPRINT CHR$(27);"it13r1o0x00y140bCODE128B12345?\";
'Code 128 set C
LPRINT CHR$(27);"it14r1o0x00y160b";CHR$(1);CHR$(2);"?\";
'ISBN(EAN)
LPRINTCHR$(27);"it130r1o0x00y180b123456789012?+12345\";
'EAN 128 set A
LPRINT CHR$(27);"it132r1o0x00y210b1234567890?\";
LPRINT CHR$(12)
END
```

Libtiff Copyright and License

Use and Copyright

Copyright© 1988-1997 Sam Leffler
Copyright© 1991-1997 Silicon Graphics, Inc.

Permission to use, copy, modify, distribute, and sell this software and its documentation for any purpose is hereby granted without fee, provided that (i) the above copyright notices and this permission notice appear in all copies of the software and related documentation, and (ii) the names of Sam Leffler and Silicon Graphics may not be used in any advertising or publicity relating to the software without the specific, prior written permission of Sam Leffler and Silicon Graphics.

THE SOFTWARE IS PROVIDED "AS-IS" AND WITHOUT WARRANTY OF ANY KIND, EXPRESS, IMPLIED OR OTHERWISE, INCLUDING WITHOUT LIMITATION, ANY WARRANTY OF MERCHANTABILITY OR FITNESS FOR A PARTICULAR PURPOSE.

IN NO EVENT SHALL SAM LEFFLER OR SILICON GRAPHICS BE LIABLE FOR ANY SPECIAL, INCIDENTAL, INDIRECT OR CONSEQUENTIAL DAMAGES OF ANY KIND, OR ANY DAMAGES WHATSOEVER RESULTING FROM LOSS OF USE, DATA OR PROFITS, WHETHER OR NOT ADVISED OF THE POSSIBILITY OF DAMAGE, AND ON ANY THEORY OF LIABILITY, ARISING OUT OF OR IN CONNECTION WITH THE USE OR PERFORMANCE OF THIS SOFTWARE.

B Appendix (for Europe and Other Countries)

Brother numbers

IMPORTANT

For technical and operational help, you must call the country where you bought the printer. Calls must be made ***from within*** that country.

Register your product

By registering your Brother product, you will be recorded as the original owner of the product.

Your registration with Brother:

- may serve as a confirmation of the purchase date of your product should you lose your receipt;
- may support an insurance claim by you in the event of product loss covered by insurance; and,
- will help us to notify you of enhancements to your product and special offers.

Please complete the Brother Warranty Registration or, for your convenience and most efficient way to register your new product, register on-line at

http://www.brother.com/registration/

Frequently asked questions (FAQs)

The Brother Solutions Center is our one-stop resource for all your printer needs. You can download the latest drivers, software and utilities, read FAQs and troubleshooting tips to learn how to get the most from your Brother product.

http://solutions.brother.com/

You can check here for Brother driver updates.

Customer Service

Visit http://www.brother.com/ for contact information on your local Brother office.

Service center locations

For service centres in Europe, contact your local Brother Office. Address and telephone contact information for European offices can be found at http://www.brother.com/ by selecting your country.

Internet Addresses

Brother Global Web Site: http://www.brother.com/

For Frequently Asked Questions (FAQs), Product Support and Technical Questions, and Driver Updates and Utilities: http://solutions.brother.com/

C Appendix (for USA and Canada)

Brother numbers

IMPORTANT

For technical and operational help, you must call the country where you bought the printer. Calls must be made ***from within*** that country.

Register your product

By registering your product with Brother International Corporation, you will be recorded as the original owner of the product.

Your registration with Brother:

- may serve as a confirmation of the purchase date of your product should you lose your receipt;
- may support an insurance claim by you in the event of product loss covered by insurance; and,
- will help us notify you of enhancements to your product and special offers.

Please complete the Brother Warranty Registration or, for your convenience and most efficient way to register your new product, register on-line at

http://www.brother.com/registration/

FAQs (frequently asked questions)

The Brother Solutions Center is our one-stop resource for all your printer needs. You can download the latest software and utilities and read FAQs and troubleshooting tips to learn how to get the most from your Brother product.

http://solutions.brother.com/

You can check here for Brother driver updates.

Customer Service

In USA:	1-877-BROTHER (1-877-276-8437)
In Canada:	1-877-BROTHER

If you have comments or suggestions, please write us at:

In USA:	Printer Customer Support Brother International Corporation 7905 North Brother Boulevard Bartlett, TN 38133
In Canada:	Brother International Corporation (Canada), Ltd. - Marketing Dept. 1, rue Hotel de Ville Dollard-des-Ormeaux, PQ, Canada H9B 3H6

Service center locator (USA only)

For the location of a Brother authorized service center, call 1-877-BROTHER (1-877-276-8437).

Service center locations (Canada only)

For the location of a Brother authorized service center, call 1-877-BROTHER

Internet addresses

Brother Global Web Site: http://www.brother.com/

For Frequently Asked Questions (FAQs), Product Support and Technical Questions, and Driver Updates and Utilities: http://solutions.brother.com/

For Brother Accessories & Supplies:

In USA: **http://www.brothermall.com/**
In Canada: **http://www.brother.ca/**

Ordering supplies

For best quality results use only genuine Brother supplies, which are available at most Brother retailers. If you cannot find the supplies you need and you have a Visa, MasterCard, Discover, or American Express credit card, you can order supplies directly from Brother. (You can visit us online for a complete selection of the Brother accessories and supplies that are available for purchase.)

In USA: 1-877-BROTHER (1-877-552-6255)
1-800-947-1445 (fax)
http://www.brothermall.com/

In Canada: 1-877-BROTHER
http://www.brother.ca/

Description	Item
Toner Cartridge <Black>	TN-210BK (Approx. 2,200 pages) [1 2]
Toner Cartridge <Cyan>	TN-210C (Approx. 1,400 pages) [1 2]
Toner Cartridge <Magenta>	TN-210M (Approx. 1,400 pages) [1 2]
Toner Cartridge <Yellow>	TN-210Y (Approx. 1,400 pages) [1 2]
4 pc. Drum Unit	DR-210CL (Approx. 15,000 pages ea. drum unit) [1 3 4]
1 pc. Drum Unit <Black>	DR-210CL-BK (Approx. 15,000 pages ea.) [1 3 4]
1 pc. Drum Unit <Color>	DR-210CL-CMY (Approx. 15,000 pages ea.) [1 3 4]
Waste Toner Box	WT-200CL (Approx. 50,000 pages) [1]
Belt Unit	BU-200CL (Approx. 50,000 pages) [1]

[1] A4 or Letter size single-sided pages.

[2] Approx. cartridge yield is declared in accordance with ISO/IEC 19798.

[3] 1 page per job.

[4] Drum life is approximate and may vary by type of use.

D Index

Symbols

+ or - buttons 75

A

Auto Registration 96
Automatic Emulation Selection 73
Automatic Interface Selection 73

B

Back button 76
Back light 77
Bar code control 175
Belt unit 117
Booklet printing 22, 39
BRAdmin Light 71
BRAdmin Professional 71
Brother Numbers (Europe and other countries) 184
Brother Numbers (USA/Canada) 185, 186, 187
BRPrint Auditor 72
BR-Script 3 mode 73
BR-Script3 ..... 48, 65, 161
Buttons 74

C

Calibration 43, 95
Call Service messages 144
Cancel button 74
Character sets 172
Cleaning 127
Color Correction 89
Computer requirements 168
Consumable items 101, 102
Control panel 74, 81, 165
Control panel LCD menu 82
Corona wire 107, 130, 132

D

Data LED 76
Default settings 93
Dimensions 166
DIMM 98
Direct Print 27, 90, 164
Domain 172
Driver Deployment Wizard 72
Drum unit 111
Duplex printing 18

E

Emulation 163
Emulation modes 73
Envelopes 3, 13, 17
Error and maintenance messages 142
Error LED 76

F

FAQs (Frequently Asked Questions) 185
Fonts 163

G

General Setup 84
Go button 74

H

HP LaserJet mode 73

I

Interface 163

J

Jam Inside 150
Jam Rear 148
Jam Tray 1 147

L

Labels 2, 13
LCD (liquid crystal display) 74, 76
LED (light-emiting diode) 76
LED head 129
Linux® 32

M

Machine information 82
Macintosh 32, 55, 161
Maintenance messages 144
Manual duplex printing 19, 20, 39, 63
Manual feed slot 9, 20
Manual Registration 97
Media specifications 165
Media type 1
Memory 98, 163
Menu settings 82

N

Network connectivity 163
NETWORK menu 87, 88
Network software 71

P

Paper 1, 169
Paper handling 165
Paper jams 146
Paper Tray 83
PCL printer driver 35
PictBridge 23, 91
Plain paper 2
Print Menu 84
Print quality 37
Printer driver 32, 35, 48, 69, 164
Processor 163

R

Register your product 184, 185
Reprint 43, 78
Reset Menu 89

S

Secure data 79
Secure Print 74, 75
Service centers (USA/Canada) 186
Service centres (Europe and other countries) 184
SO-DIMM 98
Software 71
Specifications 162
Status Monitor 64
Supplies (USA/Canada) 187
Symbol 172

T

TCP/IP 87, 88
Thick paper 13
Toner cartridge 103, 104, 108
Tray Settings 45
Troubleshooting 141

U

Unprintable area 4
USB Auto Interface Selection 73
USB direct interface 24, 27, 29
USB flash memory drive 27, 29, 143
Utilities 164, 184, 185

W

Waste toner box 121
Watermark 40, 41, 42
Web Based Management 72
Web BRAdmin 71
Weights 166
Windows® 35
WLAN 88, 89, 92

D