brother®

Brother Laser Printer

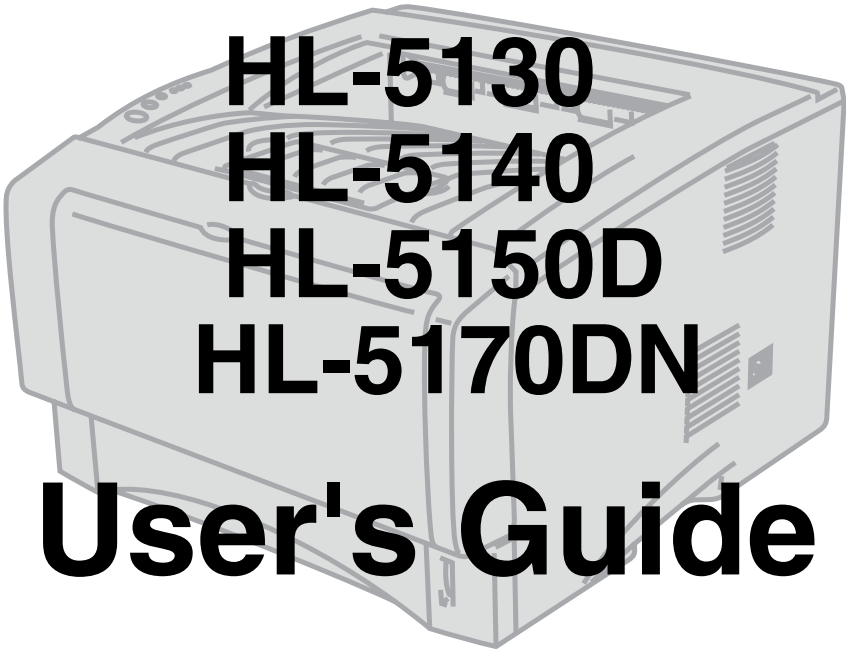

HL-5130
HL-5140
HL-5150D
HL-5170DN

User's Guide

For visually-impaired users

You can read this manual with Screen Reader ‘text-to-speech’ software.

You must set up the hardware and install the driver before you can use the printer.

Please use the Quick Setup Guide to set up the printer. You can find a printed copy in the box.

Please read this User’s Guide thoroughly before you use the printer. Keep the CD-ROM in a convenient place so you can use it quickly if you need to.

Please visit our web site at http://solutions.brother.com where you can get answers to Frequently Asked Questions (FAQs), Product Support and Technical Questions, and the latest Driver Updates and Utilities.

Version 3

Laser printer

HL-5100 series

User's Guide

Definitions of warnings, cautions, and notes

We use the following terms throughout this User’s Guide:

You must follow these warnings to prevent possible personal injury.

You must follow these instructions to make sure you use the printer properly and do not damage it.

Remember these useful tips when you use the printer.

To use the printer safely

After you have just used the printer, some parts inside the printer will be extremely hot. When you open the front or back cover of the printer, never touch the shaded parts shown in the illustrations below.

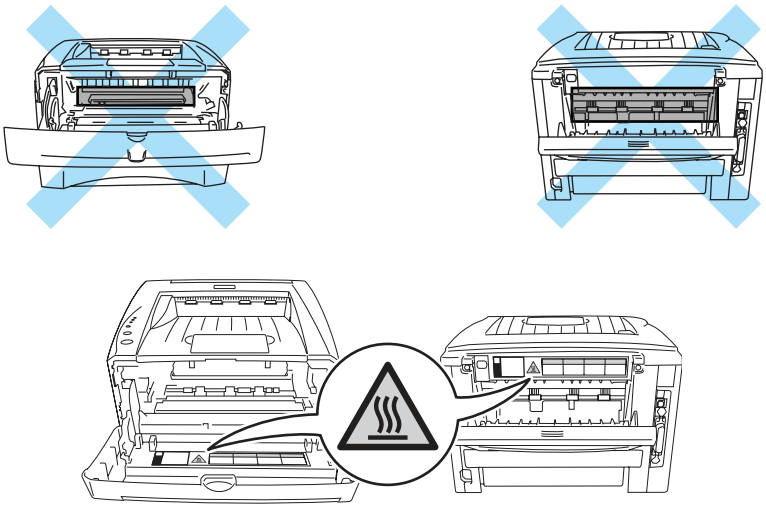

There are high voltage electrodes inside the printer. Before you clean the printer, clear a paper jam or replace parts, make sure you have turned off the power switch and unplugged the printer from the AC power outlet.

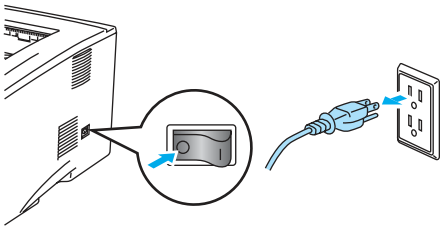

Do not handle the plug with wet hands - it might give you an electrical shock.

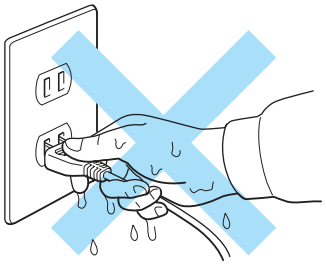

Caution

Use water or neutral detergents for cleaning. Cleaning with volatile liquids such as thinner or benzene will damage the surface of the printer.

Do not use cleaning materials that contain ammonia. They will damage the printer and the toner cartridge.

Trademarks

The Brother logo is a registered trademark of Brother Industries, Ltd.

Apple, the Apple Logo and Macintosh® are registered trademarks in the United States and other countries, and TrueType® is a trademark of Apple Computer, Inc.

Epson is a registered trademark and FX-80 and FX-850 are trademarks of Seiko Epson Corporation.

Hewlett Packard is a registered trademark and HP LaserJet 6P, 6L, 5P, 5L, 4, 4L 4P, III, IIIP, II, and IIP are trademarks of Hewlett-Packard Company.

IBM, IBM PC, and Proprinter are registered trademarks of International Business Machines Corporation.

Microsoft®, MS-DOS®, Windows® and Windows NT® are registered trademarks of Microsoft Corporation in the U.S. and other countries.

PostScript® and PostScript® 3™ are trademarks of Adobe Systems Incorporated.

ENERGY STAR is a U.S. registered mark.

All other terms and brand and product names mentioned in this User's Guide are registered trademarks of their respective companies.

Compilation and Publication Notice

Under the supervision of Brother Industries Ltd., this manual has been compiled and published, covering the latest product's descriptions and specifications.

The contents of this manual and the specifications of this product are subject to change without notice.

Brother reserves the right to make changes without notice in the specifications and materials contained herein and shall not be responsible for any damages (including consequential) caused by reliance on the materials presented, including but not limited to typographical and other errors relating to the publication.

©2004 Brother Industries Ltd.

Shipment of the Printer

If for any reason you must ship your Printer, carefully package the Printer to avoid any damage during transit. We recommend that you save and use the original packaging. The Printer should also be adequately insured with the carrier.

Table of Contents

1 About this printer 1-1
What is in the box? 1-1
Interface cable 1-1
Front view 1-2
Back view 1-3
Positioning the printer 1-4
Power supply 1-4
Environment 1-4
What kind of paper can I use? 1-5
Type and size of paper 1-5
Recommended paper 1-6
Printable area 1-7
Printing methods 1-8
Printing on plain paper 1-8
Printing on plain paper from the paper tray 1-8
Printing on plain paper from the manual feed tray (For HL-5130 and HL-5140) 1-12
Printing on plain paper from the multi-purpose tray (MP tray) (For HL-5150D and HL-5170DN) 1-14
Printing on thicker paper and card stock 1-17
Printing on thicker paper and card stock from the manual feed tray (For HL-5130 and HL-5140) 1-17
Printing on thicker paper and card stock from the multi-purpose tray (MP tray) (For HL-5150D and HL-5170DN) 1-20
Printing on envelopes 1-24
Types of envelopes to avoid 1-24
Printing on envelopes from the manual feed tray (For HL-5130 and HL-5140) 1-25
Printing on envelopes from the MP tray (For HL-5150D and HL-5170DN) 1-29
Printing on transparencies 1-33
Printing on transparencies from the paper tray 1-33
Printing on transparencies from the manual feed tray (For HL-5130 and HL-5140) 1-36
Printing on transparencies from the MP tray (For HL-5150D and HL-5170DN) 1-39
Duplex Printing 1-43
Guidelines for printing on both sides of the paper 1-43
Printing on both sides of the paper (manual duplex printing) 1-43
Manual duplex printing from the paper tray 1-43
Manual duplex printing from the manual feed tray (For HL-5130 and HL-5140) 1-44
Manual duplex printing from the multi-purpose tray (For HL-5150D and HL-5170DN) 1-45
Printing on both sides of the paper (automatic duplex printing) 1-47
Guidelines for automatic duplex printing 1-47

2 Driver and software 2-1
Printer driver 2-1
For Windows® 95/98/Me, Windows NT® 4.0 and Windows® 2000/XP 2-1
For Macintosh® 2-1
For Windows® 2-2
Features in the PCL printer driver 2-2
Features in the PS printer driver 2-11
For Macintosh® 2-17
Software 2-20
Software for Networks 2-20
BRAdmin Professional 2-20
Driver Deployment Wizard 2-20
Web BRAdmin 2-20
Automatic Emulation Selection 2-21

3 Control panel 3-1
Service call indications 3-5
Control panel buttons 3-7
Print a test page 3-8
Using control panel button 3-8
Using the printer driver 3-8
Printer Settings 3-9
Using the control panel button 3-9
Using the printer driver 3-9
Print fonts (Not available for HL-5130) 3-10
Using the control panel button 3-10
Using the printer driver (Not available for HL-5130) 3-10
Network factory default setting (For HL-5170DN) 3-11
Disabling the APIPA protocol (For HL-5170DN) 3-11

4 Options 4-1
DIMM 4-1
Installing additional memory 4-2
Lower tray unit (LT-5000) (Not available for HL-5130) 4-4
Print server (NC-2100p) 4-5

5 Routine maintenance 5-1
Toner cartridge 5-2
Toner Low message 5-2
Toner Empty message 5-3
Replacing the toner cartridge 5-3
Drum unit 5-8
Change Drum message 5-8
Replacing the drum unit 5-9
Cleaning 5-12
Replacing periodic maintenance parts 5-13

6 Troubleshooting 6-1
Identifying your problem 6-1
Error messages in the status monitor 6-2
..... 6-3
..... 6-3
Error message printouts 6-3
Paper handling 6-5
Paper jams and how to clear them 6-6
Other problems 6-11
For Macintosh® with USB 6-11
Improving the print quality 6-11
Solving print problems 6-17

7 Appendix A-1
Printer specifications A-1
Important information for choosing your paper A-6

8 Appendix (For Europe and Other Countries) B-1
Brother Numbers B-1
Important information: Regulations B-2
Radio interference (220 to 240 volt model only) B-2
International ENERGY STAR® Compliance Statement B-2
IEC 60825 specification (220 to 240 volt model only) B-3
IMPORTANT - For Your Safety B-4

Geräuschemission / Acoustic noise emission (for Germany only) B-4
Wiring information (for UK) B-5

9 Appendix (For USA and Canada) C-1
Brother Numbers C-1
Register your product C-1
Frequently asked questions (FAQs) C-1
Customer Service C-1
Service center locator (USA only) C-2
Service center locations (Canada only) C-2
Brother fax back system (USA only) C-2
Important information: Regulations C-3
Federal Communications Commission (FCC) Declaration of Conformity (For USA) C-3
Industry Canada Compliance Statement (For Canada) C-4
International ENERGY STAR® Compliance Statement C-4
Laser Notices C-5
Laser Safety (100 to 120 volt model only) C-5
FDA Regulations (100 to 120 volt model only) C-5
IMPORTANT - For Your Safety C-6
Disconnect device C-6
Caution for LAN connection C-6

10 INDEX I-1

1 About this printer

What is in the box?

When you unpack the printer, check to see that you have all of the following parts.

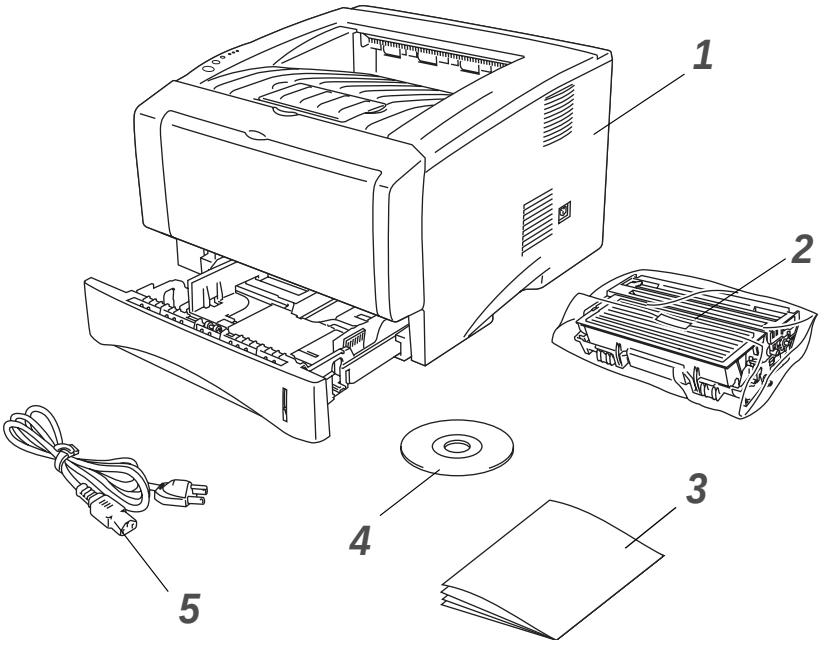

1 Printer
2 Drum unit and toner cartridge assembly
3 Quick Setup Guide
4 CD-ROM
5 AC power cord

Components may differ from one country to another.

The power cord may be slightly different than the one in the figure above, depending on which country the printer was bought in.

Interface cable

- An interface cable is not a standard accessory.
- Some computers have a USB and a parallel port. Please buy the appropriate cable for the interface you are going to use.
- Most parallel cables support bi-directional communication, but some might have an incompatible pin assignment or may not be IEEE 1284-compliant.
- It is recommended to use a Parallel interface cable or USB interface cable that is no longer than 6 feet (2 meters).
- When you use a USB cable, make sure that you connect it to the USB connector of your PC.
- Please make sure that you use a Hi-Speed USB 2.0 certified cable if your computer uses a Hi-Speed USB 2.0 interface.
- Do not connect the USB cable to a non-powered hub or a Mac® keyboard.

Front view

Front View*

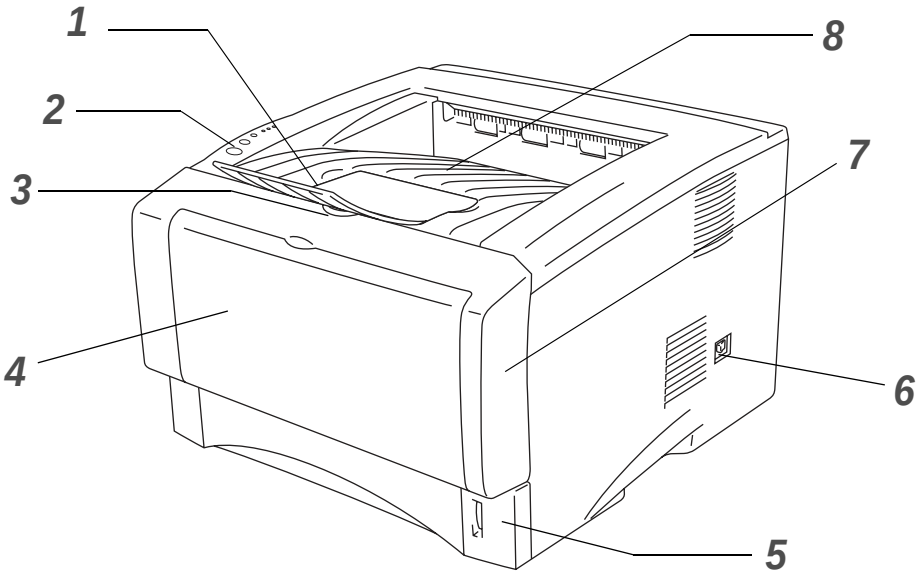

Figure 1-1

1 Face-down Output Tray Support Flap (Support Flap)
2 Control Panel
3 Front Cover Release Button
4 (HL-5130 and HL-5140) Manual Feed Tray
(HL-5150D and HL-5170DN) Multi-purpose Tray (MP Tray)
5 Paper Tray
6 Power Switch
7 Front Cover
8 Face-down Output Tray

* The printer illustration is based on HL-5150D and HL-5170DN.

Back view

Back view*

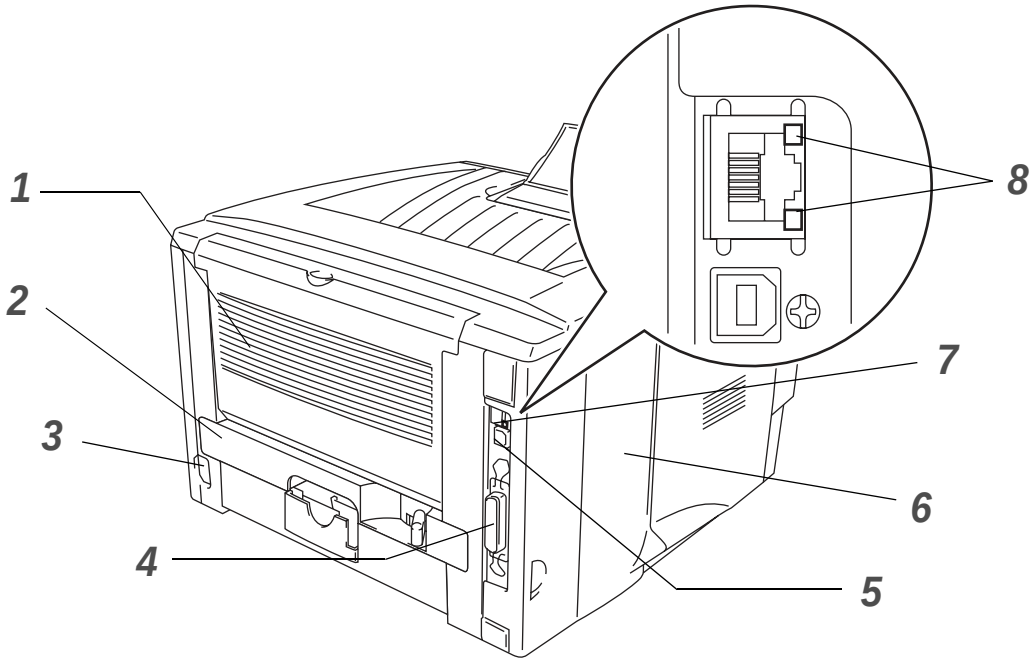

Figure 1-2

1 Face-up Output Tray
2 Duplex Tray (For HL-5150D and HL-5170DN)
3 AC Power Connector
4 Parallel Interface Connector
5 USB Interface Connector
6 Side Cover
7 (HL-5170DN) 10/100BASE-TX Port
8 (HL-5170DN) LED (Light-emitting Diode)

* The printer illustration is based on HL-5170DN.

Positioning the printer

Please read the following before you use the printer.

Power supply

Use the printer within the recommended power range.

Power source:	USA and Canada:	AC 110 to 120 V, 50/60 Hz
	Europe and Australia:	AC 220 to 240 V, 50/60 Hz

The power cord, including extensions, should be no longer than 5 meters (16½ feet).

Do not share the same power circuit with other high-power appliances, such as an air conditioner, copier, shredder and so on. If you cannot avoid using the printer with these appliances, we recommend that you use a voltage transformer or a high-frequency noise filter.

Use a voltage regulator if the power source is not stable.

Environment

- Make sure that the power outlet is near the machine and is easy to get to so that, if there is an emergency, it can be easily unplugged.
- Only use the printer within the following ranges of temperature and humidity:

Temperature: 10 °C to 32.5 °C (50 °F to 90.5 °F)

Humidity: 20% to 80% (without condensation)

- The printer should be used in a well-ventilated room.
- Put the printer on a flat, horizontal surface.
- Keep the printer clean. Do not put the printer in a dusty place.
- Do not put the printer where the ventilation hole of the printer is blocked. Keep a gap of approximately 100 mm (4 in.) between the ventilation hole and the wall.
- Do not put the printer in direct sunlight. If you have to put it near a window, use a blind or a heavy curtain to protect the printer from direct sunlight.
- Do not put the printer near devices that contain magnets or generate magnetic fields.
- Do not subject the printer to strong physical shocks or vibrations.
- Do not expose the printer to open flames or salty or corrosive gasses.
- Do not put objects on top of the printer.
- Do not put the printer near an air conditioner.
- Keep the printer horizontal when you carry it.

What kind of paper can I use?

Type and size of paper

The printer loads paper from the installed paper tray, manual feed tray or optional lower tray unit. The names for the paper trays in the printer driver and this Guide are as follows:

Paper tray	Tray 1
Manual feed tray	Manual (HL-5130 and HL-5140)
Multi-purpose tray (MP tray)	MP Tray (HL-5150D and HL-5170DN)
Optional lower tray unit	Tray 2 (Not available for HL-5130)

While looking at this page on the CD-ROM, you can jump to the page for each printing method by clicking ⓘ in the table.

Media type	Tray 1	Manual feed tray	MP tray	Tray 2	Select the Media type from the printer driver
Plain paper 60 g/m^2 to 105 g/m^2 (16 to 28 lb)	ⓘ	ⓘ	ⓘ	ⓘ	Plain paper
Recycled paper	ⓘ	ⓘ	ⓘ	ⓘ	
Bond paper		ⓘ	ⓘ		Bond paper
Thick paper 105 g/m^2 to 161 g/m^2 (28 to 43 lb)		ⓘ	ⓘ		Thick paper or Thicker paper
Transparency	ⓘ Up to 10 sheets A4 or Letter	ⓘ A4 or Letter	ⓘ Up to 10 sheets A4 or Letter		Transparencies
Labels		ⓘ A4 or Letter	ⓘ A4 or Letter		Thicker paper
Envelopes		ⓘ	ⓘ Up to 3 envelopes		Envelopes Envelopes - Thin Envelopes - Thick
Card stock		ⓘ	ⓘ		Thick paper or Thicker paper

	Tray 1	Manual feed tray	MP tray	Tray 2
Paper size	A4, Letter, Legal, B5 (ISO), Executive, A5, A6, B6	Width: 69.9 to 215.9 mm (2.75 to 8.5 in.) Length: 116 to 406.4 mm (4.57 to 16 in.)	Width: 69.9 to 215.9 mm (2.75 to 8.5 in.) Length: 116 to 406.4 mm (4.57 to 16 in.)	A4, Letter, Legal, B5 (ISO), Executive, A5
Number of sheets	250 sheets (80 g/m^2 or 21 lb)	Single sheet	50 sheets (80 g/m^2 or 21 lb)	250 sheets (80 g/m^2 or 21 lb)

Recommended paper

	Europe	USA
Plain paper	Xerox Premier 80 g/m^2 Xerox Business 80 g/m^2 Modo DATACOPY 80 g/m^2 IGEPA X-Press 80 g/m^2	Xerox 4200DP 20 lb Hammermill Laser Paper 24 lb
Recycled paper	Xerox Recycled Supreme 80 g/m^2	
Transparency	3M CG3300	3M CG 3300
Labels	Avery laser label L7163	Avery laser label #5160

- Before you buy a lot of paper, please test some to make sure that the paper is suitable.
- Use paper that is made for plain-paper copying.
- Use paper that is 75 to 90 g/m^2 (20 to 24 lb).
- Use neutral paper. Do not use acidic or alkaline paper.
- Use long-grain paper.
- Use paper with a moisture content of approximately 5%.
- This printer can use recycled paper that meets the DIN 19309 specification.

Caution

Do not use ink jet paper, or it may cause a paper jam and damage your printer.

To help you choose which paper to use with this printer, see *Important information for choosing your paper* on page A-6.

Printable area

When using PCL emulation, the edges of the paper that cannot be printed on are shown below.

Portrait

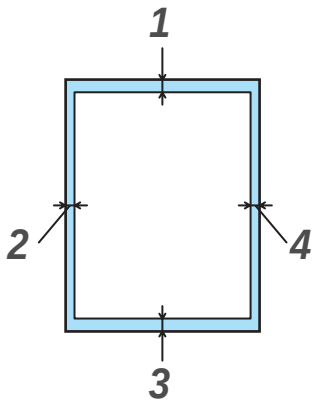

Figure 1-3

	A4	Letter	Legal	B5 (ISO)	Executive	A5	A6	B6
1	4.2 mm (0.17 in.)	4.2 mm (0.17 in.)	4.2 mm (0.17 in.)	4.2 mm (0.17 in.)	4.2 mm (0.17 in.)	4.2 mm (0.17 in.)	4.2 mm (0.17 in.)	4.2 mm (0.17 in.)
2	6.01 mm (0.24 in.)	6.35 mm (0.25 in.)	6.35 mm (0.25 in.)	6.01 mm (0.24 in.)	6.35 mm (0.25 in.)	6.01 mm (0.24 in.)	6.01 mm (0.24 in.)	6.01 mm (0.24 in.)
3	4.2 mm (0.17 in.)	4.2 mm (0.17 in.)	4.2 mm (0.17 in.)	4.2 mm (0.17 in.)	4.2 mm (0.17 in.)	4.2 mm (0.17 in.)	4.2 mm (0.17 in.)	4.2 mm (0.17 in.)
4	6.01 mm (0.24 in.)	6.35 mm (0.25 in.)	6.35 mm (0.25 in.)	6.01 mm (0.24 in.)	6.35 mm (0.25 in.)	6.01 mm (0.24 in.)	6.01 mm (0.24 in.)	6.01 mm (0.24 in.)

Landscape

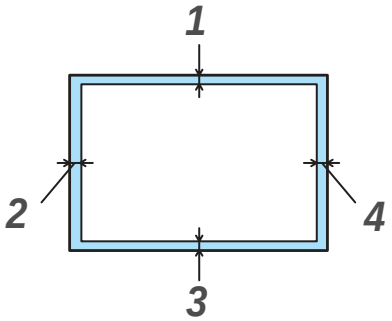

Figure 1-4

	A4	Letter	Legal	B5 (ISO)	Executive	A5	A6	B6
1	4.2 mm (0.17 in.)	4.2 mm (0.17 in.)	4.2 mm (0.17 in.)	4.2 mm (0.17 in.)	4.2 mm (0.17 in.)	4.2 mm (0.17 in.)	4.2 mm (0.17 in.)	4.2 mm (0.17 in.)
2	5.0 mm (0.19 in.)	5.08 mm (0.2 in.)	5.08 mm (0.2 in.)	5.0 mm (0.19 in.)	5.08 mm (0.2 in.)	5.0 mm (0.19 in.)	5.0 mm (0.19 in.)	5.0 mm (0.19 in.)
3	4.2 mm (0.17 in.)	4.2 mm (0.17 in.)	4.2 mm (0.17 in.)	4.2 mm (0.17 in.)	4.2 mm (0.17 in.)	4.2 mm (0.17 in.)	4.2 mm (0.17 in.)	4.2 mm (0.17 in.)
4	5.0 mm (0.19 in.)	5.08 mm (0.2 in.)	5.08 mm (0.2 in.)	5.0 mm (0.19 in.)	5.08 mm (0.2 in.)	5.0 mm (0.19 in.)	5.0 mm (0.19 in.)	5.0 mm (0.19 in.)

Printing methods

Printing on plain paper

You can print on plain paper from the paper tray or manual feed tray. For the paper you want to use, see *What kind of paper can I use?* on page 1-5.

Printing on plain paper from the paper tray

Illustrations in this section are based on HL-5150D and HL-5170DN.

1 Select the **Paper Size**, **Media Type**, **Paper Source**, and other settings in the printer driver.
Media Type: Plain Paper
Paper Source: Tray1

PCL driver

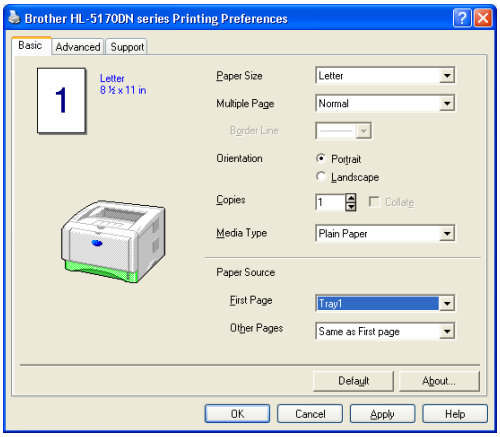

PS driver (For HL-5150D and HL-5170DN)

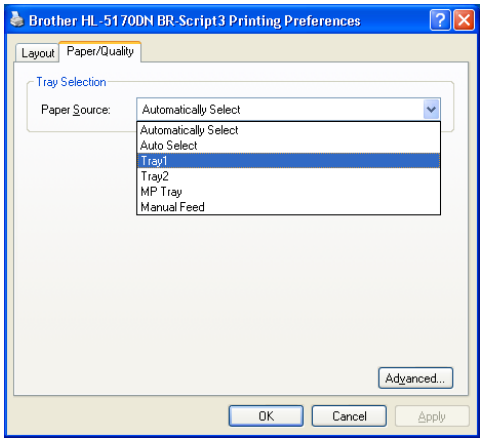

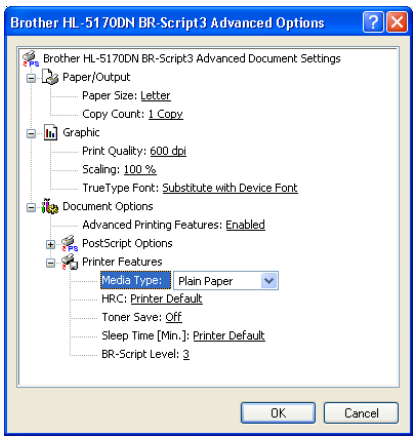

2 Pull the paper tray completely out of the printer.

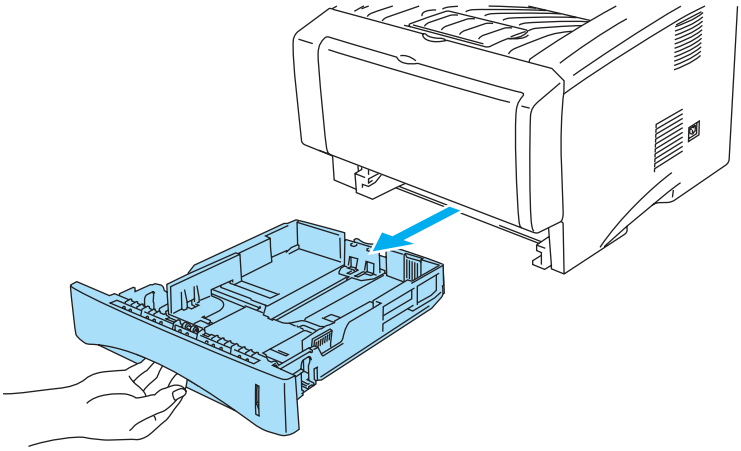

Figure 1-5

3 While pressing the blue paper-guide release lever, slide the paper guides to fit the paper size. Check that the guides are firmly in the slots.

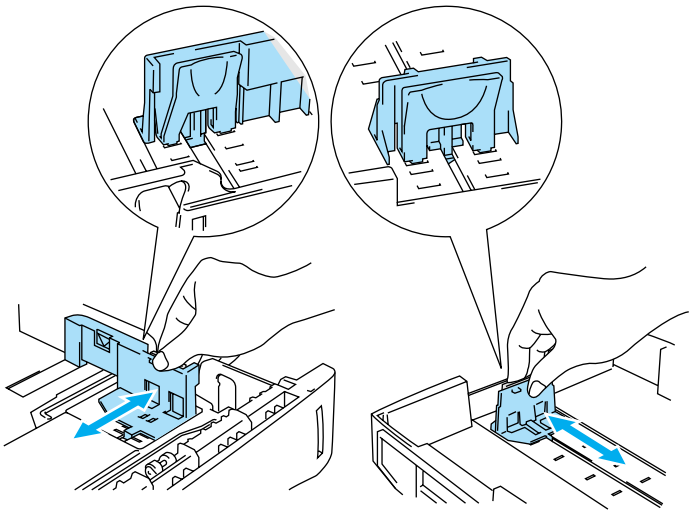

Figure 1-6

4 Put paper in the tray. Check that the paper is flat in the tray at all four corners.

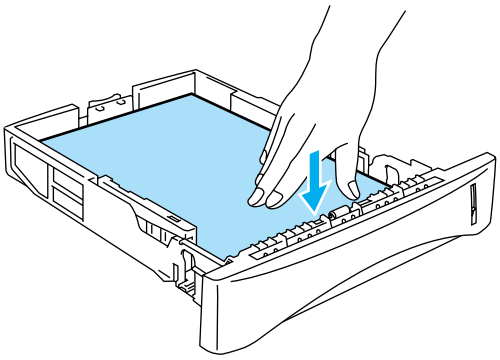

Figure 1-7

Do not put more than 250 sheets of paper (80 g/m^2 or 21 lb) in the tray, or paper jams may occur. Check that paper is below the maximum paper mark (▼).

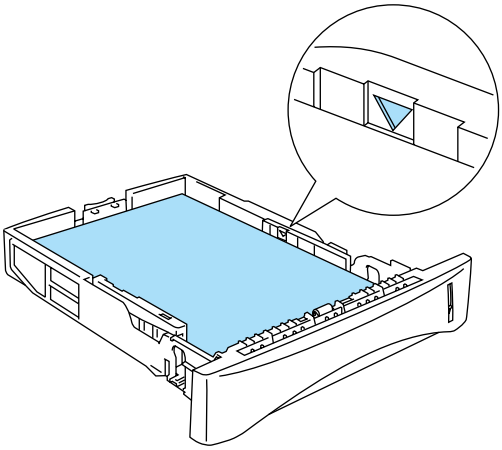

Figure 1-8

When you use pre-printed paper, put the side that is going to be printed on (blank side) face down, with the top of the paper at the front of the tray.

5 Put the paper tray firmly back in the printer. Check that it is inserted fully into the printer.

Pull up the output tray support flap to prevent paper from sliding off the face-down output tray.

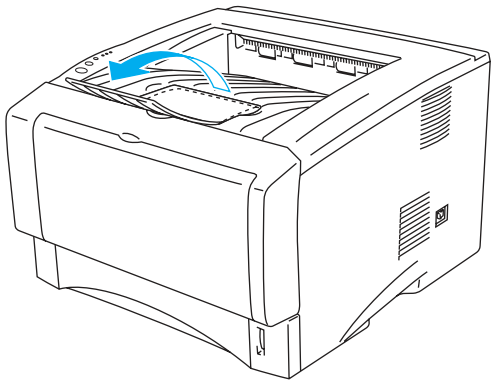

Figure 1-9

If you choose not to pull out the output tray support flap, we recommend that you remove printed pages immediately after they come out of the printer.

6 Send the print data to the printer.

Printing on plain paper from the manual feed tray (For HL-5130 and HL-5140)

The printer automatically turns on the Manual Feed mode when you put paper in the manual feed tray.

1 Select the **Paper Size**, **Media Type**, **Paper Source**, and other settings in the printer driver.

Media Type: Plain Paper

Paper Source: Manual

PCL driver

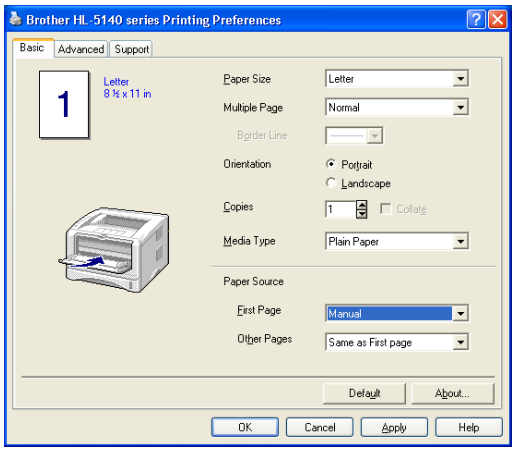

2 Send the print data to the printer.

A **NO PAPER** message is shown in the Status Monitor and indicated by the control panel LEDs until you put a sheet of paper in the manual feed tray.

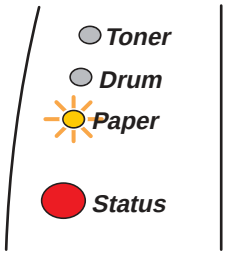

Figure 1-10

3 Open the manual feed tray. Slide the paper guides to fit the paper size.

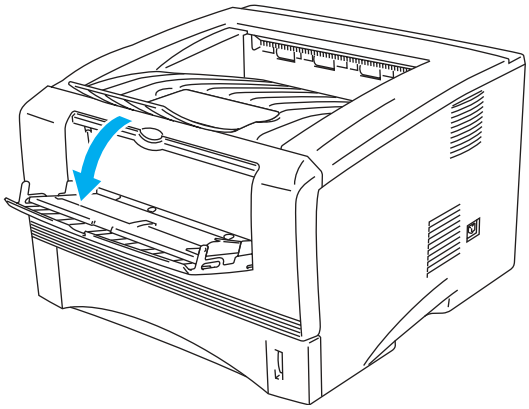

Figure 1-11

4 Using both hands put paper in the manual feed tray until the front edge of the paper touches the paper feed roller. Hold the paper in this position until the printer automatically feeds the paper in for a short distance, and then let go of the paper.

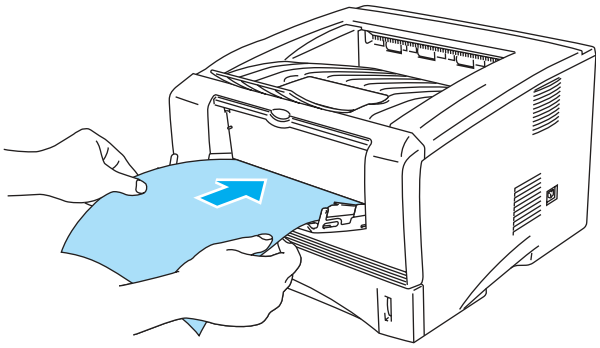

Figure 1-12

- Make sure that the paper is straight and in the proper position on the manual feed tray. If it is not, the paper may not be fed properly, resulting in a skewed printout or a paper jam.
- Do not put more than one piece of paper in the manual feed tray at the same time, or it may cause a jam.
- If you put any Media (paper, transparency and so on) in the manual feed tray before the printer is in the Ready state, the media may be ejected without being printed on.

5 After the printed page comes out of the printer, put in the next sheet of paper as in Step 4 above. Repeat for each page that you want to print.

Printing on plain paper from the multi-purpose tray (MP tray) (For HL-5150D and HL-5170DN)

The printer automatically turns on the MP Tray mode when you put paper in the multi-purpose tray.

1 Select the **Paper Size**, **Media Type**, **Paper Source**, and other settings in the printer driver.

Media Type: Plain Paper

Paper Source: MP Tray

PCL driver

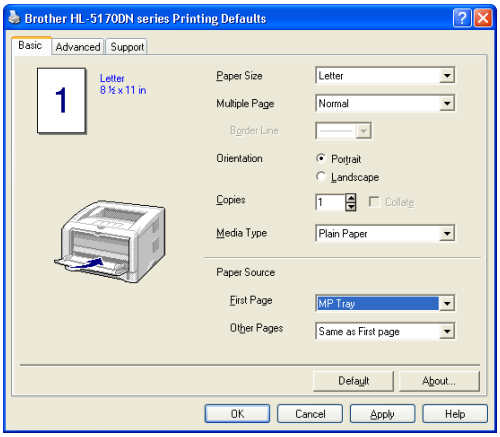

PS driver

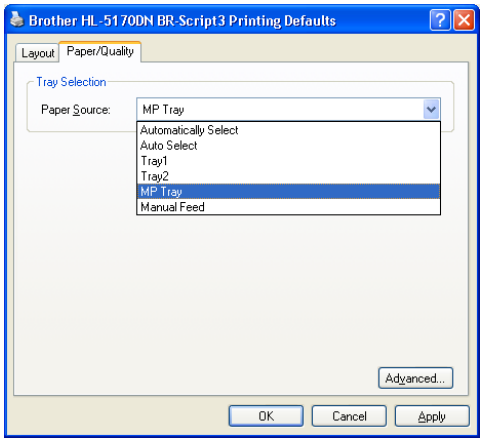

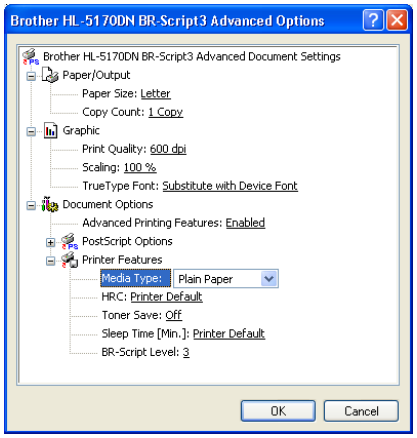

2 Open the MP tray and lower it gently.

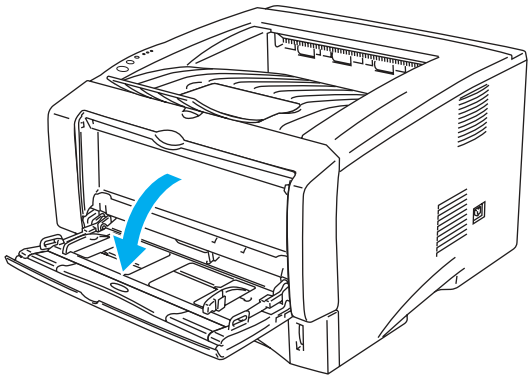

Figure 1-13

3 Pull out the MP tray support flap.

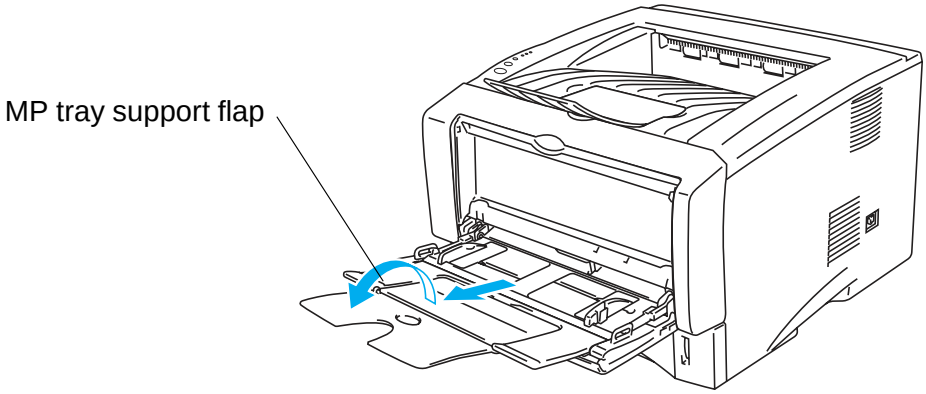

Figure 1-14

4 When putting paper in the MP tray, make sure it touches the back of the tray and remains under the maximum paper height guides on both sides of the tray.

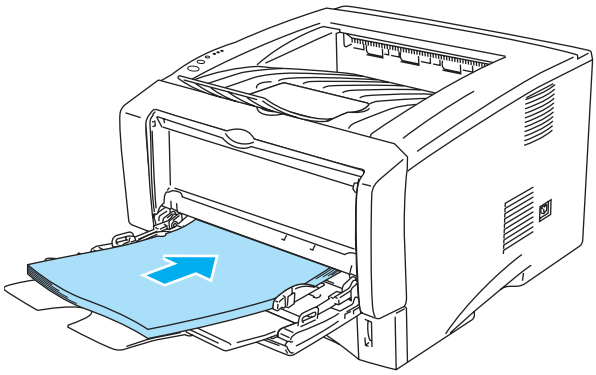

Figure 1-15

Make sure that the paper is straight and in the proper position on the MP tray. If it is not, the paper may not be fed properly, resulting in a skewed printout or a paper jam.

5 While pressing the paper-guide release lever, slide the paper guide to fit the paper size.

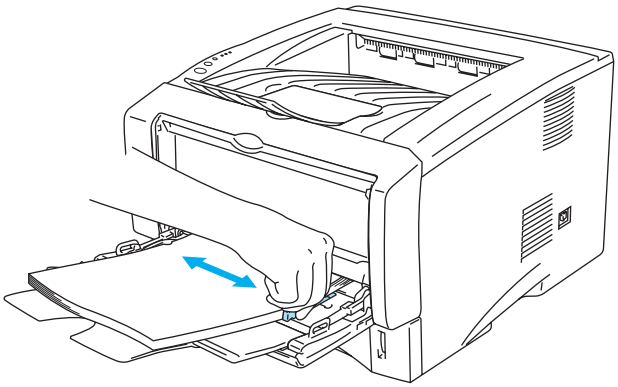

Figure 1-16

When you put paper in the MP tray, please remember the following:

- The side to be printed on must be face up.
- During printing, the inside tray rises to feed paper into the printer.
- Put the leading edge (top of the paper) in first and push it gently into the tray.
- The top of the paper stack must be under the maximum paper height guides that are on both sides of the tray.

6 Send the print data to the printer.

Printing on thicker paper and card stock

When the face-up output tray is pulled down, the printer has a straight paper path from the manual feed tray or the MP tray through to the back of the printer. Use this paper feed and output method when you want to print on thicker paper or card stock.

When you select the paper you want to use, see *What kind of paper can I use?* on page 1-5.

Printing on thicker paper and card stock from the manual feed tray (For HL-5130 and HL-5140)

1 Select the **Paper Size**, **Media Type**, **Paper Source**, and other settings in the printer driver.

Media Type: Thick paper or Thicker paper

Paper Source: Manual

PCL driver

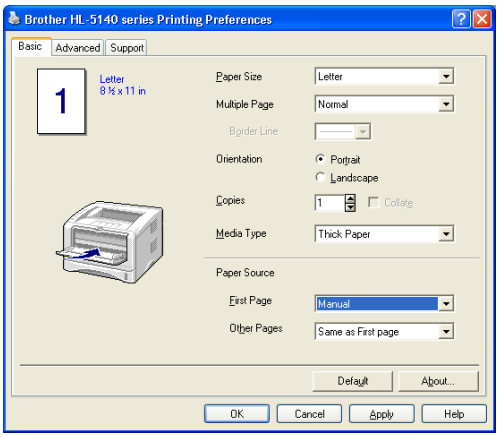

2 Open the face-up output tray.

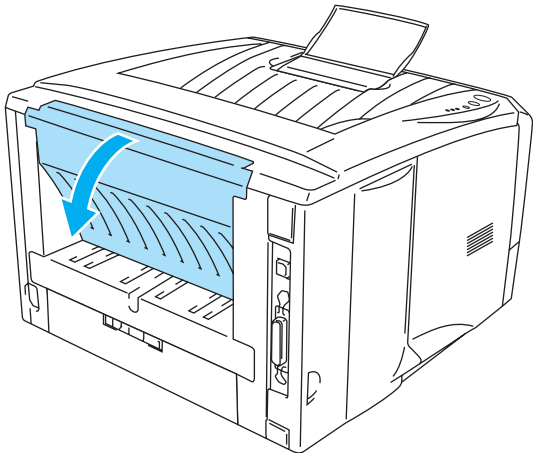

Figure 1-17

3 Send the print data to the printer.

A **NO PAPER** status is shown by the control panel LEDs until you put a sheet of paper in the manual feed tray.

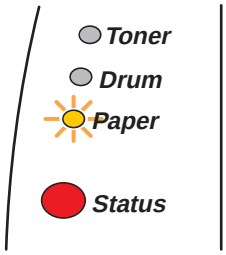

Figure 1-18

4 Open the manual feed tray. Slide the paper guides to fit the paper size.

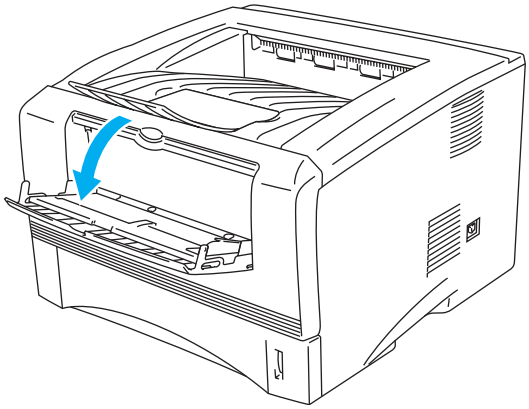

Figure 1-19

5 Using both hands put the paper in the manual feed tray until the front edge of the paper touches the paper feed roller. Hold the paper in this position until the printer automatically feeds the paper in for a short distance, and then let go of the paper.

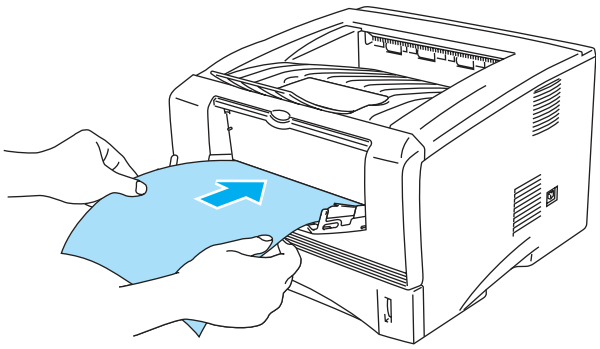

Figure 1-20

- Make sure that the paper is straight and in the proper position in the manual feed tray. If it is not, the paper may not be fed properly, resulting in a skewed printout or a paper jam.
- Do not put more than one piece of paper in the manual feed tray at the same time, or it may cause a jam.
- If you put any Media (paper, transparency and so on) in the manual feed tray before the printer is in the Ready state, the media may be ejected without being printed on.

6 After the printed page comes out of the printer, put in the next sheet of paper as in Step 5 above. Repeat for each page that you want to print.

7 Close the face-up output tray.

Caution

Remove each sheet immediately after printing. Stacking the sheets may cause a paper jam or the paper to curl.

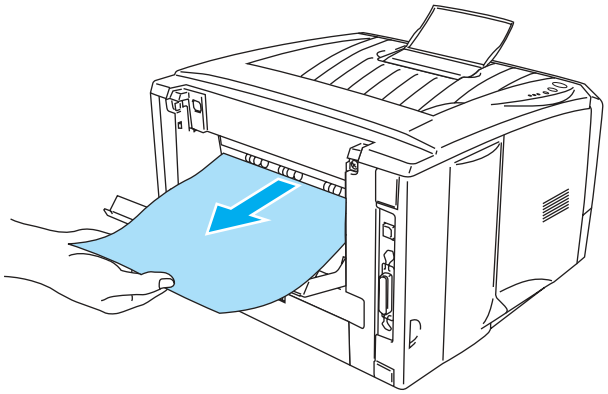

Figure 1-21

Printing on thicker paper and card stock from the multi-purpose tray (MP tray) (For HL-5150D and HL-5170DN)

1 Select the **Paper Size**, **Media Type**, **Paper Source**, and other settings in the printer driver.

Media Type: Thick paper or Thicker paper

Paper Source: MP Tray

PCL driver

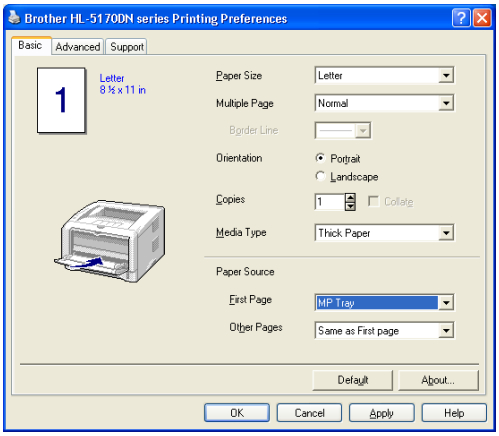

PS driver

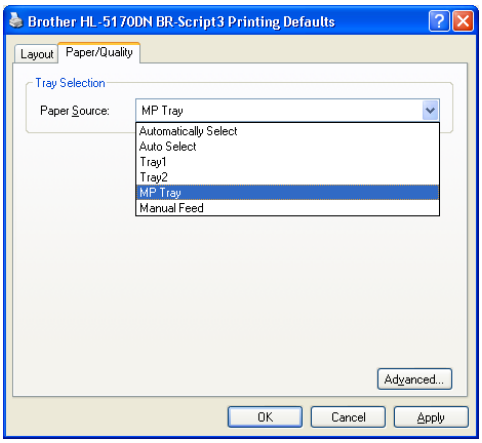

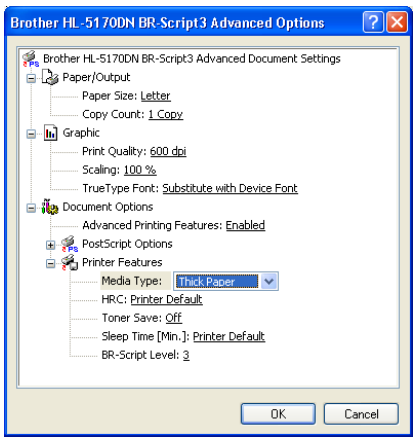

2 Open the face-up output tray, and then pull out the face-up output tray support if necessary.

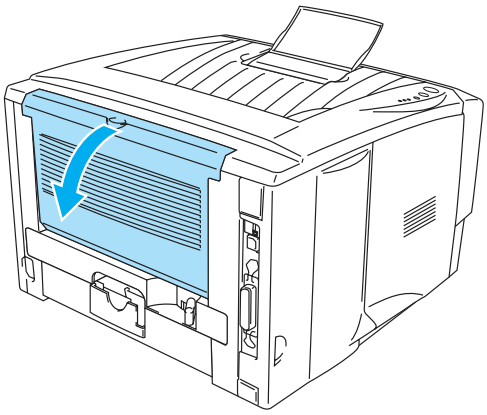

Figure 1-22

3 Open the MP tray and lower it gently.

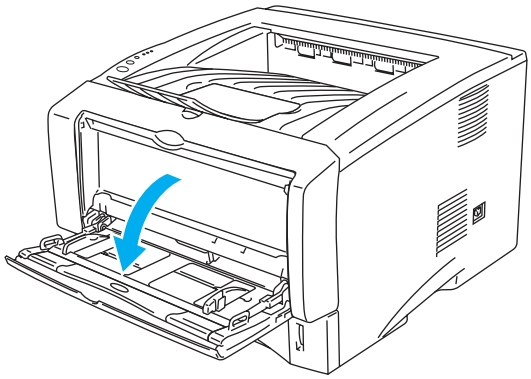

Figure 1-23

4 Pull out the MP tray support flap.

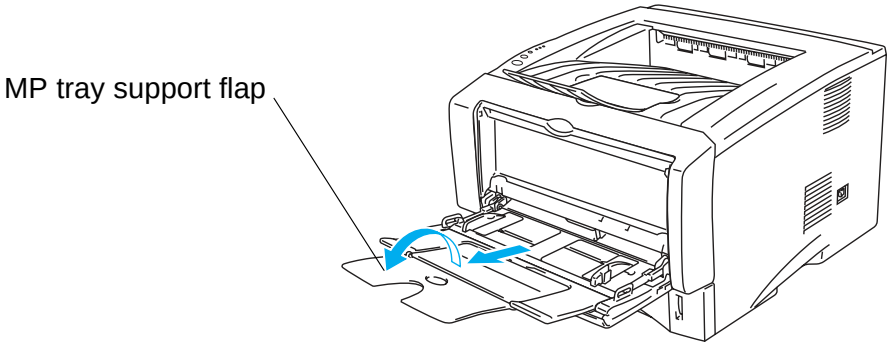

Figure 1-24

5 When putting paper in the MP tray, make sure it touches the back of the tray and remains under the maximum paper height guides on both sides of the tray.

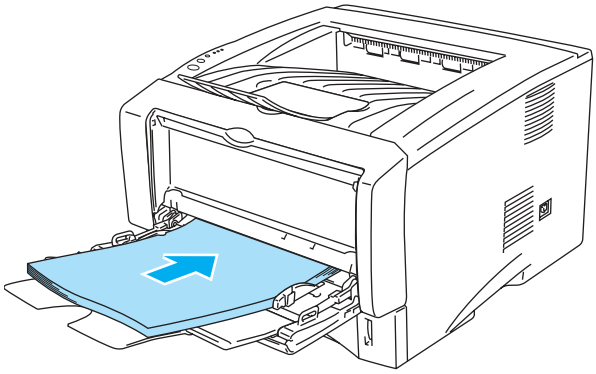

Figure 1-25

Make sure that the paper is straight and in the proper position in the MP tray. If it is not, the paper may not be fed properly, resulting in a skewed printout or a paper jam.

6 While pressing the paper-guide release lever, slide the paper guide to fit the paper size.

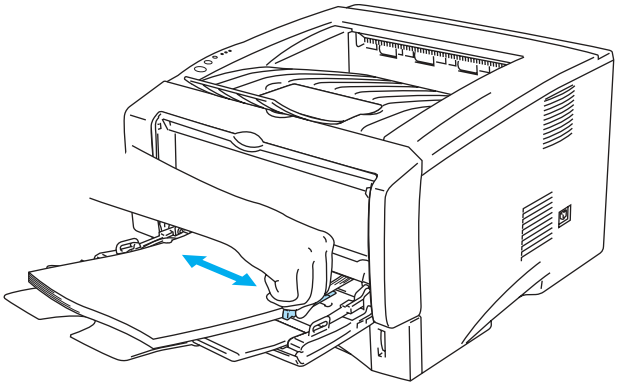

Figure 1-26

When you put paper in the MP tray, please remember the following;

- During printing, the inside tray rises to feed paper into the printer.
- The side to be printed on must be face up.
- Put the leading edge (top of the paper) in first and push it gently into the tray.
- The top of the paper stack must be under the maximum paper height guides that are on both sides of the tray.

7 Send the print data to the printer.

8 Close the face-up output tray.

Caution

Remove each sheet immediately after printing. Stacking the sheets may cause a paper jam or the paper to curl.

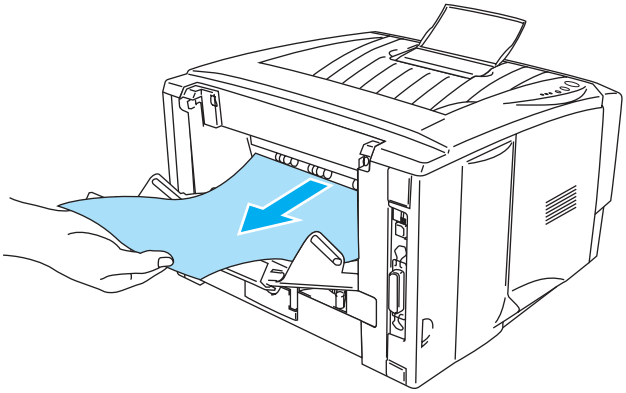

Figure 1-27

Printing on envelopes

Types of envelopes to avoid

Do not use envelopes:

- that are damaged, curled, wrinkled, or an usual shape
- that are extremely shiny or textured
- with clasps, snaps or tie strings
- with self-adhesive closures
- that are of a baggy construction
- that are not sharply creased
- that are embossed (have raised writing on them)
- that were previously printed by a laser printer
- that are pre-printed on the inside
- that cannot be arranged when put in a pile
- that are made of paper that weighs more than the paper weight specifications for the printer
- that have been badly made, with edges that are not straight or consistently square or
- with windows, holes, cutouts or perforations

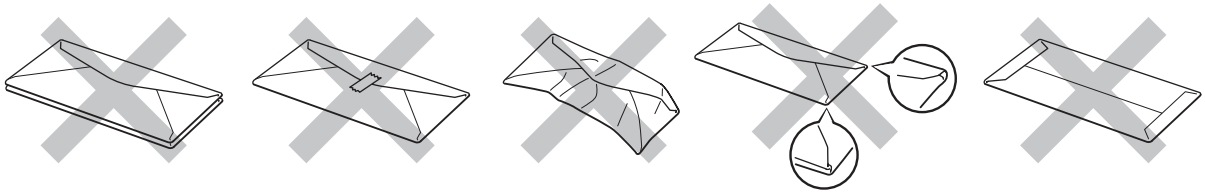

Figure 1-28

IF YOU USE ANY OF THE TYPES OF ENVELOPES LISTED ABOVE, THEY MAY DAMAGE YOUR PRINTER. THIS DAMAGE IS NOT COVERED UNDER ANY BROTHER WARRANTY OR SERVICE AGREEMENT.

- Before you print envelopes, you must ‘fan’ the stack to avoid paper jams and misfeeds.
- Do not put different types of paper in the paper tray at the same time because it may cause paper jams or misfeeds.
- Do not print envelopes using duplex printing.
- For proper printing, you must choose the same paper size from your software application as the paper in the tray.
- See *What kind of paper can I use?* on page 1-5.

Most envelopes will be suitable for your printer. However, some envelopes will have feed and print-quality problems because of the way they have been made. A suitable envelope should have edges with straight, well-creased folds and the leading edge should not be thicker than two pieces of paper. The envelope should lie flat and not be of baggy or flimsy construction. You should buy quality envelopes from a supplier who understands that you will be using the envelopes in a laser printer. Before you print a lot of envelopes, test one to make sure that the print results are what you want.

Brother will not recommend a particular envelope because envelope manufacturers may change the envelope specifications. You are responsible for the quality and performance of the envelopes you use.

Printing on envelopes from the manual feed tray (For HL-5130 and HL-5140)

The printer has a straight paper path from the manual feed tray to the back of the printer. Use this paper feed and output method when you want to print envelopes.

The printer automatically turns on the Manual Feed mode when you put paper in the manual feed tray.

1 Select the **Paper Size**, **Media Type**, **Paper Source**, and other settings in the printer driver.

Media Type: Envelopes

Paper Source: Manual

PCL driver

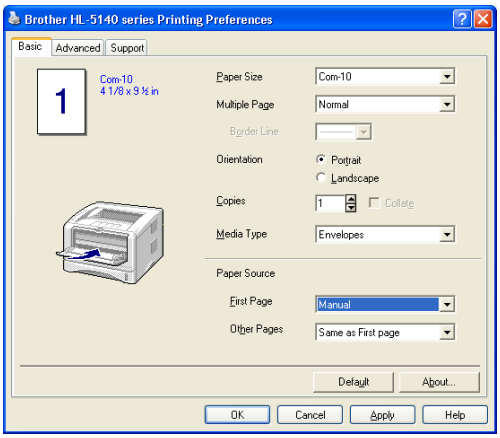

2 Open the face-up output tray.

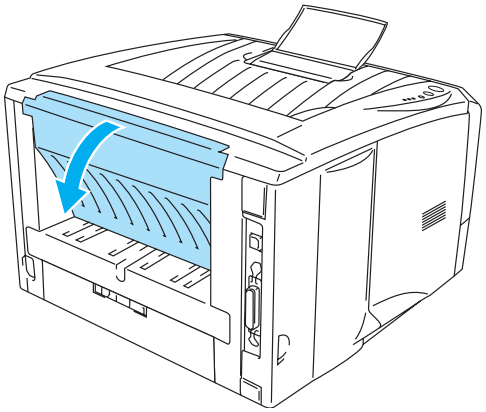

Figure 1-29

3 Send the print data to the printer.

A **NO PAPER** status is shown by the control panel LEDs until you put a sheet of paper in the manual feed tray.

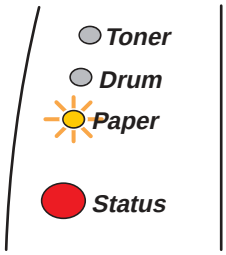

Figure 1-30

4 Open the manual feed tray. Slide the paper guides to fit the envelope size.

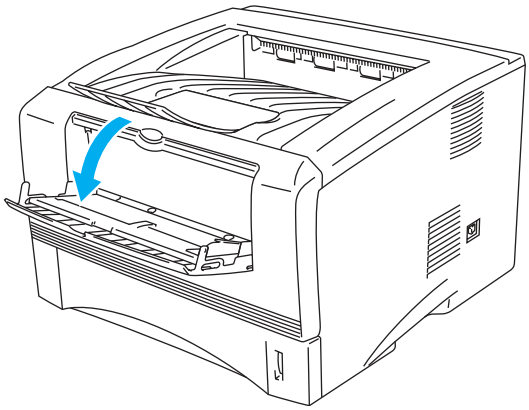

Figure 1-31

Envelopes that have been creased after they have been printed:

At the back of the printer, open the face-up output tray and push down the blue tabs at the left and right hand sides (as shown in the figure below). When you have finished printing your envelopes, close the face-up output tray to reset the two blue tabs back to their original position.

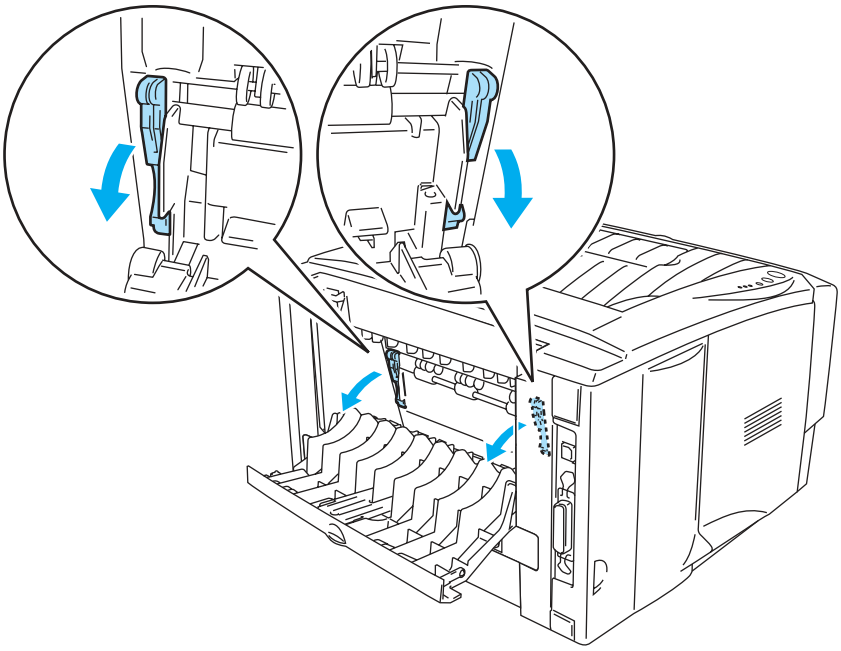

Figure 1-32

5 Using both hands put the envelope in the manual feed tray until the front edge of the envelope touches the paper feed roller. Hold the envelope in this position until the printer automatically feeds it in for a short distance, and then let go of the envelope.

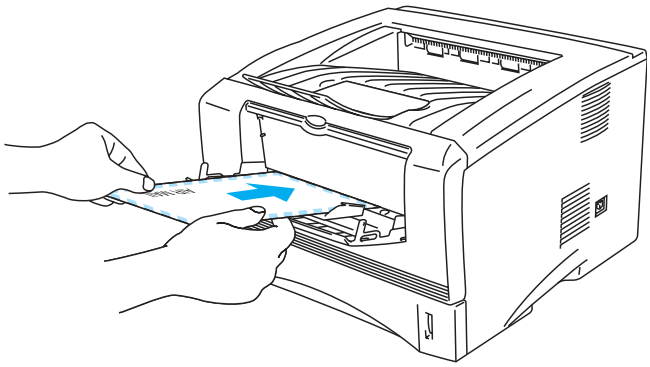

Figure 1-33

- Make sure the envelope is straight as you insert it sideways in the manual feed tray. If it is not, the envelope may not be fed properly, resulting in a skewed printout or a jam.
- Do not put more than one envelope in the manual feed tray at the same time, or it may cause a jam.
- Put the envelope in the manual feed tray with the side to be printed face up.
- If you put any Media (paper, transparency and so on) in the manual feed tray before the printer is in the Ready state, the media may be ejected without being printed on.

6 After the printed envelope comes out of the printer, the printer will wait until you put in the next envelope. Repeat Step 5 for each envelope you want to print.

7 After you finish the print job, close the face-up output tray.

- Envelope joints that are sealed by the manufacturer should be secure.
- All sides should be properly folded without wrinkles or creases.

Printing on envelopes from the MP tray (For HL-5150D and HL-5170DN)

The printer has a straight paper path from the MP tray to the back of the printer. Use this paper feed and output method when you want to print envelopes.

The printer automatically turns on the MP Tray mode when you put paper in the MP tray.

1 Select the **Paper Size**, **Media Type**, **Paper Source**, and other settings in the printer driver.

Media Type: Envelopes

Paper Source: MP Tray

PCL driver

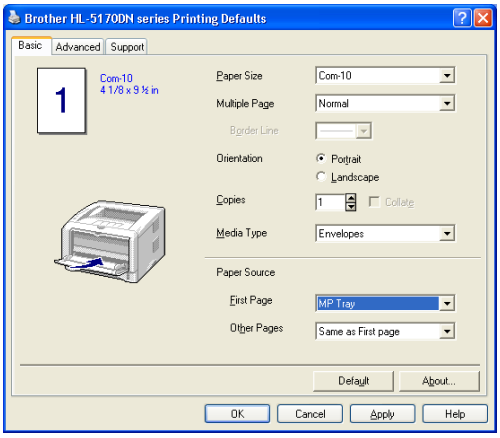

PS driver

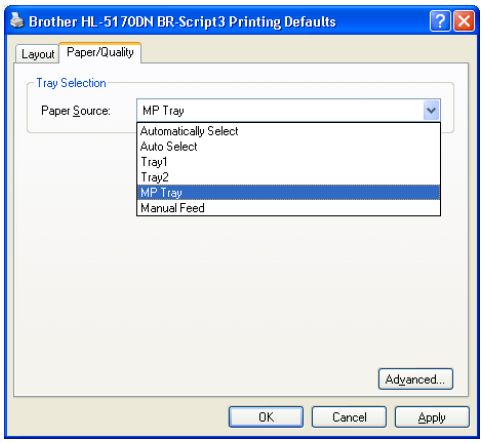

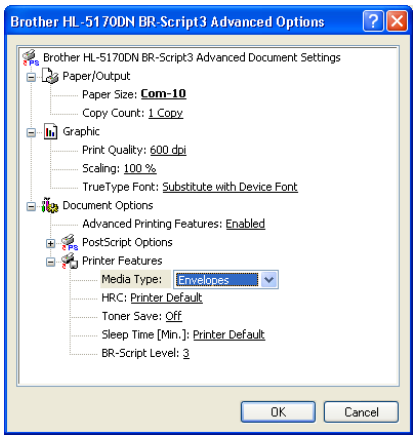

2 Open the face-up output tray, and then pull out the face-up output tray support if necessary.

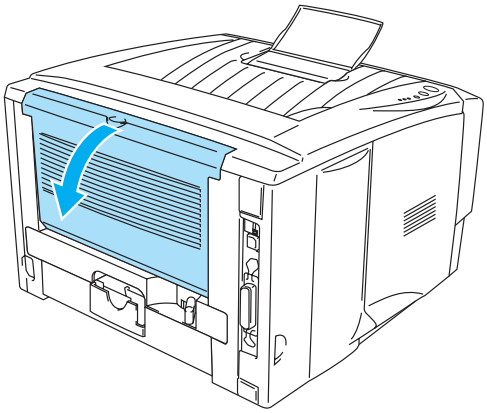

Figure 1-34

3 Open the MP tray and lower it gently.

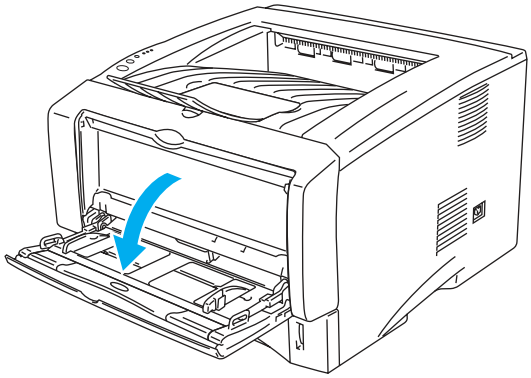

Figure 1-35

4 Pull out the MP tray support flap.

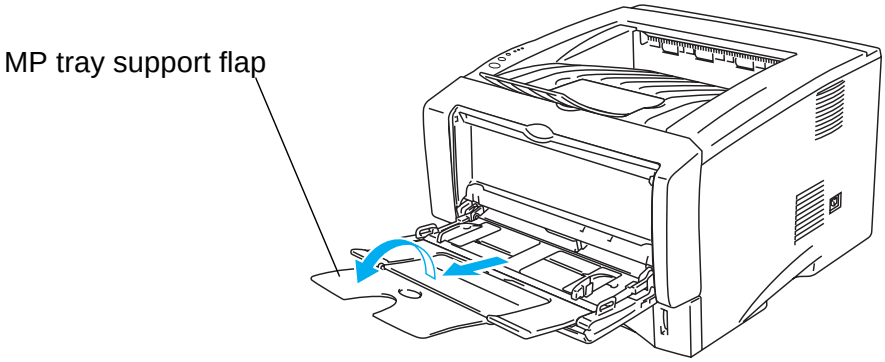

Figure 1-36

Envelopes that have been creased after they have been printed:

At the back of the printer, open the face-up output tray and push down the blue tabs at the left and right hand sides (as shown in the figure below). When you have finished printing your envelopes, close the face-up output tray to reset the two blue tabs back to their original position.

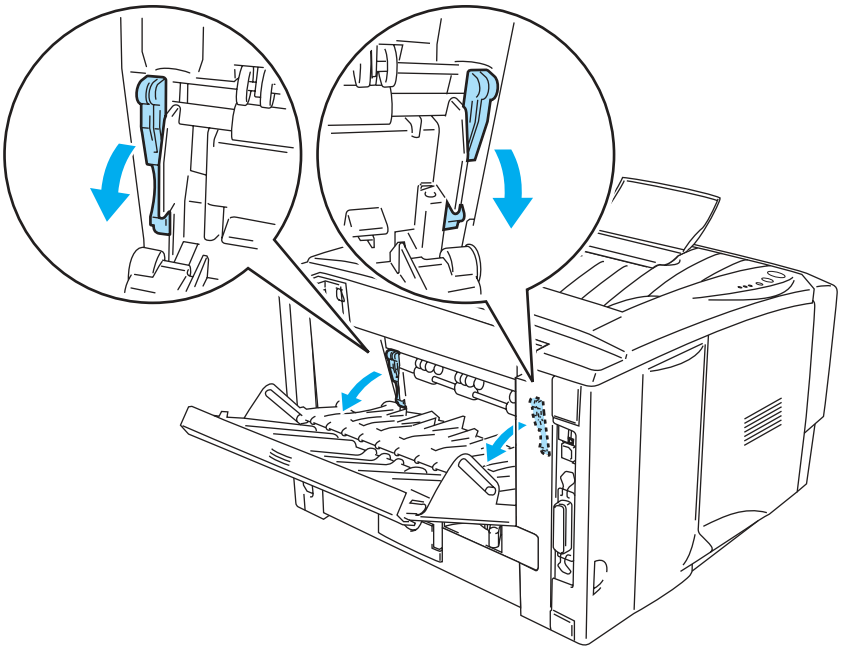

Figure 1-37

5 Put envelopes in the MP tray so that they touch the back of the tray and remain under the maximum paper height guides on both sides of the tray. Do not put more than 3 envelopes in the MP tray at any one time, or it may cause a jam.

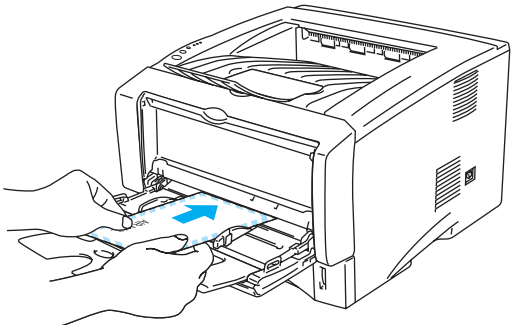

Figure 1-38

Make sure that the envelopes are neatly stacked and in the proper position in the MP tray. If they are not, the envelopes may not be fed properly, resulting in a skewed printout or a jam.

6 Press and slide the paper-width guide to fit the envelope size.

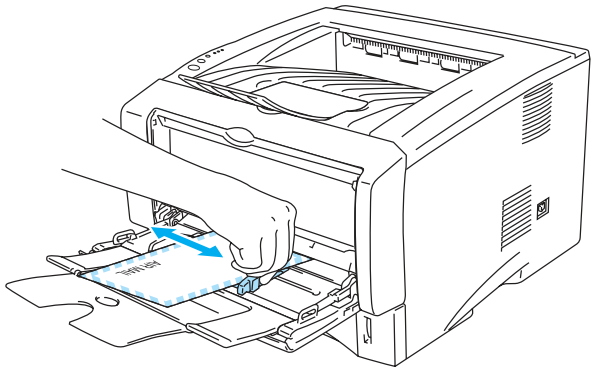

Figure 1-39

DL size double-flap envelopes

- If the DL size double flap envelope is creased after printing, go to the **Basic** tab, select **Paper Size** and then select **DL Long Edge**. Put a new DL size double-flap envelope in the MP tray with the longest edge of the envelope in first, then print again.

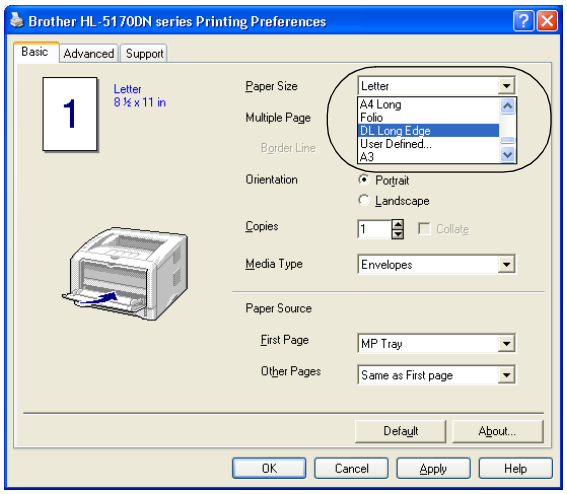

When you put envelopes in the MP tray, please remember the following;

- During printing, the inside tray rises to feed envelopes into the printer.
- The side to be printed on must be face up.
- Put the right side edge of the envelope in first and push it gently into the tray.
- The top of the envelope stack must be under the maximum paper height guides that are on both sides of the tray.

7 Send the print data to the printer.

8 After you finish the print job, close the face-up output tray.

- If envelopes get smudged during printing, in the printer driver select **MP Tray** as the **Paper Source** for a straight paper path. Then, set the **Media Type** to **Thick Paper** or **Thicker Paper** to increase the fixing temperature. To adjust the print density setting, see *Density adjustment* on page 2-8.
- Envelope joints that are sealed by the manufacturer should be secure.
- All sides should be properly folded without any wrinkles or creases.

Printing on transparencies

You can print on transparencies from the paper tray, manual feed tray or MP tray.

Printing on transparencies from the paper tray

- Do not put more than 10 transparencies in the paper tray.
- Illustrations in this section are based on HL-5150D and HL-5170DN.

1 Select the **Paper Size**, **Media Type**, **Paper Source**, and other settings in the printer driver.
Media Type: Transparencies
Paper Source: Tray1

PCL driver

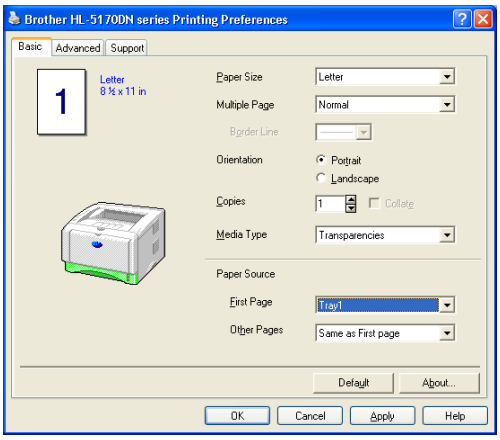

PS driver (For HL-5150D and HL-5170DN)

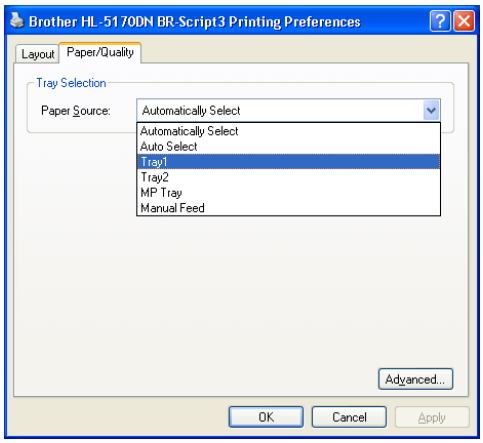

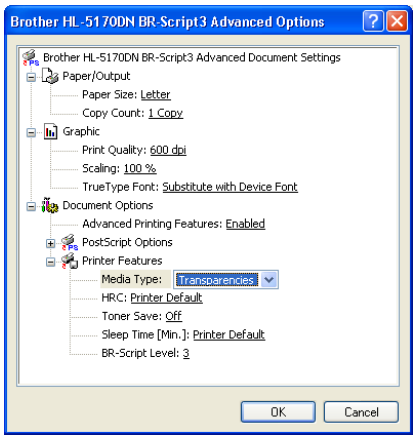

2 Pull the paper tray completely out of the printer.

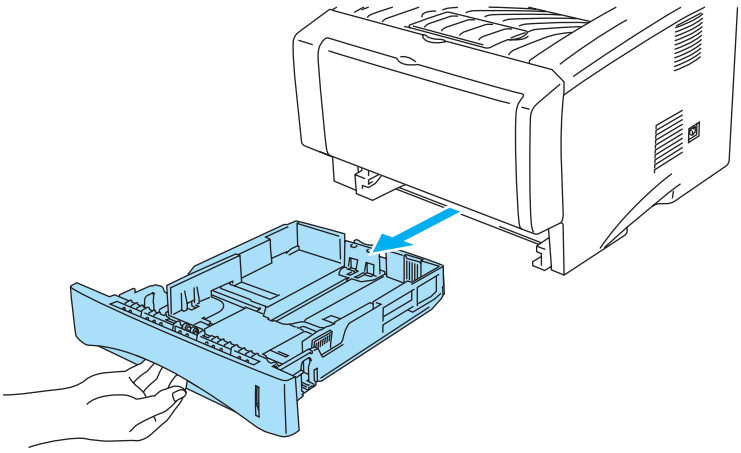

Figure 1-40

3 While pressing the blue paper-guide release levers, slide the paper guides to fit the transparency size. Check that the guides are firmly in the slots.

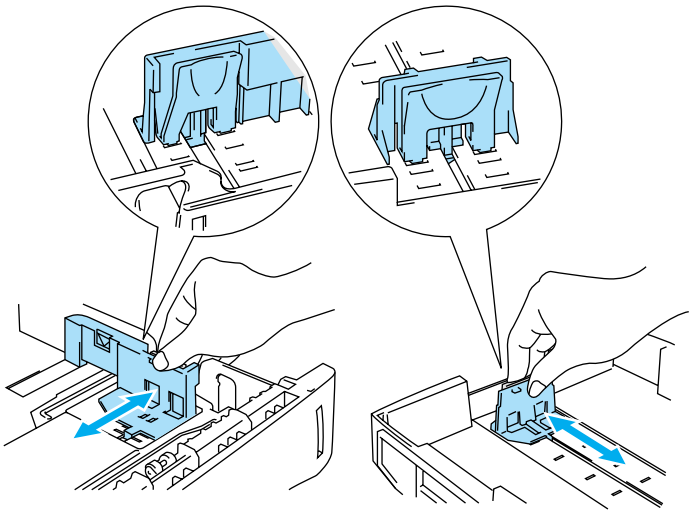

Figure 1-41

4 Put transparencies in the tray. Check that the transparencies are flat and below the maximum paper mark (▼). Do not put more than 10 transparencies in the tray at any one time, or it may cause a jam.

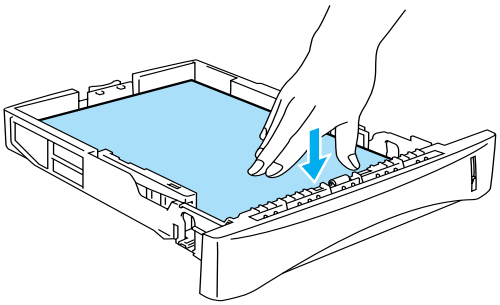

Figure 1-42

5 Put the paper tray firmly back in the printer.

Pull out the support flap to prevent transparencies from sliding off the face-down ouput tray.

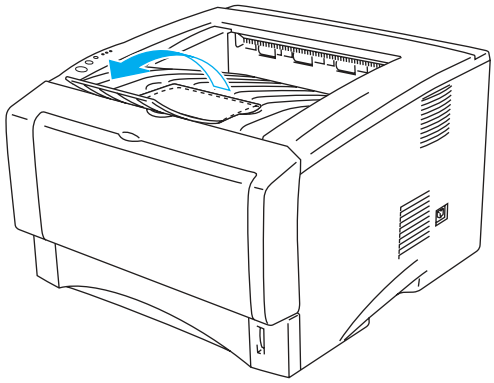

Figure 1-43

6 Send the print data to the printer.

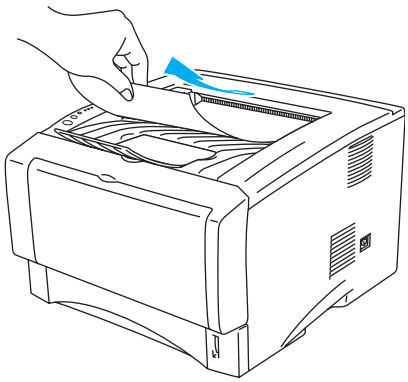

Figure 1-44

Caution

Remove each transparency immediately.

Printing on transparencies from the manual feed tray (For HL-5130 and HL-5140)

When the face-up output tray is open, the printer has a straight paper path from the manual feed tray to the face-up output tray.

1 Select the **Paper Size**, **Media Type**, **Paper Source**, and other settings in the printer driver.

Media Type: Transparencies

Paper Source: Manual

PCL driver

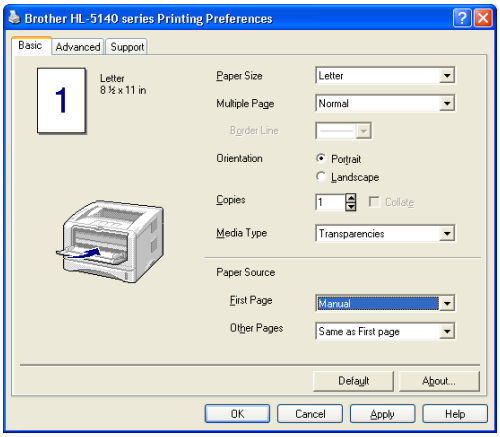

2 Open the face-up output tray.

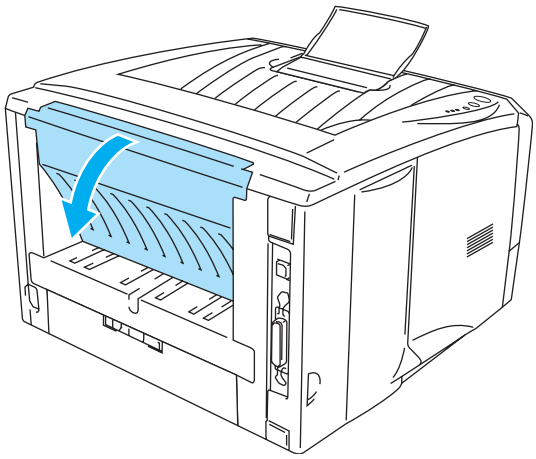

Figure 1-45

3 Send the print data to the printer

A **NO PAPER** status is shown by the control panel LEDs until you put a transparency in the manual feed tray.

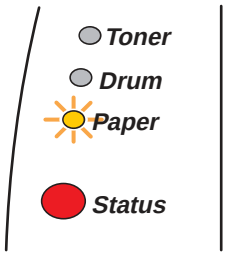

Figure 1-46

4 Open the manual feed tray. Slide the paper guides to the transparency size.

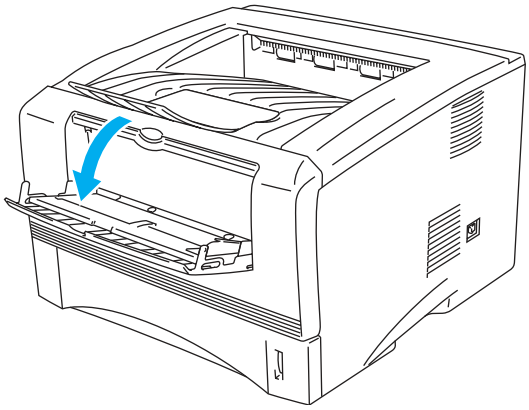

Figure 1-47

5 Using both hands put the transparency in the manual feed tray until its front edge touches the paper feed roller. Hold the transparency in this position until the printer automatically feeds it in for a short distance, and then let go of the transparency.

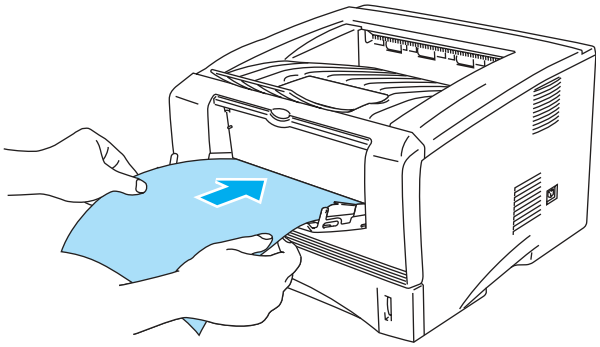

Figure 1-48

- Make sure that the transparency is straight and in the proper position on the manual feed tray. If it is not, the transparency may not be fed properly, resulting in a skewed printout or a jam.
- Do not put more than one transparency in the manual feed tray at the same time, or it may cause a jam.
- If you put any Media (paper, transparency and so on) in the manual feed tray before the printer is in the Ready state, the media may be ejected without being printed on.

6 After the printed transparency comes out of the printer, put in the next transparency as described in Step 5 on page 1-37. Repeat for each transparency that you want to print.

7 After you finish the print job, close the face-up output tray.

Caution

Remove each transparency immediately after printing. Stacking the printed transparencies may cause a paper jam or the transparency to curl.

Printing on transparencies from the MP tray (For HL-5150D and HL-5170DN)

When the face-up output tray is open, the printer has a straight paper path from the MP tray to the back of the printer.

1 Select the **Paper Size**, **Media Type**, **Paper Source**, and other settings in the printer driver.

Media Type: Transparencies

Paper Source: MP Tray

PCL driver

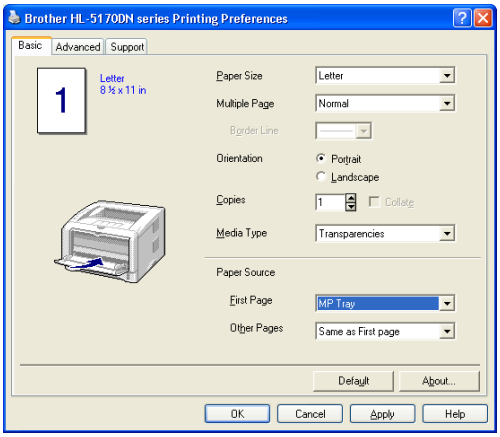

PS driver

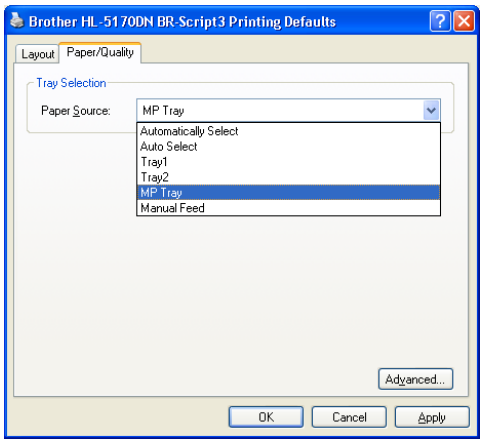

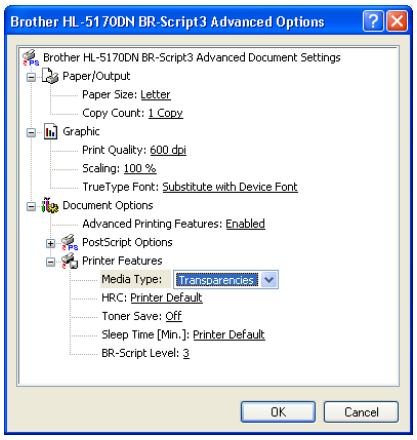

2 Open the face-up output tray.

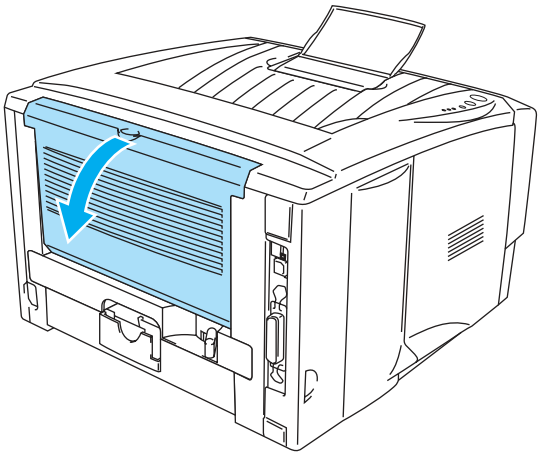

Figure 1-49

3 Send the print data to the printer.

A **NO PAPER** status is shown by the control panel LEDs until you put a transparency in the MP tray.

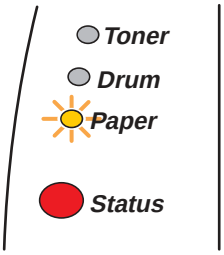

Figure 1-50

4 Open the MP tray and lower it gently.

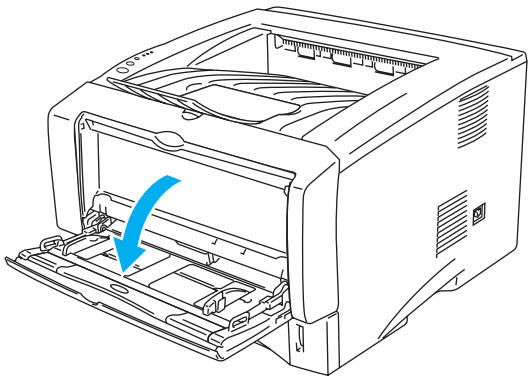

Figure 1-51

5 Pull out the MP tray support flap.

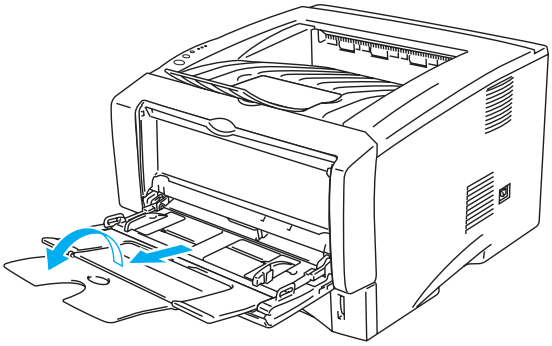

Figure 1-52

6 When putting transparencies in the MP tray, make sure they touch the back of the tray and remain under the maximum paper height guides on both sides of the tray. Do not put more than 10 transparencies in the MP tray at any one time, or it may cause a jam.

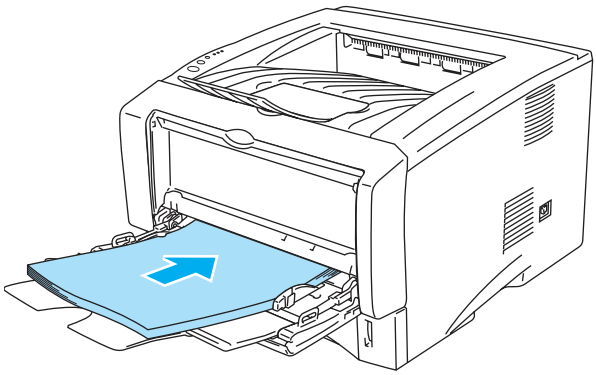

Figure 1-53

Make sure that the transparencies are straight and in the proper position in the MP tray. If they are not, the transparencies may not be fed properly, resulting in a skewed printout or a jam.

7 While pressing the paper-guide release lever, slide the paper guide to fit the transparency size.

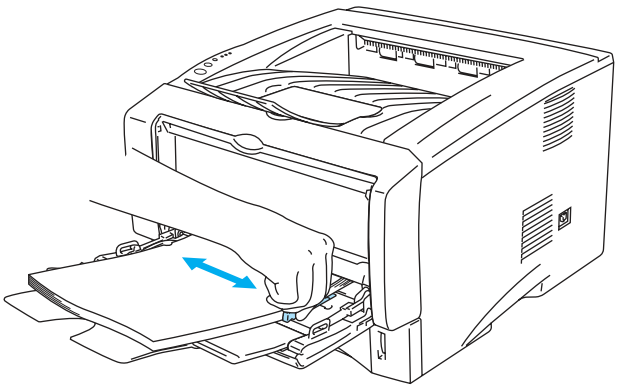

Figure 1-54

When you put transparencies in the MP tray, please remember the following:

- The side to be printed on must be face up.
- Put the leading edge (top of the transparencies) in first and push it gently into the tray.
- The top of the transparency stack must be under the maximum paper height guides that are on both sides of the tray.

8 After you finish printing, close the face-up output tray.

Caution

Remove each transparency immediately after printing. Stacking the printed transparencies may cause a paper jam or the transparency to curl.

Duplex Printing

The supplied PCL printer drivers for Windows® 95/98/Me, Windows NT® 4.0, Windows® 2000/XP, Mac OS® 8.6 to 9.2 and Mac OS® X 10.1 or later all enable duplex printing. For more information about how to choose the settings, see the **Help** text in the printer driver.

Guidelines for printing on both sides of the paper

- If the paper is thin, it may wrinkle.
- If paper is curled, straighten it and then put it back in the paper tray.
- You should use regular paper. Do not use bond paper.
- If the paper is not feeding properly, it may be curled. Remove the paper and straighten it.

Printing on both sides of the paper (manual duplex printing)

The PS driver does not support manual duplex printing.

Manual duplex printing from the paper tray

1. Choose the **Manual Duplex** printing mode you need from the **Advanced** tab, and from the **Basic** tab select the **Paper Source** to be **Tray1**.
2. The printer will automatically print all the even-numbered pages on one side of the paper first.
3. Remove the printed even-numbered pages from the output tray and put them back in the paper tray, placing the paper with the side to be printed on (blank side) face down. Follow the instructions on the computer screen.

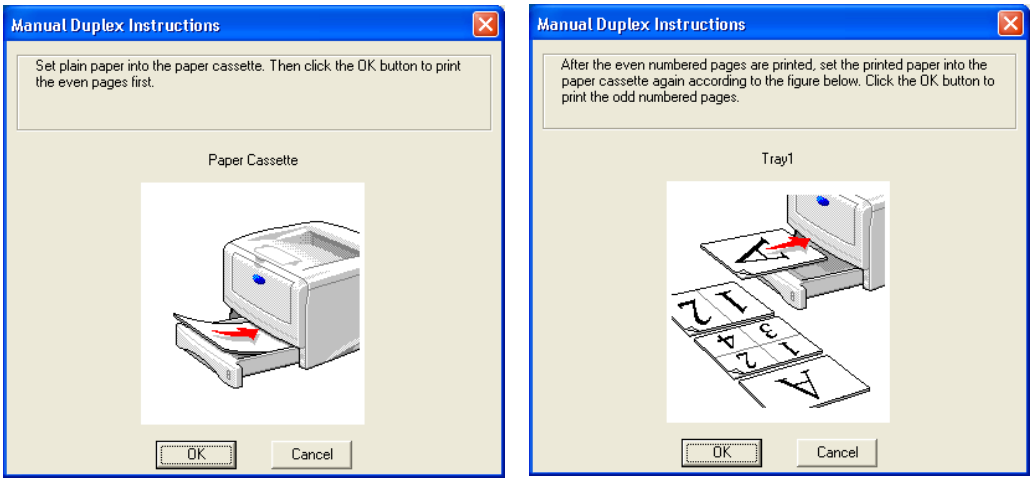

Figure 1-55

If you select the **Paper Source** to be **Auto Select** in Step 1 using HL-5150D or HL-5170DN, please put the printed even-numbered pages in the MP tray.

4. The printer will now automatically print all the odd-numbered pages on the other side of the paper.

When you put paper in the paper tray, first empty the tray then put the printed page in it, with the printed side face up. (Do not add the printed pages to the top of the stack of unprinted paper.)

Manual duplex printing from the manual feed tray (For HL-5130 and HL-5140)

Caution

- Before you put the sheets back in the manual feed tray, you will have to straighten them, or you may get paper jams.
- You should not use very thin or very thick paper.
- When you use the manual duplex function, it is possible that there may be paper jams or poor print quality. If there is a paper jam, see *Paper jams and how to clear them* on page 6-6.

1. Choose the **Manual Duplex** printing mode from the **Advanced** tab, and from the **Basic** tab select the **Paper Source** to be **Manual** feed.
2. Using both hands put the paper in the manual feed tray with the side to be printed on first facing up. Follow the instructions on the computer screen. Repeat this step until you have printed all the even-numbered pages.

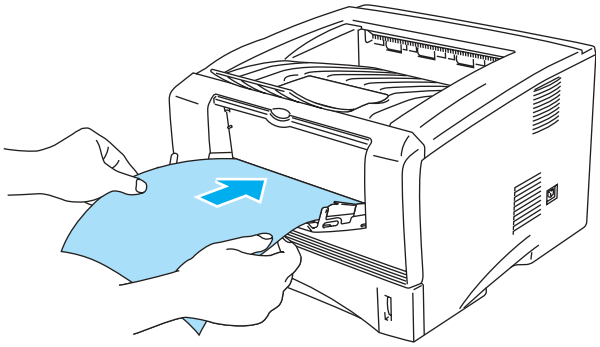

Figure 1-56

3. Remove the printed even-numbered pages from the output tray and put them in the same order back into the manual feed tray. Place the paper with the side that is going to be printed on (the blank side) face up. Follow the instructions on the computer screen.

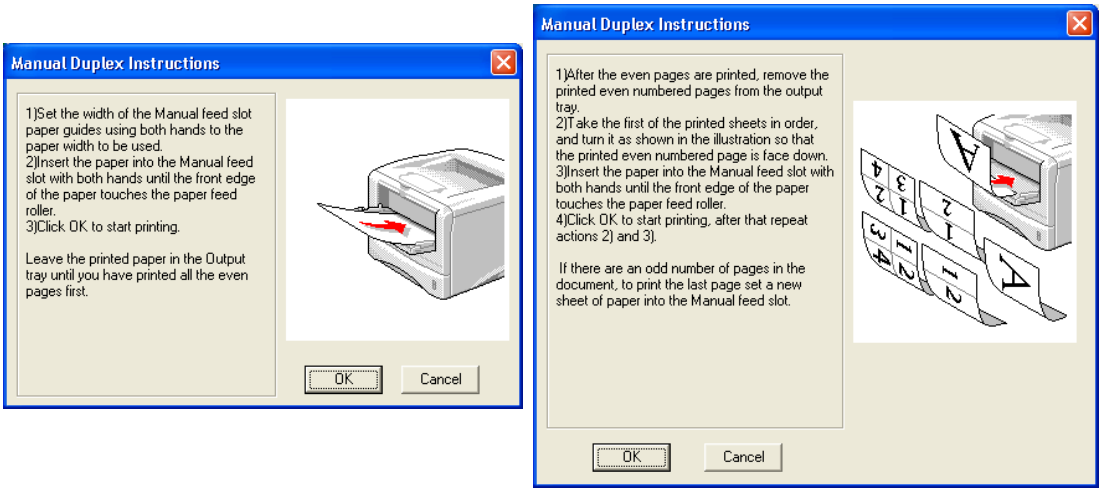

Figure 1-57

If you select the **Paper Source** to be **Auto Select** in Step 1, please put the printed even-numbered pages in the paper tray.

4. Repeat Step 3 until you have printed all the odd-numbered pages on the other side of the paper.

Manual duplex printing from the multi-purpose tray (For HL-5150D and HL-5170DN)

Caution

- Before putting the sheets back in the MP tray, you will have to straighten them, or you may get paper jams.
- You should not use very thin or very thick paper.
- When you use the manual duplex function, it is possible that there may be paper jams or poor print quality. If there is a paper jam, see *Paper jams and how to clear them* on page 6-6.

1. Choose the **Manual Duplex** printing mode from the **Advanced** tab, and from the **Basic** tab select the **Paper Source** to be **MP Tray** feed.
2. Using both hands put the paper in the MP tray with the side to be printed on first facing up. Follow the instructions on the computer screen. Repeat this step until you have printed all the even-numbered pages.

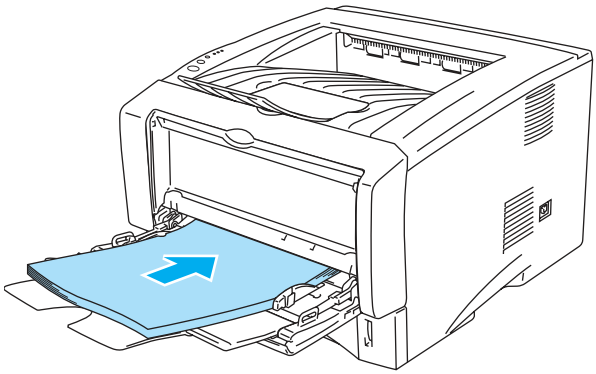

Figure 1-58

3. Remove the printed even-numbered pages from the output tray and put them in the same order back into the MP tray. Place the paper with the side that is going to be printed on (the blank side) face up. Follow the instructions on the computer screen.

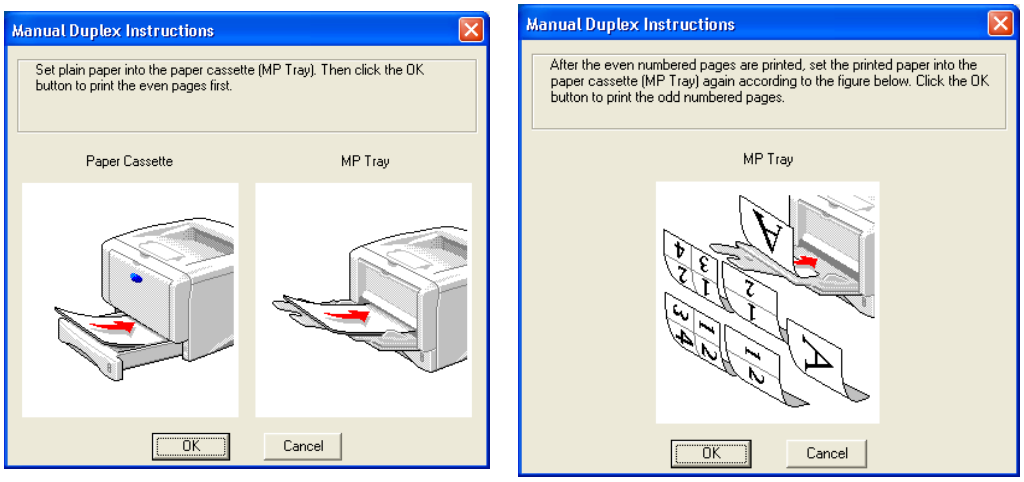

Figure 1-59

4. Repeat Step 3 until you have printed all the odd-numbered pages on the other side of the paper.

Paper orientation for manual duplex printing

The printer prints the second page first.
If you print 10 pages on 5 sheets of paper, it will print page 2 then page 1 on the first sheet of paper.
It will print page 4 then page 3 on the second sheet of paper.
It will print page 6 then page 5 on the third sheet of paper, and so on.

When doing manual duplex printing, the paper must be put in the paper tray in the following way:

- For the manual feed tray or the multi-purpose (MP) tray:

  Put the side to be printed on first, face-up, with the leading edge (top) of the paper in first.
  To print the second side, put the paper face down, with the leading edge (top) of the paper in first.

  If letterhead paper is used, this would be put in with the heading face down, and in first.

  To print the second side, put the heading face up and in first.
- For the upper paper tray and the optional lower tray (tray1 or tray2):

  Put the side to be printed on first, face down, with the leading edge (top) of the paper at the front of the tray.
  To print the second side, put the paper face up, with the leading edge (top) of the paper at the front of the tray.

  If letterhead paper is used, this would be put in the paper tray with the heading face up, and at the front of the tray.

  To print the second page, put the heading face down and at the front of the tray.

For Thicker paper that has curled once the first side has been printed on, and you cannot feed the paper for the second time from manual feed tray or MP tray to allow the other side of the paper to be printed on:

At the back of the printer, open the face-up output tray and push down the blue tabs on the left and right hand sides (as shown in the figure below). When you have finished printing, close the face-up output tray to reset the two blue tabs back to their original position.

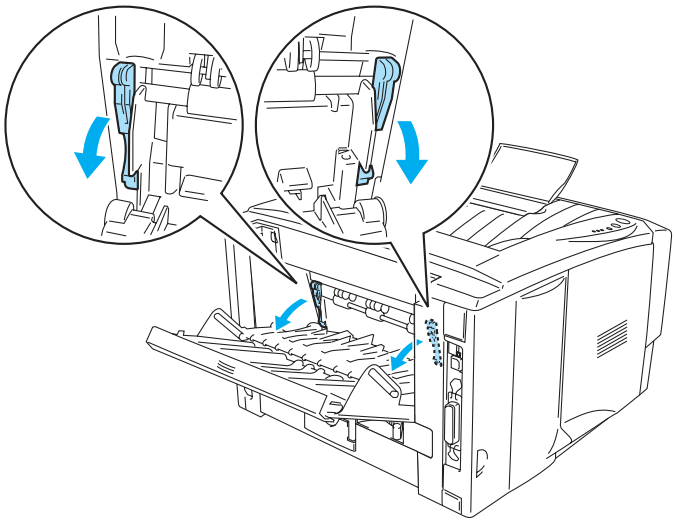

Figure 1-60

Printing on both sides of the paper (automatic duplex printing)

This section is for HL-5150D and HL-5170DN.

Guidelines for automatic duplex printing

- Use A4, Letter or Legal size plain paper.
- If paper is curled, straighten it and then put it back in the paper tray.
- You should use regular paper. Do not use bond paper or thin paper if possible.
- When you use the duplex printing function, the printing quality becomes worse or paper jam may occur under some circumstances. If the paper jam occurs, see *Paper jams and how to clear them* on page 6-6.

1. Load paper into the paper tray or MP tray.
2. Make sure the lever on the Duplex tray is set for the proper paper size.

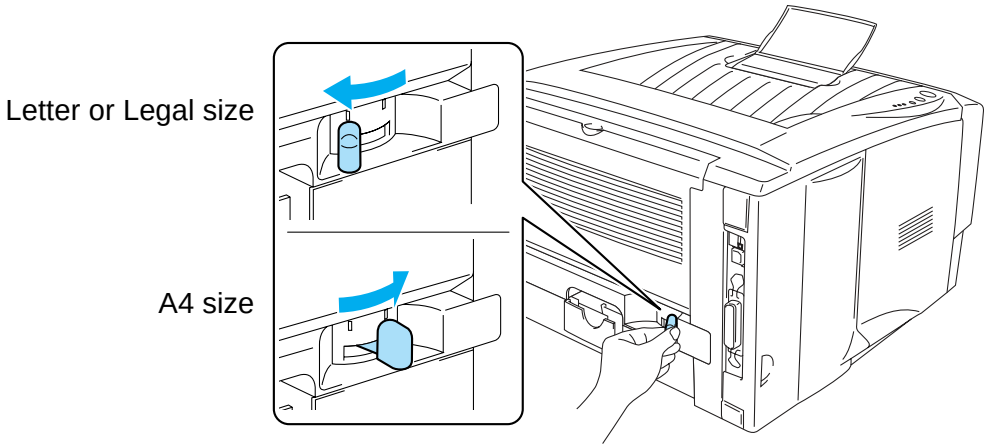

Figure 1-61

3 Open the Properties dialog box in the printer driver. In the **Advanced** tab select Duplex Printing mode, check **Duplex**, and make sure that **Use Duplex tray** has been selected. Select **Duplex Type** and set **Binding Offset** if you need, and then click the **OK** button. The printer will print on both sides of the paper automatically.

PCL driver

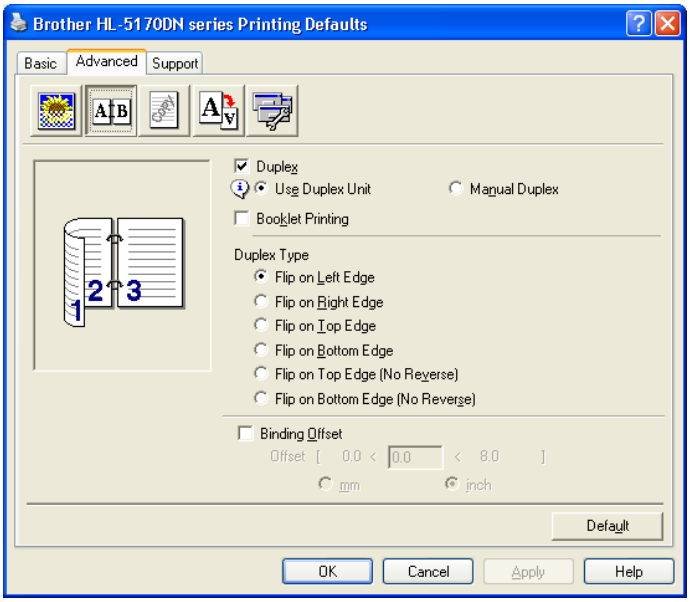

PS driver

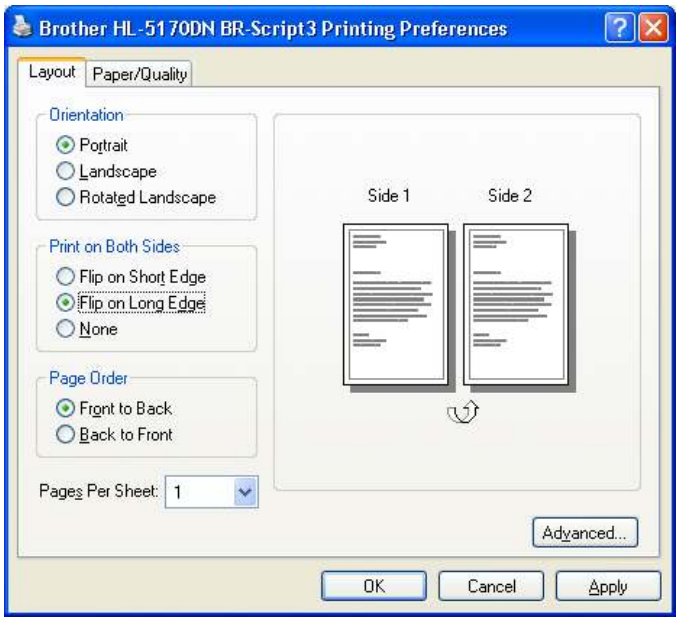

2 Driver and software

Printer driver

A printer driver is software that translates data from the format used by a computer to the format that a particular printer needs. Typically, this format is a printer command language or page description language.

The printer drivers for the following operating systems are on the CD-ROM that we have supplied. You can also download the latest printer driver from the Brother Solutions Center at http://solutions.brother.com

You can see the operations and detailed information in the **Install Software** section of the supplied CD-ROM.

For Windows® 95/98/Me, Windows NT® 4.0 and Windows® 2000/XP

- PCL (Hewlett-Packard LaserJet laser printer) compatible driver
- BR-Script (PostScript®3 language emulation) driver (HL-5150D and HL-5170DN)

For Macintosh®

- Brother Laser driver for Macintosh®
- BR-Script (PostScript®3 language emulation) driver. (HL-5150D and HL-5170DN)

	PCL Driver	PS Driver
Windows® 95 **Windows NT® 4.0**	ⓘ	ⓘ (For HL-5150D and HL-5170DN)
Windows® 98/Me **Windows® 2000** **Windows® XP**	ⓘ	ⓘ (For HL-5150D and HL-5170DN)
Mac OS® 8.6 to 9.2 **Mac OS® X 10.1 to 10.2**	ⓘ	ⓘ (For HL-5150D and HL-5170DN)

You can change the following printer settings when you print from your computer.

- Paper Size
- Multiple Page
- Orientation
- Copies
- Media Type
- Paper Source
- Resolution
- Toner Save Mode
- Duplex Printing (Manual Duplex printing[*1*2] / Duplex Printing with Duplex tray[*5])
- Water mark[*1*2]
- Job Spooling[*1*2]
- Quick Print Setup[*1*2]
- Sleep Time[*2]
- Status Monitor[*1*2]
- Macro[*1*2*3]
- Administrator[*1*2*3]
- Insert Command/File[*1*2*3*4]
- Page Protection[*1*2]
- Print Date & Time[*1*2]
- Density adjustment[*1*2]
- HRC[*2]
- True Type Mode[*2*4]
- Auto Detect[*1*2]

[*1] These settings are not available with the BR-script driver.(HL-5150D and HL-5170DN)

[*2] These settings are not available with Brother Laser for Macintosh®.

[*3] These settings are not available with Windows NT® 4.0 and Windows® 2000/XP.

[*4] These settings are not available for HL-5130.

[*5] This setting is not available for HL-5130 and HL-5140.

For Windows®

Features in the PCL printer driver

You can download the latest printer driver or get other information by accessing the Brother Solutions Center at http://solutions.brother.com

You can also change settings by clicking the illustration on the left side of the **Basic** tab in the **Properties** dialog box.

For more information, please see the **Help** text in the printer driver.

The screens in this section are from Windows® XP. The screens on your PC will vary depending on your Operating System.

Basic tab

If you are using Windows NT® 4.0, Windows® 2000 or XP, you can access the **Basic** tab by clicking **Printing Preferences...** in the **General** tab of the **Printer Properties** screen.

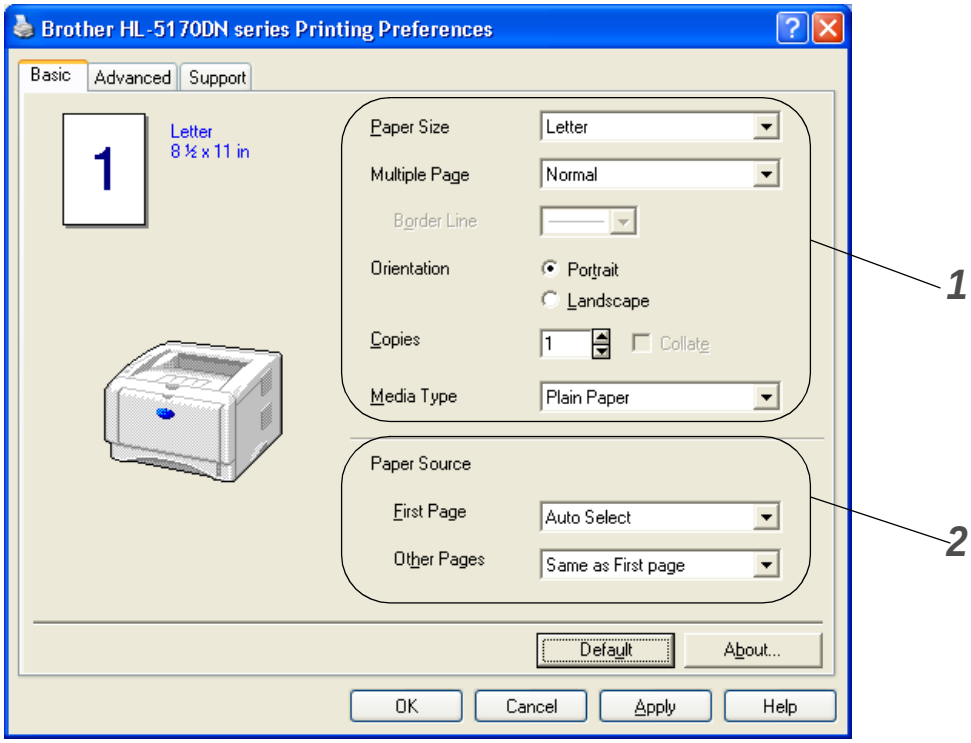

1 Select the **Paper Size**, **Multiple Page**, **Orientation** and so on.

2 Select the **Paper Source** and so on.

Advanced tab

If you are using Windows NT® 4.0, Windows® 2000 or XP, you can access the **Advanced** tab by clicking **Printing Preferences...** in the **General** tab of the **Printer Properties** screen.

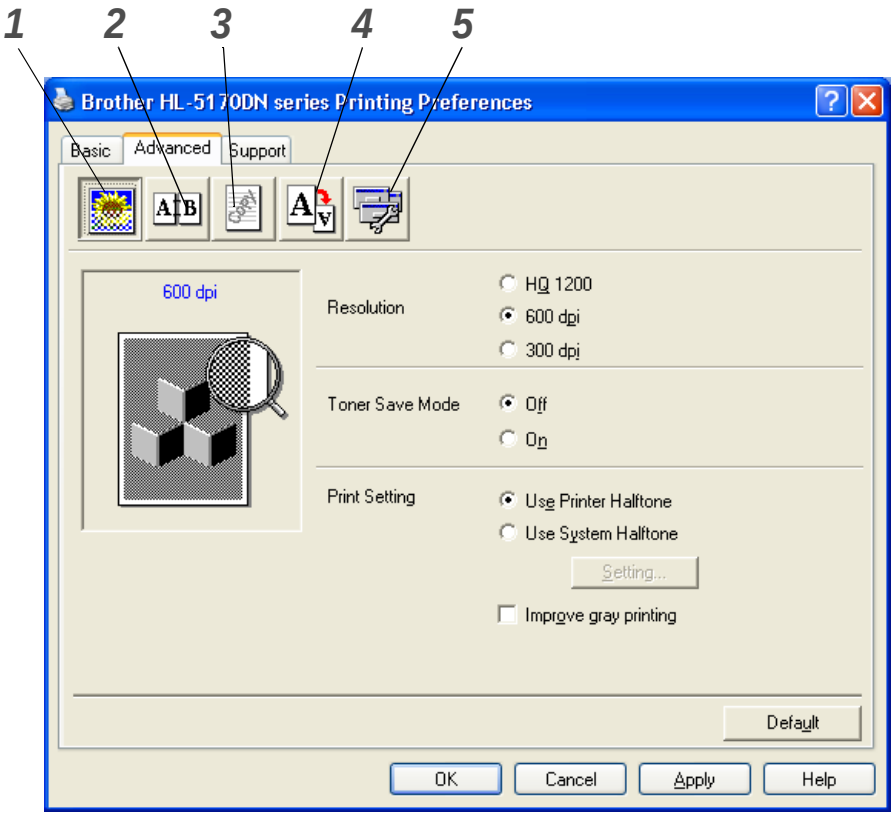

Change the tab settings by clicking the following icons:

1. Print Quality
2. Duplex Printing
3. Watermark
4. Page Setting
5. Device Options

Print Quality

Select the resolution, toner save and print settings or gray printing setting.

Resolution

You can change the resolution as follows:

- HQ 1200
- 600 dpi
- 300 dpi

Toner Save Mode

You can save running costs by turning on the toner save mode, which reduces the print density.

Print Setting

You can manually change the brightness, contrast and other settings.

- **Auto (For Windows® 95/98/Me users only)**

  You can automatically print with the most suitable print setting by selecting the **Auto** button.
- **Manual (For Windows® 95/98/Me users only)**

  You can change the settings manually by selecting the **manual** button and ticking the setting button.
- **Use Printer Halftone (For Windows NT® 4.0, Windows® 2000/XP users only)**

  You can print, using the printer setting by selecting the **Use printer Halftone** button.
- **Use System Halftone (For Windows NT® 4.0, Windows® 2000/XP users only)**

  You can manually change the brightness, contrast and other settings by selecting the **Use system Halftone** button and ticking the setting button.
- **Improve gray printing (For Windows NT® 4.0, Windows® 2000/XP users only)**

  You can improve the image quality of shaded areas by ticking the **Improve gray printing** check box. If you print with this setting, the print speed may be slower depending on the print data.

Duplex Printing

- **Manual Duplex**

  If you select the **Manual Duplex** button, the dialog box for the manual duplex settings appears. Six types of manual duplex binding directions are available for each orientation.
- **Duplex Tray (For HL-5150D and HL-5170DN)**

  If you select the **Duplex Tray** button, the dialog box for the duplex settings appears. Six types of duplex binding directions are available for each orientation, automatically.
- **Binding Offset**

  If you check the Binding Offset option, you can also specify the offset value of the binding side in inches or millimeters.
- **Booklet Printing (For HL-5150D and HL-5170DN)**

  When you want to print a booklet, use this function. To make the Booklet, fold the printed pages down the middle. When using the booklet printing function, please note that the paper size, orientation, source and other settings must remain unchanged for the whole document.

Watermark

You can place a watermarked logo or text into your documents.
When you use a bitmap file as a watermark, you can change the size of the watermark and place it anywhere you like on the page.
When you use text as a watermark, you can change the font, darkness and angle settings.

Page Setting

You can change the print image scaling and select **Mirror** / **Reverse print** options.

Device Options

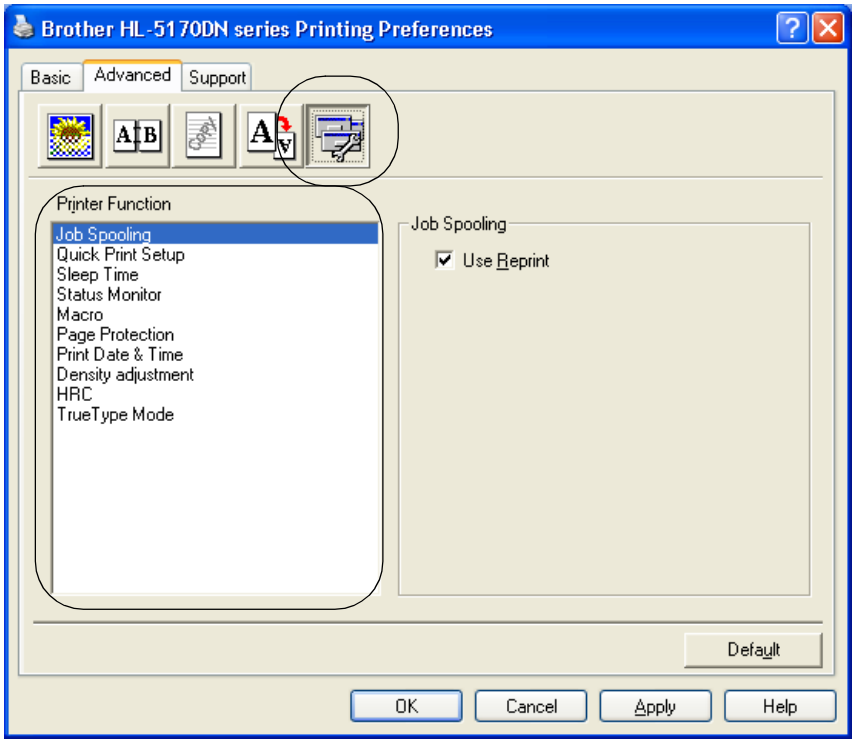

You can set the following **Printer Function** modes in this tab:
(You can jump to the page for each **Printer Function** by clicking the function name in the list below.)

- Job Spooling
- Quick Print Setup
- Sleep Time
- Status Monitor
- Macro (For HL-5140, HL-5150D and HL-5170DN)
- Administrator (For Windows® 95/98/Me users only)
- Insert Command/File (For HL-5140, 5150D and 5170DN: For Windows® 95/98/Me users only)
- Page Protection
- Print Date & Time
- Density adjustment
- HRC (High Resolution Control)*
- TrueType Mode (For HL-5140, HL-5150D and HL-5170DN)*

The **Printer Function** list may differ depending on the model.
* If you are using Windows® 95, 98 or Me, you can change settings of **HRC** and **TrueType Mode** in **Print Setting** in the **Print Quality** option of the **Advanced** tab.

Job Spooling

The printer saves data that you want to reprint.
You can reprint a document without sending the data again from your PC. To reprint press and hold down the **Go** button until all four LEDs are lit and then release the **Go** button.

If you want to prevent other people from printing your data using the Reprint function, clear the **Use Reprint** check box in the job spooling settings.

Quick Print Setup

You can turn the Quick Print Setup function ON or OFF. A small selection window appears on your computer. This will then let you make changes to the settings of the following functions:

- Multiple Page
- Duplex Printing
- Toner Save Mode
- Paper Source
- Media Type

Sleep Time

When the printer does not receive data for a certain period of time (timeout), it enters sleep mode. Sleep mode acts as though the printer was turned off. The default timeout is 5 minutes. When **Intelligent Sleep Mode** is selected, it is automatically adjusted to the most suitable time-out setting depending on the frequency of your printer use. While the printer is in sleep mode, all the LEDs are off, but the printer can still receive data from the computer. Receiving a print file or document automatically wakes up the printer to start printing. Pressing one of the buttons will also wake up the printer.

Sleep mode can be turned off. To turn sleep mode off, go to the **Advanced** tab, select **Device Options** and then select **Sleep Time**. Double click the word **Sleep Time** in the **Sleep Time** screen, this will allow the **Sleep Time Off** function to appear, click **Sleep Time Off** to stop the printer going into sleep mode. The **Sleep Time Off** function can be hidden by double clicking the word **Sleep Time** in the **Sleep Time** screen again. We recommend that you keep Sleep mode on for power saving.

Status Monitor

This reports the printer status (any errors that may happen with the printer) when printing. The default setting for the Status Monitor is off. If you would like to turn the status monitor on, go the **Advanced** tab, select **Device options** and then select **Status monitor**.

Macro (For HL-5140, HL-5150D and HL-5170DN)

You can save a page of a document as a macro to the printer memory. Moreover, you can execute the saved macro - in other words, you can use the saved macro as an overlay on any document. This will save time and increase printing speed for often used information such as forms, company logos, letter head formats or invoices.

Administrator (For Windows® 95/98/Me users only)

Administrators have the authority to limit the Number of copies, Scaling setting and Watermark setting functions.

- Password

  Enter the password into this box.
- Set Password

  Click here to change the password.
- COPY LOCK

  Lock the copy pages selection to prevent multiple copy printing.
- WATERMARK LOCK

  Lock the current settings of the Watermark option to prevent changes being made.
- SCALING LOCK

  Lock the scaling setting as shown below.

  1 in 1

  100%

Insert Command/File (For HL-5140, 5150D and 5170DN: For Windows® 95/98/Me users only)

This option allows data to be inserted into a print job.

Using this function allows you to do the following.

- Insert a print file or tiff format file into a print job.
- Insert a text string into a print job.
- Insert a macro, which is saved in printer memory, into a print job.

Page Protection

'Page Protection' refers to a setting that reserves additional memory for the creation of full page images. Selections are AUTO, OFF, Printer Default, LTR (Letter-size paper), A4 or LGL (legal-size-paper). The page protection feature allows the printer to create the full page image to be printed in memory before physically moving the paper through the printer. When the image is very complicated and the printer has to wait to process the image before printing, use this function.

Print Date & Time

Date: Specifies the format of the date.

Time: Specifies the format of the time.

Density adjustment

Increase or decrease the print density.

HRC

This option allows you to change the HRC setting on your Brother HL-5100 series printer. HRC is a special function that offers improved print quality of characters and graphics that conventional laser printers cannot attain with resolutions of 300 or 600 dpi.

- Printer Default: The setting will match that of the printer.
- Light
- Medium
- Dark.
- Off: Turn HRC off

TrueType Mode (For HL-5140, HL-5150D and HL-5170DN)

TrueType fonts may be sent to your printer in one of the following ways:

- Download as TrueType (For HL-5150D and HL-5170DN)
- Download as Bit Image
- Print as Graphics

Accessories tab

When you install the optional lower tray unit, you can add it and select its settings in the **Accessories** tab as follows.

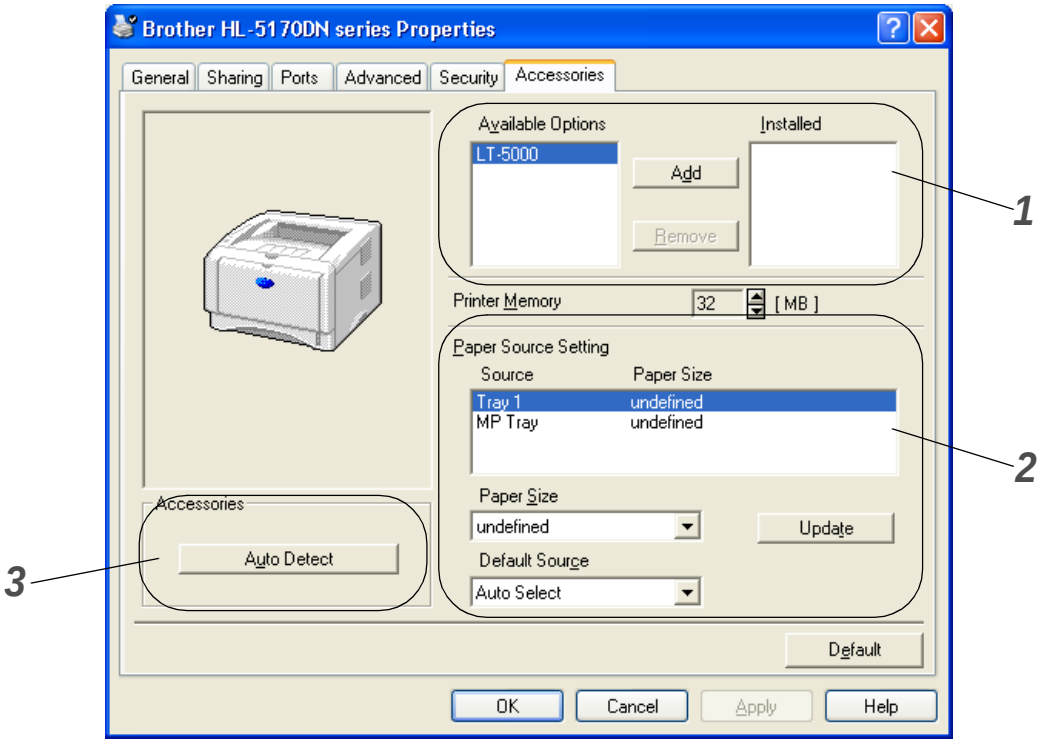

1 You can manually add and remove the options that are installed on the printer. Tray settings will match the installed options.

2 Paper Source Setting

This feature recognizes the paper size in each paper tray.

3 Auto detection of printer options (For HL-5140, HL-5150D and HL-5170DN)

The **Auto Detect** function finds the currently installed devices and shows the available settings in the printer driver. When you click the **Auto Detect** button, options that are installed on the printer will be listed. You can manually add or remove options.

Auto Detect function may not be available under certain printer conditions.

Support tab

If you are using Windows NT® 4.0, Windows® 2000 or XP, you can access the **Support** tab by clicking **Printing Preferences...** in the **General** tab of the **Printer Properties** screen.

- You can download the latest driver or by accessing the Brother Solutions Center at http://solutions.brother.com
- You can see the printer driver version.
- You can check the current driver settings.
- You can print the printer settings page and the internal fonts list. (The internal fonts list is not available for HL-5130.)

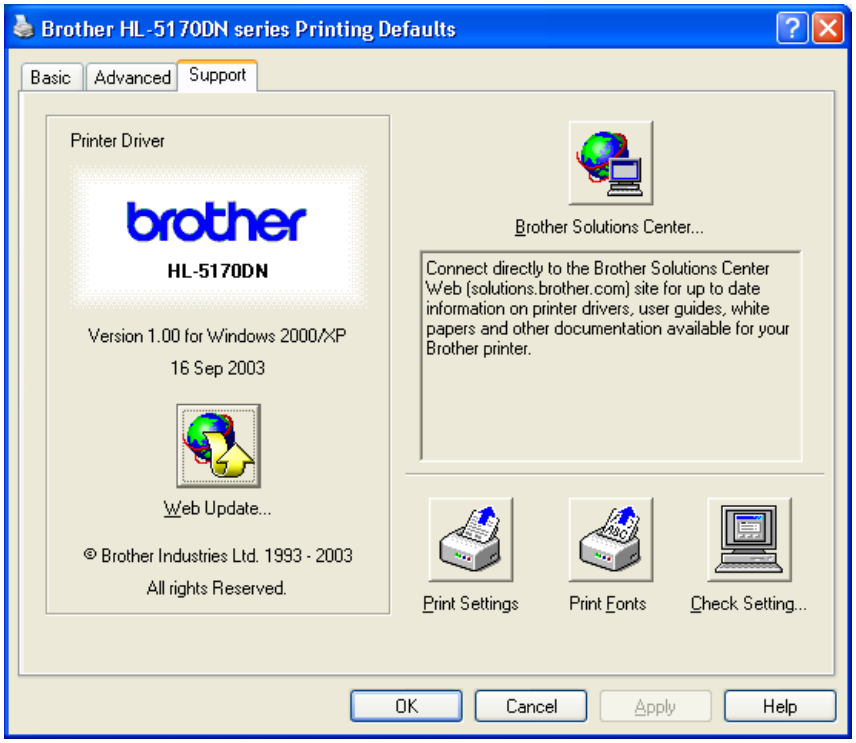

Features in the PS printer driver

This section is for HL-5150D and HL-5170DN.

You can download the latest driver by accessing the Brother Solutions Center at http://solutions.brother.com

For more information, please see the **Help** text in the printer driver.

The screens in this section are from Windows® XP.
The screens on your PC will vary depending on your Operating System.

Ports tab

Select the port where your printer is connected or the path to the network printer you are using.

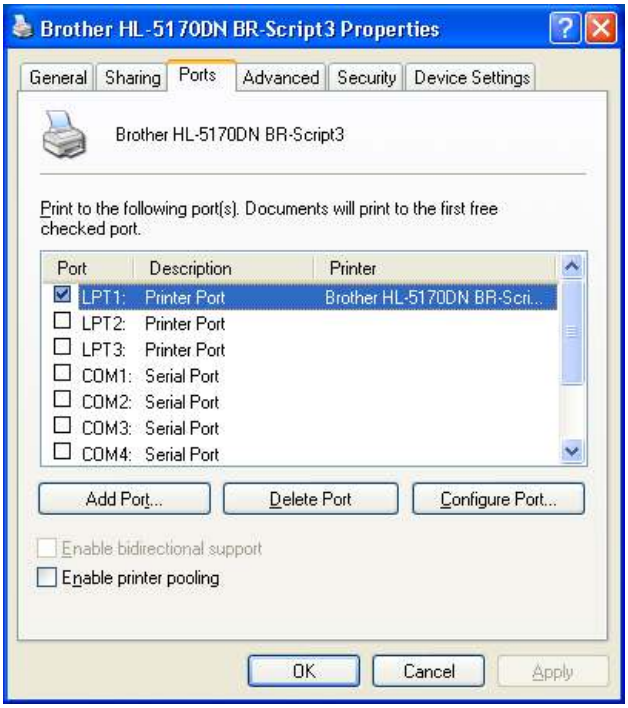

Device Settings tab

Select the options you installed.

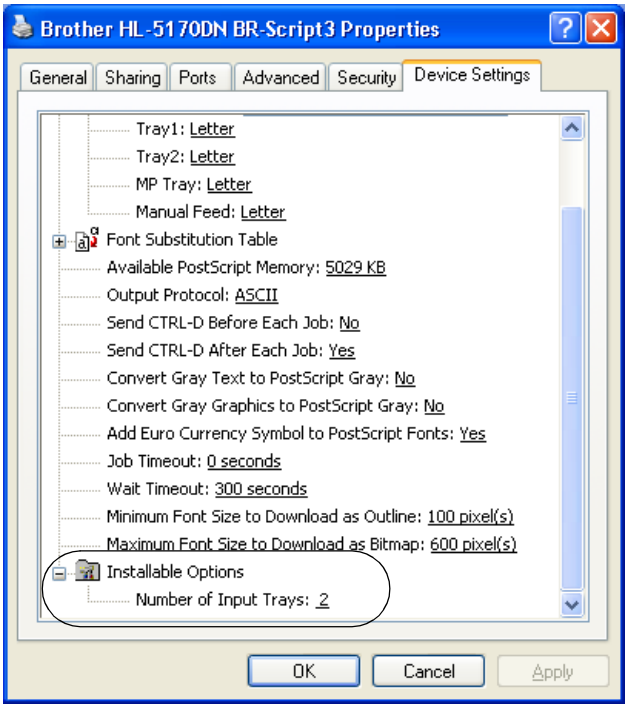

Layout tab

If you are using Windows NT® 4.0, Windows® 2000 or XP, you can access the **Layout** tab by clicking **Printing Preferences...** in the **General** tab of the **Printer BR-Script3 Properties** screen.

You can change the Layout setting by selecting the setting in the **Orientation**, **Page Order** and **Page Per Sheet**.

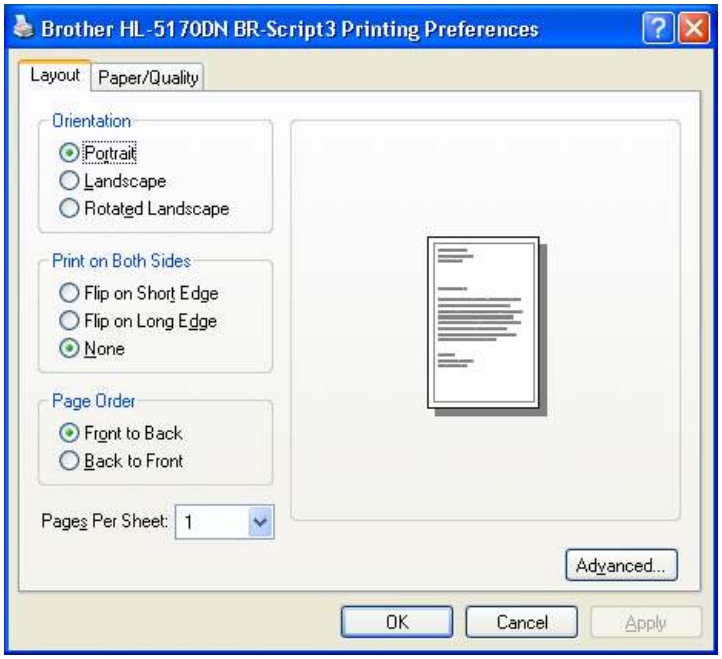

Paper / Quality tab

Select the **Paper Source**.

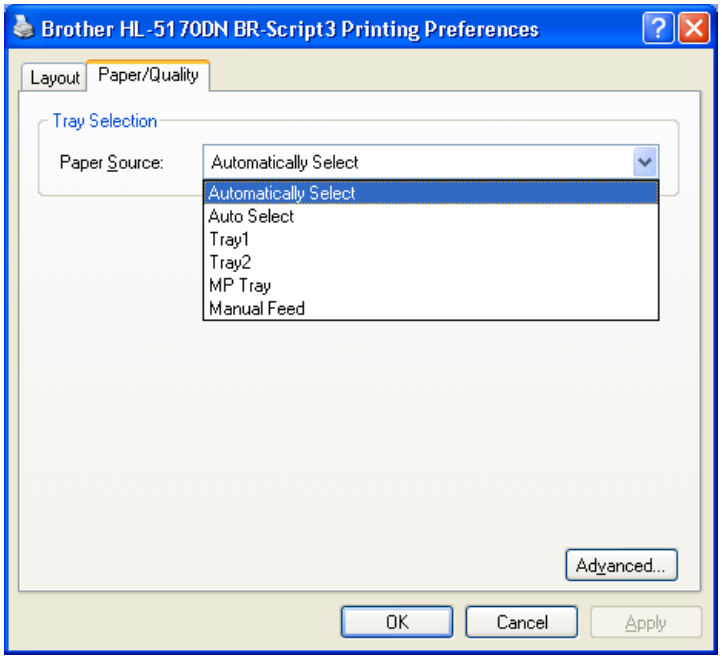

Advanced options

If you are using Windows NT® 4.0, Windows® 2000 or XP, you can access the **Advanced Options** tab by clicking **Advanced...** button in the **Layout** tab or the **Paper / Quality** tab.

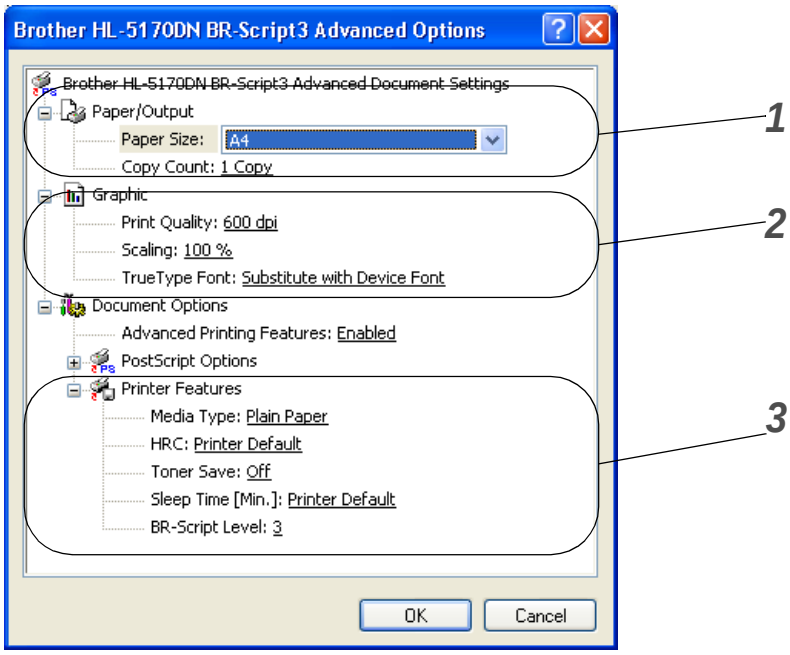

1. Select the **Paper Size** and **Copy Count**.
2. Set the P**rint Quality**, **Scaling** and **TrueType Font** setting.
3. You can change settings by selecting the setting in the Printer Features list:
   - Media Type
   - Toner Save
   - Sleep Time
   - BR-Script Level

Toner Save

You can save running costs by turning on the **Toner Save** setting, which reduces the print density.

Sleep Time

When the printer does not receive data for a certain period of time (timeout), it enters sleep mode. Sleep mode acts as though the printer was turned off. The default timeout is 5 minutes. When **Intelligent Sleep Mode** is selected, it is automatically adjusted to the most suitable time-out setting depending on the frequency of your printer use. While the printer is in sleep mode, the LED is off, but the printer can still receive data from the computer. Receiving a print file or document automatically wakes up the printer to start printing. Pressing the **GO** button will also wake up the printer.

Sleep mode can be turned off. To turn sleep mode off, go to the **Advanced** tab, select **Device Options** and then select **Sleep Time**. Double click the word **Sleep Time** in the **Sleep Time** screen, this will allow the **Sleep Time Off** function to appear, click **Sleep Time Off** to stop the printer going into sleep mode. The **Sleep Time Off** function can be hidden by double clicking the word **Sleep Time** in the **Sleep Time** screen again. We recommend that you keep Sleep mode on to save power.

For Macintosh®

This printer supports Mac OS® 8.6 to 9.2 and Mac OS® X 10.1 to 10.2.

You can download the latest driver by accessing the Brother Solutions Center at http://solutions.brother.com

The screens in this section are from Mac OS® X 10.1
The screens on your Macintosh® will vary depending on your Operating System.

Page setup

You can set the **Paper size**, **Orientation** and **Scale**.

Brother Laser driver / PS driver

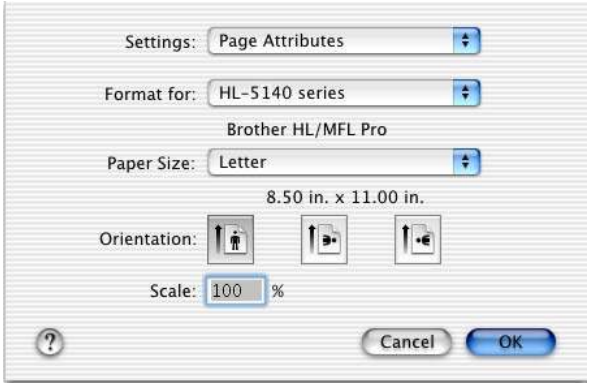

Layout

Set the **Layout**, **Pages per Sheet** and other settings.

Brother Laser driver / PS driver

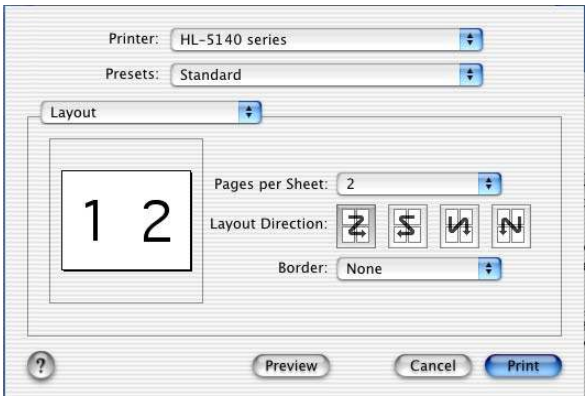

Pages per sheet: Select how many pages will appear on each side of the paper.

Layout direction: When you specify the Pages per sheet, you can also specify the direction of the layout.

Border: If you want to add a border, use this function.

Print on Both Sides: When you want to print on both sides of the paper, use this function.

Specific settings

Set the **Media Type**, **Resolution**, **Toner Save**, and other settings.

Brother Laser driver

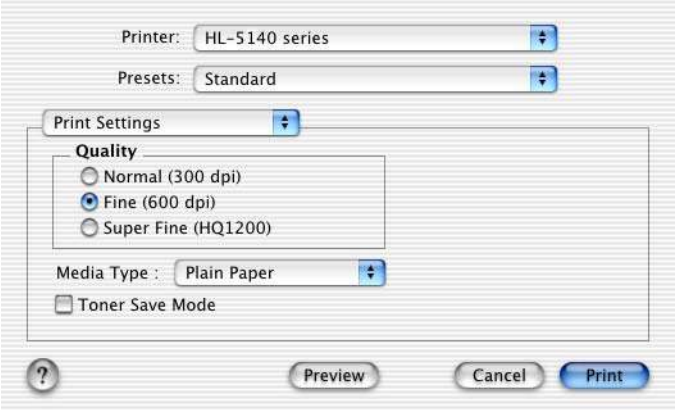

PS driver

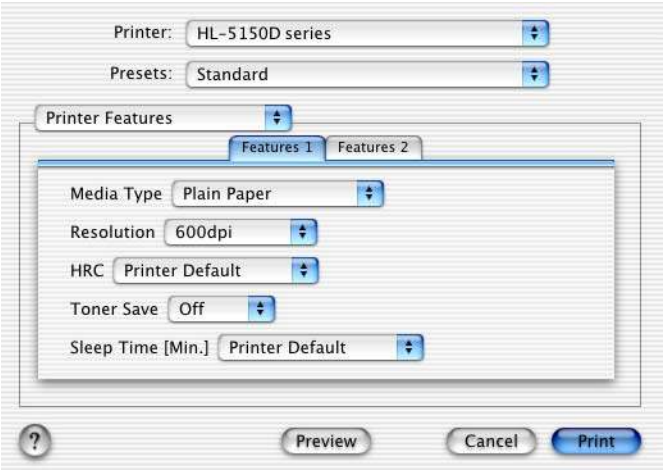

You can change settings by selecting the setting in the **Printer Features** list:

- Media Type
- Resolution
- Toner Save
- Sleep Time (For PS driver only)

Resolution

You can change the resolution as follows:

- 300 dpi
- 600 dpi
- HQ 1200 dpi

Toner Save

You can save running costs by turning on the **Toner Save** setting, which reduces the print density.

Sleep Time

When the printer does not receive data for a certain period of time (timeout), it enters sleep mode. Sleep mode acts as though the printer was turned off. The default timeout is 5 minutes. When **Intelligent Sleep Mode** is selected, it is automatically adjusted to the most suitable time-out setting depending on the frequency of your printer use. While the printer is in sleep mode, the LED is off, but the printer can still receive data from the computer. Receiving a print file or document automatically wakes up the printer to start printing. Pressing the **GO** button will also wake up the printer.

Sleep mode can be turned off. To turn sleep mode off, go to the **Advanced** tab, select **Device Options** and then select **Sleep Time**. Double click the word **Sleep Time** in the **Sleep Time** screen, this will allow the **Sleep Time Off** function to appear, click **Sleep Time Off** to stop the printer going into sleep mode. The **Sleep Time Off** function can be hidden by double clicking the word **Sleep Time** in the **Sleep Time** screen again. We recommend that you keep Sleep mode on to save power.

Software

This section is for Windows®.

Software for Networks

This section is for HL-5170DN.

BRAdmin Professional

The BRAdmin Professional software is a utility for managing your Brother network enabled printers that are running under Windows® 95/98/Me, Windows NT® 4.0 and Windows® 2000/XP.

It allows you to easily configure and check the status of your printer on the network.

Driver Deployment Wizard

This installer includes the Windows® PCL driver and Brother network port driver (LPR and NetBIOS). The administrator should set up the IP address, Gateway and Subnet with BRAdmin Professional before using this software.

If the administrator then installs the printer driver and port driver using this software, the administrator can save the file to the file server or send the file by E-mail to users. Then, each user just clicks that file to have the printer driver, port driver, IP address, and so on, automatically copied to their PC.

Web BRAdmin

The Web BRAdmin software is designed to manage all LAN/WAN Brother network connected devices. By installing the Web BRAdmin server software on a computer running IIS*, Administrators with a Web browser can connect to the Web BRAdmin server, which then communicates with the device itself. Unlike the BRAdmin Professional software - which is designed for Windows® systems only - the Web BRAdmin server software can be accessed from any client computer with a web browser that supports Java 2.

You can download the Web BRAdmin software from our web site at
http://solutions.brother.com/webbradmin

IIS* = Internet Information Server 4.0 or 5.0

Web BRAdmin and Internet Information Server 4.0 is supported on the following operating systems:

- Windows NT® 4.0 Server

Web BRAdmin and Internet Information Server 5.0 is supported on the following operating systems:

- Windows® 2000 Professional
- Windows® 2000 Server
- Windows® 2000 Advanced Server
- Windows® XP Professional

Automatic Emulation Selection

This section is for HL-5150D and HL-5170DN.

This printer has an Automatic Emulation Selection feature. When the printer receives data from the computer, it automatically chooses the emulation mode. This feature has been set at the factory to ON.

The printer can choose from the following combinations:

Setting 1 (default)	Setting 2
HP LaserJet	HP LaserJet
BR-Script 3	BR-Script 3
EPSON FX-850	IBM ProPrinter XL

3 Control panel

This section refers to the four Light Emitting Diodes (LEDs) (**Toner**, **Drum**, **Paper**, **Status**) and the two control panel buttons (**Job Cancel**, **Go**) on the control panel.

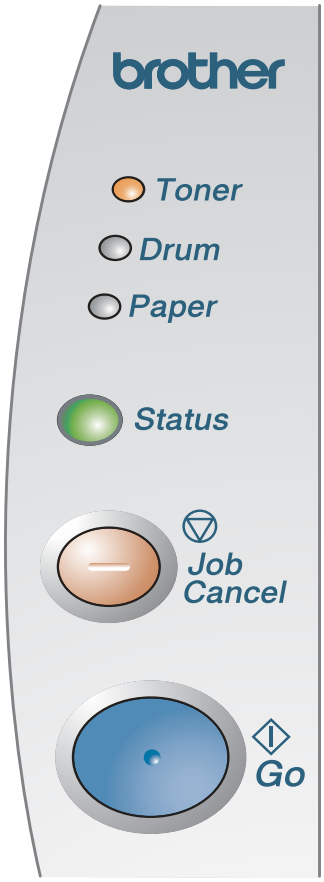

Figure 3-1

The LED indications shown in the table below are used in the illustrations in this chapter.

	LED is off
or or	LED is on
or or	LED is blinking

When the power switch is off or the printer is in Sleep mode, all the LEDs are off.

LED	Printer status
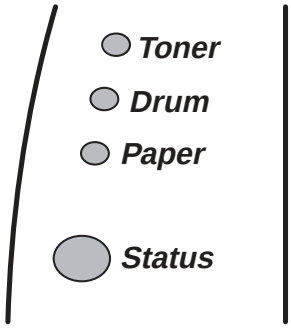 **Figure 3-2**	**Sleep mode** The power switch is off or the printer is in Sleep mode. Pressing the **Go** button wakes up the printer from Sleep mode to Ready mode.
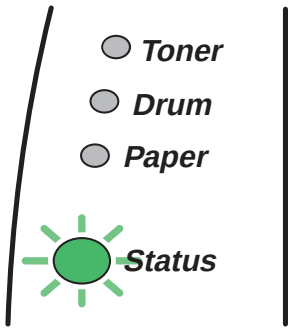 **Figure 3-3**	**Warming up** The printer is warming up.
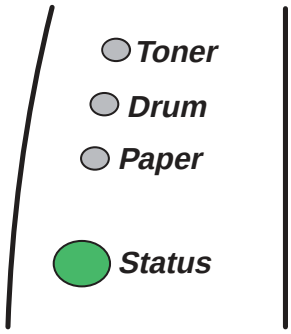 **Figure 3-4**	**Ready to print** The printer is ready to print.
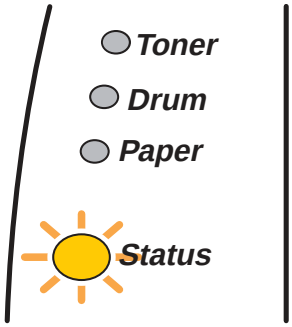 **Figure 3-5**	**Receiving data** The printer is either receiving data from the computer, processing data in memory or printing the data.

LED	Printer status
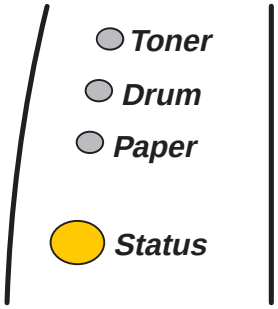 **Figure 3-6**	**Data remaining in memory** Print data remains in the printer memory. If the **Status** LED is on for a long time and nothing has printed, press the **Go** button to print the remaining data.
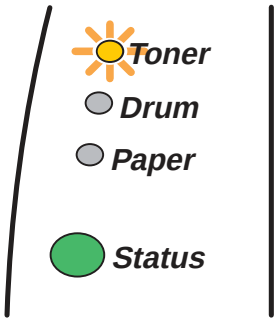 **Figure 3-7**	**Toner low** Indicates that the toner cartridge is nearly empty. Purchase a new toner cartridge and have it ready for when Toner Empty is indicated. The **Toner** LED alternates turning on for 2 seconds and off for 3 seconds.
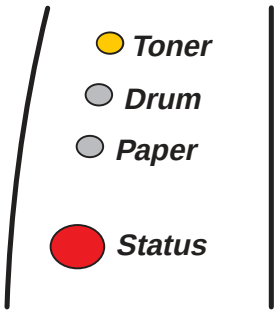 **Figure 3-8**	**Toner empty** Replace the toner cartridge with a new one. See *Replacing the toner cartridge* on page 5-3.
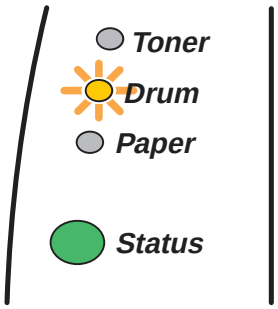 **Figure 3-9**	**Drum unit near end of life** The drum unit is near the end of its life. We recommend that you obtain a new drum unit to replace the current one. See *Replacing the drum unit* on page 5-9. The **Drum** LED alternates turning on for 2 seconds and off for 3 seconds.

LED	Printer status
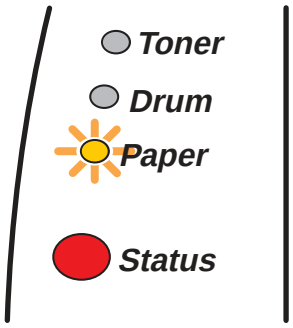 **Figure 3-10**	**Paper jam** Clear the paper jam. See *Paper jams and how to clear them* on page 6-6. If the printer does not start printing, press the **Go** button.
	No paper Put paper in the printer. See *Printing on plain paper* in Chapter 1. Then press the **Go** button.
	Misfeed Put the paper back in properly, and then press the Go button. The printer will start printing again.
	Duplex Size Error (For HL-5150D and HL-5170DN) Press the **Go** button. Specify the printable paper size. The paper size you can use for Duplex printing is A4, Letter or Legal.
	No Duplex Tray (For HL-5150D and HL-5170DN) Install the Duplex tray into the printer.
	Duplex Lever Error (For HL-5150D and HL-5170DN) Move the Duplex lever to the correct position.
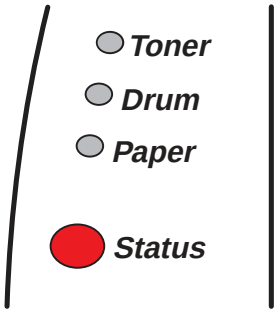 **Figure 3-11**	**Front Cover Open** Close the front cover of the printer.
	Jam Clear Cover Open Close the jam clear cover of the printer. See *page 6-9*.
	Face up Open (For HL-5150D and HL-5170DN: When you use the duplex printing function) Close the face-up output tray of the printer.

Service call indications

If there is an error that cannot be cleared by the user, the printer will show that a service call is needed by lighting up all the LEDs as shown in Figure 3-12.

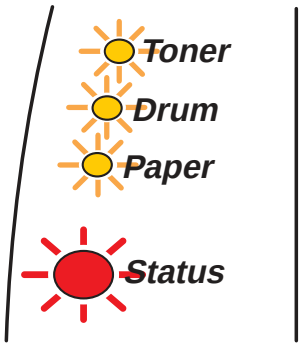

Figure 3-12

If you see the service call indication above, follow the steps below:

1. Take out the DIMM (Dual Inline Memory Module) from your printer, if you have a DIMM installed.
2. Turn off the power switch, wait a few seconds, and then turn it back on and try to print again.

If you cannot clear the error and see the same service call indication after turning the printer back on, call your dealer or a Brother authorized service representative.

When you press the **Go** and the **Job Cancel** buttons together, the LEDs will light up with one of the combinations shown in Table 1. See *Table 1: LED indications while pressing Go and Job Cancel* on page 3-6 to identify the error.

For example, the LED indication below shows a fixing unit failure.

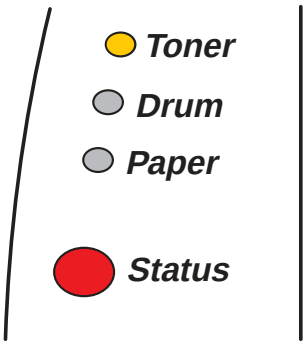

Figure 3-13

Table 1: LED indications while pressing Go and Job Cancel

LEDs	Fixing unit failure*1	Laser unit failure	Main motor failure	Main PCB failure	Engine PCB failure	DIMM failure
Toner	🟡	⚪	⚪	🟡	⚪	⚪
Drum	⚪	🟡	⚪	⚪	🟡	⚪
Paper	⚪	⚪	🟡	⚪	⚪	🟡
Status	🔴	🔴	🔴	🟡	🟡	🟡

Make a note of the indication and report the error status to your dealer or a Brother authorized service representative by referring to the above table.

Make sure that the front cover is fully closed before you report a service call.

*1 If this error occurs, turn the power switch off, wait a few seconds, and then turn it on again. Leave the printer for 10 minutes with the power on. If the error occurs again, consult your dealer or Brother authorized service representative.

Control panel buttons

The control panel buttons have the following functions:

Cancel printing

If you press the **Job Cancel** button while printing, the printer will immediately stop printing and will then eject the paper.

Wake-up

If the printer is in Sleep mode, press the **Go** or **Job Cancel** button to wake the printer up and go to the Ready state.

Form feed

If the yellow **Status** LED is on, press the **Go** button. The printer will print any data that is left in the printer memory.

Error recovery

If there is an error, the printer will recover automatically from some errors. If an error is not automatically cleared, press the **Go** button to clear the error, and then continue to use the printer.

Reprint

If you want to reprint a document that has just been printed, you can do this by pressing and holding down the **Go** button until all four LEDs are lit and then release the **Go** button.

Print a test page

You can use the **Go** button or the printer driver to print a test page.

Using control panel button

1. Turn off the printer.
2. Make sure that the front cover is closed and the power cord is plugged in.
3. Hold down the **Go** button as you turn on the power switch. All the LEDs light up and then go off again. Keep the **Go** button pressed down until the **Toner** LED comes on. When the **Toner** LED comes on, release the **Go** button.
4. Press the **Go** button again. The printer will print a test page.

Using the printer driver

If you are using Brother's Windows® PCL printer driver, click the **Print Test Page** button. It is in the **General** tab of the Windows® printer driver.

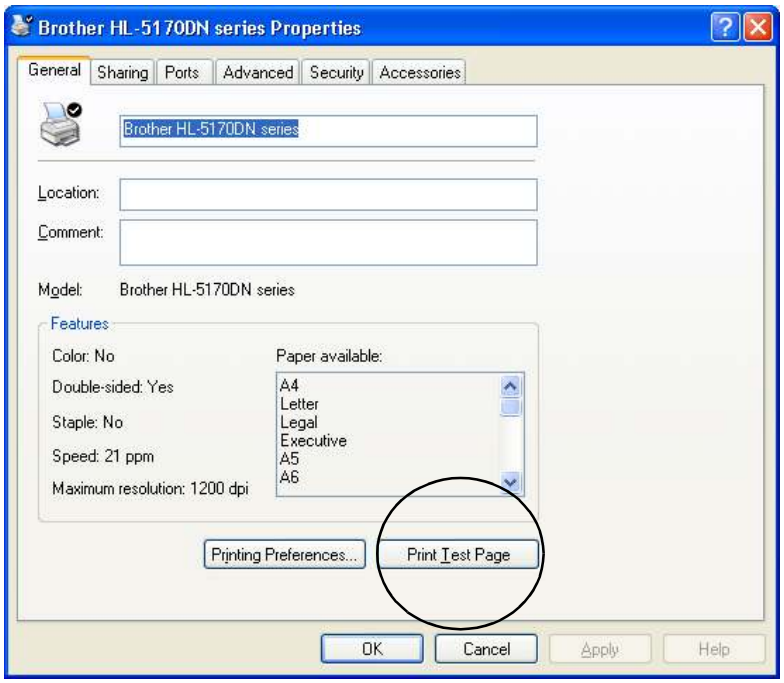

Printer Settings

You can print the current settings using the control panel button or printer driver.

Using the control panel button

1. Make sure that the front cover is closed and the power cord is plugged in.
2. Turn on the printer and wait until the printer is in the Ready state.
3. Press the **Go** button three times. The printer will print the current printer settings.

Using the printer driver

If you are using Brother's Windows® PCL printer driver, you can print the current printer settings by clicking the **Print Settings** button in the **Support** tab.

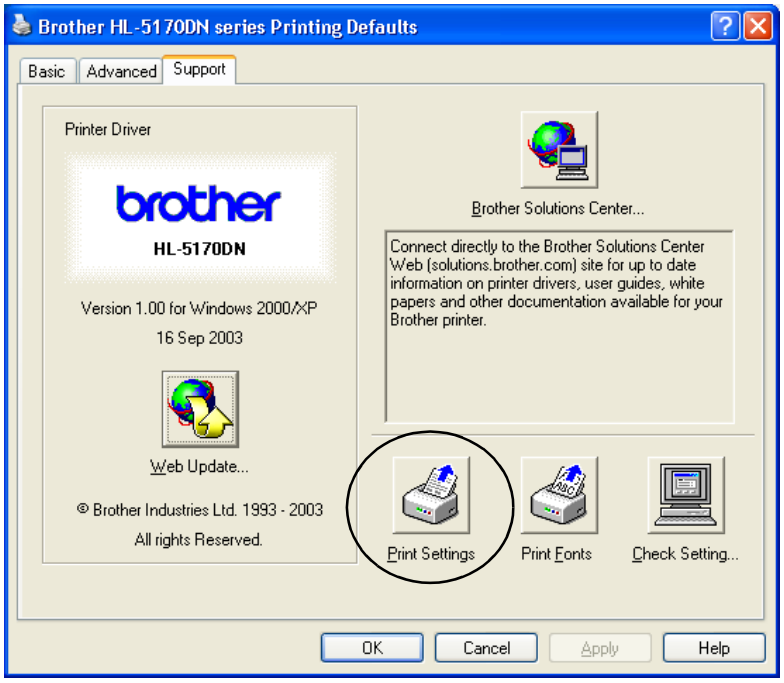

Print fonts (Not available for HL-5130)

You can print a list of the internal fonts using the control panel button or printer driver.

Using the control panel button

1. Turn off the printer.
2. Make sure that the front cover is closed and the power cord is plugged in.
3. Hold down the **Go** button as you turn on the power switch. All the LEDs light up and then go off again. Keep the **Go** button pressed down until the **Toner** LED comes on. When the **Toner** LED comes on, release the **Go** button.
4. Press and hold the **Go** button again until the **Drum** LED comes on.
5. When the **Drum** LED comes on, release the **Go** button. The printer will print a list of the internal fonts.

Using the printer driver (Not available for HL-5130)

If you are using Brother's Windows® PCL printer driver, you can print a list of the internal fonts by clicking the **Print Fonts** button in the **Support** tab.

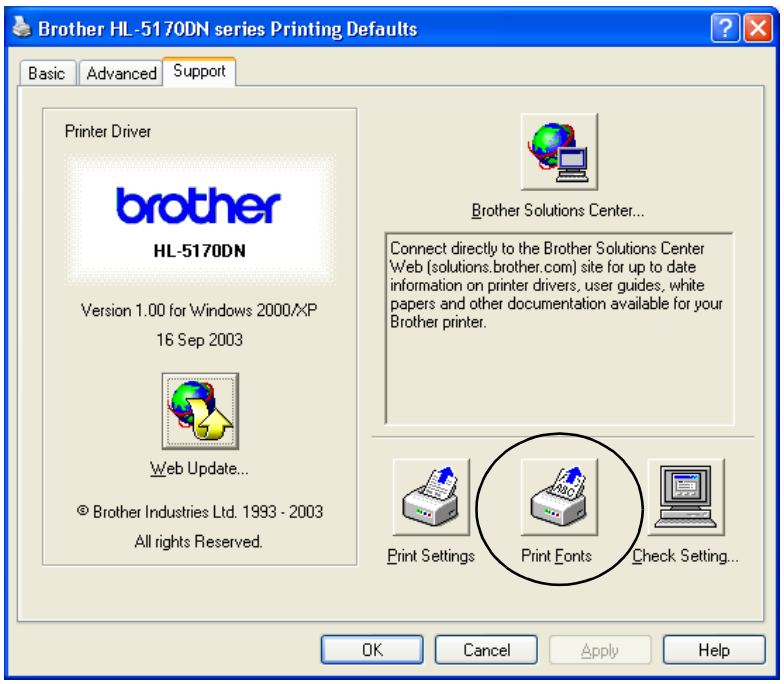

Network factory default setting (For HL-5170DN)

If you wish to reset the print server back to its default factory settings (resetting all information such as the password and IP address information), please follow these steps:

1. Turn off the printer.
2. Make sure that the front cover is closed and the power cord is plugged in.
3. Hold down the **Go** button as you turn on the power switch. All the LEDs will light up. Keep the button pressed down until the **Toner** LED comes on. When the **Toner** LED comes on, release the **Go** button.
4. Hold down the **Go** button and keep it pressed down until the yellow **Status** LED comes on. When the **Status** LED comes on, release the **Go** button.
5. When all the LEDs light up again, the printer will start warming up. The print server has been reset to its default factory settings.

Disabling the APIPA protocol (For HL-5170DN)

If you wish to automatically disable the APIPA protocol, please follow these steps:

1. Turn off the printer.
2. Make sure that the front cover is closed and the power cord is plugged in.
3. Hold down the **Go** button as you turn on the power switch. All the LEDs will light up. Keep the button pressed down until the **Toner** LED comes on. When the **Toner** LED comes on, release the **Go** button.
4. Hold down the **Go** button and keep it pressed down until the green **Status** LED comes on. When the **Status** LED comes on, release the **Go** button.

- For more information on APIPA, see the Network User's Guide or visit http://solutions.brother.com
- You can also disable the APIPA protocol using EWS, BRAdmin Professional or Web BRAdmin.

4 Options

This printer has the following optional accessories. You can increase the capabilities of the printer with these items. Click the symbol ⓘ in the table to see the information for each item.

Model	DIMM	Lower tray unit	Print server
HL-5130	N/A	N/A	ⓘ
HL-5140	ⓘ	ⓘ	ⓘ
HL-5150D	ⓘ	ⓘ	ⓘ
HL-5170DN	ⓘ	ⓘ	Standard

DIMM

We recommend that you expand the printer memory to avoid any memory full errors.

For HL-5140 and HL-5150D

This printer has 16 MB of standard memory and a slot for optional additional memory. The memory can be expanded up to a total of 144 MB by installing a commercially available DIMM (Dual In-line Memory Module).

For HL-5170DN

This printer has 32 MB of standard memory and a slot for optional additional memory. The memory can be expanded up to a total of 160 MB by installing a commercially available DIMM (Dual In-line Memory Module).

The following DIMM size can be installed:

■ 16 MB	TECHWORKS	12456-0001
■ 32 MB	TECHWORKS	12457-0001
■ 64 MB	TECHWORKS	12458-0001
■ 128 MB	TECHWORKS	12459-0001

For more information, visit Techworks web site at www.techworks.com

In general, DIMM must have the following specifications:

Type	100 pin and 32 bit output
CAS Latency	2 or 3
Clock Frequency	66MHz or more
Capacity	16, 32, 64 MB or 128 MB
Height	35 mm (1.4 inches) or less
Parity	NONE
DRAM Type	SDRAM 4 Bank

- Additional memory is useful and may be necessary if you are using the Page Protection function.

(For HL-5170DN)

- You have to expand the printer memory by adding a DIMM to use the FTP/IPP protocol.

Installing additional memory

1 Turn off the printer power switch, and then unplug the printer. Disconnect the interface cable from the printer.

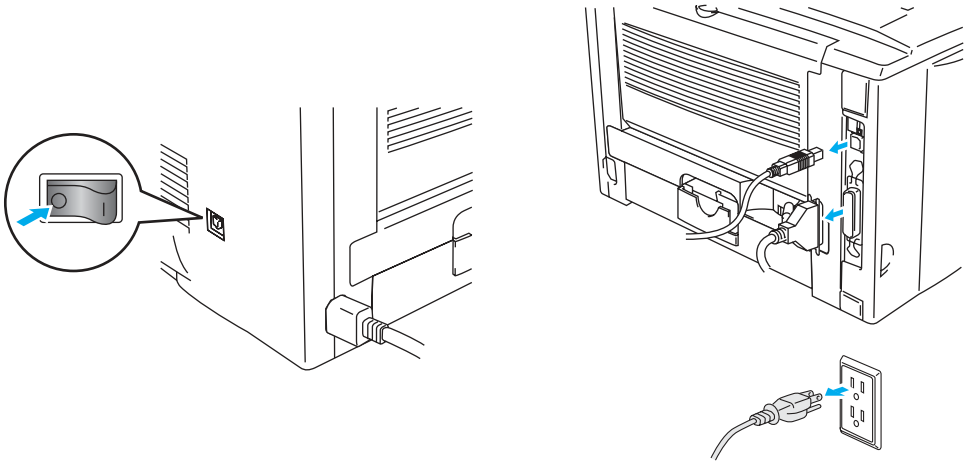

Figure 4-1

Caution

Make sure you turn the printer OFF before you install or remove the DIMM.

2 Remove the side cover. Use a coin to loosen the two screws, and then remove the metal plate.

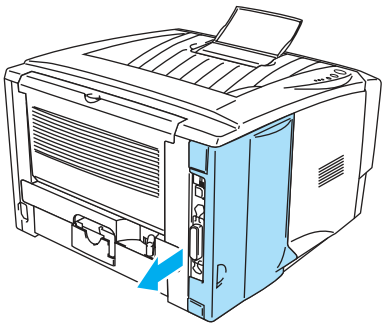

Figure 4-2

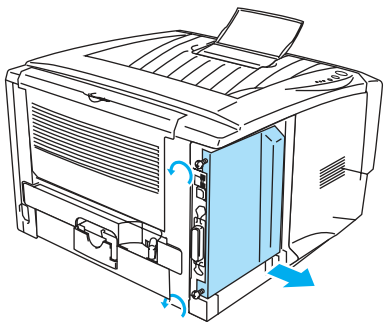

Figure 4-3

3 Unpack the DIMM and hold it by the edges.

Caution

DIMM boards can be damaged by even a small amount of static electricity. Do not touch the memory chips or the board surface. Wear an antistatic wrist strap when you install or remove the board. If you do not have an antistatic wrist strap, frequently touch the bare metal on the printer.

4 Hold the DIMM by the side edges. Line up the notches on the DIMM with the DIMM slot. (Check that the locks on each side of the DIMM slot are open or facing outwards.)

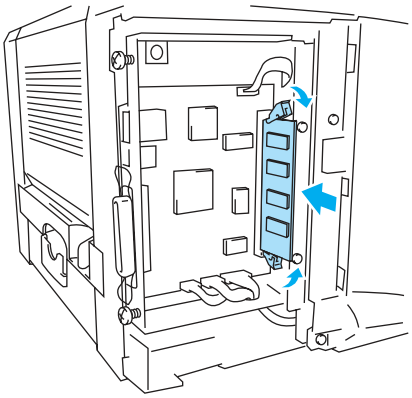

Figure 4-4

5 Press the DIMM straight into the slot (press firmly). Make sure the locks on each side of the DIMM click into place. (To remove a DIMM, you must release the locks.)

6 Put the metal plate back on and secure the metal plate with the two screws.

7 Put the side cover back on.

8 Reconnect the interface cable (printer cable) to your computer. Plug the printer back in, and then turn on the printer power switch.

To check that you have installed the DIMM correctly, print the printer settings by using the selection in the driver and check the printout to make sure it shows the additional memory. See *Printer Settings* and *Print fonts* in Chapter 3.

Lower tray unit (LT-5000) (Not available for HL-5130)

The lower tray unit is an optional device that can hold extra paper. It can hold a maximum of 250 sheets of paper (80 g/m^2 or 21 lb).

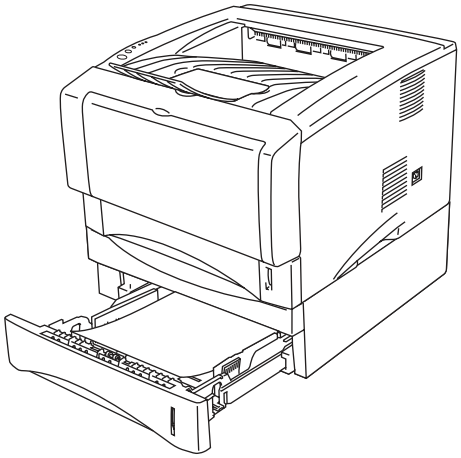

Figure 4-5

If you want to buy an optional lower tray unit, call the dealer you bought the printer from or Brother Customer Service.

To install the lower tray unit, please see the instructions supplied with the lower tray unit.

Print server (NC-2100p) (For HL-5130, HL-5140 and HL-5150D)

An optional network print server (NC-2100p) allows you to connect to your network through the parallel interface.

- NC-2100p: TCP/IP, NetBEUI and AppleTalk* protocols
- Superior network and printer management:
  - BRAdmin Professional Windows®-based Management utility.
  - SNMP MIB I and MIB II over IP or IPX
  - Remote console management via TELNET.
  - Embedded web server support.
- Flash memory for easy updating of firmware.

* For HL-5150D.

HL-5170DN already has a built-in 10/100BASE-TX Ethernet Print Server.

5 Routine maintenance

You will need to replace certain parts and clean the printer regularly.

You can see the maintenance video in the **Maintenance Tutorial** section of the CD-ROM we have provided with the printer.

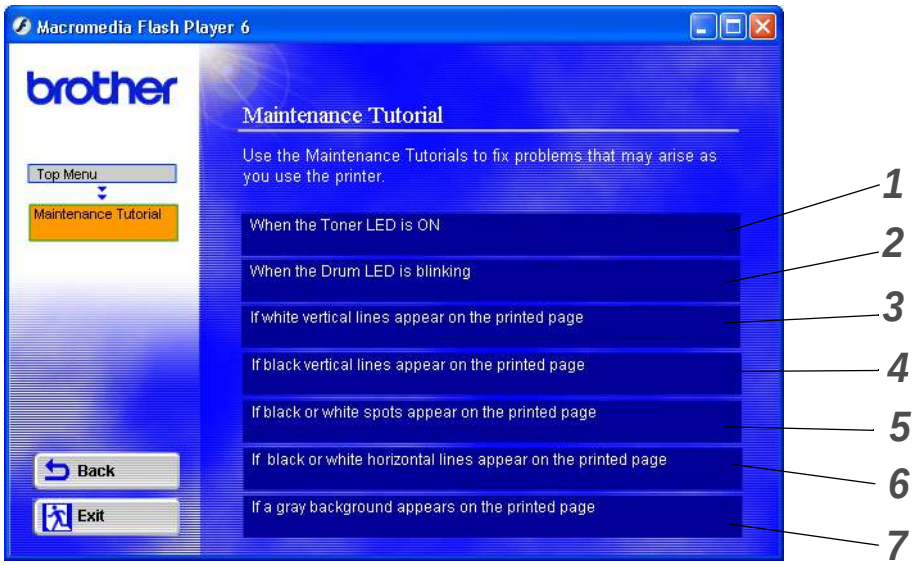

1 You can see how to replace the toner cartridge.
2 You can see how to replace the drum unit.
3 You can see how to clean the scanner window.
4 You can see how to clean the corona wire in the drum unit.
5 You can see how to clean the surface of the OPC in the drum unit.
6 You can see how to clean the scanner window and the corona wire in the drum unit.
7 You can see how to clean the corona wire in the drum unit.

These instructions are also included in *Improving the print quality* on page 6-11.

Toner cartridge

A new toner cartridge contains enough toner to print up to 3,500 (standard cartridge) or up to 6,700 (high yield cartridge) A4 or Letter-size single-sided pages at 5% coverage.

- The amount of toner used varies according to what is printed on the page and the print density setting.
- The more that is printed, the more toner will be used.
- If you change the print density setting for lighter or darker printing, the amount of toner that is used will change.
- Wait to unpack the toner cartridge until immediately before you install it in the printer.

Toner Low message

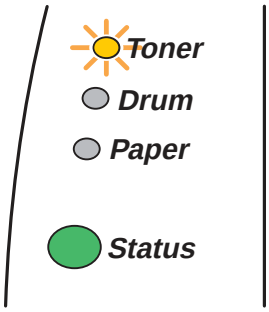

The **Toner** LED alternates turning on for 2 seconds and off for 3 seconds.

Figure 5-1

If the LED shows this message, the toner cartridge has nearly run out of toner. Buy a new toner cartridge and have it ready before you get a Toner Empty message. To put in the toner cartridge, see *Replacing the toner cartridge* on page 5-3.

Toner LED will blink continuously if the toner cartridge is nearly empty.

Toner Empty message

If the LED shows the message below, the printer has run out of toner or the toner is not evenly distributed inside the cartridge.

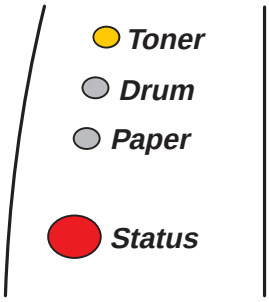

Figure 5-2

Replacing the toner cartridge

To ensure high quality printing, make sure you use quality toner cartridges. When you want to buy toner cartridges, call the dealer you bought the printer from or Brother Customer Service.

We recommend that you clean the printer when you replace the toner cartridge. See *Cleaning* on page 5-12.

1 Press the cover release button and then open the front cover of the printer.

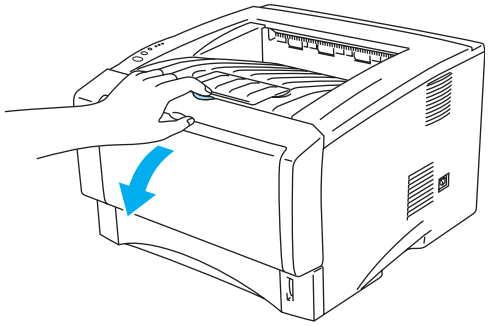

Figure 5-3

2 Pull out the drum unit assembly (drum unit with toner cartridge).

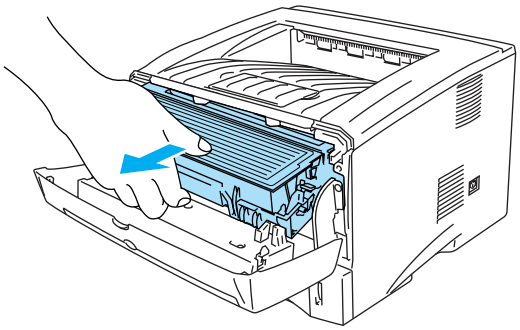

Figure 5-4

Caution

- We recommend that you place the drum unit and toner cartridge assembly on a piece of disposable paper or cloth in case you accidentally spill or scatter toner.
- To prevent damage to the printer from static electricity, do not touch the electrodes shown in Figure 5-5.

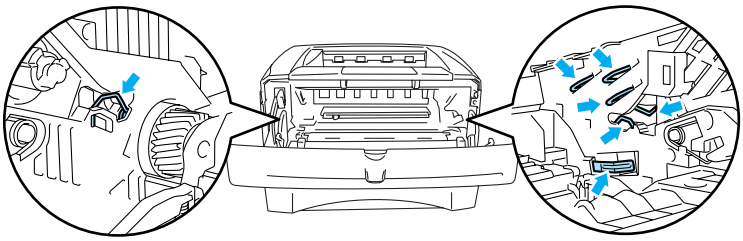

Figure 5-5

3 Push down the blue lock lever and take the toner cartridge out of the drum unit.

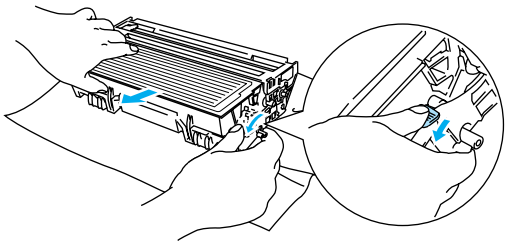

Figure 5-6

Caution

Handle the toner cartridge carefully. If toner scatters on your hands or clothes, immediately wipe or wash it off with cold water.

- Be sure to seal up the toner cartridge tightly so that toner powder does not spill out of the cartridge.
- Discard the used toner cartridge according to local regulations, keeping it separate from domestic waste. If you have questions, call your local waste disposal office.

4 Unpack the new toner cartridge. Hold the cartridge level with both hands and gently rock it from side to side five or six times to spread the toner evenly inside the cartridge.

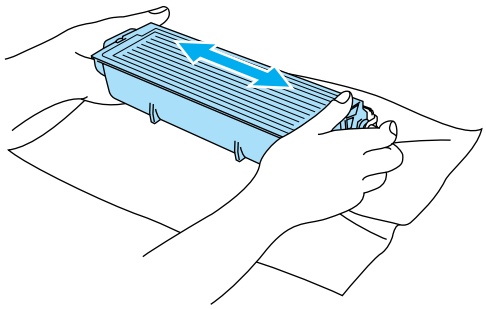

Figure 5-7

Caution

- Wait to unpack the toner cartridge until immediately before you put it in the printer. If toner cartridges are left unpacked for a long time the toner life will be shortened.
- If an unpacked drum unit is put in direct sunlight or room light, the unit may be damaged.
- Brother strongly recommends that you do not refill the toner cartridge provided with your printer. We also strongly recommend that you continue to use only Genuine Brother Brand replacement toner cartridges. Using or attempting to use potentially incompatible toner and/or toner cartridges in your printer may cause damage to the printer itself and/or it may result in unsatisfactory print quality. Our warranty coverage does not apply to any problem that was caused by the use of unauthorized third party toner and toner cartridges. To protect your investment and guarantee your print quality please continue to replace consumed toner cartridges with only Genuine Brother Branded Supplies.
- Printing with a third-party toner or third-party toner cartridge may reduce not only the print quality but also the quality and life of the printer itself. It may also cause serious damage to the performance and life of a drum unit. Warranty coverage does not apply to problems caused by the use of third-party toner or third-party toner cartridges.

5 Pull off the protective cover.

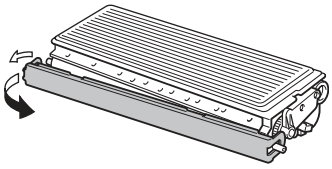

Figure 5-8

Caution

Put the toner cartridge in the drum unit immediately after you have removed the protective cover. Do not touch the shaded parts shown in Figure 5-9 and Figure 5-10 to prevent any degradation to the print quality.

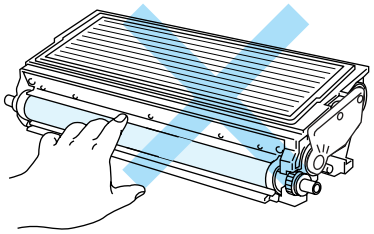

Figure 5-9

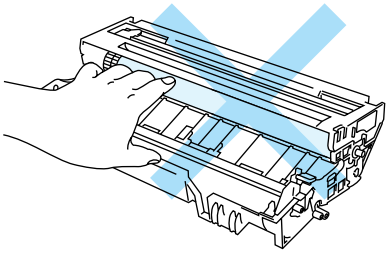

Figure 5-10

6 Put the new toner cartridge firmly into the drum unit you hear it lock into place. If you put it in properly, the lock lever will lift automatically.

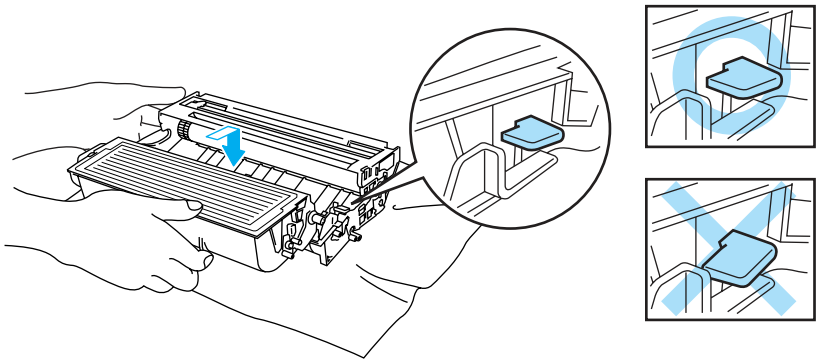

Figure 5-11

Caution

Make sure you insert the toner cartridge properly or it may separate from the drum unit.

7 Clean the primary corona wire inside the drum unit by gently sliding the blue tab from right to left and left to right several times. Return the tab to the home position (▲) before you put the drum unit back in the printer. If you do not, printed pages may have a vertical stripe.

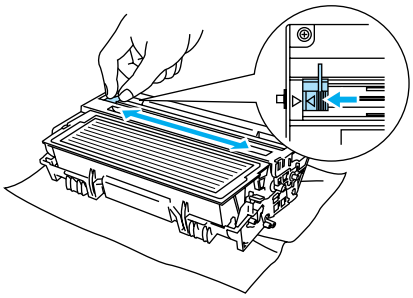

Figure 5-12

8 Put the drum unit assembly back in the printer. Close the front cover of the printer.

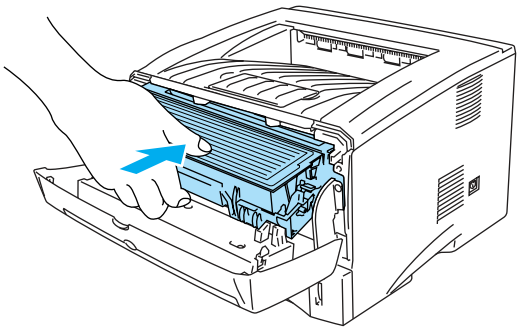

Figure 5-13

Drum unit

This printer can print up to 20,000 pages* with one drum unit.

* At 5% print coverage (A4 or Letter size). The actual number of printed pages will vary depending on the average type of print job and paper.

- There are many factors that determine the actual drum life, such as the temperature, humidity, type of paper, type of toner used, number of pages per print job and so on. Under ideal conditions, the average drum life is estimated at up to 20,000 pages. The actual number of pages that your drum will print may be significantly less than this estimate. Because we have no control over the many factors that determine the actual drum life, we cannot guarantee a minimum number of pages that will be printed by your drum.
- For best performance, use only genuine Brother toner. The printer should be used only in a clean, dust-free environment with adequate ventilation.
- Printing with a third-party drum unit may reduce not only the print quality but also the quality and life of the printer itself. Warranty coverage does not apply to problems caused by the use of third-party drum unit.

Change Drum message

If the LED shows the message below, it means the drum unit is near the end of its life. We recommend that you replace the drum unit with a new one before there is a noticeable deterioration in the print quality.

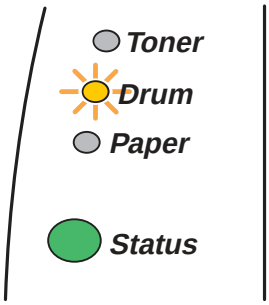

Figure 5-14

Caution

- While removing the drum unit, handle it carefully because it may contain toner.
- Every time you replace the drum unit, you should clean the inside of the printer. See *Cleaning* on page 5-12.

Replacing the drum unit

We recommend that you clean the printer when you replace the drum unit. See *Cleaning* on page 5-12.

Follow these steps to replace the drum unit. You can also view the drum unit replacement method in the instructional video on the supplied CD-ROM:

1. Press the cover release button and then open the front cover of the printer.

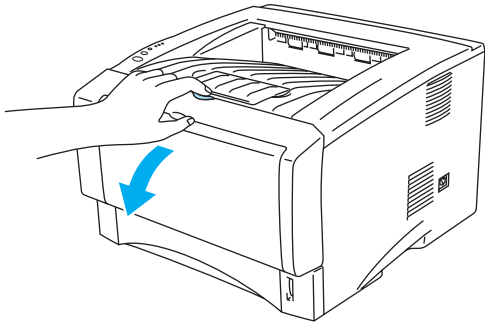

Figure 5-15

2. Pull out the drum unit assembly.

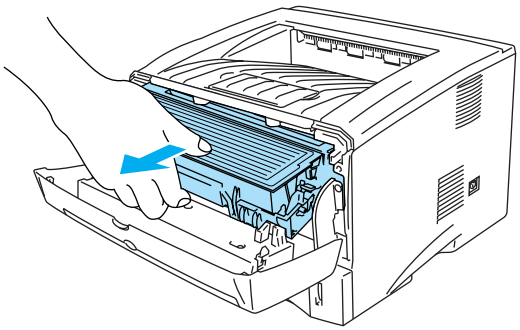

Figure 5-16

Caution

- We recommend that you place the drum unit assembly on a piece of disposable paper or cloth in case you accidentally spill or scatter toner.
- To prevent damage to the printer from static electricity, do not touch the electrodes shown in Figure 5-17.

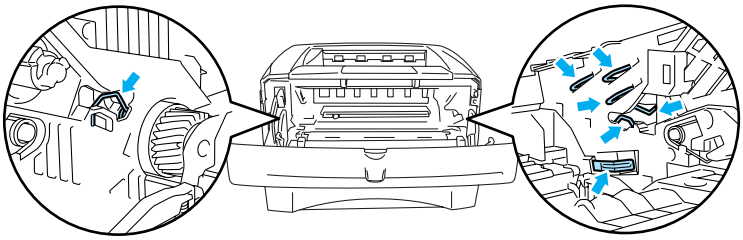

Figure 5-17

3 Push down the blue lock lever and take the toner cartridge out of the drum unit.

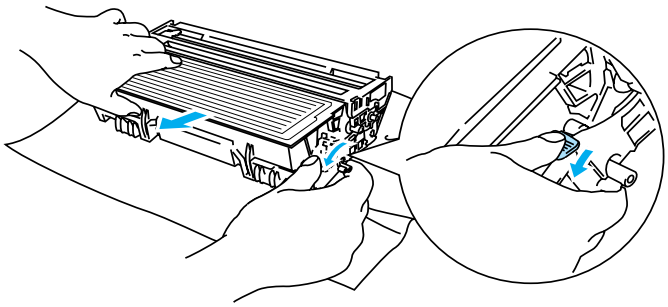

Figure 5-18

Caution

Handle the toner cartridge carefully. If toner scatters on your hands or clothes, immediately wipe or wash it off with cold water.

- Discard the used drum unit according to local regulations, keeping it separate from domestic waste. If you have questions, call your local waste disposal office.
- Be sure to seal up the drum unit tightly in a bag so that toner powder does not spill out of the unit.

4 Unpack the new drum unit.

Caution

Wait to unpack a drum unit until immediately before you put it in the printer. Exposure to direct sunlight or room light may damage the drum unit.

5 Put the toner cartridge firmly into the new drum unit until you hear it lock into place. If you put the cartridge in properly, the blue lock lever will lift automatically.

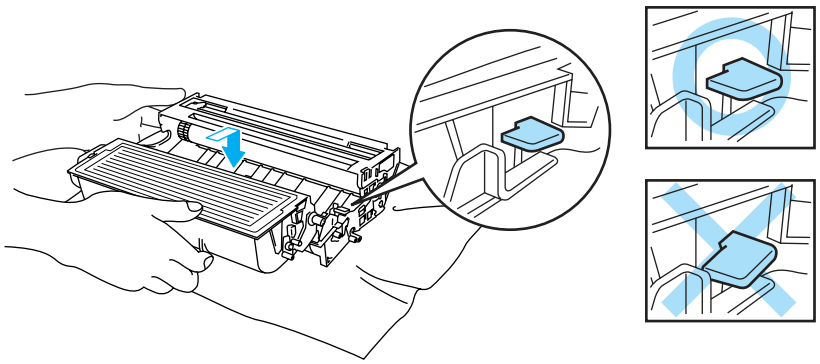

Figure 5-19

Caution

Make sure you insert the toner cartridge properly, or it may separate from the drum unit.

6 Put the drum unit assembly in the printer.
Make sure that the printer is turned on, the front cover is open and the **Status** LED is red.

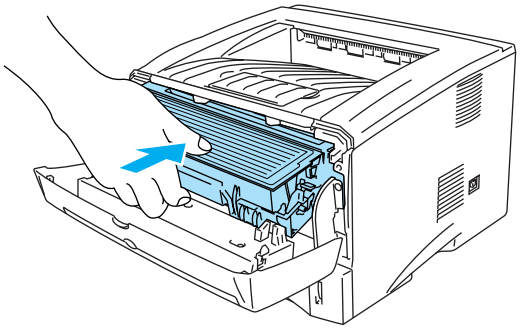

Figure 5-20

7 Reset the drum counter. See the instructions supplied with the new drum unit.

Caution

- The **Drum** LED indication does not disappear until you reset the drum counter.
- Do not reset the drum counter when you replace only the toner cartridge.

8 Close the front cover.

9 Make sure that the **Drum** LED is now off.

Cleaning

Clean the outside and inside of the printer regularly with a dry soft cloth. When you replace the toner cartridge or the drum unit, make sure you clean the inside of the printer. If printed pages are stained with toner, clean the inside of the printer with a dry soft cloth.

See the **Maintenance Tutorial** section in the supplied CD-ROM. You can see instructional videos on your computer screen, showing you how to perform these tasks.

Replacing periodic maintenance parts

You need to replace the periodic maintenance parts regularly to maintain print quality. You should replace the parts listed below after printing the following number of pages.

Item	Approximate Life	To Purchase Replacement
Fixing unit	80,000 pages *	Call Brother Customer Support
Separator pad holder assembly	50,000 pages *	Call Brother Customer Support
Pick up roller assembly	50,000 pages *	Call Brother Customer Support

* The actual number of printed pages may vary depending on your average type of print job and paper. These figures are based on 5% coverage per page.

6 Troubleshooting

Identifying your problem

First, check the following:

- The power plug is connected properly and the printer is turned on.
- All of the protective parts have been removed.
- The toner cartridge and drum unit are installed properly.
- The front cover is fully closed.
- Paper is inserted properly in the paper tray.
- The interface cable is securely connected to the printer and the computer.
- The correct driver for the printer is installed and selected.
- The PC is set up to connect to the correct printer port.

Printer does not print:

If you did not solve your problem with the above checks, please find your problem and then go to the section listed:

Printer LED is blinking

See *LED is blinking* on page 3-1.

Status Monitor Error Message appears

See *Error messages in the status monitor* on page 6-2.

Printer printed an Error Message

See *Error message printouts* on page 6-3.

Paper handling

See *Paper handling* on page 6-5 and *Paper jams and how to clear them* on page 6-6.

Other problems

See *Other problems* on page 6-11.

Pages are printed, however there are problems with:

Print quality

See *Improving the print quality* on page 6-11.

Printout is incorrect

See *Solving print problems* on page 6-17.

Error messages in the status monitor

The Status Monitor will report problems with the printer. Take the corrective actions listed in the following table for the error message that the Status Monitor reports.

The default setting for the Status Monitor is off. If you would like to turn the status monitor on, you can change the setting of the Status Monitor in the **Device Options** of the **Advanced** tab. See *Device Options* on page 2-6.

Error message	Action
Front Cover Open	■ Close the front cover of the printer.
Jam Clear Cover Open	■ Close the jam clear cover of the printer. See *page 6-9*.
Face up Open (For HL-5150D / HL-5170DN)	■ Close the face-up (back) output tray of the printer.
Memory Full	■ Press the **Go** button to print the data remaining in the printer. Press the **Job Cancel** button if you want to delete the data remaining in the printer. ■ Reduce the print resolution or reduce the complexity of your document. ■ Expand the printer memory by adding a commercially available DIMM memory module. See *Installing additional memory* on page 4-2.
No Paper Tray1 **No Paper Tray2** **No Paper Manual Feed** **No Paper Multi Purpose Tray**	■ The paper tray may be out of paper or not properly installed. If it is empty, put a new stack of paper in the paper tray. For HL-5130, put paper in the paper tray and then press the **Go** button. ■ If there is paper in the paper tray, make sure it is straight. If the paper is curled, straighten it before printing. Sometimes it is helpful to remove the paper, turn the stack over and put it back in the paper tray. ■ Reduce the amount of paper in the paper tray, and then try again. ■ Make sure you use paper that meets Brother's recommended paper specifications. See *What kind of paper can I use?* on page 1-5.
Jam Tray 1 **Jam Tray 2** **Jam Inside** **Jam Rear** **Jam Multi Purpose Tray** **Jam Duplex** (For HL-5150D / HL-5170DN)	■ Take out the jammed paper from the indicated area. See *Paper jams and how to clear them* on page 6-6.
Duplex Size Error (For HL-5150D / HL-5170DN)	■ Press the **Go** button. Specify the printable paper size. The paper size you can use for Duplex printing is A4, Letter or Legal.
No Duplex Tray (For HL-5150D / HL-5170DN)	■ Install the Duplex tray into the printer.
Duplex Lever Error (For HL-5150D / HL-5170DN)	■ Move the Duplex lever to the correct position.

Error message	Action
Print Overrun	■ Press the **Go** button to print the data left in the printer. Press the **Job Cancel** button if you want to delete the data left in the printer. ■ If this does not clear the error, reduce the complexity of your document or reduce the print resolution. ■ Expand the printer memory by adding a commercially available DIMM memory module. See *Installing additional memory* on page 4-2. Set page protection to ON by using the supplied Windows® driver or RPC program. ■ Change the following settings in the supplied Windows® driver and try again. The best combination of these settings will vary depending on your document: Graphics Mode TrueType™ mode Use Printer TrueType™ Fonts
Resolution Reduced to Enable Printing (The printer has printed the document at a reduced resolution)	■ Reduce the complexity of your document before you print to prevent automatic reduction of the resolution. ■ Expand the printer memory by adding a commercially available DIMM memory module. See *Installing additional memory* on page 4-2.
Toner Empty	■ See *Replacing the toner cartridge* on page 5-3.
Toner Low	■ Purchase a new toner cartridge and have it ready for when the Toner Empty status is indicated.
Fuser Malfunction	■ Turn the power switch off, wait a few seconds and then turn it on again. ■ Leave the printer for 10 minutes with the power on. If the error occurs again, call your dealer or Brother Customer Service.
Laser BD Malfunction	■ Turn the power switch off, wait a few seconds and then turn it on again. If the error occurs again, call your dealer or Brother Customer Service.
Scanner Malfunction	
D-RAM Error	
NV-RAM Error	
Main Motor Error	
Engine Interface Error	

Error message printouts

The printer will report problems by printing an error message as defined in the following table. Take the corrective actions for the error message.

Error message	Action
MEMORY FULL	■ Press the **Go** button to print the data left in the printer. Press the **Job Cancel** button if you want to delete the data left in the printer. ■ Reduce the print resolution or reduce the complexity of your document. ■ Expand the printer memory by adding a commercially available DIMM. See *Installing additional memory* on page 4-2.

Error message	Action
PRINT OVERRUN	■ Press the **Go** button to print the data left in the printer. Press the **Job Cancel** button if you want to delete the data left in the printer. ■ If this does not clear the error, reduce the complexity of your document or reduce the print resolution. ■ Expand the printer memory by adding a commercially available DIMM. See *Installing additional memory* on page 4-2. ■ Set page protection to ON by using the supplied Windows® driver or RPC program. ■ Change the following settings in the supplied Windows® driver and try again. The best combination of these settings will vary depending on your document: Graphics Mode TrueType™ mode Use Printer TrueType™ Fonts
RESOLUTION REDUCED TO ENABLE PRINTING (The printer has printed the document at a reduced resolution)	■ Reduce the complexity of your document before you print to prevent automatic reduction in the resolution. ■ Expand the printer memory by adding a commercially available DIMM. See *Installing additional memory* on page 4-2.

Paper handling

First, make sure that you are using paper that meets Brother recommended paper specifications. See *What kind of paper can I use?* on page 1-5.

Problem	Recommendation
The printer does not feed paper.	■ If there is paper in the paper tray, make sure it is straight. If the paper is curled, you should straighten it before printing. Sometimes it is helpful to remove the paper, turn the stack over and put it back in the paper tray. ■ Reduce the amount of paper in the paper tray, and then try again. ■ Check that manual feed mode is not selected in the printer driver.
The printer does not feed paper from the manual feed slot.	■ Re-insert the paper firmly, one sheet at a time. ■ Make sure that manual feed mode is selected in the printer driver.
The printer will not feed envelopes.	■ The printer can feed envelopes from the manual feed tray or multi-purpose tray. Your application software must be set up correctly to print on the envelope size you are using. This is usually done in the page setup or document setup menu of your software. Please see your software application manual.
A paper jam has occurred.	■ Clear the jammed paper. See *Paper jams and how to clear them* on page 6-6 or the paper jam instructional video on the CD-ROM.
The printer does not print into the face-down output tray.	■ Close the face-up output tray.
The printer does not print on the specified paper. (For HL-5140, HL-5150D and HL-5170DN with optional lower tray unit)	■ Make sure that the appropriate printer driver is selected.

Paper jams and how to clear them

When a paper jam occurs, the printer indicates it by lighting the control panel LEDs as shown below.

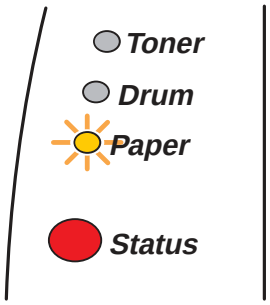

Figure 6-1

After you have just used the printer, some parts inside the printer are extremely hot. When you open the front cover or face-up output tray of the printer, never touch the shaded parts shown in Figure 6-2.

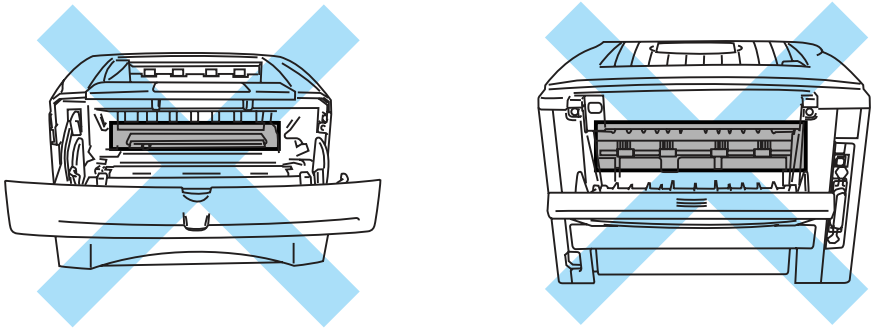

Figure 6-2

Clear the jammed paper as follows.

If the jammed paper is removed completely by using the information in the following steps, you can install the paper tray first, and then close the front cover and the printer will resume printing automatically.

If the printer does not start printing automatically, press the **Go** button. If the printer still does not start printing, please check that all the remaining jammed paper has been removed from the printer. Then try printing again.

- If a paper jam occurs when using the optional lower tray unit, check for correct installation of the upper paper tray.
- Always remove all paper from the paper tray and straighten the stack when you add new paper. This helps prevent multiple sheets of paper from feeding through the printer at one time and reduces paper jams.

1 Pull the paper tray completely out of the printer.

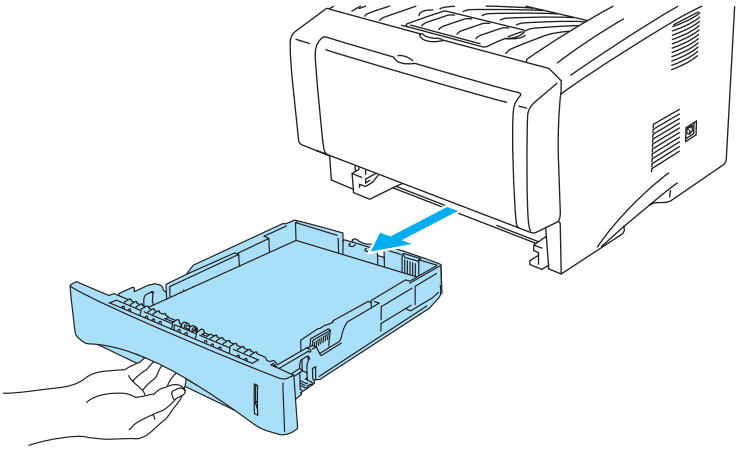

Figure 6-3

2 Pull the jammed paper up and out of the printer.

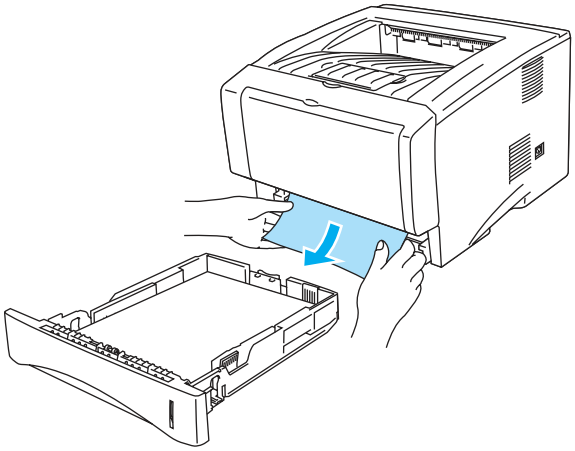

Figure 6-4

3 Press the cover release button and then open the front cover.

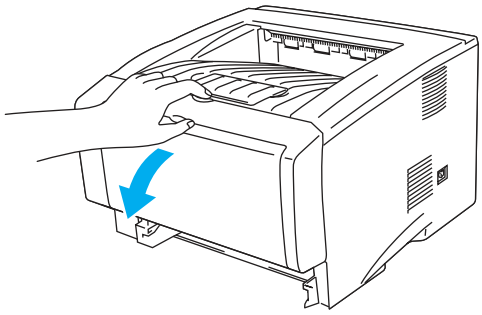

Figure 6-5

4 Pull out the drum unit assembly. Pull the jammed paper up and out of the printer. If you cannot remove the drum unit assembly easily at this time, do not use extra force. Instead, pull the edge of the jammed paper from the paper tray. If the jammed paper can not be pulled out easily, turn the jam dial towards you as you gently pull the paper out.

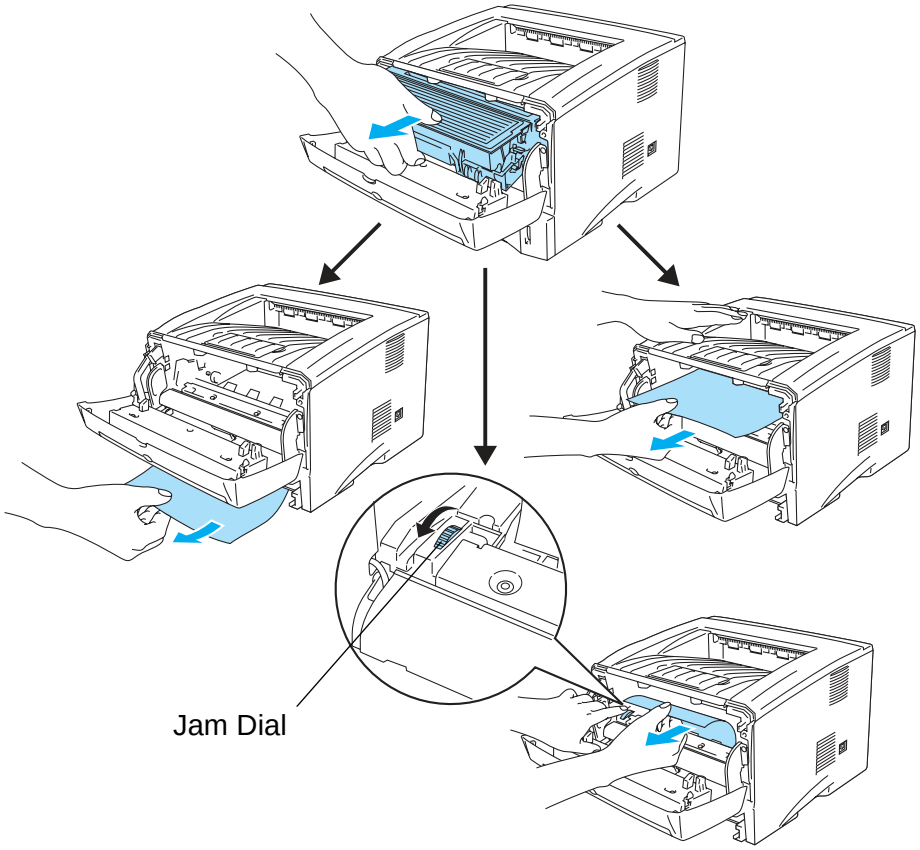

Figure 6-6

Caution

To prevent damage to the printer caused by static electricity, do not touch the electrodes shown in Figure 6-7.

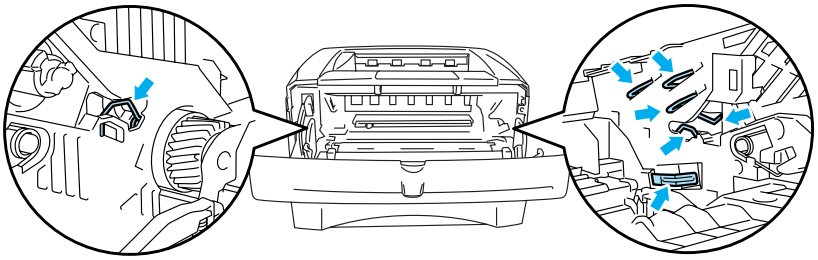

Figure 6-7

5 Open the face-up output tray. Pull the jammed paper out of the fuser unit. If the paper jam can be cleared, go to Step 7.

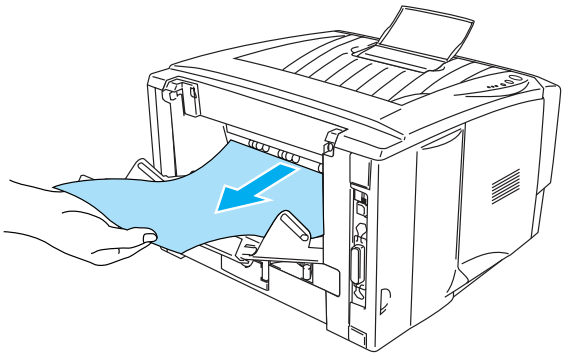

Figure 6-8

If you have to pull the paper toward the back of the printer, the fuser may get dirty with toner powder and it may scatter on the next few printouts. Print a few copies of the test page until the scattering of toner stops.

Caution

After you have just used the printer, some internal parts of the printer are extremely hot! Wait for the printer to cool down before you touch the internal parts of the printer.

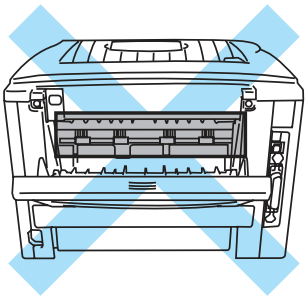

Figure 6-9

6 Open the jam clear cover. Pull the jammed paper out of the fuser unit.

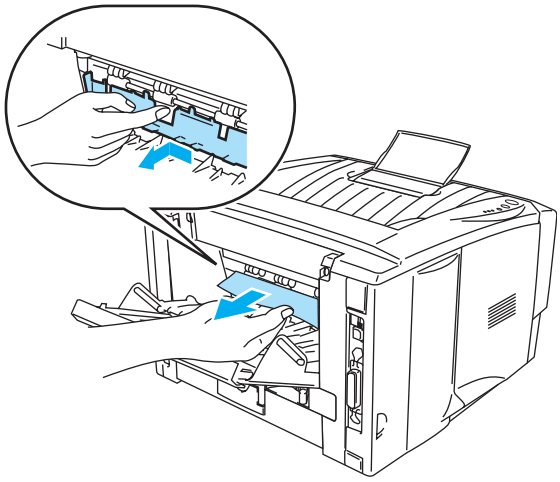

Figure 6-10

7 Close the jam clear cover. Close the face-up output tray. If the paper jam still cannot be cleared, for HL-5130 and HL-5140 users go to Step 10, and for all other users go to the next step.

8 Pull the Duplex Tray completly out of the printer.

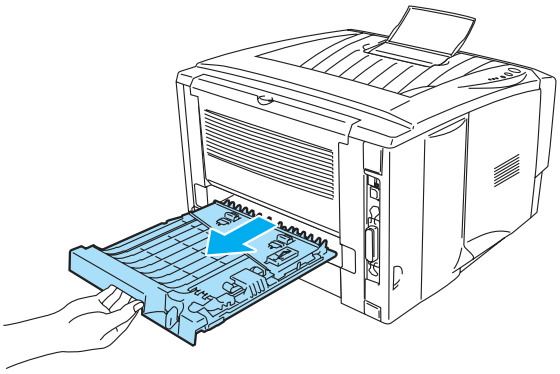

Figure 6-11

9 Pull the jammed paper out of the printer or the Duplex tray.
Put the Duplex tray back into the printer.

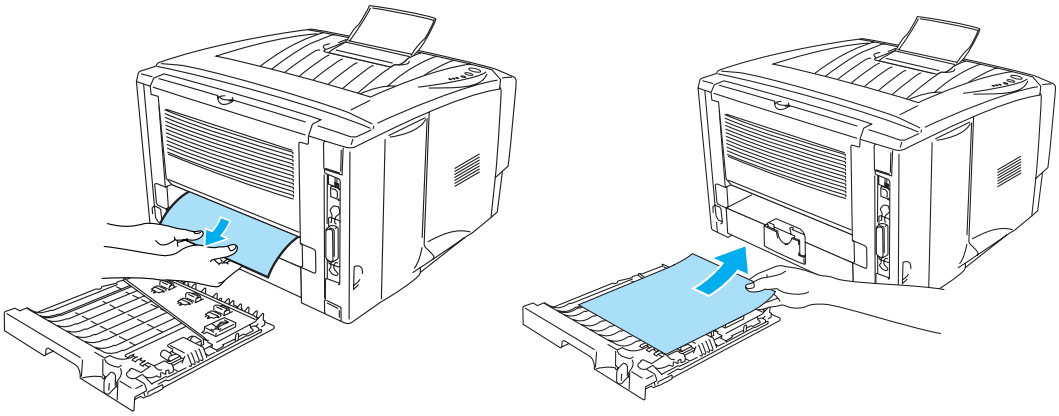

Figure 6-12

10 Push the lock lever down and take the toner cartridge out of the drum unit assembly. Take out the jammed paper if there is any inside the drum unit.
Put the toner cartridge into the drum unit until you hear it lock into place. If you put it in properly, the lock lever will lift automatically.

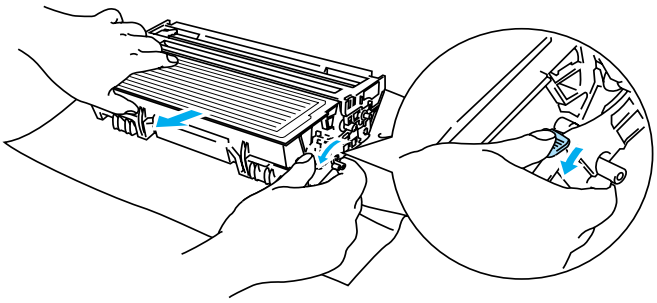

Figure 6-13

11 Put the drum unit assembly back in the printer.

12 Put the paper tray in the printer.

13 Close the front cover.

Other problems

Problem	Recommendation
The printer cannot print. **There was an error writing to LPT1: (or BRUSB) for the printer** error message occurs on your PC.	■ Check that the printer cable is not damaged or broken. ■ If you have an interface-switching device, make sure the correct printer is selected.

For Macintosh® with USB

Problem	Recommendation
HL-5130 (or **HL-5140**, **HL-5150D** and **HL-5170DN**) does not appear in **Chooser** (Mac OS® 8.6 to 9.2) or **Print Center** (Mac OS® X 10.1 / 10.2).	■ Check that the printer is turned on. ■ Check that the USB interface cable is connected correctly. ■ Check the printer driver is installed correctly.
Unable to print from application software.	■ Make sure that the supplied Macintosh® printer driver is installed in the **Hard Disk** and that it is selected with **Chooser** (Mac OS® 8.6 to 9.2) or **Print Center** (Mac OS® X 10.1 / 10.2).

Improving the print quality

If you have a print quality problem, print a test page first (see *page 3-8*). If the printout looks good, the problem is probably not the printer. Check the interface cable or try the printer on another PC.

This section provides information on the following topics:

Examples of poor print quality	Recommendation
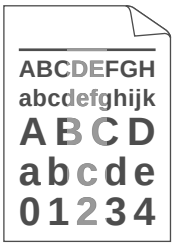 **Faint**	■ Check the printer's environment. Conditions such as humidity, high temperatures, and so on may cause this print fault. See *Positioning the printer* on page 1-4. ■ If the whole page is too light, **Toner Save** mode may be on. Turn off **Toner Save** mode in the printer Properties tab of the driver. ■ Try installing a new toner cartridge. See *Replacing the toner cartridge* on page 5-3. ■ Try installing a new drum unit. See *Replacing the drum unit* on page 5-9.

Examples of poor print quality	Recommendation
 Gray background	■ Make sure that you use paper that meets the recommended specifications. See *What kind of paper can I use?* in Chapter 1. ■ Check the printer's environment - high temperatures and high humidity can increase the amount of background shading. See *Positioning the printer* on page 1-4. ■ Use a new toner cartridge. See *Replacing the toner cartridge* in Chapter 5. ■ Use a new drum unit. See *Replacing the drum unit* on page 5-9.
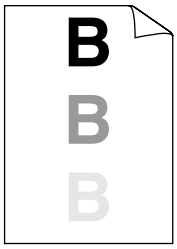 **Ghost**	■ Make sure you use paper that meets our specifications. Rough-surfaced paper or thick print media may cause this problem. See *What kind of paper can I use?* on page 1-5. ■ Make sure that you choose the appropriate media type in the printer driver. See *What kind of paper can I use?* on page 1-5. ■ Try using a new drum unit. See *Replacing the drum unit* on page 5-9.
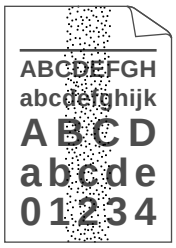 **Toner specks**	■ Make sure that you use paper that meets our specifications. Rough-surfaced paper may cause the problem. See *What kind of paper can I use?* on page 1-5. ■ The drum unit may be damaged. Put in a new drum unit. See *Replacing the drum unit* on page 5-9.
 Hollow print	■ Make sure that you use paper that meets our specifications. See *What kind of paper can I use?* in Chapter 1. ■ Choose **Thick paper** mode in the printer driver, or use thinner paper than you are currently using. ■ Check the printer's environment because conditions such as high humidity can cause hollow print. See *Positioning the printer* on page 1-4.
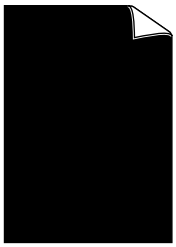 **All black**	■ You may clear the problem by cleaning the primary corona wire inside the drum unit by sliding the blue tab. Make sure you return the blue tab to the home position (▲). See *Cleaning* on page 5-12. ■ The drum unit may be damaged. Put in a new drum unit. See *Replacing the drum unit* on page 5-9.

Examples of poor print quality	Recommendation
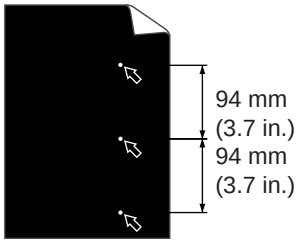 **White Spots on black text and graphics at 94 mm (3.7 in.) intervals** 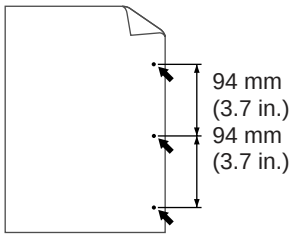 **Black Spots at 94 mm (3.7 in.) intervals**	■ If the problem is not solved after printing a few pages, the drum unit may have glue from label stock on the OPC drum surface. Clean the drum unit as follows: ***1*** Position the print sample in front of the drum unit, and find the exact position of the poor print. 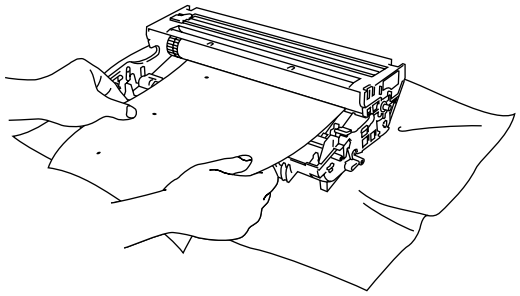 ***2*** Turn the drum unit gear by hand while looking at the surface of the OPC drum. 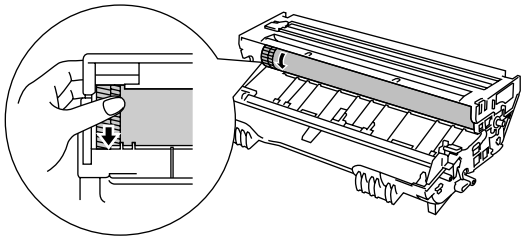 ***3*** When you have located the mark on the drum that matches the print sample, wipe the surface of the OPC drum with a cotton swab until the dust or paper powder on the surface comes off. 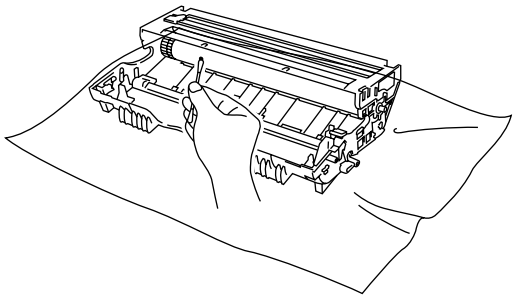 **Caution** Do not try to clean the surface of the photosensitive drum with a sharp object. ■ The drum unit may be damaged. Put in a new drum unit. See *Replacing the drum unit* on page 5-9.

Examples of poor print quality	Recommendation
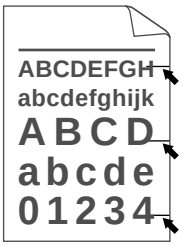 **Black toner marks across the page**	■ The drum unit may be damaged. Put in a new drum unit. See *Replacing the drum unit* on page 5-9. ■ Make sure that you use paper that meets our specifications. See *What kind of paper can I use?* on page 1-5. ■If you use label sheets for laser printers, the glue from the sheets may sometimes stick to the OPC drum surface. Clean the drum unit. See *Cleaning* on page 5-12. ■Do not use paper that has clips or staples because they will scratch the surface of the drum. ■If the unpacked drum unit is in direct sunlight or room light, the unit may be damaged.
 White lines across the page	■ Make sure that you use paper that meets our specifications. A rough surfaced paper or thick print media can cause the problem. ■ Make sure that you select the appropriate media type in the printer driver. ■ The problem may disappear by itself. Try printing multiple pages to clear this problem, especially if the printer has not been used for a long time. ■ The drum unit may be damaged. Put in a new drum unit. See *Replacing the drum unit* on page 5-9.
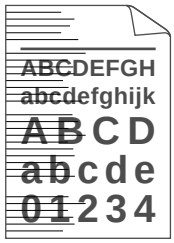 **Lines across the page**	■ Clean the inside of the printer and the primary corona wire in the drum unit. See *Cleaning* on page 5-12. ■ The drum unit may be damaged. Put in a new drum unit. See *Replacing the drum unit* on page 5-9.
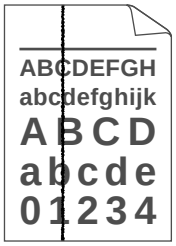 **Black lines down the page** Printed pages have toner stains down the page.	■ Clean the primary corona wire of the drum unit. See *Cleaning* in Chapter 5. ■ Make sure the primary corona wire cleaner is at the home position (▲). ■ The drum unit may be damaged. Install a new drum unit. See *Replacing the drum unit* on page 5-9. ■ The toner cartridge may be damaged. Put in a new toner cartridge. See *Replacing the toner cartridge* on page 5-3. Make sure that a torn piece of paper is not inside the printer covering the scanner window. ■ The fixing unit may be smudged. Call Brother Customer Service.

Examples of poor print quality	Recommendation
 White lines down the page	■ You may clear the problem by wiping the scanner window with a soft cloth. See *Cleaning* on page 5-12. ■ The toner cartridge may be damaged. Put in a new toner cartridge. See *Replacing the toner cartridge* on page 5-3.
 Page skewed	■ Make sure the paper or other print media is loaded properly in the paper tray and that the guides are not too tight or too loose against the paper stack. ■ Set the paper guides correctly. See *Printing on plain paper from the paper tray* on page 1-8. ■ If you are using the manual feed tray (or the multi-purpose tray), See *Printing on plain paper from the manual feed tray (For HL-5130 and HL-5140)* on page 1-12, or see *Printing on plain paper from the multi-purpose tray (MP tray) (For HL-5150D and HL-5170DN)* on page 1-14. ■ The paper tray may be too full. See *Printing on plain paper from the paper tray* on page 1-8. ■ Check the paper type and quality. See *What kind of paper can I use?* on page 1-5.
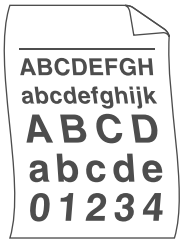 **Curl or wave**	■ Check the paper type and quality. High temperatures and high humidity will cause paper to curl. See *What kind of paper can I use?* on page 1-5. ■ If you don't use the printer very often, the paper may have been in the paper tray too long. Turn over the stack of paper in the paper tray. Also, try fanning the paper stack and then rotating the paper 180° in the paper tray. ■ Try printing using the straight-through output path. See *Printing on plain paper from the manual feed tray (For HL-5130 and HL-5140)* on page 1-12, or see *Printing on plain paper from the multi-purpose tray (MP tray) (For HL-5150D and HL-5170DN)* on page 1-14.
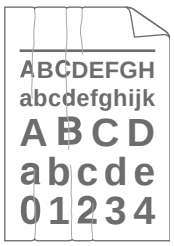 **Wrinkles or creases**	■ Make sure that paper is loaded properly. See *Printing on plain paper from the paper tray* on page 1-8. ■ Check the paper type and quality. See *What kind of paper can I use?* on page 1-5. ■ Try printing using the straight-through output path. See *Printing on plain paper from the manual feed tray (For HL-5130 and HL-5140)* on page 1-12, or see *Printing on plain paper from the multi-purpose tray (MP tray) (For HL-5150D and HL-5170DN)* on page 1-14. ■ Turn over the stack of paper in the tray or try rotating the paper 180° in the input tray.

Examples of poor print quality	Recommendation
 Envelope creases	■ Open the face-up (back) output tray and push down the blue tabs at the left and right hand sides (as shown in the figure below). When you have finished printing your envelopes, close the face-up output tray to reset the two blue tabs back to their original position. See *page 1-31*. 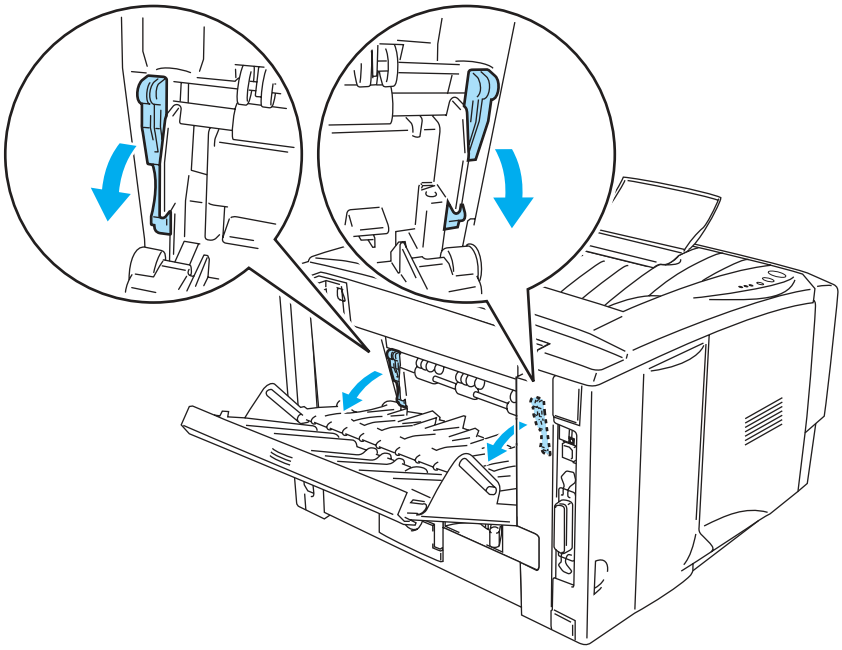

Solving print problems

Problem	Recommendation
The printer prints unexpectedly or it prints garbage data.	■ Make sure the printer cable is not too long. We recommend you use a parallel or USB cable that is less than 2 meters (6 1/2 feet) in length. ■ Make sure that the printer cable is not damaged or broken. ■ If you are using an interface-switching device, remove it. Connect your computer directly to your printer, and then try again. ■ Check that you have chosen the appropriate printer driver with 'Set as Default'. ■ Make sure that the printer is not connected to the same port that is also connected to a storage device or scanner. Take away all other devices and connect the port only to the printer. ■ Turn off Printer Status Monitor in the **Device Options** tab in the printer driver.
The printer cannot print full pages of a document. An error message `PRINT OVERRUN` is printed out.	■ Press the **Go** button to print the data left in the printer. Press the **Job Cancel** button if you want to delete the data left in the printer. ■ If this does not clear the error, reduce the complexity of your document or reduce the print resolution. ■ Expand the printer memory by adding a DIMM. See *Installing additional memory* on page 4-2. Set page protection to ON by using the supplied Windows® driver. ■ Change the following settings in the supplied Windows® driver, and then try again. The best combination of the settings below will vary depending on your document: Graphics Mode TrueType™ mode Use printer TrueType™ fonts
The printer cannot print full pages of a document. An error message `MEMORY FULL` is printed out.	■ Press the **Go** button to print the data left in the printer. Press the **Job Cancel** button if you want to delete the data left in the printer. ■ Reduce the print resolution or reduce the complexity of your document. ■ Expand the printer memory by adding a DIMM. See *Installing additional memory* on page 4-2.
My headers or footers appear when I view my document on the screen but they do not show up when I print it.	■ Most laser printers have a restricted area that cannot be printed on. This unprintable area is usually the first two lines and the last two lines of a page (leaving 62 printable lines). Adjust the top and bottom margins of your document to allow for this.

A Appendix

Printer specifications

Engine

Model		HL-5130	HL-5140 / HL-5150D / HL-5170DN
Technology		Electrophotographic	
Print speed		Up to 18 ppm (Letter size) Up to 17 ppm (A4 size)	Up to 21 ppm (Letter size) Up to 20 ppm (A4 size)
First print time		Less than 10 sec*1	
Resolution	Windows® 95/98/Me, Windows NT® 4.0, Windows® 2000 and Windows® XP	HQ1200 600 dpi 300 dpi	
	DOS	N/A	600 dpi
	Mac OS®	HQ1200 600 dpi 300 dpi	

*1 From standard paper tray

Controller

Model		HL-5130	HL-5140	HL-5150D	HL-5170DN
Processor		Fujitsu SPARClite 133MHz			
Memory	Standard	8 MB	16 MB		32 MB
	Option	N/A	1 DIMM slot; expandable up to 144 MB		1 DIMM slot; expandable up to 160 MB
Interface	Standard	IEEE 1284 Parallel, Hi-Speed USB 2.0*2			IEEE 1284 Parallel, Hi-Speed USB 2.0*2, 10/100 BASE-TX
	Option	10/100BASE-TX (NC-2100p)			
Network Connectivity	Protocol for standard 10/100BASE-TX	N/A			TCP/IP, AppleTalk, IPX/SPX, DLC/LLC
	Protocol for optional 10/100BASE-TX (NC-2100p)	TCP/IP, NetBEUI, AppleTalk*3			
	Management tool	N/A			BRAdmin Professional*4 Web Based Management*5
Emulation		GDI	PCL6	PCL6, BR-Script 3, Epson FX-850, IBM ProPrinter XL	
Resident fonts	PCL	N/A	49 scalable fonts, 12 bitmap fonts, 11 bar codes*6	66 scalable fonts, 12 bitmap fonts, 11 bar codes*6	
	PostScript®3 language emulation	N/A		66 fonts	

*2 Hi-Speed USB 2.0 (480 Mbps) is up to 40 times faster and compatible with original USB (12 Mbps).

*3 HL-5150D and HL-5170DN only.

*4 Brother original Windows® management utility

*5 Use a standard web browser to manage the device.

*6 Code39, Interleaved 2 of 5, EAN-8, EAN-13, UPC-A, UPC-E, EAN-128, Codabar, FIM (US-PostNet), ISBN, Code128

Software

Model	HL-5130	HL-5140	HL-5150D	HL-5170DN
Printer driver	PCL Driver for Windows® 95/98/Me, Windows NT® 4.0, Windows® 2000 and Windows® XP			
	Brother Laser Driver for Mac OS® 8.6 to 9.2 and Mac OS® X 10.1 to 10.2			
	N/A		BR-Script® 3: PostScript Printer Description (PPD) file for Windows® 95/98/Me, Windows NT® 4.0, Windows® 2000, Windows® XP, Mac OS® 8.6 to 9.2 and Mac OS® X 10.1 to 10.2	
Utilities	Interactive Help*7			Interactive Help*7 Driver Deployment Wizard*8

Control panel

Model	HL-5130	HL-5140	HL-5150D	HL-5170DN
LED	4 LEDs			
Button	2 buttons			

Paper handling

Model		HL-5130	HL-5140	HL-5150D	HL-5170DN
Paper Input*9	Multi-purpose tray	N/A		50 Sheets	
	Manual feed tray	1 Sheet		N/A	
	Paper tray (Standard)	250 Sheets			
	Lower tray (Option)	N/A	250 Sheets		
Paper Output*9	Face-down	150 Sheets			
	Face-up	1 Sheet		25 Sheets	
Duplex		Manual Duplex		Automatic Duplex	

*7 Instructional animations for problem solving

*8 The Driver Deployment Wizard automates the installation of a printer in a peer-to-peer network.

*9 Calculated with 80 g/m^2 (21 lb) paper

Media specifications

Model		HL-5130	HL-5140	HL-5150D	HL-5170DN
Media types	Multi-purpose tray	N/A		Plain paper, Bond paper, Recycled paper, Envelope, Labels, and Transparencies*10	
	Manual feed tray	Plain paper, Bond paper, Recycled paper, Envelope, Labels, and Transparencies		N/A	
	Paper tray (Standard)	Plain paper, Bond paper, Recycled paper, and Transparencies*10			
	Lower tray (Option)	N/A	Plain paper and Recycled paper		
Media weights	Multi-purpose tray	N/A		60 to 161 g/m^2 (16 to 43 lb)	
	Manual feed tray	60 to 161 g/m^2 (16 to 43 lb)		N/A	
	Paper tray (Standard)	60 to 105 g/m^2 (16 to 28 lb)			
	Lower tray (Option)	N/A	60 to 105 g/m^2 (16 to 28 lb)		
Media sizes	Multi-purpose tray	N/A		Width: 69.9 to 215.9mm (2.75 to 8.5 in.) Length: 116 to 406.4 mm (4.57 to 16 in.)	
	Manual feed tray	Width: 69.9 to 215.9mm (2.75 to 8.5 in.) Length: 116 to 406.4 mm (4.57 to 16 in.)		N/A	
	Paper tray (Standard)	A4, Letter, Legal, B5 (ISO), Executive, A5, A6, B6			
	Lower tray (Option)	N/A	A4, Letter, Legal, B5 (ISO), Executive, A5, B6		

*10 Up to 10 sheets

Supplies

Model		HL-5130	HL-5140	HL-5150D	HL-5170DN
Toner	Standard cartridge	3,500 pages A4/Letter pages @5% coverage			
	High yield cartridge	6,700 pages A4/Letter pages @5% coverage			
Drum		20,000 A4/Letter pages (1 page / job)			

Dimensions / Weights

Model	HL-5130	HL-5140	HL-5150D	HL-5170DN
Dimensions (W × D × H)	382 × 383 × 252 mm (15.0 × 15.1 × 9.9 in.)		382 × 401 × 252 mm (15.0 × 15.8 × 9.9 in.)	
Weights	Approx.10.5 kg (23.1 lb) including the drum unit and toner cartridge		Approx. 11.9 kg (26.2 lb) including the drum unit and toner cartridge	

Other

Model			HL-5130	HL-5140	HL-5150D	HL-5170DN
Power consumption		Printing	Less than 460 W at 25 °C (77 °F)			
		Standby	Less than 75 W at 25 °C (77 °F)			
		Sleep	Less than 5 W			Less than 6 W
Noise level	Sound Pressure	Printing	50 dB			
		Standby	Less than 30 dB			
	Sound Power	Printing	6.4B(A)			
		Standby	4.3B(A)			
Ecology	Power save		Yes			
	Toner save		Yes			

System Requiements

Computer Platform & Operating System Version		Processor Speed	Minimum RAM	Recommended RAM	Available Hard Disk Space
Windows®	95*, 98, 98SE	486/66 MHz	8 MB	16 MB	40 MB
	NT® Workstation 4.0*	Pentium 75 MHz	16 MB	32 MB	50 MB
	2000 Professional	Pentium 133 MHz	64 MB	128 MB	50 MB
	Me	Pentium 150 MHz	32 MB	64 MB	50 MB
	XP	Pentium 300 MHz	128 MB	128 MB	50 MB
Apple® Macintosh®**	OS® 8.6 - 9.2	All base models meet minimum requirements	32 MB	64 MB	50 MB
	OS® X 10.1 - 10.2 or greater		128 MB	160 MB	

* USB is not supported under Windows® 95 or Windows NT®4.0.
** Power Macintosh with an Apple original pre-installed USB port.

Important information for choosing your paper

This section provides information to help you choose paper to use with this printer.

Before you purchase a large quantity of paper

Make sure the paper is suitable for the printer.

Paper for plain paper copies

Paper is divided by usage, such as paper for printing and paper for copying. The usage is usually specified on the paper's package. Check the package to see whether it is suitable for laser printers. Use paper that is suitable for laser printers.

Basis weight

The basis weight of the paper in general use varies in different countries. We recommend that you use paper that weighs 75 g/m^2 to 90 g/m^2 (20 to 24 lb), although this printer is able to cope with thinner or thicker paper than these weights.

Unit	Europe	USA
g/m^2	80 to 90	75 to 90
lb		20 to 24

Long grain and short grain

The pulp fiber of the paper is aligned during paper manufacturing. What we call long grain paper is paper where the fiber is parallel to the paper carriage direction of the paper.

Paper can be classified into two types, long grain and short grain. Long grain paper's fiber direction is parallel to the carriage direction of the paper in the printer. Short grain paper's fiber direction is vertical to the carriage direction of the paper in the printer. Though most plain paper for copying is long grain, some is short grain. We recommend that you use long grain paper for this printer. Short grain paper is too weak for the paper carriage of the printer.

Acid paper and neutralized paper

Paper can be classified as either acid paper or neutralized paper.

Though modern paper manufacture methods started with acid paper, recently neutralized paper is taking the place of acid paper because of environment or preservation issues.

However, many forms of acid paper can be found in recycled paper. We recommend that you use neutralized paper for this printer.

You can use an acid paper check pen to distinguish acid paper from neutral paper.

Print surface

The characteristics may differ a little between the face side and reverse side of a sheet of paper.

Usually, the opening side of the ream of paper package is the print side. Follow any indication of the print side on the paper package. Typically, the print side is indicated by an arrow.

Moisture content

Moisture content is the amount of water left in the paper after manufacture. It is one of the important characteristics of the paper. This can change greatly depending on the storage environment, although usually paper contains about 5% water by weight. Because paper often absorbs water, the amount of water can sometimes be about 10% in a high humidity environment. When the amount of water increases, the characteristic of the paper changes greatly. The fixing of the toner may become worse. For storage of the paper and during use, we recommend that the humidity of the surrounding environment is between 50% and 60%.

Rough estimate of basis weight

g/m^2	lb	
	Bond	**Index**
60	16	
64	17	
75	20	
90	24	
105	28	
120	32	
135	36	
161	43	90
200	53	110

Paper size

Letter		8.5 × 11 in.
Legal		8.5 × 14 in.
Executive		7.25 × 10.5 in.
A4	210 × 297 mm	
A5	148 × 210 mm	
A6	105 × 148 mm	
Envelope Monarch		3.875 × 7.5 in.
Envelope #9		3.875 × 8.9 in.
Envelope #10		4.12 × 9.5 in.
Envelope #11		4.5 × 10.375 in.
Envelope DL	110 × 220 mm	
Envelope C5	162 × 229 mm	
Envelope C6	114 × 162 mm	
Envelope B5 (ISO)	176 × 250 mm	
Envelope B6	125 × 176 mm	
Folio		8.5 × 13 in.

B Appendix (For Europe and Other Countries)

Brother Numbers

IMPORTANT: For technical and operational help, you must call the country where you bought the printer. Calls must be made *from within* that country.

Register your product

By registering your Brother product, you will be recorded as the original owner of the product.

Your registration with Brother:

- may serve as a confirmation of the purchase date of your product should you lose your receipt;
- may support an insurance claim by you in the event of product loss covered by insurance; and,
- will help us to notify you of enhancements to your product and special offers.

Please complete the Brother Warranty Registration or, for your convenience and most efficient way to register your new product, register on-line at

http://www.brother.com/registration/

Frequently asked questions (FAQs)

The Brother Solutions Center is our one-stop resource for all your Printer needs. You can download the latest drivers, software and utilities, read FAQs and troubleshooting tips to learn how to get the most from your Brother product.

http://solutions.brother.com

You can check here for the Brother driver updates.

Customer Service

Visit http://www.brother.com for contact information on your local Brother office.

Service center locations

For service centres in Europe, contact your local Brother Office. Address and telephone contact information for European offices can be found at http://www.brother.com and select your country.

Internet Addresses
Brother Global Web Site: http://www.brother.com
For Frequently Asked Questions (FAQs), Product Support and Technical Questions, and Driver Updates and Utilities: http://solutions.brother.com

Important information: Regulations

Radio interference (220 to 240 volt model only)

This printer follows EN55022 (CISPR Publication 22)/Class B.

Before you use this product, make sure that you use the following interface cables.

1. A shielded parallel interface cable with twisted-pair conductors and that it is marked "IEEE 1284 compliant".
2. A USB cable.

The cable must not be more than 2 meters long.

International ENERGY STAR® Compliance Statement

The purpose of the International ENERGY STAR® Program is to promote the development and popularization of energy-efficient office equipment.

As an ENERGY STAR® Partner, Brother Industries, Ltd. has determined that this product meets the ENERGY STAR® guidelines for energy efficiency.

IEC 60825 specification (220 to 240 volt model only)

This printer is a Class 1 laser product as defined in IEC 60825 specifications. The label shown below is attached in countries where it is needed.

This printer has a Class 3B laser diode which produces invisible laser radiation in the scanner unit. You should not open the scanner unit under any circumstances.

Caution: Use of controls or adjustments or performance of procedures other than those specified in this User's Guide may result in hazardous radiation exposure.

For Finland and Sweden
LUOKAN 1 LASERLAITE
KLASS 1 LASER APPARAT

Varoitus! Laitteen käyttäminen muulla kuin tässä käyttöohjeessa mainitulla tavalla saattaa altistaa käyttäjän turvallisuusluokan 1 ylittävälle näkymättömälle lasersäteilylle.

Varning *Om apparaten används på annat sätt än i denna Bruksanvisning specificerats, kan användaren utsättas för osynlig laserstrålning, som överskrider gränsen för laserklass 1.*

Internal laser radiation

Maximum radiation power:	5 mW
Wave length:	760 - 810 nm
Laser class:	Class IIIb (Accordance with 21 CFR Part 1040.10)
	Class 3B (Accordance with IEC 60825)

IMPORTANT - For Your Safety

To ensure safe operation the supplied three-pin plug must be inserted only into a standard three-pin power outlet that is properly grounded through the standard electrical wiring.

Extension cords used with this printer must be three-pin plug type and correctly wired to provide proper grounding. Incorrectly wired extension cords may cause personal injury and equipment damage.

The fact that the equipment operates satisfactorily does not imply that the power is grounded and that the installation is completely safe. For your safety, if in any doubt about the effective grounding of the power, call a qualified electrician.

Disconnect device

You must install this printer near a power outlet that is easily accessible. In case of an emergency, you must disconnect the power cord from the power outlet to shut off the power completely.

Caution for LAN connection

Connect this product to a LAN connection that is not subjected to overvoltages.

IT power system (For Norway only)

This product is also designed for an IT power system with phase-to-phase voltage 230V.

Geräuschemission / Acoustic noise emission (for Germany only)

Lpa < 70 dB (A) DIN 45635-19-01-KL2

Wiring information (for UK)

Important

If you need to replace the plug fuse, fit a fuse that is approved by ASTA to BS1362 with the same rating as the original fuse.

Always replace the fuse cover. Never use a plug that does not have a cover.

Warning - This printer must be earthed.

The wires in the mains lead are coloured in line with the following code:

Green and Yellow:	**Earth**
Blue:	**Neutral**
Brown:	**Live**

If in any doubt, call a qualified electrician.

“EC” Declaration of Conformity

Manufacturer
Brother Industries Ltd.,
15-1, Naeshiro-cho, Mizuho-ku,
Nagoya 467-8561, Japan

Plant
Brother Technology (Shenzhen) Ltd.
NO6 Gold Garden Ind. Nanling Buji,
Longgang, Shenzhen, China

Herewith declare that:

Product description	: Laser Printer
Product Name	: HL-5130, HL-5140, HL-5150D, HL-5170DN
Model Number	: HL-51

are in conformity with provisions of the Directives applied : Low Voltage Directive 73/23/EEC (as amended by 93/68/EEC) and the Electromagnetic Compatibility Directive 89/336/EEC (as amended by 91/263/EEC and 92/31/EEC and 93/68/EEC).

Standards applied:

Harmonized	Safety	: EN60950:2000
	EMC	: EN55022:1998 Class B EN55024:1998 EN61000-3-2:1995 + A14:2000 EN61000-3-3:1995

Year in which CE marking was first affixed : 2003

Issued by	: Brother Industries, Ltd.
Date	: 1 August, 2003
Place	: Nagoya, Japan
Signature	: Takashi Maeda

Takashi Maeda
Manager
Quality Management Group
Quality Management Dept.
Information & Document Company

C Appendix (For USA and Canada)

Brother Numbers

IMPORTANT: For technical and operational help, you must call the country where you bought the printer. Calls must be made *from within* that country.

Register your product

By registering your product with Brother International Corporation, you will be recorded as the original owner of the product.

Your registration with Brother:

- may serve as a confirmation of the purchase date of your product should you lose your receipt;
- may support an insurance claim by you in the event of product loss covered by insurance; and,
- will help us notify you of enhancements to your product and special offers.

Please complete the Brother Warranty Registration or, for your convenience and most efficient way to register your new product, register on-line at

http://www.brother.com/registration/

Frequently asked questions (FAQs)

The Brother Solutions Center is our one-stop resource for all your Printer needs. You can download the latest software and utilities, read FAQs and troubleshooting tips to learn how to get the most from your Brother product.

http://solutions.brother.com

You can check here for the Brother driver updates.

Customer Service

In USA: 1-800-276-7746

In Canada: 1-877-BROTHER

If you have comments or suggestions, please write us at:

In USA: Printer Customer Support
Brother International Corporation
15 Musick
Irvine, CA 92618

In Canada: Brother International Corporation (Canada), Ltd.
- Marketing Dept.
1, rue Hotel de Ville
Dollard-des-Ormeaux, PQ, Canada H9B 3H6

Service center locator (USA only)

For the location of a Brother authorized service center, call 1-800-284-4357.

Service center locations (Canada only)

For the location of a Brother authorized service center, call 1-877-BROTHER

Brother fax back system (USA only)

Brother has installed an easy to use fax back system so you can get instant answers to common technical questions and product information. This is available 24 hours a day, 7 days a week. You can use the system to send the information to any fax machine.

Call the number below and follow the recorded instructions to receive a fax about how to use the system and an index of fax back subjects.

In USA only:1-800-521-2846

Internet Addresses

Brother Global Web Site: http://www.brother.com

For Frequently Asked Questions (FAQs), Product Support and Technical Questions, and Driver Updates and Utilities: http://solutions.brother.com

(In USA Only) For Brother Accessories & Supplies: http://www.brothermall.com

Important information: Regulations

Federal Communications Commission (FCC) Declaration of Conformity (For USA)

Responsible Party: Brother International Corporation
100 Somerset Corporate Boulevard
P.O. Box 6911
Bridgewater, NJ 08807-0911
USA
Telephone: (908) 704-1700

declares, that the products

Product name: Laser Printer 5140, 5150D and HL-5170DN
Model number: HL-51
Product options: Lower Tray Unit LT-5000, DIMM

complies with Part 15 of the FCC Rules. Operation is subject to the following two conditions: (1) This device may not cause harmful interference, and (2) this device must accept any interference received, including interference that may cause undesired operation.

This equipment has been tested and found to comply with the limits for a Class B digital device, pursuant to Part 15 of the FCC Rules. These limits are designed to provide reasonable protection against harmful interference in a residential installation. This equipment generates, uses, and can radiate radio frequency energy and, if not installed and used in accordance with the instructions, may cause harmful interference to radio communications. However, there is no guarantee that interference will not occur in a particular installation. If this equipment does cause harmful interference to radio or television reception, which can be determined by turning the equipment off and on, the user is encouraged to try to correct the interference by one or more of the following measures:

- Reorient or relocate the receiving antenna.
- Increase the separation between the equipment and receiver.
- Connect the equipment into an outlet on a circuit different from that to which the receiver is connected.
- Consult the dealer or an experienced radio/TV technician for help.

Important

A shielded interface cable should be used in order to ensure compliance with the limits for a Class B digital device.

Changes or modifications not expressly approved by Brother Industries, Ltd. could void the user's authority to operate the equipment.

Industry Canada Compliance Statement (For Canada)

This Class B digital apparatus complies with Canadian ICES-003.

Cet appareil numérique de la classe B est conforme à la norme NMB-003 du Canada.

International ENERGY STAR® Compliance Statement

The purpose of the International ENERGY STAR® Program is to promote the development and popularization of energy-efficient office equipment.

As an ENERGY STAR® Partner, Brother Industries, Ltd. has determined that this product meets the ENERGY STAR® guidelines for energy efficiency.

Laser Notices

Laser Safety (100 to 120 volt model only)

This printer is certified as a Class I laser product under the U.S. Department of Health and Human Services (DHHS) Radiation Performance Standard according to the Radiation Control for Health and Safety Act of 1968. This means that the printer does not produce hazardous laser radiation.

Since radiation emitted inside the printer is completely confined within protective housings and external covers, the laser beam cannot escape from the machine during any phase of user operation.

FDA Regulations (100 to 120 volt model only)

U.S. Food and Drug Administration (FDA) has implemented regulations for laser products manufactured on and after August 2, 1976. Compliance is mandatory for products marketed in the United States. One of the following labels on the back of the printer indicates compliance with the FDA regulations and must be attached to laser products marketed in the United States.

MANUFACTURED:
Brother Industries, Ltd.,
15-1 Naeshiro-cho Mizuho-ku Nagoya, 467-8561 Japan
This product complies with FDA radiation performance standards, 21 CFR subchapter J.

MANUFACTURED:
Brother Technology (Shenzhen) Ltd.
NO6 Gold Garden Ind. Nanling Buji, Longgang, Shenzhen, CHINA
This product complies with FDA radiation performance standards, 21 CFR Subchapter J

Caution: Use of controls, adjustments or performance of procedures other than those specified in this User's Guide may result in hazardous radiation exposure.

IMPORTANT - For Your Safety

To ensure safe operation the supplied three-pin plug must be inserted only into a standard three-pin power outlet that is properly grounded through the standard electrical wiring.

Extension cords used with this printer must be three-pin plug type and correctly wired to provide proper grounding. Incorrectly wired extension cords may cause personal injury and equipment damage.

The fact that the equipment operates satisfactorily does not imply that the power is grounded and that the installation is completely safe. For your safety, if in any doubt about the effective grounding of the power, call a qualified electrician.

Disconnect device

You must install this printer near a power outlet that is easily accessible. In case of an emergency, you must disconnect the AC power cord from the AC power outlet to shut off the power completely.

Caution for LAN connection

Connect this product to a LAN connection that is not subjected to overvoltages.

INDEX

A

Accessories and supplies 4-1, 5-13, C-2
Accessories tab 2-9
Automatic duplex printing 1-47
Automatic emulation selection 2-21

B

BRAdmin Professional 2-20
Brother Solutions Center 2-1
BR-Script 2-1

C

Carton contents 1-1
Cleaning 5-12
Control panel 3-1, A-3
Control panel buttons 3-7
Corona wire 5-7

D

Device Options 2-5
Dimensions A-5
DIMM 4-1
Drum LED 5-8
Drum unit 5-8, 5-9, A-5
Drum unit and toner cartridge assembly 5-4
Duplex lever error 3-4
Duplex printing 1-43, 2-4
Duplex size error 3-4

E

Emulation A-2
Envelopes 1-24, 1-25, 1-29
Error messages 6-2, 6-3

F

Fixing unit 5-13
Fonts 3-10, A-2

I

indications 3-5
Interface A-2

L

LED 3-1
Lower tray unit (option) 4-4

M

Macintosh® 2-1, 2-17, 6-11
Maintenance (routine) 5-13
Manual duplex printing 1-43
Manual feed tray 1-2, 1-12, 1-17, 1-25, 1-36, 1-44
Media specifications A-4
Memory 4-2, A-2
Misfeed 3-4
Multi-purpose tray (MP tray)
.....1-2, 1-5, 1-14, 1-20, 1-45, 6-5, 6-15

N

NC-2100p 4-5
Network 2-20
Network connectivity A-2
No duplex tray 3-4
No paper 3-4

P

Paper 1-5, A-6
Paper handling 6-5, A-3
Paper jams 3-4, 6-6
Parallel cable 1-1
PCL printer driver 2-2
Pick up roller 5-13
Plain paper 1-6
Power supply 1-4
Print configuration 3-9
Print media 1-5
Print quality 2-3, 6-11
Print server 4-5
Print test page 3-8
Printable area 1-7
Printer driver 2-1, 2-11, A-3
Printer parts 1-2, 1-3
Printer settings 3-9
Processor A-2
PS printer driver 2-11

R

Register your printer B-1, C-1
Resolution A-1

S

Separator pad holder 5-13
Service call 3-5
Service centers (USA/Canada) C-2
Service centres (Europe and other countries) B-1
Software 2-20, A-3
Specifications A-1
Status Monitor 2-6

T

Thicker paper 1-17, 1-20
Toner A-5
Toner cartridge 5-2, 5-3
Toner empty 3-3, 5-3
Toner low 3-3, 5-2
Trademarks III

U

Utilities A-3

W

Watermark 2-4
Weights A-5