brother®

Brother Laser Printer

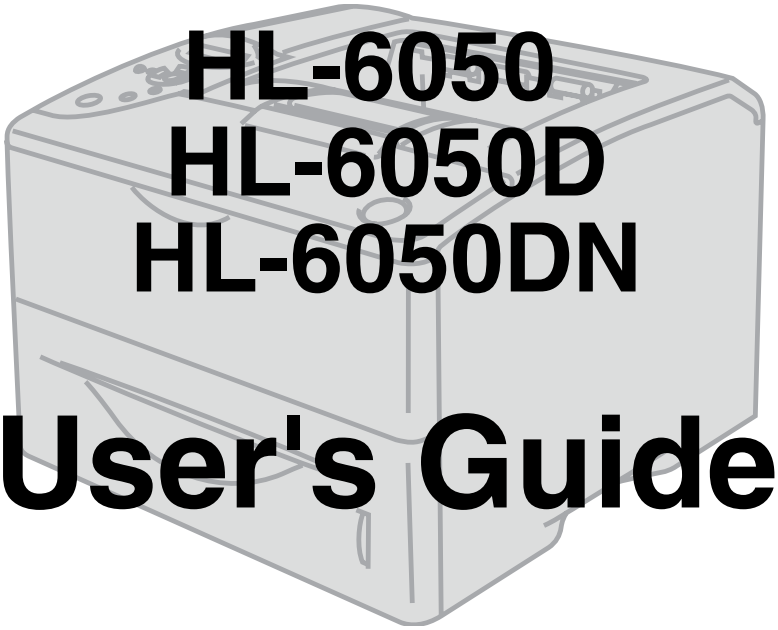

HL-6050
HL-6050D
HL-6050DN

User's Guide

For visually-impaired users

You can read this manual with Screen Reader ‘text-to-speech’ software.

You must set up the hardware and install the driver before you can use the printer.

Please use the Quick Setup Guide to set up the printer. You can find a printed copy in the box or view it on the CD-ROM we have supplied.

Please read this User’s Guide thoroughly before you use the printer. Keep the CD-ROM in a convenient place so you can use it quickly if you need to.

Please visit our web site at http://solutions.brother.com where you can get answers to Frequently Asked Questions (FAQs), Product Support and Technical Questions, and the latest Driver Updates and Utilities.

Version 2

Definitions of warnings, cautions, and notes

We use the following terms throughout this User's Guide:

You must follow these warnings to prevent possible personal injury.

You must follow these instructions to make sure you use the printer properly and do not damage it.

Remember these useful tips when you use the printer.

To use the printer safely

After you have just used the printer, some parts inside the printer will be extremely hot. When you open the front or back cover of the printer, never touch the shaded parts shown in the illustrations below.

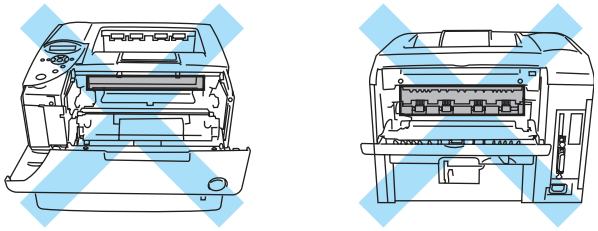

The fuser unit is marked with a caution label. Please do NOT remove or damage the label.

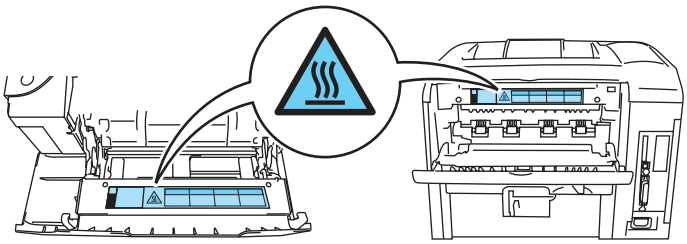

There are high voltage electrodes inside the printer. Before you clean the printer, clear a paper jam or replace parts, make sure you have turned off the power switch and unplugged the printer from the AC power outlet/socket.

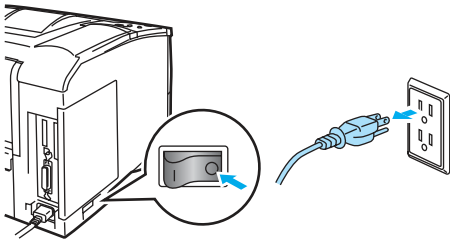

Do not handle the plug with wet hands - it might give you an electrical shock.

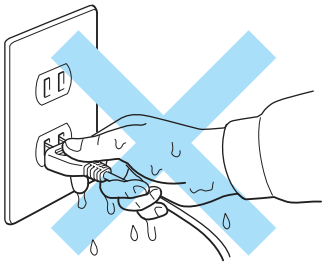

Caution

- Use neutral detergents for cleaning. Cleaning with volatile liquids such as thinner or benzene will damage the surface of the printer.
- Do not use cleaning materials that contain ammonia. They will damage the printer and the toner cartridge.

Trademarks

The Brother logo is a registered trademark of Brother Industries, Ltd.

Apple, the Apple Logo and Macintosh are registered trademarks in the United States and other countries, and TrueType is a trademark of Apple Computer, Inc.

Epson is a registered trademark and FX-80 and FX-850 are trademarks of Seiko Epson Corporation.

Hewlett Packard is a registered trademark and HP LaserJet 6P, 6L, 5P, 5L, 4, 4L 4P, III, IIIP, II, and IIP are trademarks of Hewlett-Packard Company.

IBM, IBM PC, and Proprinter are registered trademarks of International Business Machines Corporation.

Microsoft, MS-DOS, Windows and Windows NT are registered trademarks of Microsoft Corporation in the U.S. and other countries.

PostScript is a registered trademark of Adobe Systems Incorporated.

SuSE is a registered trade mark of SuSE Linux AG.

Linux is a registered trade mark of Linus Torvalds.

RED HAT is a registered trade mark of Red Hat. Inc.

Mandrake is a registered trade mark of Mandrake Soft SA.

All other terms and brand and product names mentioned in this User's Guide are registered trademarks of their respective companies.

Compilation and Publication Notice

Under the supervision of Brother Industries Ltd., this manual has been compiled and published, covering the latest product's descriptions and specifications.

The contents of this manual and the specifications of this product are subject to change without notice.

Brother reserves the right to make changes without notice in the specifications and materials contained herein and shall not be responsible for any damages (including consequential) caused by reliance on the materials presented, including but not limited to typographical and other errors relating to the publication.

©2003 Brother Industries Ltd.

Shipment of the Printer

If for any reason you must ship your Printer, carefully package the Printer to avoid any damage during transit. It is recommended that you save and use the original packaging. The Printer should also be adequately insured with the carrier.

Table of Contents

Definitions of warnings, cautions, and notes i
To use the printer safely ii
Trademarks iii
Compilation and Publication Notice iii
Table of Contents iv

1 About this printer 1-1
What is in the box? 1-1
Interface cable 1-1
Front view 1-2
Back view 1-3
Positioning the printer 1-4
Power supply 1-4
Environment 1-4
What kind of paper can I use? 1-5
Type and size of paper 1-5
Recommended paper 1-7
Printable area 1-8
Printing methods 1-10
Printing on plain paper 1-10
Printing on plain paper from the paper tray 1-10
Printing on plain paper from the multi-purpose tray (MP tray) 1-13
Printing on thick paper, labels and card stock 1-16
Printing on envelopes 1-21
Types of envelopes to avoid 1-21
Printing on envelopes from the MP tray 1-23
Printing on transparencies 1-28
Printing on transparencies from the paper tray 1-28
Printing on transparencies from the MP tray 1-31
Printing on both sides of the paper 1-35
Manual duplex printing from the paper tray (For PCL printer driver) 1-35
Manual duplex printing from the multi-purpose tray 1-36
Automatic duplex printing (available for HL-6050D and HL-6050DN only) 1-37
Booklet printing (for the PCL printer driver) (available for HL-6050D and HL-6050DN only) 1-39
Guidelines for printing on both sides of the paper 1-40
Carbon copy printing 1-42

2 Driver and software 2-1
Printer driver 2-1
For Windows® 2-2
Features in the PCL printer driver 2-2
Features in the BR-Script printer driver (PS printer driver) 2-10
For Macintosh® 2-16
Software (Windows® users) 2-19
Software for Networks 2-19
BRAdmin Professional 2-19
Driver Deployment Wizard 2-19
Web BRAdmin 2-19
Automatic emulation selection 2-20
Automatic interface selection 2-20
Printer settings 2-21
Factory settings 2-21

3 Control panel 3-1
Control panel 3-1
Buttons 3-2
Go button 3-2
Job Cancel button 3-2
Reprint button 3-3
Reprinting from RAM 3-3
Reprinting the last job 3-3
Printing Proof data 3-4
Printing Public data 3-5
Printing Secure data 3-5
+ or - button 3-7
To move through menus on the LCD 3-7
To enter numbers 3-7
Back button 3-7
Set button 3-7
Light-emitting diode (LED) 3-8
Data - Orange LED 3-8
Liquid Crystal Display (LCD) 3-9
Back light 3-9
LCD message 3-10
Printer status messages 3-10
How to use the control panel 3-11
Control Panel LCD menu 3-13
INFORMATION 3-14
PAPER 3-15
QUALITY 3-15
SETUP 3-16
PRINT MENU 3-17
NETWORK (only on a Network) 3-20
INTERFACE 3-21
RESET MENU 3-21
Set IP Address 3-22
About emulation modes 3-23
HP LaserJet Mode 3-23
BR-Script 3 Mode 3-23
EPSON FX-850 and IBM Proprinter XL Mode 3-23
List of factory settings 3-24
Network factory default setting 3-24
For visually-impaired users 3-28
Buzzer indications 3-28
Braille symbols 3-29

4 Options 4-1
Optional accessories and supplies 4-1
Lower tray unit (LT-6000) 4-2
Network board (NC-6100h) (For HL-6050 and HL-6050D) 4-3
Installing the network board 4-3
Wireless print server (NC-7100w) 4-6
Installing the network board 4-6
CompactFlash® card 4-9
Inserting the CompactFlash® card 4-10
DIMM 4-11
Installing additional memory 4-12
Optional fonts package 4-15
Selecting the optional fonts 4-15

5 Routine maintenance 5-1
Replacing the consumable items 5-1
Toner cartridge 5-2
TONER LOW Message 5-2
TONER LIFE END message 5-2
Replacing the toner cartridge 5-3
Drum unit 5-8
CHANGE DRUM SOON message 5-8
Replacing the drum unit 5-8
Replacing Maintenance Parts 5-13
Maintenance Messages 5-13
Cleaning 5-14
Cleaning the outside of the printer 5-14
Cleaning the inside of the printer 5-15
Cleaning the corona wire 5-17

6 Troubleshooting 6-1
LCD messages 6-1
Error messages 6-1
Maintenance messages 6-3
Call service messages 6-3
Troubleshooting paper handling 6-4
Paper jams and how to clear them 6-5
JAM MP TRAY (paper jam in the multi-purpose tray) 6-6
JAM TRAY 1 / TRAY 2 (Paper jam inside the Paper tray) 6-7
JAM INSIDE (paper jam inside the printer) 6-9
JAM REAR (paper jam behind the back output tray) 6-12
JAM DUPLEX (paper jam in the duplex unit) 6-15
Improving the print quality 6-17
Solving print problems 6-22
Other problems 6-23
Printing from DOS 6-23
BR-Script 3 6-23

7 Appendix (Specifications, fonts and bar code) A-1
Printer specifications A-1
Engine A-1
Controller A-2
Software A-2
Control panel A-2
Paper handling A-3
Media specifications A-3
Supplies A-3
Dimensions / Weights A-4
General A-4
System requirements A-4
Important information for choosing your paper A-5
Quick reference for bar code control commands A-7
Print bar codes or expanded characters A-7

8 Appendix (For Europe and Other Countries) B-1
Brother Numbers B-1
Important information: Regulations B-2
Radio interference (220 to 240 volt model only) B-2
IEC 60825 specification (220 to 240 volt model only) B-2

Internal laser radiation **B-2**
IMPORTANT - For Your Safety B-3
Disconnect device **B-3**
Caution for LAN connection (For model HL-6050DN only) **B-3**
IT power system (For Norway only) **B-3**
Geräuschemission / Acoustic noise emission (for Germany only) B-3
Wiring information (for UK) B-3

9 **Appendix (For USA and Canada)** **C-1**
Brother Numbers **C-1**
Important information: Regulations C-3
Federal Communications Commission (FCC) Declaration of Conformity (For USA) C-3
Industry Canada Compliance Statement (For Canada) C-4
Laser Notice C-4
Laser Safety (100 to 120 volt model only) C-4
FDA Regulations (100 to 120 volt model only) C-4
Internal laser radiation **C-4**
IMPORTANT - For Your Safety C-5
Disconnect device **C-5**
Caution for LAN connection (For model HL-6050DN only) **C-5**

10 **Index** **I-1**

1 About this printer

What is in the box?

When you unpack the printer, check to see that you have all of the following parts.

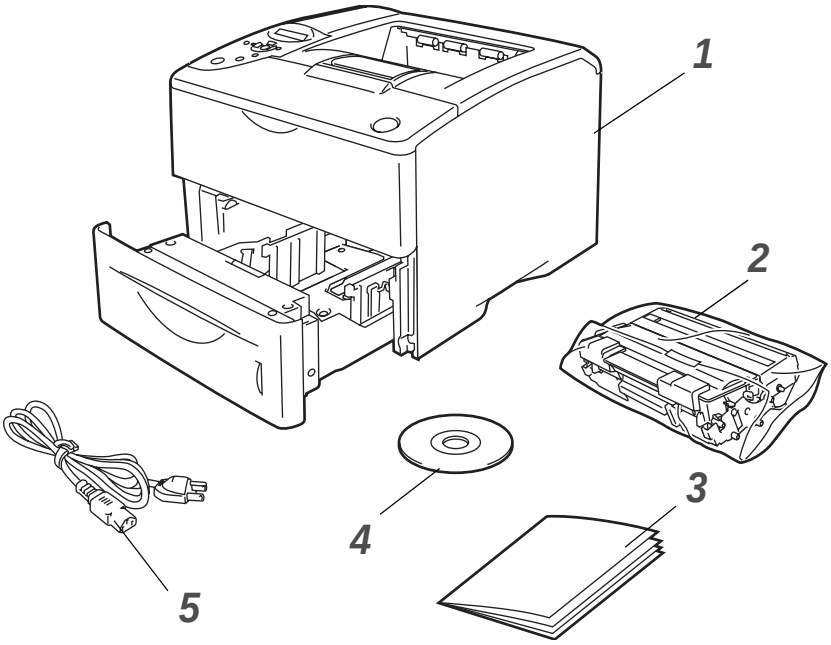

1 Printer
2 Drum unit assembly (with toner cartridge included)
3 Quick setup guide
4 CD-ROM
5 AC power cord

Components may differ from one country to another.

Figure 1-1

The power cord may be slightly different than the one shown in the Figure 1-1, depending on which country the printer was bought in.

Interface cable

- An interface cable is not a standard accessory.
- Some computers have a USB and a parallel port. Please buy the appropriate cable for the interface you intend to use.
- Most parallel cables support bi-directional communication, but some might have an incompatible pin assignment or may not be IEEE 1284-compliant.
- It is recommended to use a parallel interface cable or USB interface cable that is no longer than 2 meters (6 feet).
- When you use a USB cable, make sure that you connect it to the USB connector of your PC.
- Please make sure that you use a Hi-Speed USB 2.0 certified cable if your computer uses a Hi-Speed USB 2.0 interface.
- Do not connect the USB cable to a non-powered hub or a Macintosh® keyboard.

Front view

Front view

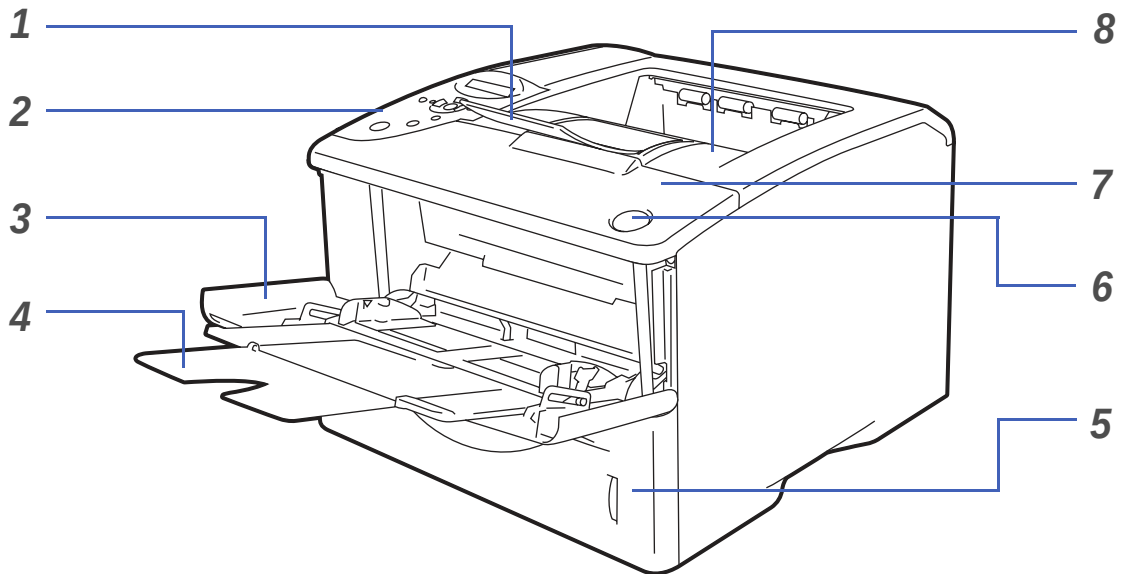

Figure 1-2

1 Face down output tray support flap (support flap)
2 Control panel
3 Multi-purpose tray (MP tray)
4 MP tray support flap
5 Paper tray
6 Front cover release button
7 Front cover
8 Face down output tray (top output tray)

Back view

Back view*

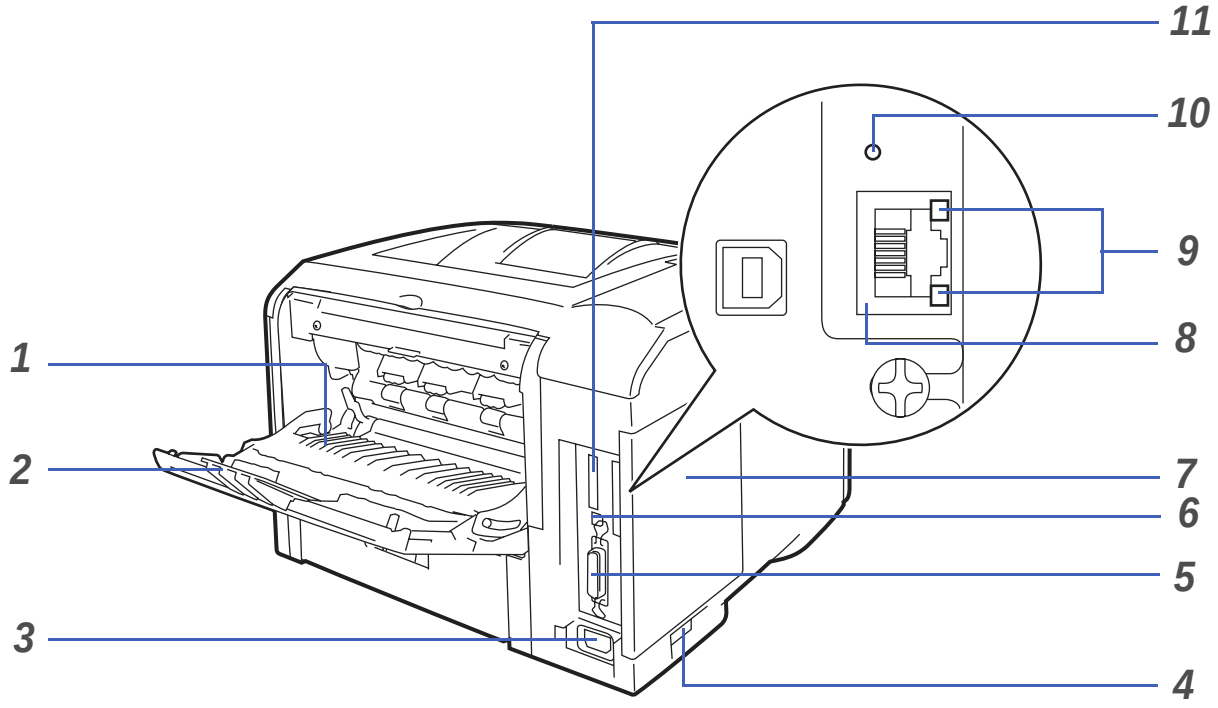

Figure 1-3

1 Face up output tray (back output tray)
2 Face up output tray support
3 AC power connector
4 Power switch
5 Parallel interface connector
6 USB interface connector
7 Side cover
8 (HL-6050DN) 10/100BASE-TX port
9 (HL-6050DN) network LED (light-emitting diode)
10 (HL-6050DN) network test button
11 CompactFlash® card slot

* *The printer illustration is based on HL-6050DN.*

Positioning the printer

Please read the following before you use the printer.

Power supply

Use the printer within the recommended power range.

Power source:	USA and Canada:	AC 100 to 120 V, 50/60 Hz
	Europe and Australia:	AC 220 to 240 V, 50/60 Hz

The power cord, including extensions, should be no longer than 5 meters (16½ feet).

Do not share the same power circuit with other high-power appliances, such as an air conditioner, copier, shredder and so on. If you cannot avoid using the printer with these appliances, we recommend that you use a voltage transformer or a high-frequency noise filter.

Use a voltage regulator if the power source is not stable.

Environment

- Make sure that the power outlet/socket is near the printer and is easy to get to so that, if there is an emergency, it can be easily unplugged.
- Only use the printer within the following ranges of temperature and humidity:

Temperature: 10 °C to 32.5 °C (50 °F to 90.5 °F)

Humidity: 20% to 80% (without condensation)

- The printer should be used in a well-ventilated room.
- Put the printer on a flat, horizontal surface.
- Keep the printer clean. Do not put the printer in a dusty place.
- Do not put the printer where the ventilation hole of the printer is blocked. Keep a gap of approximately 100 mm (4 in.) between the ventilation hole and the wall.
- Do not put the printer in direct sunlight. If you have to put it near a window, use a blind or a heavy curtain to protect the printer from direct sunlight.
- Do not put the printer near devices that contain magnets or generate magnetic fields.
- Do not subject the printer to strong physical shocks or vibrations.
- Do not expose the printer to open/naked flames or salty or corrosive gasses.
- Do not put objects on top of the printer.
- Do not put the printer near an air conditioner.
- Keep the printer horizontal when you carry it.

What kind of paper can I use?

Type and size of paper

The printer loads paper from the installed paper tray, manual feed tray (multi-purpose tray) or optional lower tray unit.

The names for the paper trays in the printer driver and this guide are as follows:

Paper tray	Tray 1
Multi-purpose tray	MP tray
Optional lower tray unit	Tray 2

While looking at this page on the CD-ROM, you can jump to the page for each printing method by clicking ⓘ in the table.

Media type Paper weight	**Tray 1**	**MP tray**	**Tray 2**	**Automatic duplex printing**	**Select the Media type from the printer driver**
Plain paper 75 g/m^2 to 105 g/m^2 (20 to 28 lb)	ⓘ	ⓘ	ⓘ	ⓘ	Plain paper
Recycled paper	ⓘ	ⓘ	ⓘ	ⓘ	Recycled paper
Bond paper Rough paper - 60 g/m^2 to 161 g/m^2 (16 to 43 lb)	ⓘ 60 g/m^2 to 105 g/m^2 (16 to 28 lb)	ⓘ 60 g/m^2 to 161 g/m^2 (16 to 43 lb)	ⓘ 60 g/m^2 to 105 g/m^2 (16 to 28 lb)		Bond paper
Thick paper 105 g/m^2 to 161 g/m^2 (28 to 43 lb)		ⓘ			Thick paper or Thicker paper
Transparency	ⓘ Up to 10 sheets A4 or Letter	ⓘ Up to 10 sheets A4 or Letter	ⓘ Up to 10 sheets A4 or Letter		Transparencies
Labels		ⓘ A4 or Letter			Thicker paper
Envelopes		ⓘ			Envelopes Envelopes - Thin
Card stock		ⓘ			Thick paper or Thicker paper
Thin paper 60 g/m^2 to 75 g/m^2 (16 to 20 lb)	ⓘ	ⓘ	ⓘ	ⓘ	Thin paper

When you print on thick paper, labels or card stock, we recommend that you select the media type setting in the printer driver according to the paper weight.

	Tray 1	MP tray	Tray 2	Automatic duplex printing
Paper size	A4, Letter, Legal, B5 (ISO), A5, B6 (ISO), A6, Executive, Folio	Width: 69.9 to 215.9 mm (2.75 to 8.5 in.) Length: 116 to 406.4 mm (4.57 to 16 in.)	A4, Letter, Legal, B5 (ISO), A5, B6 (ISO), A6, Executive, Folio	A4, Letter, Legal
Number of sheets	500 sheets (80 g/m^2 or 20 lb)	100 sheets (80 g/m^2 or 20 lb)	500 sheets (80 g/m^2 or 20 lb)	

You must use the face up output tray (back output tray) for certain print media.

When looking at this page on the CD-ROM, you can jump to the page for each printing method by clicking the ⓘ in the table.

Media type	Face down	Face up
Plain paper	ⓘ	ⓘ
Recycled paper	ⓘ	ⓘ
Bond paper	ⓘ	ⓘ
Thick paper	ⓘ	ⓘ
Thcker paper	ⓘ	ⓘ
Transparency	ⓘ	ⓘ
Labels		ⓘ
Envelope		ⓘ
Card stock		ⓘ
Thin paper	ⓘ	ⓘ

You can use the control panel **Menu** buttons to select the priority of the paper source in the **PAPER** menu. See *PAPER* on page 3-15.

We recommend that you use face up printing when you print on transparencies.

Recommended paper

	Europe	USA
Plain paper	Xerox Premier 80 g/m^2	Xerox 4200DP 20 lb
Recycled paper	Xerox Recycled Supreme 80 g/m^2	
Transparency	3M CG3300	3M CG 3300
Labels	Avery laser label L7163	Avery laser label #5160

- Before you buy a lot of paper, please test some to make sure that the paper is suitable.
- Use paper that is made for plain-paper copying.
- Use paper that is 75 to 90 g/m^2 (20 to 24 lb).
- Use neutral paper. Do not use acidic or alkaline paper.
- Use long-grain paper.
- Use paper with a moisture content of approximately 5%.
- This printer can use recycled paper that meets the DIN 19309 specification.

Caution

Do not use ink jet paper, it may cause a paper jam and damage your printer.

To help you choose which paper to use with this printer, see *Important information for choosing your paper* on page A-5.

When you print on smaller sized short-grain paper (A5, A6 and Executive), do the following:
Go to the **Basic** tab of the printer driver, in the **Media Type** option select **Envelopes**. And then, at the back of the printer, open the back output tray and push down the two blue tabs one on the left and one on the right hand side (as shown in Figure 1-4). When you have finished printing, close the back output tray to reset the two blue tabs back to their original position.

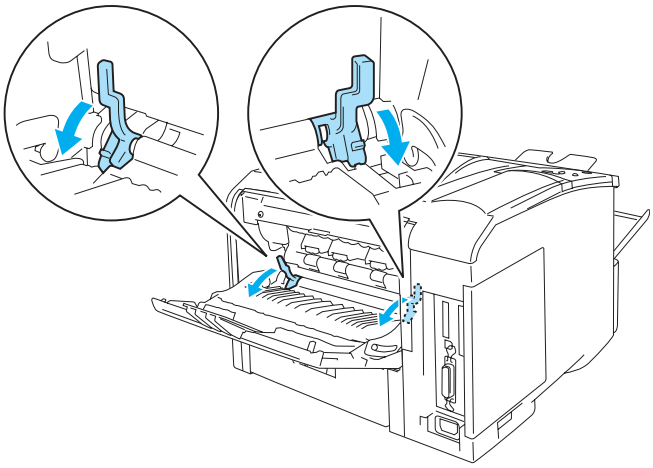

Figure 1-4

Printable area

When using PCL (standard driver) emulation, the edges of the paper that cannot be printed on are shown below.

Portrait

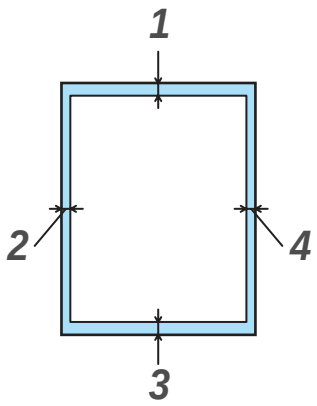

Figure 1-5

	A4	Letter	Legal	B5 (ISO)	Executive	A5	A6	B6 (ISO)
1	4.2 mm (0.17 in.)	4.2 mm (0.17 in.)	4.2 mm (0.17 in.)	4.2 mm (0.17 in.)	4.2 mm (0.17 in.)	4.2 mm (0.17 in.)	4.2 mm (0.17 in.)	4.2 mm (0.17 in.)
2	6.01 mm (0.24 in.)	6.35 mm (0.25 in.)	6.35 mm (0.25 in.)	6.01 mm (0.24 in.)	6.35 mm (0.25 in.)	6.01 mm (0.24 in.)	6.01 mm (0.24 in.)	6.01 mm (0.24 in.)
3	4.2 mm (0.17 in.)	4.2 mm (0.17 in.)	4.2 mm (0.17 in.)	4.2 mm (0.17 in.)	4.2 mm (0.17 in.)	4.2 mm (0.17 in.)	4.2 mm (0.17 in.)	4.2 mm (0.17 in.)
4	6.01 mm (0.24 in.)	6.35 mm (0.25 in.)	6.35 mm (0.25 in.)	6.01 mm (0.24 in.)	6.35 mm (0.25 in.)	6.01 mm (0.24 in.)	6.01 mm (0.24 in.)	6.01 mm (0.24 in.)

When using BR-Script emulation, the edges of the paper that cannot be printed on are 4.32 mm (0.17 in.).

Landscape

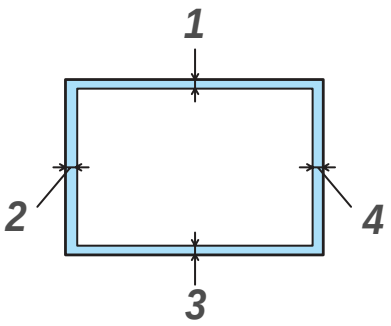

Figure 1-6

	A4	Letter	Legal	B5 (ISO)	Executive	A5	A6	B6 (ISO)
1	4.2 mm (0.17 in.)	4.2 mm (0.17 in.)	4.2 mm (0.17 in.)	4.2 mm (0.17 in.)	4.2 mm (0.17 in.)	4.2 mm (0.17 in.)	4.2 mm (0.17 in.)	4.2 mm (0.17 in.)
2	5.0 mm (0.19 in.)	5.08 mm (0.2 in.)	5.08 mm (0.2 in.)	5.0 mm (0.19 in.)	5.08 mm (0.2 in.)	5.0 mm (0.19 in.)	5.0 mm (0.19 in.)	5.0 mm (0.19 in.)
3	4.2 mm (0.17 in.)	4.2 mm (0.17 in.)	4.2 mm (0.17 in.)	4.2 mm (0.17 in.)	4.2 mm (0.17 in.)	4.2 mm (0.17 in.)	4.2 mm (0.17 in.)	4.2 mm (0.17 in.)
4	5.0 mm (0.19 in.)	5.08 mm (0.2 in.)	5.08 mm (0.2 in.)	5.0 mm (0.19 in.)	5.08 mm (0.2 in.)	5.0 mm (0.19 in.)	5.0 mm (0.19 in.)	5.0 mm (0.19 in.)

When using BR-Script emulation, the edges of the paper that cannot be printed on are 4.32 mm (0.17 in.).

Printing methods

Printing on plain paper

You can print on plain paper from the paper tray or multi-purpose tray. For the paper you want to use, please see *What kind of paper can I use?* on page 1-5.

Printing on plain paper from the paper tray

1. Select the **Paper Size**, **Media Type**, **Paper Source**, and other settings in the printer driver.
   Media Type: Plain Paper
   Paper Source: Tray 1 (or Tray 2)

PCL (standard) printer driver

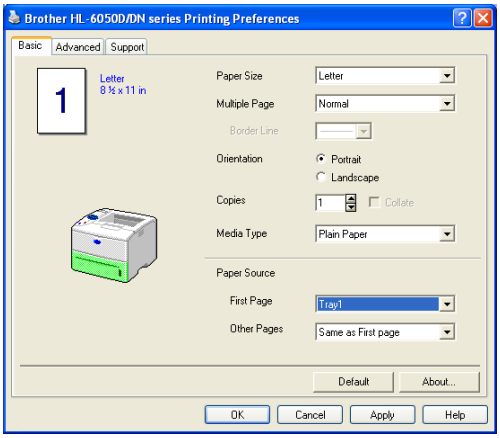

BR-Script printer driver

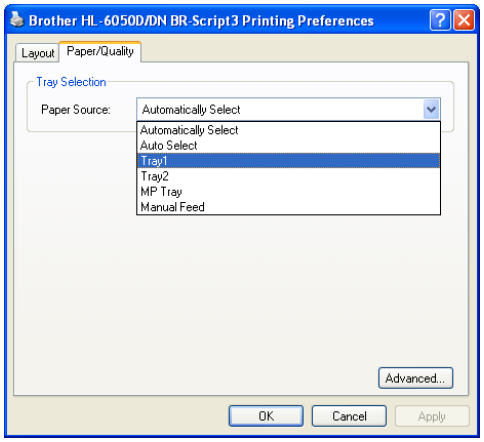

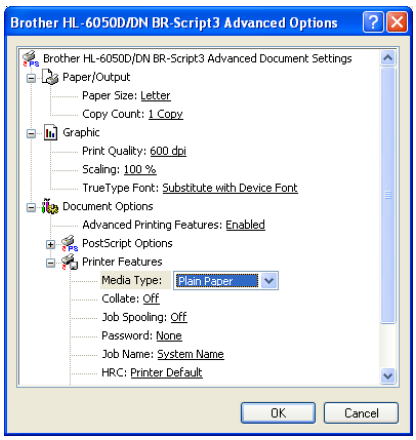

2 Pull the paper tray completely out of the printer.

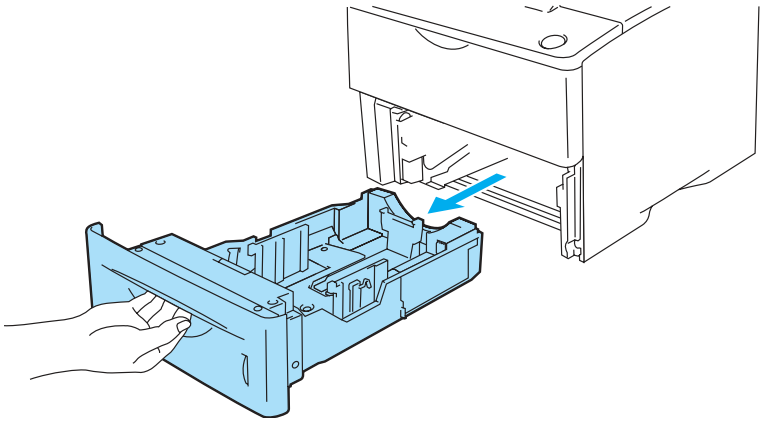

Figure 1-7

3 While pressing the blue paper-guide release lever, slide the paper guides to fit the paper size. Check that the guides are firmly in the slots.

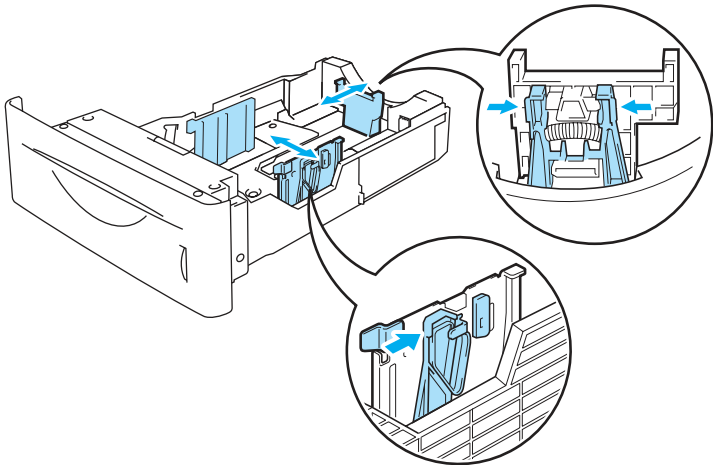

Figure 1-8

4 To avoid paper jams and misfeeds, fill up the paper tray with small stacks of paper that you have fanned well. Put the side that is going to be printed on first (blank side), face down, with the leading edge (top) of the paper in last (at the front of the tray). Check that the paper is flat in the paper tray at all four corners.

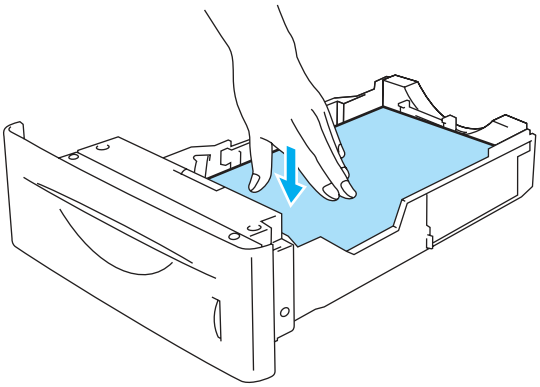

Figure 1-9

Do not put more than 500 sheets of paper (80 g/m^2) in the paper tray at any one time, or it may cause a jam. Check that paper is below the maximum paper height guide (▼).

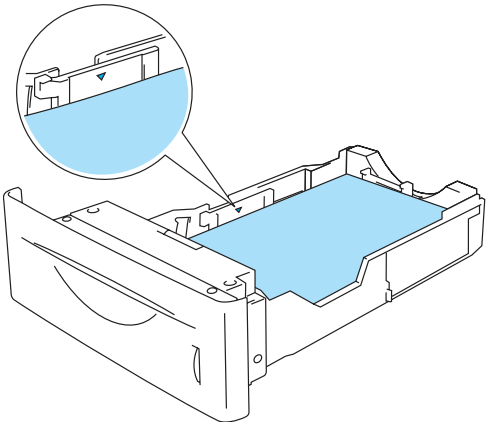

Figure 1-10

5 Put the paper tray firmly back in the printer. Check that it is inserted fully into the printer.

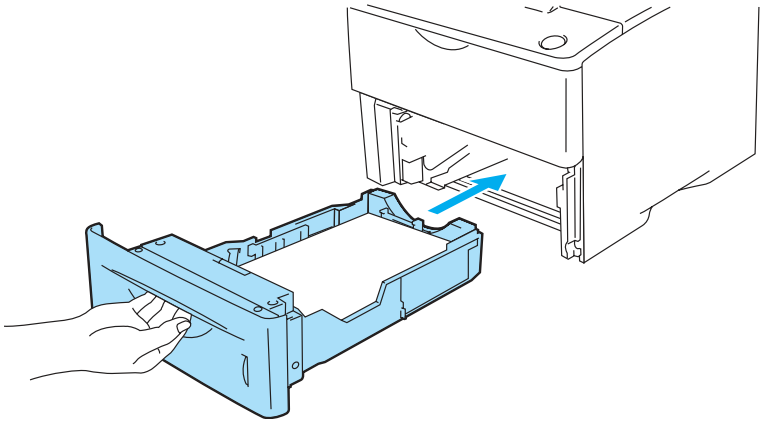

Figure 1-11

6 Send the print data to the printer.

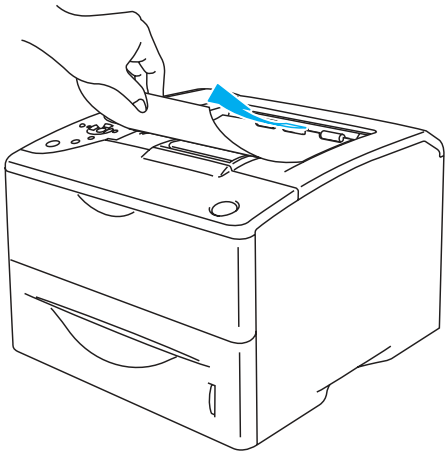

Figure 1-12

Printing on plain paper from the multi-purpose tray (MP tray)

The printer automatically turns on the MP Tray mode when you put paper in the multi-purpose tray.

1 Select the **Paper Size**, **Media Type**, **Paper Source**, and other settings in the printer driver.
Media Type: Plain Paper
Paper Source: MP Tray

PCL (standard) printer driver

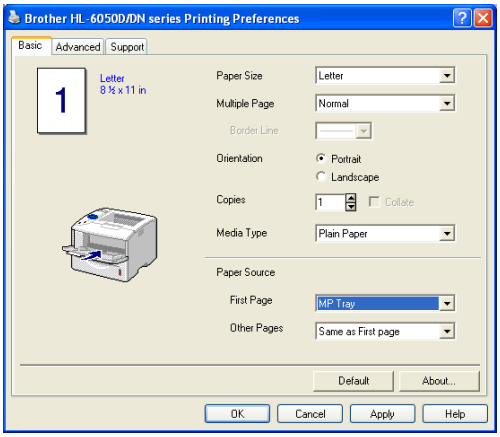

BR-Script printer driver

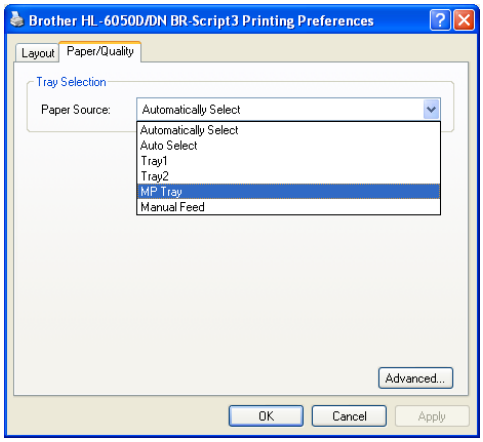

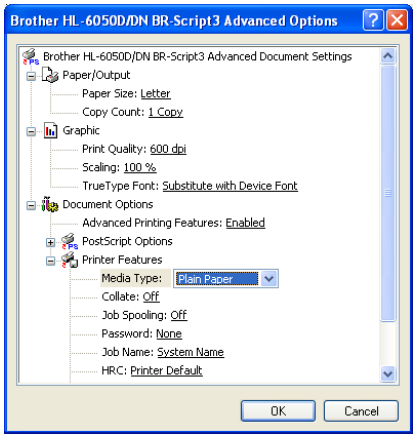

2 Open the MP tray and lower it gently.

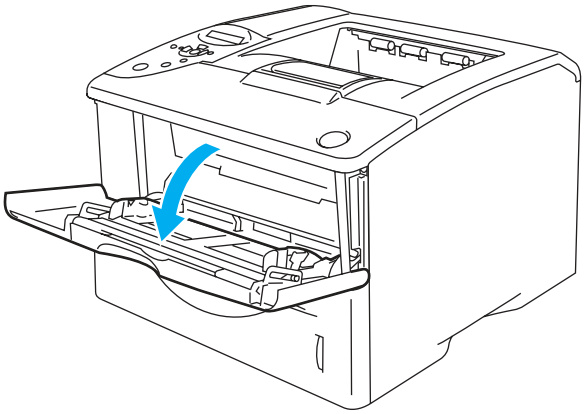

Figure 1-13

3 Pull out the MP tray support flap.

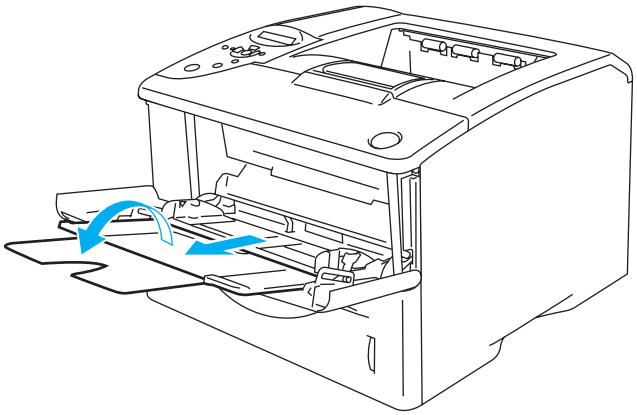

Figure 1-14

4 Put paper in the MP tray. Put the side to be printed on first, face up, with the leading edge (top) of the paper in first. Make sure the paper touches the back of the tray and remains under the maximum paper height guides on both sides of the tray. Do not put more than 100 sheets of paper (80 g/m^2 or 20 lb) in the MP tray at any one time, or it may cause a jam.

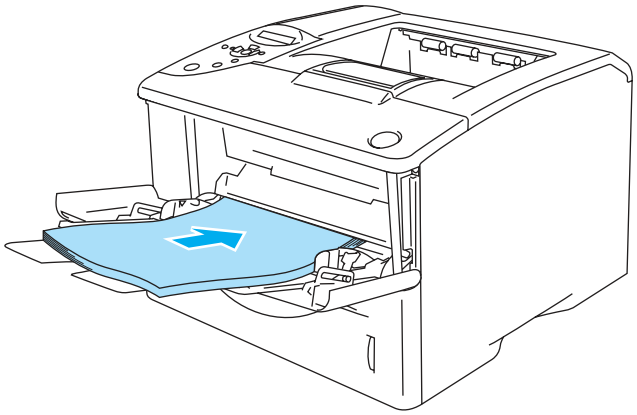

Figure 1-15

Make sure that the paper is straight and in the proper position on the MP tray. If it is not, the paper may not be fed properly, resulting in a skewed printout or a paper jam.

5 While pressing the paper-guide release lever, slide the paper guide to fit the paper size.

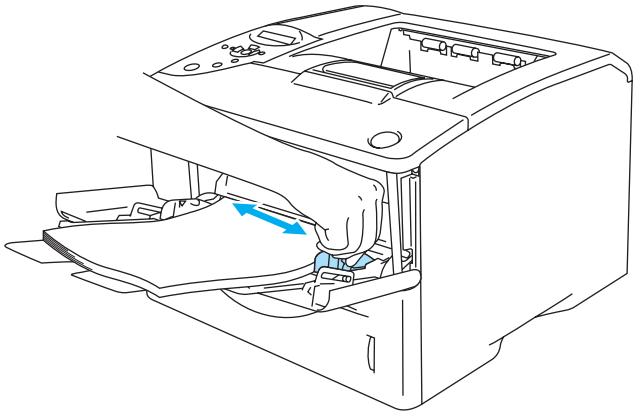

Figure 1-16

When you put paper in the MP tray, please remember the following:

- The side to be printed on must be face up.
- During printing, the inside tray rises to feed paper into the printer.
- Put the leading edge (top of the paper) in first and push it gently into the tray.
- The top of the paper stack must be under the maximum paper height guides that are on both sides of the tray.

6 Send the print data to the printer.

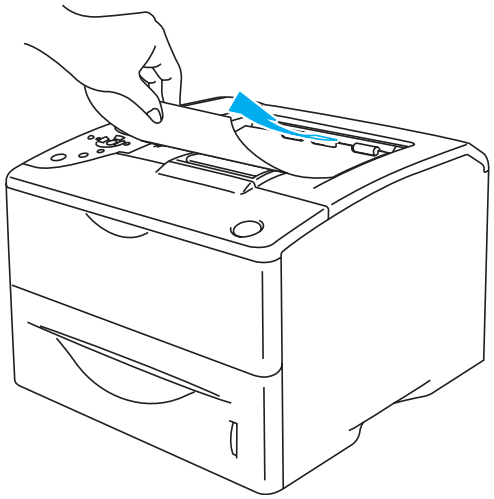

Figure 1-17

Printing on thick paper, labels and card stock

- Do not use damaged, curled, wrinkled, or irregularly shaped paper.
- Do not use labels without a mount.
- We recommend that you use paper that is made for laser printers.
- Use paper that can withstand intense heat; the interior of the printer reaches very high temperatures while printing.

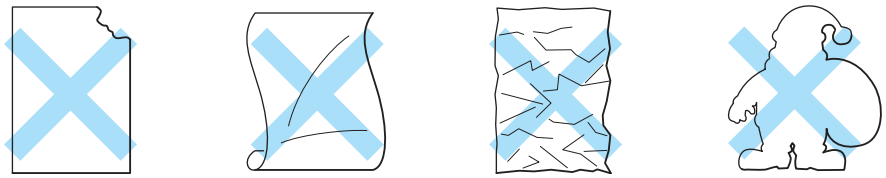

Figure 1-18

- Before you print paper with holes, such as organizer sheets, you must fan the stack to avoid paper jams and misfeeds.

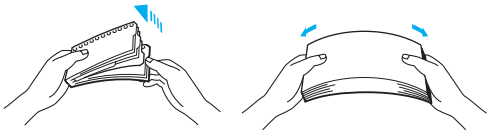

Figure 1-19

- Do not place the punched holes of organizer sheets near the actuator (paper sensor).
- Do not use organizer sheets that are stuck together. The glue on them might cause damage to the printer.
- Do not put different types of paper in the paper tray at the same time because it may cause paper jams or misfeeds.
- Do not print thick paper, labels or card stock using duplex printing.
- For proper printing, you must choose the same paper size from your software application as the paper in the tray.
- See *What kind of paper can I use?* on page 1-5.

Printing on thick paper, labels or card stock from the multi-purpose tray (MP tray)

When the back output tray is pulled down, the printer has a straight paper path from the MP tray through to the back of the printer. Use this paper feed and output method when you want to print on thick paper, labels or card stock.

The printer automatically turns on the MP tray mode when you put paper in the MP tray.

When you select the paper you want to use, see *What kind of paper can I use?* on page 1-5.

1. Select the **Paper Size**, **Media Type**, **Paper Source**, and other settings in the printer driver.
   Media Type: Thick Paper or Thicker Paper
   Paper Source: MP Tray

PCL (standard) printer driver

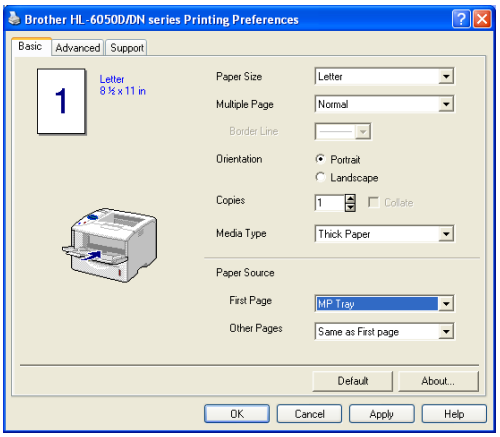

BR-Script printer driver

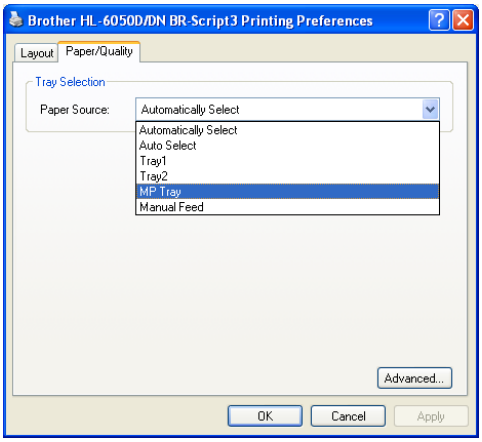

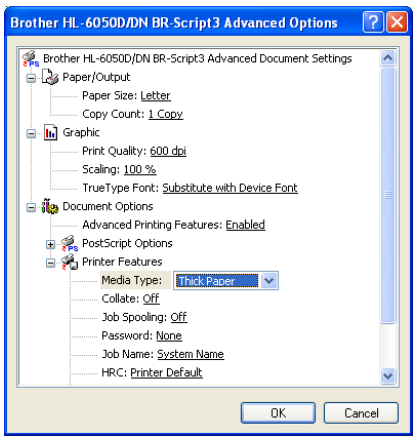

2 Open the back output tray, and then pull out the face up output tray support if necessary.

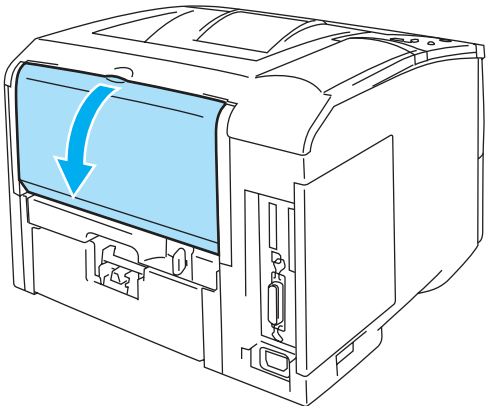

Figure 1-20

3 Open the MP tray and lower it gently.

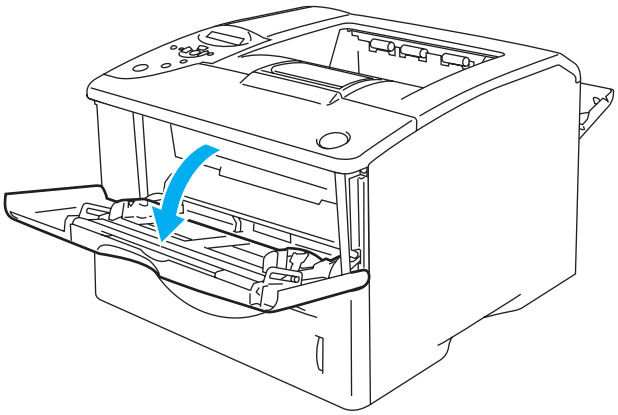

Figure 1-21

4 Pull out the MP tray support flap.

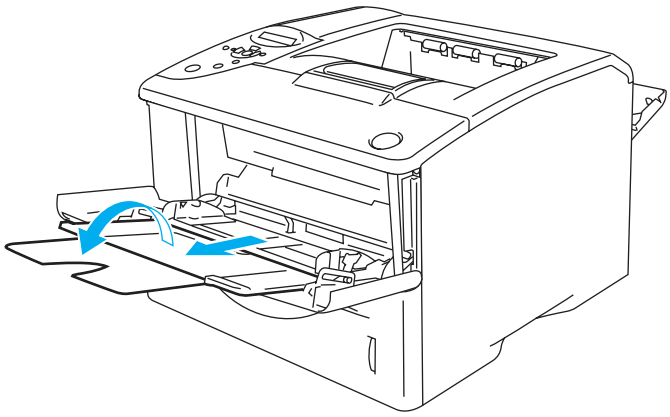

Figure 1-22

5 Put paper in the MP tray. Put the side to be printed on first, face up, with the leading edge (top) of the paper in first. Make sure the paper touches the back of the tray and remains under the maximum paper height guides on both sides of the tray.

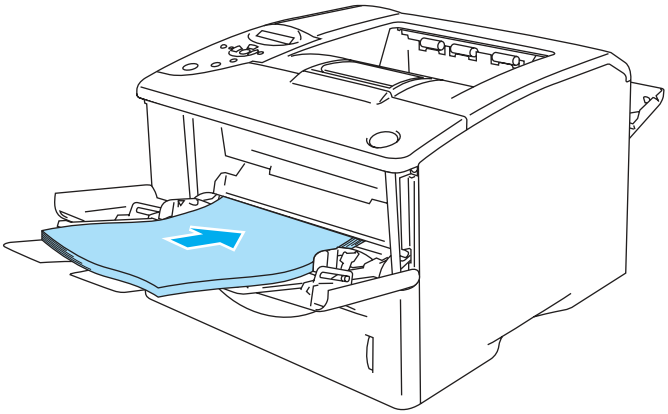

Figure 1-23

Make sure that the paper is straight and in the proper position in the MP tray. If it is not, the paper may not be fed properly, resulting in a skewed printout or a paper jam.

6 While pressing the paper-guide release lever, slide the paper guide to fit the paper size.

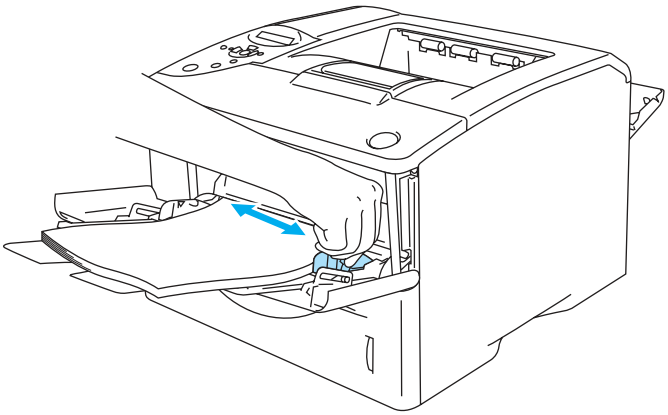

Figure 1-24

When you put paper in the MP tray, please remember the following:

- During printing, the inside tray rises to feed paper into the printer.
- The side to be printed on must be face up.
- Put the leading edge (top of the paper) in first and push it gently into the tray.
- The top of the paper stack must be under the maximum paper height guides that are on both sides of the tray.

7 Send the print data to the printer.

8 After you finish the print job, close the back output tray.

Caution

Remove each sheet immediately after printing. Stacking the sheets may cause a paper jam or the paper to curl.

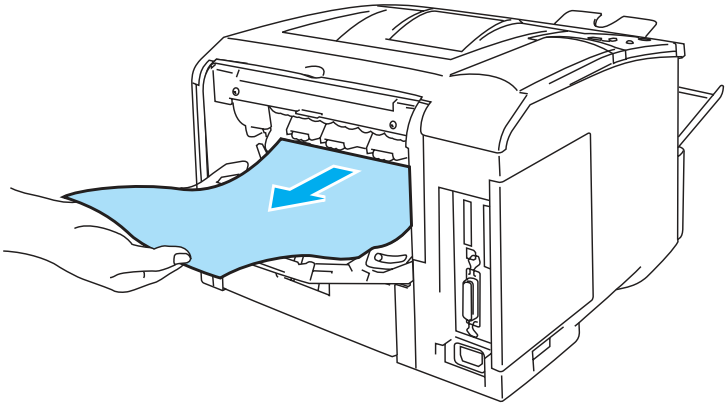

Figure 1-25

Printing on envelopes

Types of envelopes to avoid

Do not use envelopes which:

- are damaged, curled, wrinkled, or an usual shape
- are extremely shiny or textured
- have clasps, snaps or tie strings
- have self-adhesive components
- are of a baggy construction
- are not sharply creased
- are embossed (have raised writing on them)
- have been previously printed on by a laser printer
- are pre-printed on the inside
- cannot be arranged when put in a pile
- are made of paper that weighs more than the paper weight specifications for the printer
- have been badly made, with edges that are not straight or consistently square
- have windows, holes, cutouts or perforations

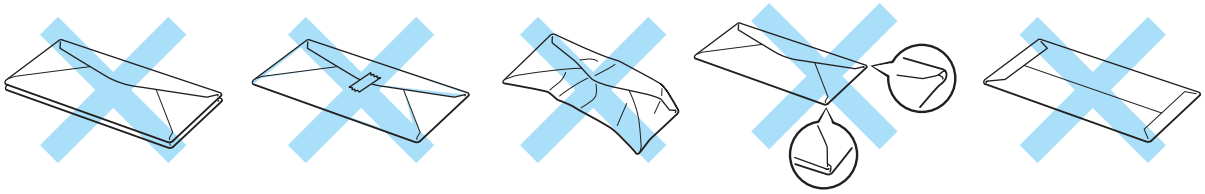

Figure 1-26

IF YOU USE ANY OF THE TYPES OF ENVELOPES LISTED ABOVE, THEY MAY DAMAGE YOUR PRINTER. THIS DAMAGE IS NOT COVERED UNDER ANY BROTHER WARRANTY OR SERVICE AGREEMENT.

- Before you print envelopes, you must fan the stack to avoid paper jams and misfeeds.

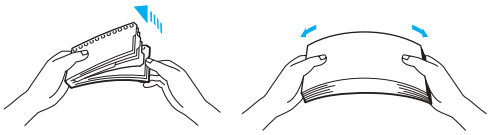

Figure 1-27

- Do not put different types of paper in the paper tray at the same time because it may cause paper jams or misfeeds.
- Do not print envelopes using duplex printing.
- For proper printing, you must choose the same paper size from your software application as the paper in the tray.
- See *What kind of paper can I use?* on page 1-5.

Most envelopes will be suitable for your printer. However, some envelopes will have feed and print quality problems due to the way they have been made. A suitable envelope should have edges with straight, well-creased folds and the leading edge should not be thicker than two pieces of paper. The envelope should lie flat and not be of baggy or flimsy construction. You should buy quality envelopes from a supplier who understands that you will be using the envelopes in a laser printer. Before you print many envelopes, test one to make sure that the print results are what you want.

Brother will not recommend a particular envelope because envelope manufacturers may change the envelope specifications. You are responsible for the quality and performance of the envelopes you use.

Printing on envelopes from the MP tray

When the back output tray is pulled down, the printer has a straight paper path from the MP tray through to the back of the printer. Use this paper feed and output method when you want to print envelopes.

The printer automatically turns on the MP Tray mode when you put paper in the MP tray.

1 Select the **Paper Size**, **Media Type**, **Paper Source**, and other settings in the printer driver.
Media Type: Envelopes
Paper Source: MP Tray

PCL (standard) printer driver

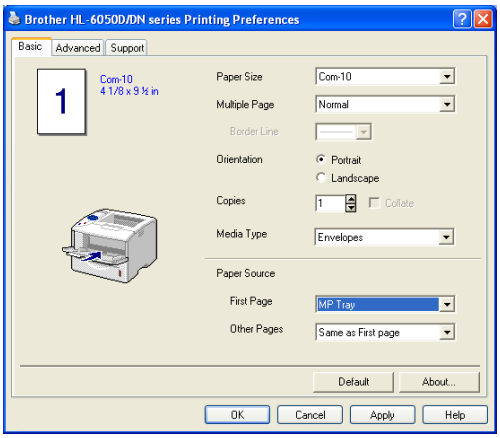

BR-Script printer driver

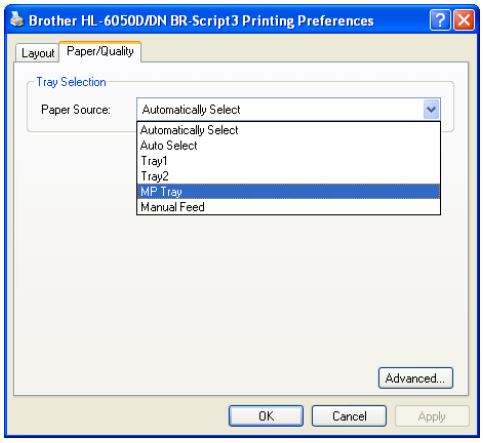

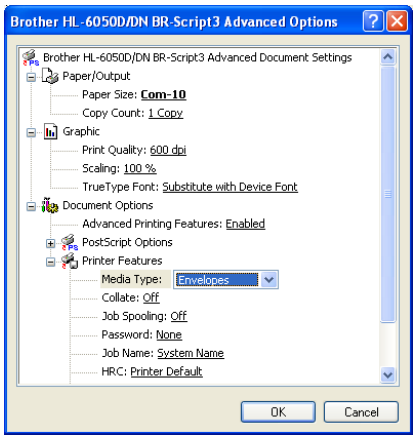

2 Open the back output tray, and then pull out the face up output tray support if necessary.

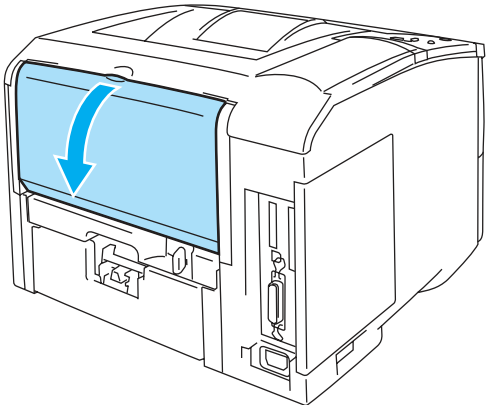

Figure 1-28

3 Open the MP tray and lower it gently.

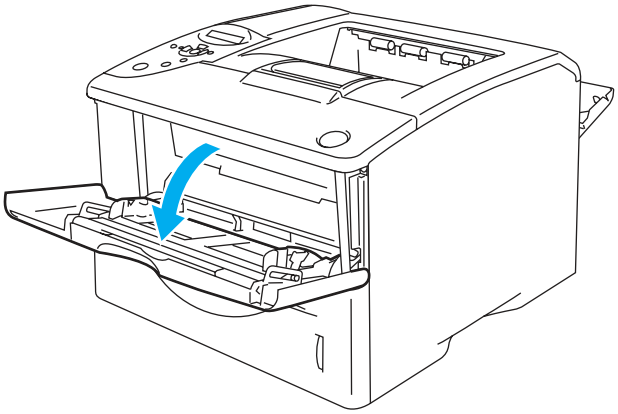

Figure 1-29

4 Pull out the MP tray support flap.

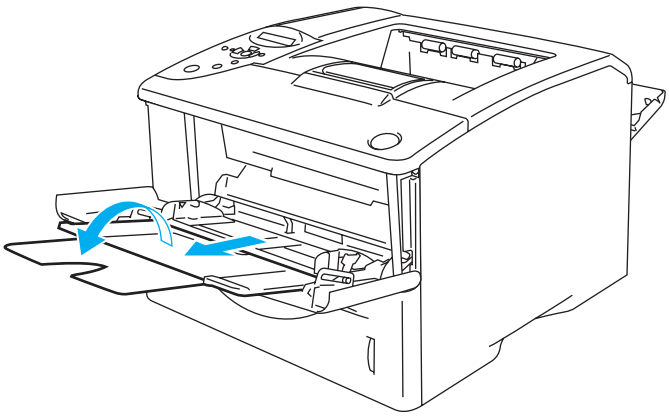

Figure 1-30

Envelopes that have been creased after they have been printed

At the back of the printer, open the back output tray and push down the two blue tabs one on the left and one on the right hand side (as shown in Figure 1-31). When you have finished printing your envelopes, close the back output tray to reset the two blue tabs back to their original position.

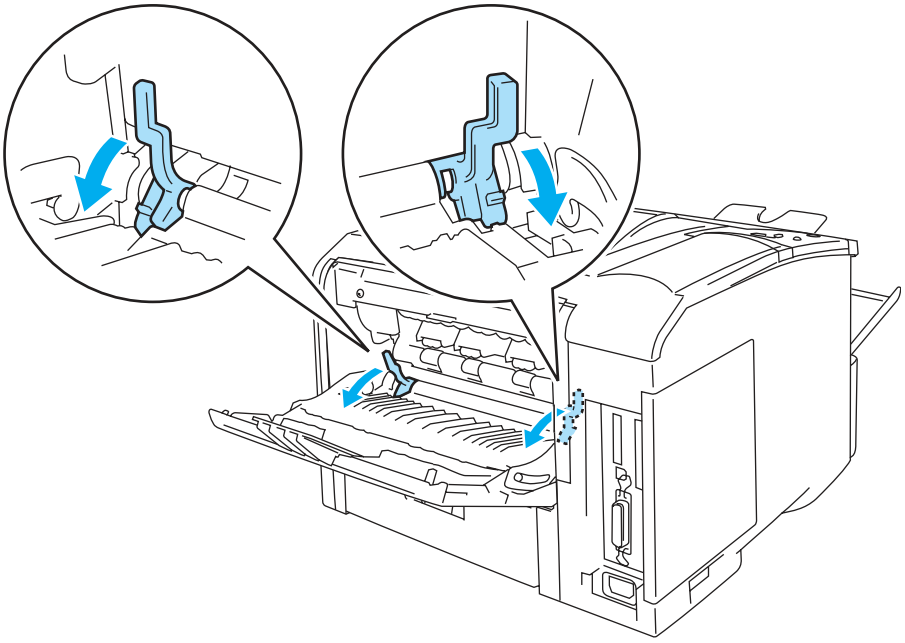

Figure 1-31

5 Put envelopes in the MP tray so that they touch the back of the tray and remain under the maximum paper height guides on both sides of the tray. Put the side to be printed on first, face up, with the leading edge (top) of the envelope in first. Do not put more than 3 envelopes in the MP tray at any one time, or it may cause a jam.

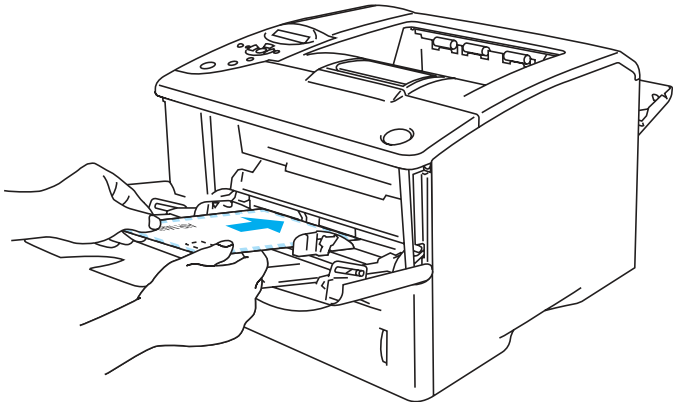

Figure 1-32

Make sure that the envelopes are neatly stacked and in the proper position in the MP tray. If they are not, the envelopes may not be fed properly, resulting in a skewed printout or a jam.

6 Press and slide the paper width guide to fit the envelope size.

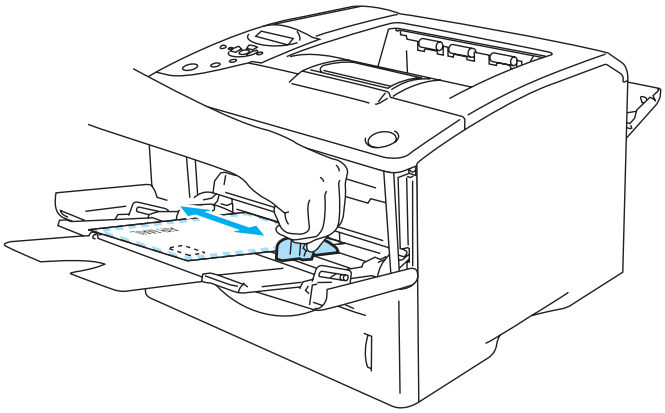

Figure 1-33

DL size double-flap envelopes

- If the DL size double flap envelope is creased after printing, go to the **Basic** tab, select **Paper Size** and then select **DL Long Edge**. Put a new DL size double-flap envelope in the MP tray with the longest edge of the envelope in first, then print again.

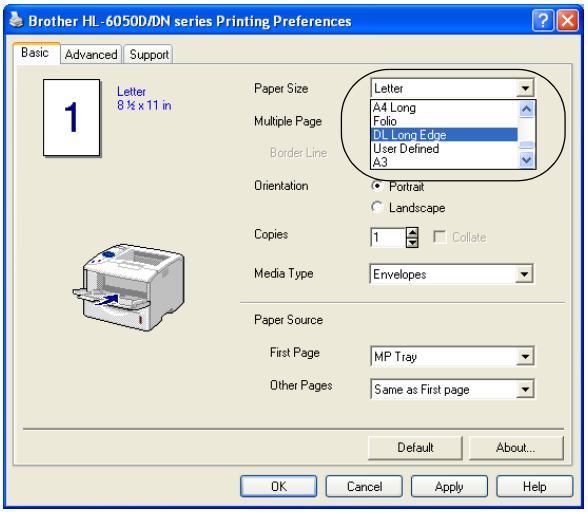

When you put envelopes in the MP tray, please remember the following;

- During printing, the inside tray rises to feed envelopes into the printer.
- The side to be printed on must be face up.
- Put the leading edge (top of the paper) in first and push it gently into the tray.
- The top of the envelope stack must be under the maximum paper height guides that are on both sides of the tray.

7 Send the print data to the printer.

8 After you finish the print job, close the back output tray.

- If envelopes get smudged during printing, in the printer driver select **MP Tray** as the **Paper Source** for a straight paper path. Then, set the **Media Type** to **Thick Paper** or **Thicker Paper** to increase the fixing temperature. To adjust the print density setting, See *QUALITY* on page 3-15.
- Envelope joints that are sealed by the manufacturer should be secure.
- All sides should be properly folded without any wrinkles or creases.

Printing on transparencies

You can print on transparencies from the paper tray or MP tray.

Do not touch transparencies that have just been printed because they are very hot.

Printing on transparencies from the paper tray

Do not put more than 10 transparencies in the paper tray.

1 Select the **Paper Size**, **Media Type**, **Paper Source**, and other settings in the printer driver.
Media Type: Transparencies
Paper Source: Tray 1 (or Tray 2)

PCL (standard) printer driver

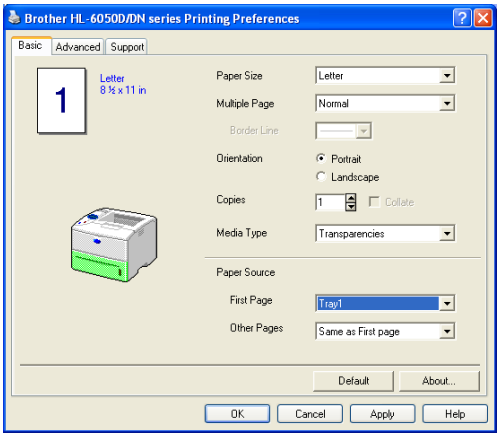

BR-Script printer driver

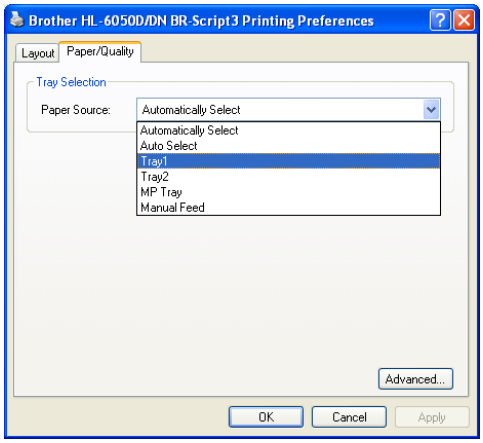

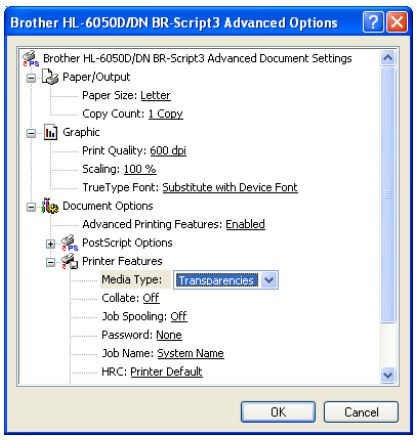

2 Pull the paper tray completely out of the printer.

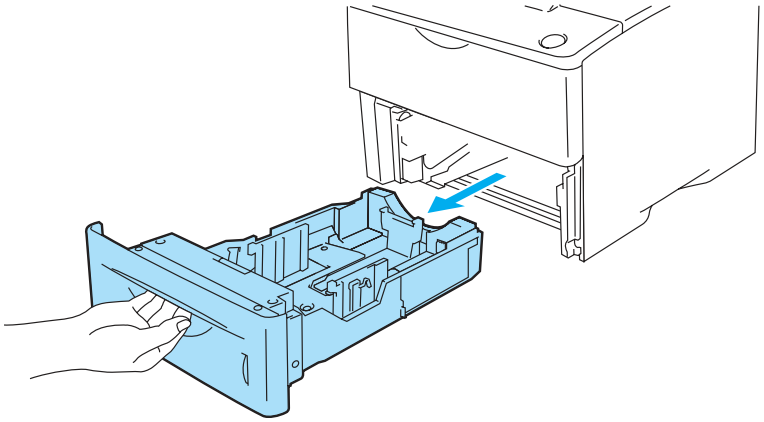

Figure 1-34

3 While pressing the blue paper guide release levers, slide the paper guides to fit the transparency size. Check that the guides are firmly in the slots.

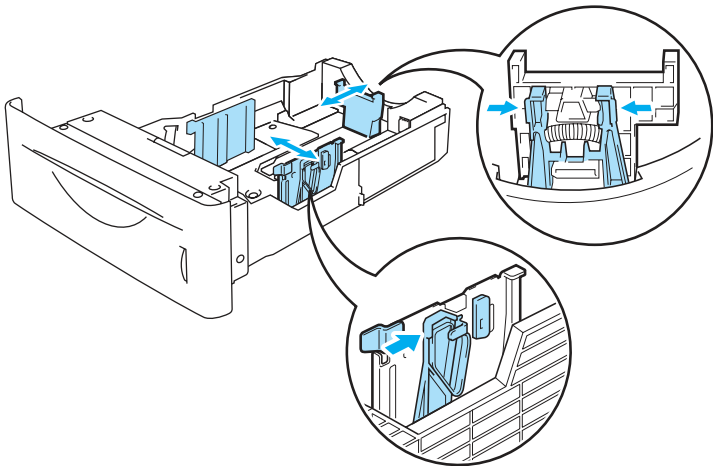

Figure 1-35

4 Put transparencies in the tray. Put the side that is going to be printed on face down, with the top of the paper at the front of the tray. Check that the transparencies are flat in the tray at all four corners.

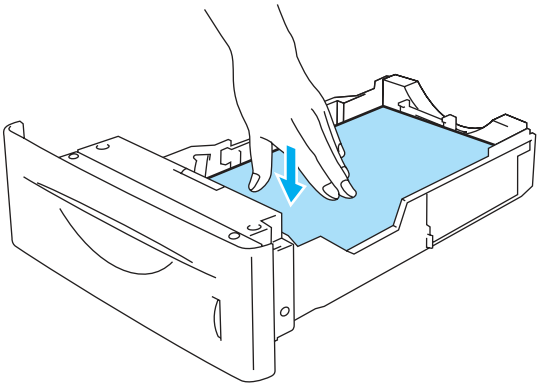

Figure 1-36

Do not put more than 10 transparencies in the tray at any one time, or it may cause a jam. Check that transparencies are below the maximum paper mark (▼).

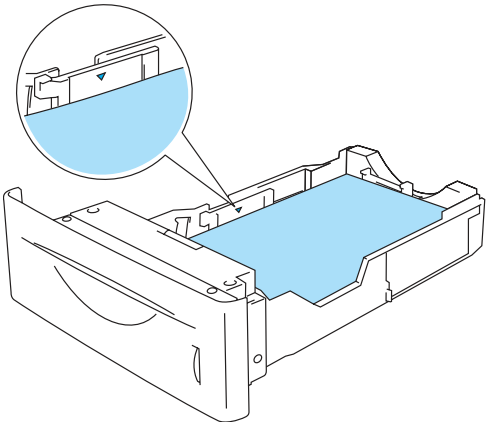

Figure 1-37

5 Put the paper tray firmly back in the printer. Check that it is inserted fully into the printer.

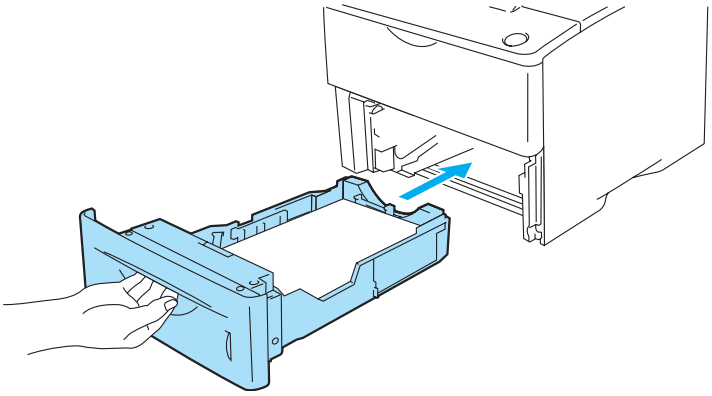

Figure 1-38

6 Send the print data to the printer.

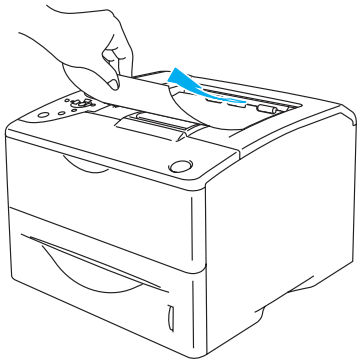

Figure 1-39

Caution

Remove each transparency before the next page is output on the top output tray to prevent transparencies from sticking to each other.

Printing on transparencies from the MP tray

When the back output tray is pulled down, the printer has a straight paper path from the MP tray through to the back of the printer.

The printer automatically turns on the MP Tray mode when you put paper in the MP tray.

1 Select the **Paper Size**, **Media Type**, **Paper Source**, and other settings in the printer driver.
Media Type: Transparencies
Paper Source: MP Tray

PCL (standard) printer driver

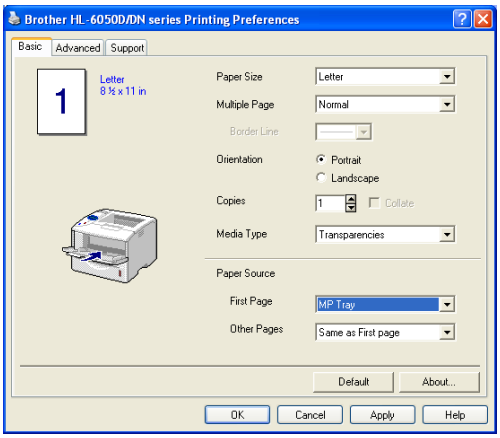

BR-Script printer driver

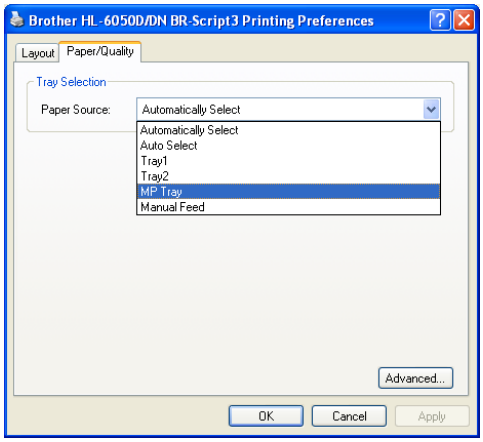

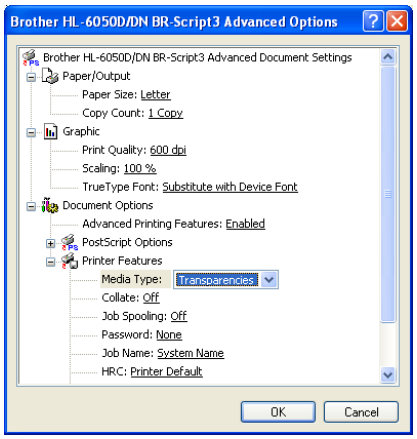

2 Open the back output tray, and then pull out the face up output tray support if necessary.

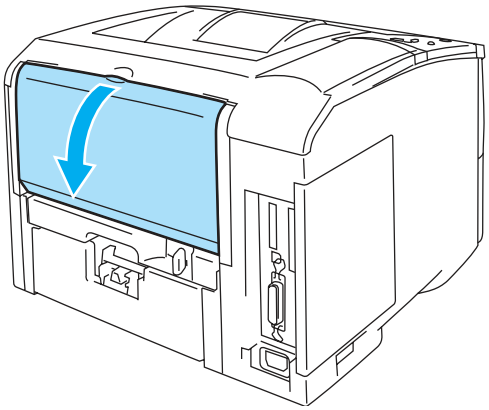

Figure 1-40

3 Open the MP tray and lower it gently.

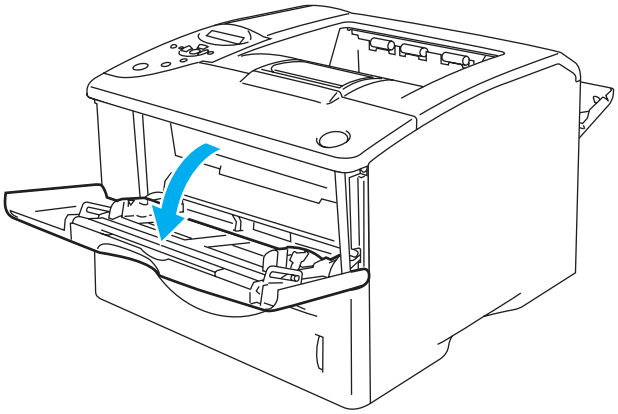

Figure 1-41

4 Pull out the MP tray support flap.

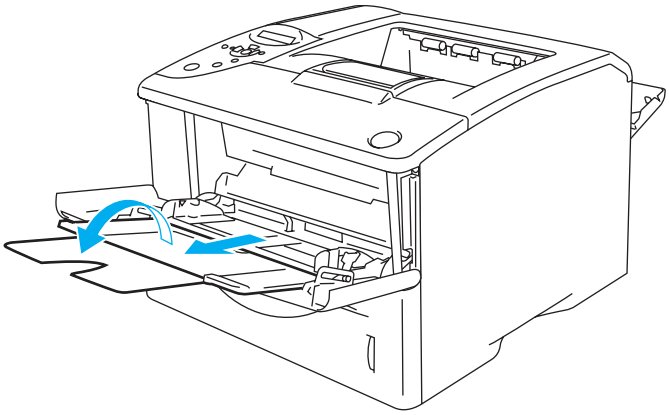

Figure 1-42

5 Put transparencies in the MP tray. Put the side to be printed on first, face up, with the leading edge (top) of the paper in first. Make sure the transparencies touch the back of the tray and remain under the maximum paper height guides on both sides of the tray. Do not put more than 10 transparencies in the MP tray at any one time, or it may cause a jam.

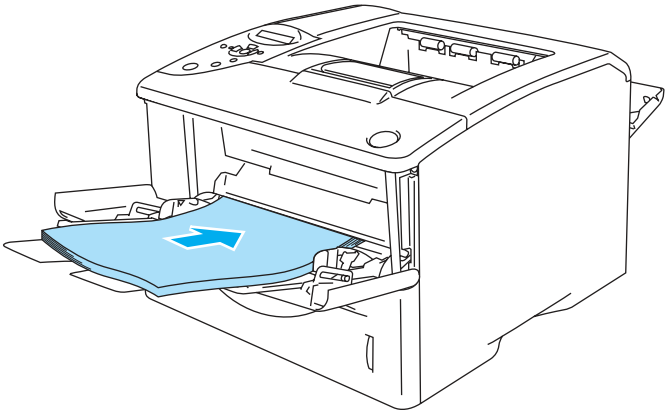

Figure 1-43

Make sure that the transparencies are straight and in the proper position in the MP tray. If they are not, the transparencies may not be fed properly, resulting in a skewed printout or a jam.

6 While pressing the paper guide release lever, slide the paper guide to fit the transparency size.

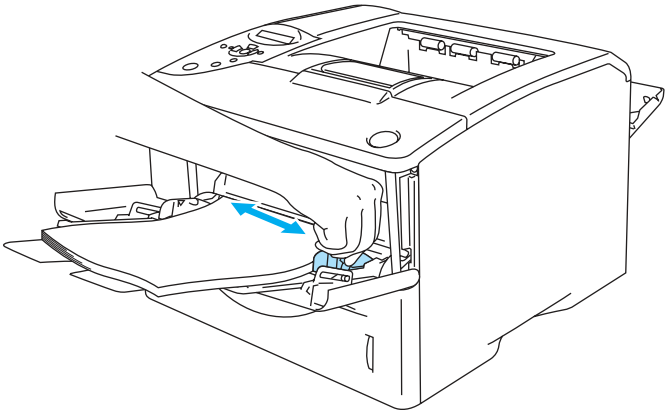

Figure 1-44

When you put transparencies in the MP tray, please remember the following:

- The side to be printed on must be face up.
- Put the leading edge (top of the transparencies) in first and push it gently into the tray.
- The top of the transparency stack must be under the maximum paper height guides that are on both sides of the tray.

7 Send the print data to the printer.

8 After you finish printing, close the back output tray.

Caution

Remove each transparency immediately after printing. Stacking the printed transparencies may cause a paper jam or the transparency to curl.

Printing on both sides of the paper

The supplied printer drivers for Windows® 95/98/Me, Windows NT® 4.0, Windows® 2000/XP, Mac OS® 8.6 to 9.2 and Mac OS® X 10.1/10.2 all enable duplex printing. For more information about how to choose the settings, see the **Help** text in the printer driver.

The BR-Script 3 printer driver (PostScript® 3™ Emulation) does not support manual duplex printing.

Manual duplex printing from the paper tray (For PCL printer driver)

1. Choose the **Manual Duplex** printing mode from the **Advanced** tab, and from the **Basic** tab select the **Paper Source** to be **Tray 1**.
2. The printer will automatically print all the even-numbered pages on one side of the paper first.
3. Remove the printed even numbered pages from the output tray and put them back in the paper tray, placing the paper with the side to be printed on (blank side) face down. Follow the instructions on the computer screen.

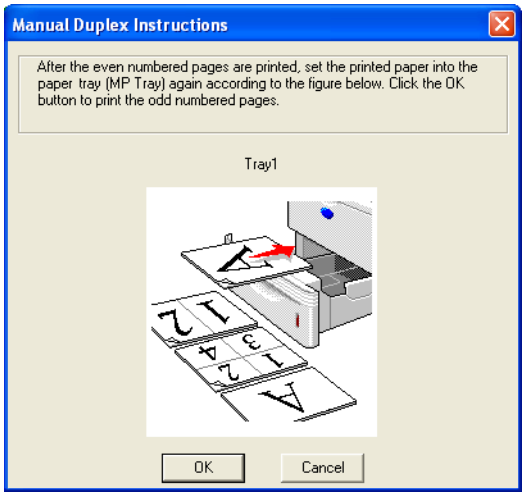

Figure 1-45

If you select the **Paper Source** to be **Auto Select** in Step 1, please put the printed even-numbered pages in the MP tray.

4. The printer will now automatically print all the odd numbered pages on the other side of the paper.

Manual duplex printing from the multi-purpose tray

Caution

- Before putting the sheets back in the MP tray, you will have to straighten them, or you may get paper jams.
- You should not use very thin or very thick paper.
- When you use the manual duplex function, it is possible that there may be paper jams or poor print quality. If there is a paper jam, see *Paper jams and how to clear them* on page 6-5.

1. Open the **Properties** dialog box in the printer driver. Choose the **General** tab and click the **Printing Preferences** icon. Choose the **Manual Duplex** printing mode from the **Advanced** tab, and from the **Basic** tab select the **Paper Source** to be **MP Tray**.
2. Put the paper in the MP tray with the side to be printed on first facing up. Follow the instructions on the computer screen. Repeat this step until you have printed all the even numbered pages.

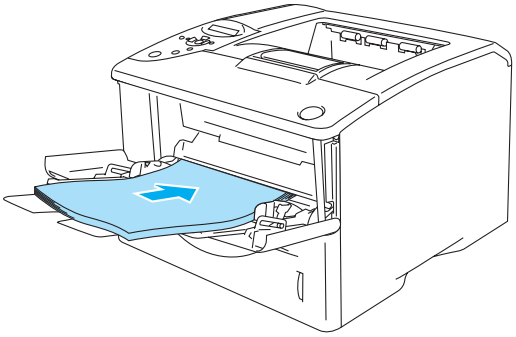

Figure 1-46

3. Remove the printed even-numbered pages from the output tray and put them in the same order back into the MP tray. Place the paper with the side which will be printed on (the blank side) face up. Follow the instructions on the computer screen.

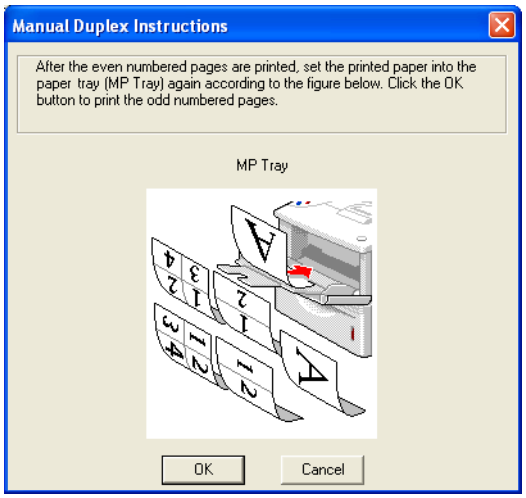

Figure 1-47

4. Repeat Step 3 until you have printed all the odd numbered pages on the other side of the paper.

Automatic duplex printing (available for HL-6050D and HL-6050DN only)

The screens in this section are from Windows® XP. The screens on your PC will vary depending on your operating system.

Caution

Use A4, Letter or Legal size paper when you use automatic duplex printing function.

- Ensure that the back output tray is closed
- Ensure that the duplex tray is installed correctly in the printer.

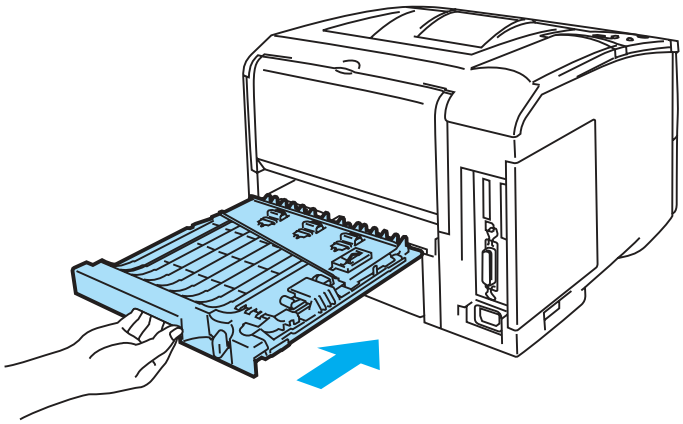

Figure 1-48

1. Put paper in the paper tray or MP tray.
2. Set the paper adjustment lever for duplex printing at the back of the printer to match your paper size.

Letter or Legal size

A4 size

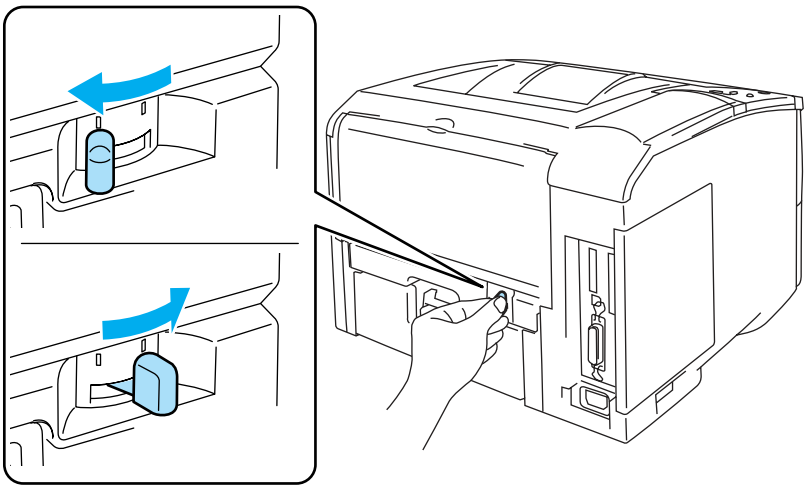

Figure 1-49

If the paper adjustment lever for duplex printing is not correctly set for the paper size, paper jams may occur and the print will be out of position on the paper.

3 For the PCL (standard) printer driver

Open the **Properties** dialog box in the printer driver. Choose the **General** tab and click the **Printing Preferences** icon. Choose the **Duplex** mode in the **Advanced** tab, make sure that **Use Duplex Unit** has been selected, and then click the **OK** button. The printer will print on both sides of the paper automatically.

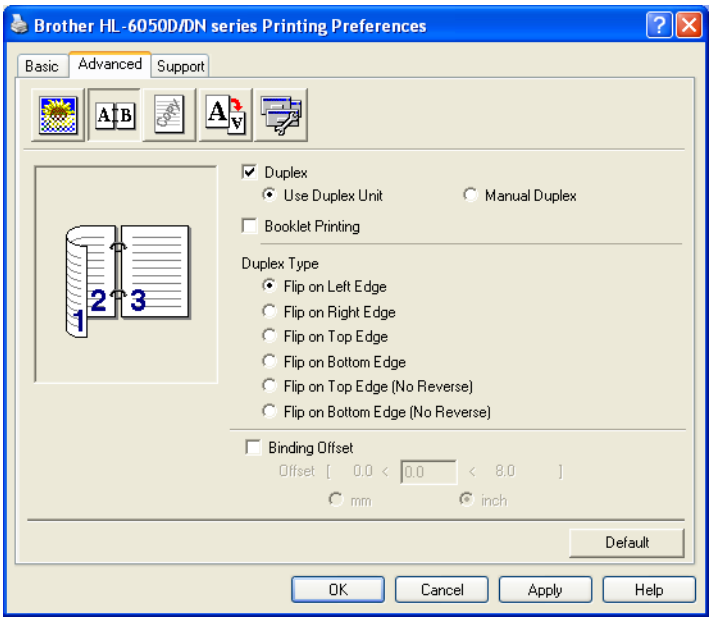

For the BR-Script printer driver

Open the **Properties** dialog box in the printer driver. Choose the **General** tab and click the **Printing Preferences** icon. In the **Layout** tab, select **Orientation**, **Print on Both Sides (Duplex)** and **Page Order**, and then click the **OK** button. The printer will print on both sides of the paper automatically.

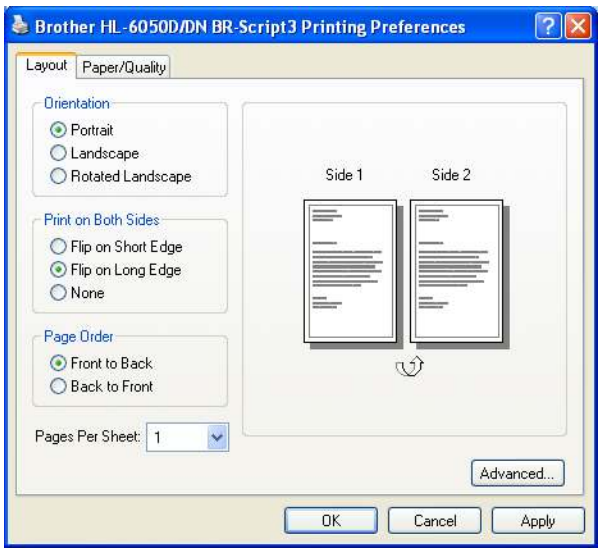

Booklet printing (for the PCL printer driver) (available for HL-6050D and HL-6050DN only)

1 Put paper in the paper tray or MP tray.

2 When you use A4 size or Letter size paper, set the paper adjustment lever for duplex printing to match your paper size.

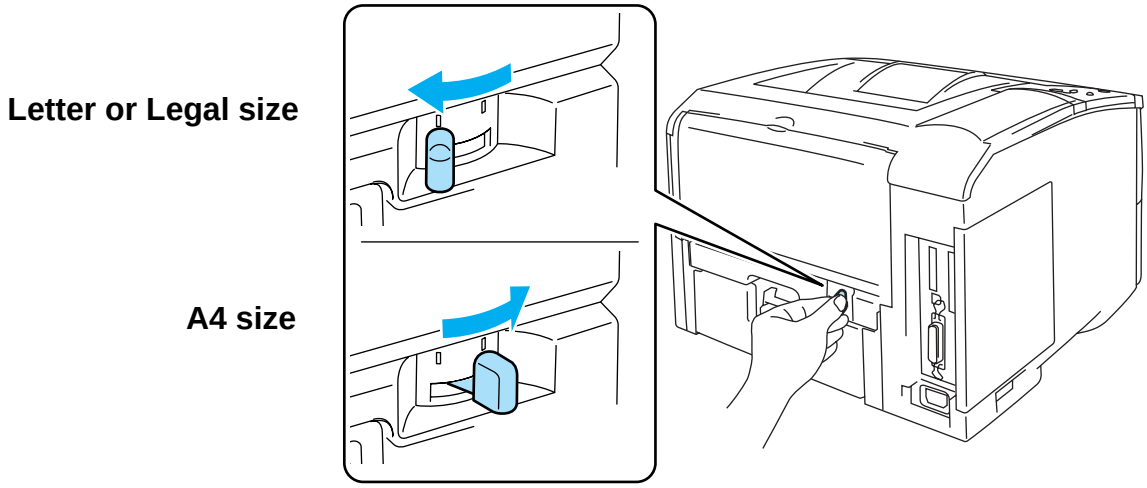

Figure 1-50

If the paper adjustment lever for duplex printing is not correctly set for the paper size you are using, paper jams may occur and the print will be out of position on the paper.

3 Open the **Properties** dialog box in the printer driver. Choose the **General** tab and click the **Printing Preferences** icon. After you click the **Duplex** icon in the **Advanced** tab, check the **Booklet Printing** setting. Select the **Duplex** mode. The printer will print a Booklet automatically.

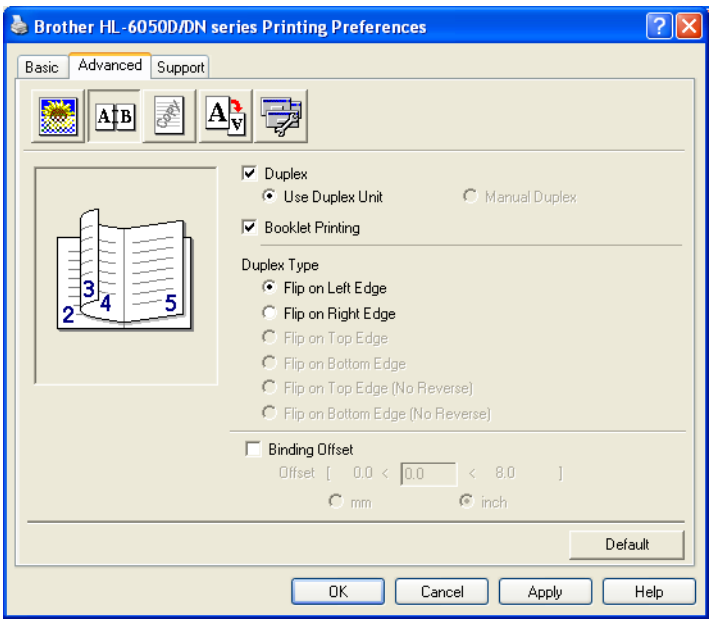

Guidelines for printing on both sides of the paper

- If the paper is thin, it may wrinkle.
- If paper is curled, straighten it and then put it back in the paper tray.
- You should use regular paper. Do not use bond paper.
- If the paper is not feeding properly, it may be curled. Remove the paper and straighten it.
- **(For manual duplex printing)** When you put paper in the paper tray, first empty the tray of any other paper then put the printed page in to the empty tray, with the printed side face up. (Do not add printed pages to the top of a stack of unprinted paper.)

(For manual duplex printing)

For thick paper that has curled once the first side has been printed on, you cannot feed the paper for the second time from the MP tray to allow the other side of the paper to be printed.

At the back of the printer, open the back output tray and push down the two blue tabs one on the left and one on the right hand side (as shown in Figure 1-51). When you have finished printing, close the back output tray to reset the two blue tabs back to their original position.

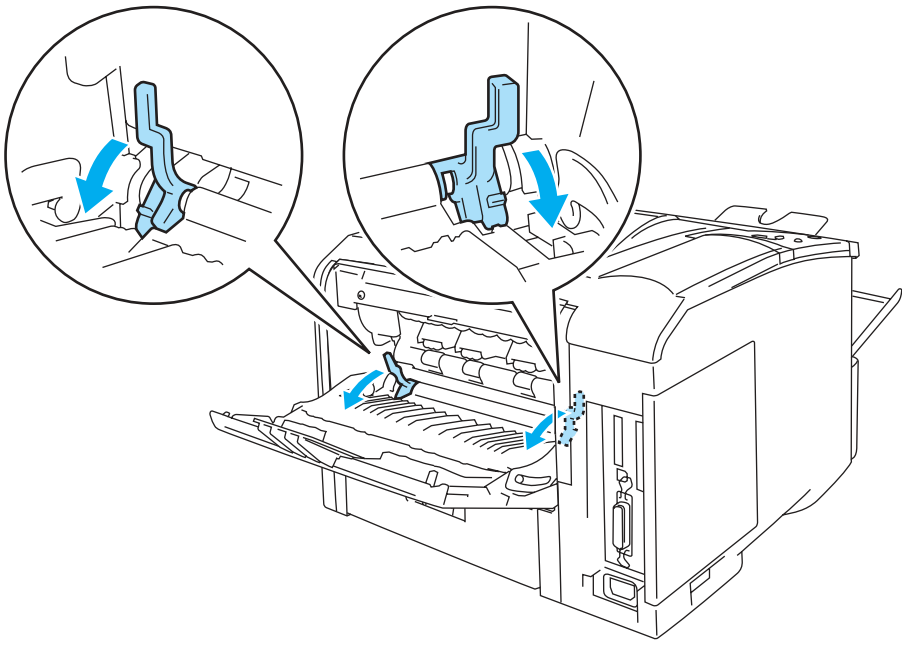

Figure 1-51

Paper orientation for printing on both sides of the paper (for automatic duplex printing)

The printer prints the second page first.
If you print 10 pages on 5 sheets of paper, it will print page 2 then page 1 on the first sheet of paper.
It will print page 4 then page 3 on the second sheet of paper.
It will print page 6 then page 5 on the third sheet of paper, and so on.

When doing automatic duplex printing, the paper must be put in the paper tray in the following way:

- For the paper tray:
  - Put the side to be printed on first, face down, with the leading edge (top) of the paper at the front of the tray.
  - To print the second side, put the paper face up, with the leading edge (top) of the paper at the front of the tray.
  - If letterhead paper is used, this would be put in the paper tray with the heading face up, and at the front of the tray.
  - To print the second page, put the heading face down and at the front of the tray.
- For the MP tray:
  - Put the side to be printed on first, in face up, with the leading edge (top) of the paper in first.
  - To print the second side, put the paper face down, with the leading edge (top) of the paper in first.
  - If letterhead paper is used, this would be put in with the heading face down, and in first.
  - To print the second side, put the heading face up and in first.

Carbon copy printing

Carbon copy printing enables you to automatically print one page data to different styles of paper by changing the paper source. You can make copies as though you are printing on carbon paper using a dot matrix printer. For example, you can print ‘Data A’ to ‘Sheet 1’ which is blue colored paper and then to ‘Sheet 2’ which is yellow colored and has some information already printed. If you put paper for ‘Sheet 1’ in the Tray 1 and paper for ‘Sheet 2’ in the MP tray, the printer will automatically feed paper for ‘Sheet 1’ from the Tray 1 and ‘Sheet 2’ from the MP tray.

For more information, visit http://solutions.brother.com/carboncopy

2 Driver and software

Printer driver

A printer driver is software that translates data from the format used by a computer to the format that a particular printer needs. Typically, this format is a printer command language or page description language.

The printer drivers for the following version of Windows® and Macintosh® are on the CD-ROM that we have supplied. You can also download the latest printer driver for all of the following operating systems from the Brother Solutions Center at http://solutions.brother.com

You can see the operations and detailed information in the **Install Software** section of the supplied CD-ROM.

For Windows®

- PCL (Hewlett-Packard LaserJet laser printer) compatible printer driver (Standard printer driver)
- BR-Script (PostScript® 3™ language emulation) printer driver (PS printer driver)

For Macintosh®

- BR-Script (PostScript® 3™ language emulation) printer driver (PS printer driver)
  For more information, see the Network User's Guide on the CD-ROM.

For Linux

- GDI printer driver
- BR-Script (PostScript® 3™ language emulation) printer driver (PS printer driver)

Operating system	PCL driver	GDI driver	BR-Script driver (PS driver)
Windows® 95/98/Me **Windows® 2000/XP** **Windows NT® 4.0**	ⓘ		ⓘ
Mac OS® 8.6 to 9.2 **Mac OS® X 10.1/10.2**			ⓘ
Linux (Mandrake 9.1, Red Hat 9.0, SuSE Linux 8.2)		ⓘ	ⓘ

For Windows®

Features in the PCL printer driver

You can download the latest printer driver or get other information by accessing the Brother Solutions Center at http://solutions.brother.com

You can also change settings by clicking the illustration on the left side of the **Basic** tab in the **Properties** dialog box.

The screens in this section are based on HL-6050D with Windows® XP. The screens on your PC will vary depending on the printer model and your operating system.

Basic tab

If you are using Windows NT® 4.0, Windows® 2000 or XP, you can access the **Basic** tab by clicking **Printing Preferences...** in the **General** tab of the **Brother HL-6050D/DN series Properties** screen.

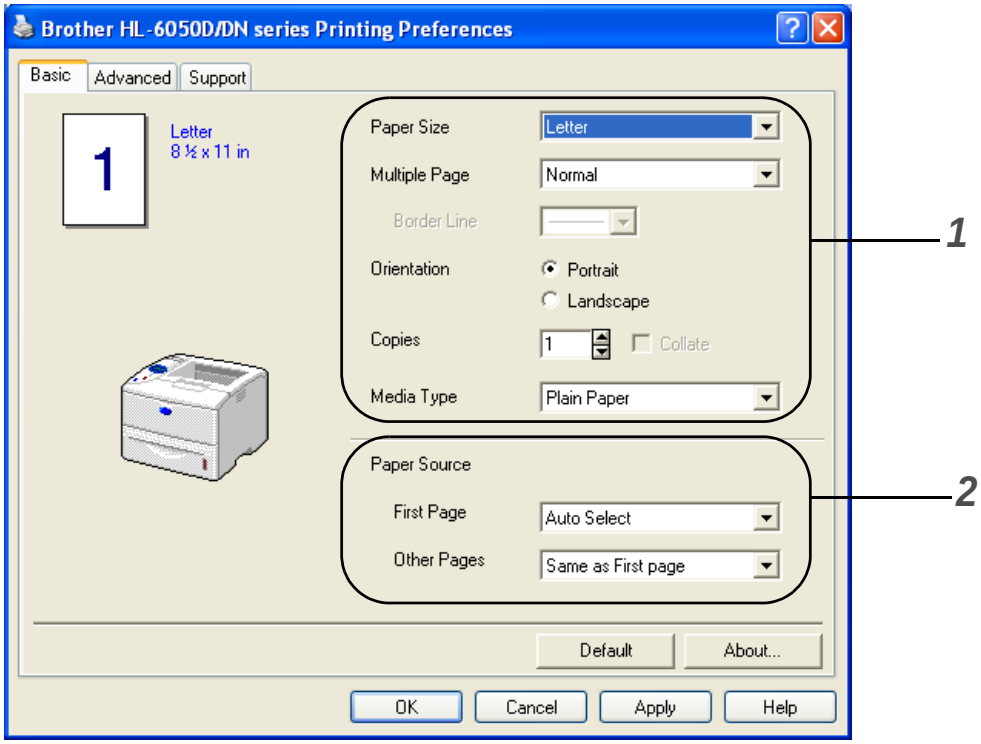

1 Select the **Paper Size**, **Multiple Page**, **Orientation** and other settings.

2 Select the **Paper Source** and other settings.

Advanced tab

If you are using Windows NT® 4.0, Windows® 2000 or XP, you can access the **Advanced** tab by clicking **Printing Preferences...** in the **General** tab of the **Brother HL-6050D/DN series Properties** screen.

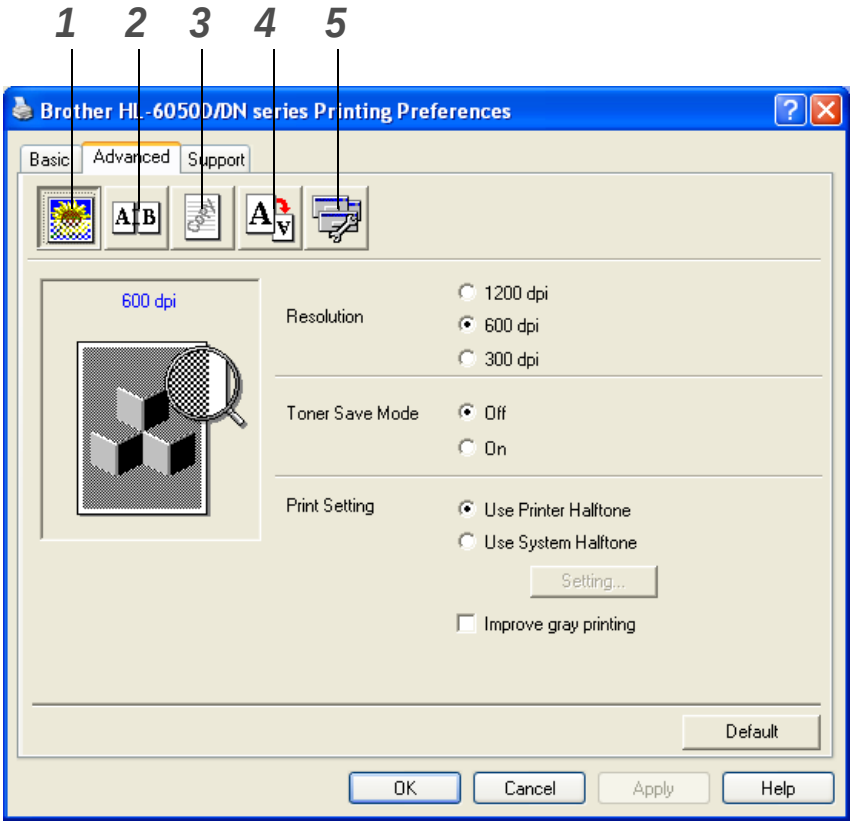

Change the tab settings by clicking the following icons:

1. Print Quality
2. Duplex
3. Watermark
4. Page Setting
5. Device Options

Print Quality

Select the resolution, toner save and print settings, or gray printing setting.

Resolution

You can change the resolution as follows:

- 300 dpi
- 600 dpi
- 1200 dpi

Toner Save Mode

You can save running costs by turning on the **Toner Save Mode**, which reduces the print density.

Print Setting

You can manually change the brightness, contrast and other settings.

- **Improve gray printing (For Windows NT® 4.0, Windows® 2000/XP users only)**

  You can improve the image quality of shaded areas by ticking the **Improve gray printing** check box.

Duplex

If you select the **Duplex** button, the dialog box for making duplex settings will appear. Six types of duplex binding directions are available for each orientation.

Watermark

You can place a watermarked logo or text into your documents.
When you use a bitmap file as a watermark, you can change the size of the watermark and place it anywhere you like on the page.
When you use text as a watermark, you can change the font, darkness and angle settings.

Page Setting

You can change the print image scaling and select **Mirror / Reverse print** options.

Device Options

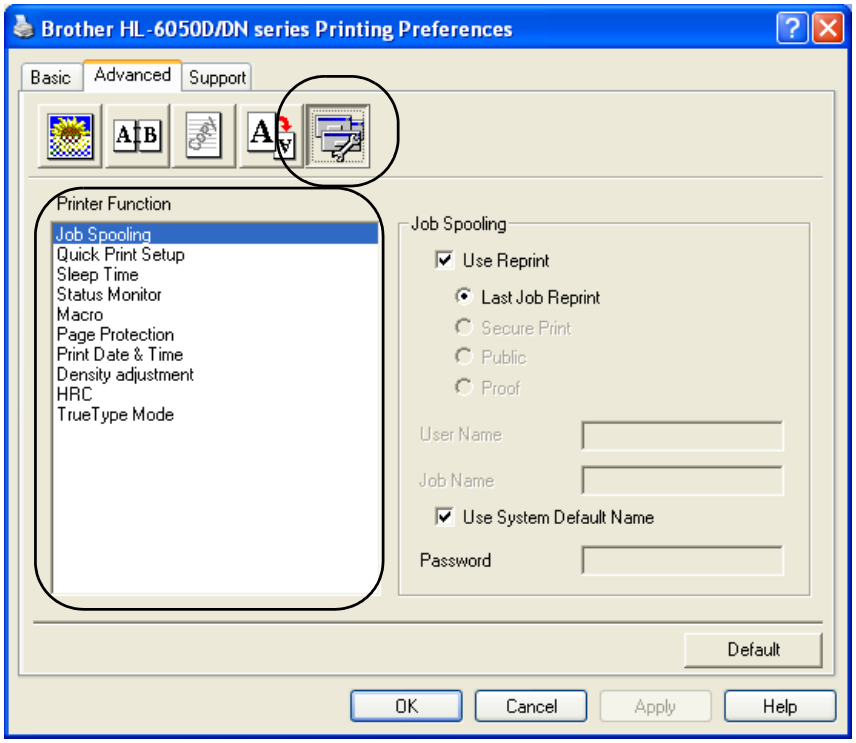

You can set the following **Printer Function** modes in this tab:
(You can jump to the page for each **Printer Function** by clicking the function name in the list below.)

- Job Spooling
- Quick Print Setup
- Sleep Time
- Status Monitor
- Macro
- Page Protection
- Print Date & Time
- Density adjustment
- HRC (High Resolution Control)*
- TrueType Mode*

The **Printer Function** list may differ depending on the model.

** If you are using Windows® 95, 98 or Me, you can change settings of **HRC** and **TrueType Mode** in **Print Setting** in the **Print Quality** option of the **Advanced** tab.*

Job Spooling

The printer saves data that you want reprinted.
You can reprint a document without sending the data again from your PC (except for secure printing).

- Last Job Reprint: Reprint the last job
- Secure Print: Print the data with a password
- Public: Save the data without a password
- Proof: Save the data and print it

For more information about the Reprint function, see *Reprint button* on page 3-3.

If you want to prevent other people from printing your data using the reprint setting, clear the **Use Reprint** check box in the job spooling settings.

Quick Print Setup

You can turn the quick print setup function ON or OFF. A small selection window appears on your computer. This will then let you make changes to the settings of the following functions:

- Multiple Page
- Manual Duplex (For HL-6050)
- Duplex (For HL-6050D and HL-6050DN)
- Toner Save Mode
- Paper Source
- Media Type

Sleep Time

When the printer does not receive data for a certain period of time (timeout), it enters sleep mode. Sleep mode acts as though the printer was turned off. The default timeout is 30 minutes. When **Intelligent Sleep Mode** is selected, it is automatically adjusted to the most suitable time-out setting depending on the frequency of your printer use. While the printer is in sleep mode, the light on the display is off, but the printer can still receive data from the computer. Receiving a print file or document automatically wakes up the printer to start printing. Pressing one of the buttons will also wake up the printer.

Sleep mode can be turned off. To turn sleep mode off, go to the **Advanced** tab, select **Device Options** and then select **Sleep Time**. Double click the word **Sleep Time** in the **Sleep Time** screen, this will allow the **Sleep Time Off** function to appear, click **Sleep Time Off** to stop the printer going into sleep mode. The **Sleep Time Off** function can be hidden by double clicking the word **Sleep Time** in the **Sleep Time** screen again. We recommend that you keep Sleep mode on for power saving.

Status Monitor

This reports the printer status (any errors that may happen with the printer) when printing. The default setting for the Status Monitor is off. If you would like to turn the Status Monitor on, go to the **Advanced** tab, select **Device options** and then select **Status monitor**.

Macro

You can save a page of a document as a macro to printer memory. Moreover, you can execute the saved macro - in other words, you can use the saved macro as an overlay on any documents. This will save time and increase printing speed for often used information such as forms, company logos, letter head formats or invoices.

Page Protection

‘Page Protection’ refers to a setting that reserves additional memory for the creation of full page images. Selections are AUTO, OFF, LTR (Letter size paper), A4 or LGL (Legal size paper).
The page protection feature allows the printer to create the full page image to be printed in memory before physically moving the paper through the printer. When the image is very complicated and the printer has to wait to process the image before printing, use this function.

Print Date & Time

Date: Specifies the format of the date.

Time: Specifies the format of the time.

HRC

This option allows you to change the HRC setting on your Brother HL-6050 series printer. HRC is a special function that offers improved print quality of characters and graphics that conventional laser printers cannot attain with resolutions of 300 or 600 dpi.

- Printer Default: The setting will match that of the printer.
- Light
- Medium
- Dark.
- Off: Turn HRC off

TrueType Mode

TrueType fonts may be sent to your printer in one of the following ways:

- Download as TrueType
- Download as Bit Image
- Print as Graphics

Accessories tab

When you install the optional lower tray unit and other options, you can add it and select its settings in the **Accessories** tab as follows.

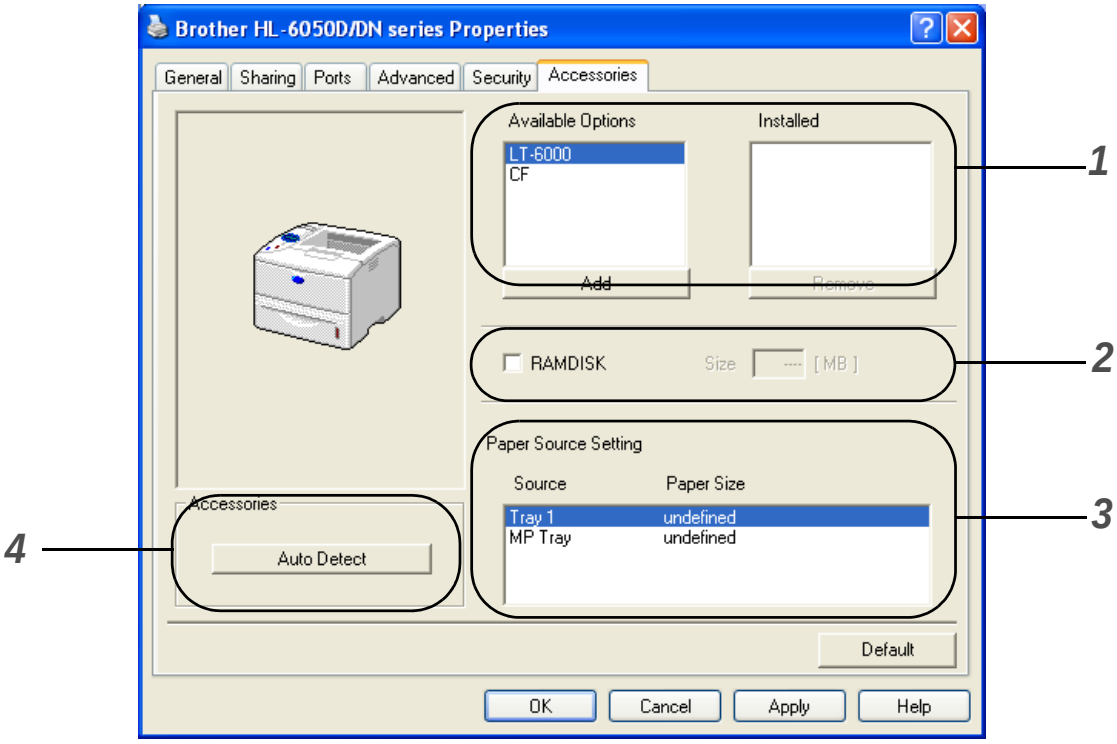

1 You can manually add and remove the options for any optional unit device that is installed on the printer. Tray settings will match the installed options.

2 **RAMDISK**

You can detect the capacity of the RAMDISK that has been set using the control panel. To find the capacity of RAMDISK, click the **RAMDISK** check box and then click **Auto Detect**. For more information, see *Reprinting from RAM* on page 3-3.

3 **Paper Source Setting**

This feature recognizes the paper size in each paper tray.

4 Auto detection of printer options

The **Auto Detect** function finds the currently installed optional unit devices and shows the available settings in the printer driver. When you click the **Auto Detect** button, options that are installed on the printer will be listed. You can manually add or remove options.

Auto Detect function is not available under certain printer conditions.

Support tab

If you are using Windows NT® 4.0, Windows® 2000 or XP, you can access the **Support** tab by clicking **Printing Preferences...** in the **General** tab of the **Brother HL-6050D/DN series Properties** screen.

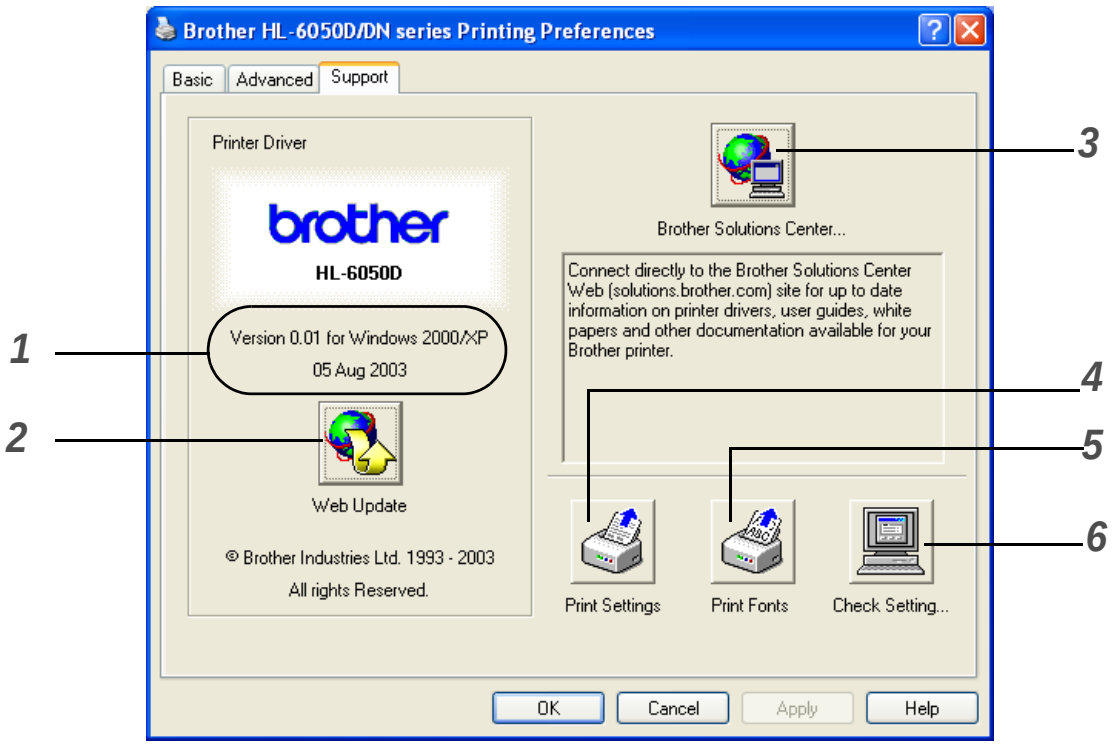

1 Displays the printer driver version.

2 **Web Update**
You can check the brother web site for updated drivers and automatically download and update the driver on your computer.

3 **Brother Solutions Center**
You can download the latest driver or get other information by accessing the Brother Home Page at http://solutions.brother.com

4 **Printer Settings**
You can print the printer settings page and the internal fonts list.

5 **Print Fonts**
You can print the font list of the printer.

6 **Check Setting**
You can check the current driver settings.

Features in the BR-Script printer driver (PS printer driver)

You can download the latest driver by accessing the Brother Solutions Center at http://solutions.brother.com

For more information, please see the **Help** text in the printer driver.

The screens in this section are based on HL-6050D with Windows® XP.
The screens on your PC may vary depending on the printer model and your operating system.

Ports tab

Select the port where your printer is connected or the path to the network printer you are using.

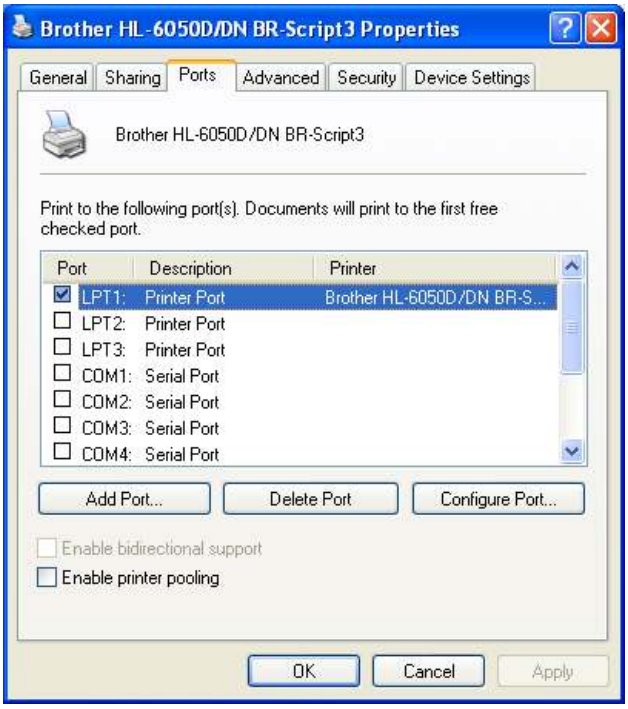

Device Settings tab

Select the options you have installed.

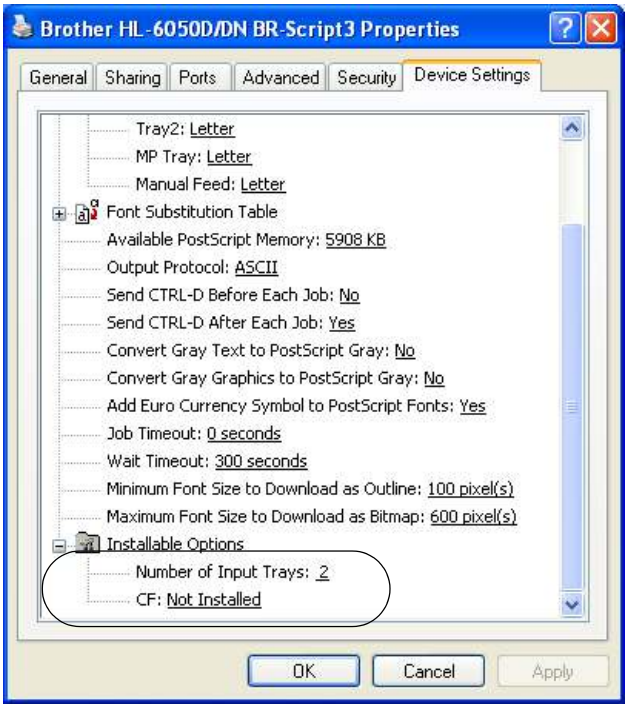

Layout tab

If you are using Windows NT® 4.0, Windows® 2000 or XP, you can access the **Layout** tab by clicking **Printing Preferences...** in the **General** tab of the **Brother HL-6050D/DN BR-Script3 Properties** screen.

You can change the layout setting by selecting the settings for **Orientation**, **Print on Both Sides (Duplex)**, **Page Order** and **Page Per Sheet**.

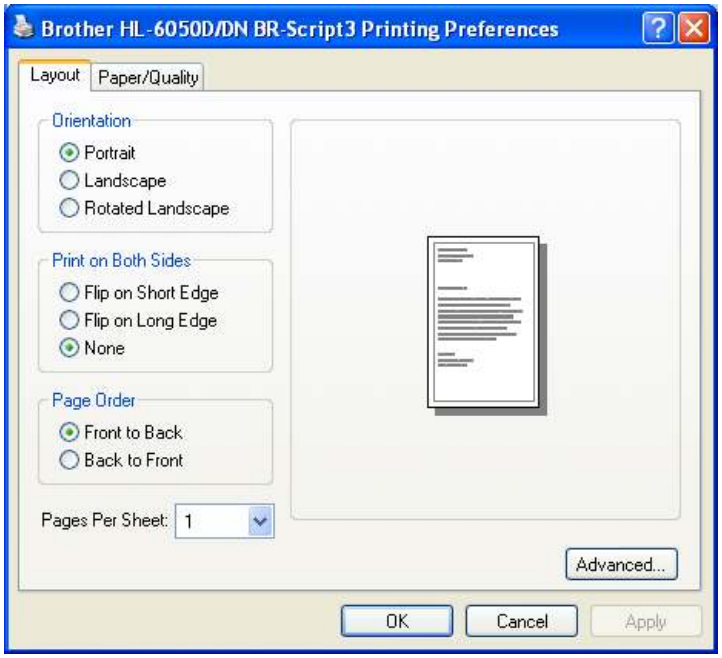

Paper / Quality tab

Select the **Paper Source**.

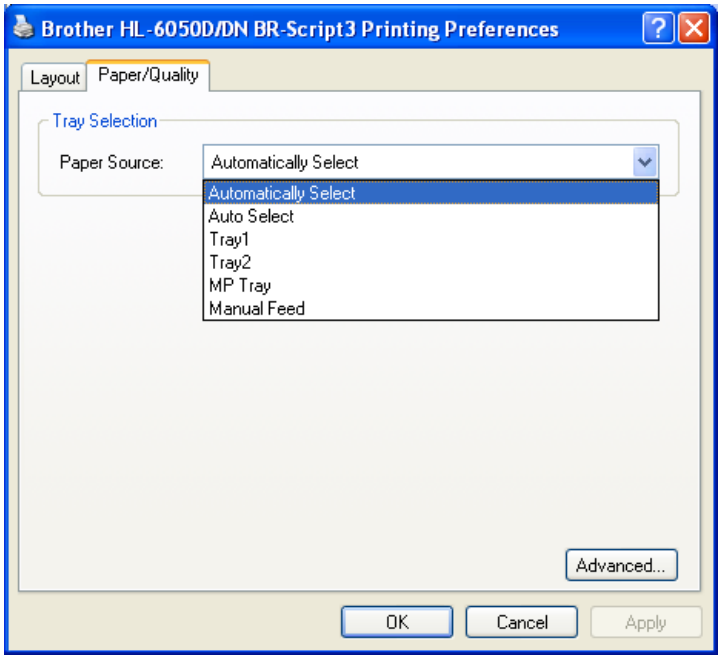

Advanced options

If you are using Windows NT® 4.0, Windows® 2000 or XP, you can access the **Brother HL-6050D/DN BR-Script3 Advanced Options** tab by clicking **Advanced...** button in the **Layout** tab or the **Paper / Quality** tab.

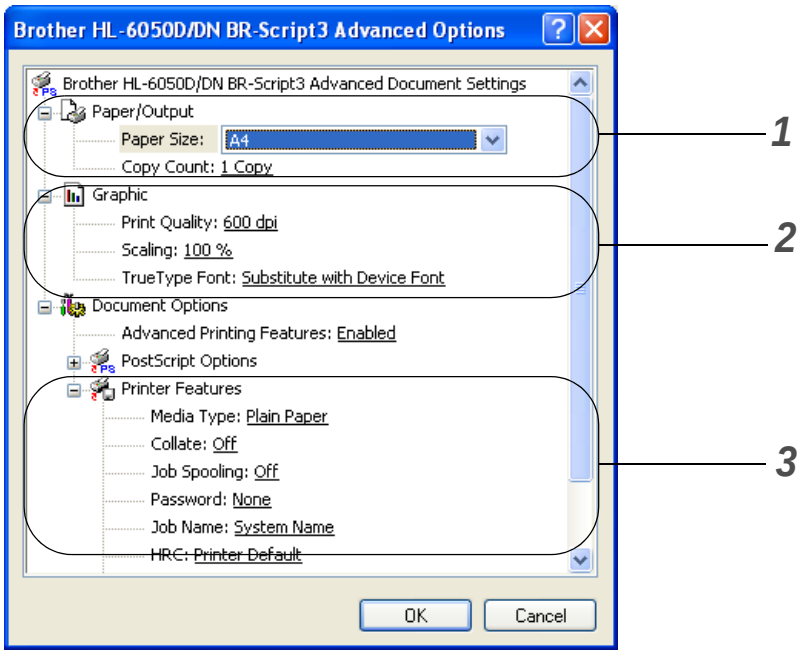

1. Select the **Paper Size** and **Copy Count**.
2. Set the **Print Quality**, **Scaling** and **TrueType Font** settings.
3. You can change settings by selecting the setting in the **Printer Features** list:
   - Media Type
   - HRC
   - Toner Save
   - Sleep Time
   - BR-Script Level

HRC

This option allows you to change the HRC setting on your Brother HL-6050 series printer. HRC is a special function that offers improved print quality of characters and graphics that conventional laser printers cannot attain with resolutions of 300 or 600 dpi.

- Printer Default: The setting will match that of the printer.
- Light
- Medium
- Dark.
- Off: Turn HRC off

Toner Save

You can save running costs by turning on the **Toner Save**, which reduces the print density.

Sleep Time

When the printer does not receive data for a certain period of time (timeout), it enters sleep mode. Sleep mode acts as though the printer was turned off. The default timeout is 30 minutes. When **Intelligent Sleep Mode** is selected, it is automatically adjusted to the most suitable time-out setting depending on the frequency of your printer use. While the printer is in sleep mode, the light on the display is off, but the printer can still receive data from the computer. Receiving a print file or document automatically wakes up the printer to start printing. Pressing one of the buttons will also wake up the printer.

Sleep mode can be turned off. To turn sleep mode off, go to the **Advanced** tab, select **Device Options** and then select **Sleep Time**. Double click the word **Sleep Time** in the **Sleep Time** screen, this will allow the **Sleep Time Off** function to appear, click **Sleep Time Off** to stop the printer going into sleep mode. The **Sleep Time Off** function can be hidden by double clicking the word **Sleep Time** in the **Sleep Time** screen again. We recommend that you keep Sleep mode on for power saving.

For Macintosh®

This printer supports Mac OS® 8.6 to 9.2 and Mac OS® X 10.1, 10.2 or greater.
You can download the latest driver by accessing the Brother Solutions Center at http://solutions.brother.com

The screens in this section are from Mac OS® X 10.1
The screens on your Macintosh® will vary depending on your operating system.

Page setup

You can set the **Paper size**, **Orientation** and **Scale**.

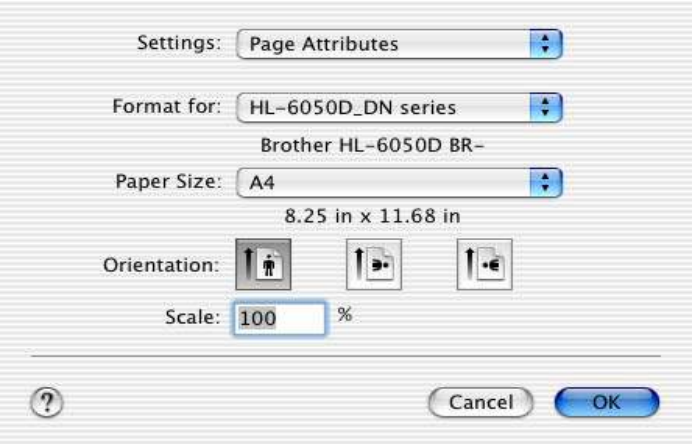

Layout

Set the **Layout**, **Pages per Sheet** and other settings.

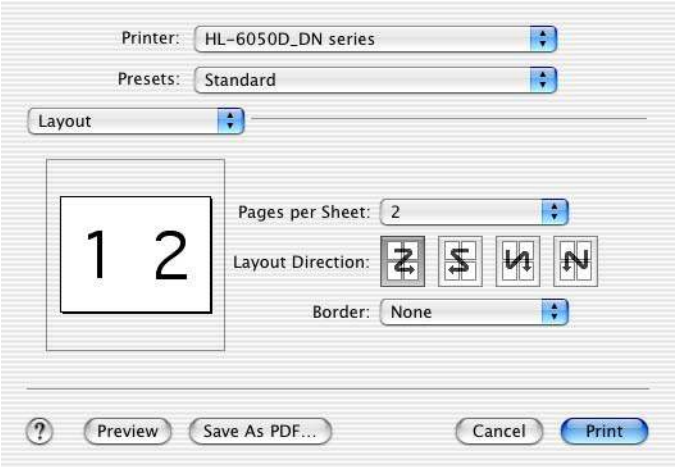

Specific settings

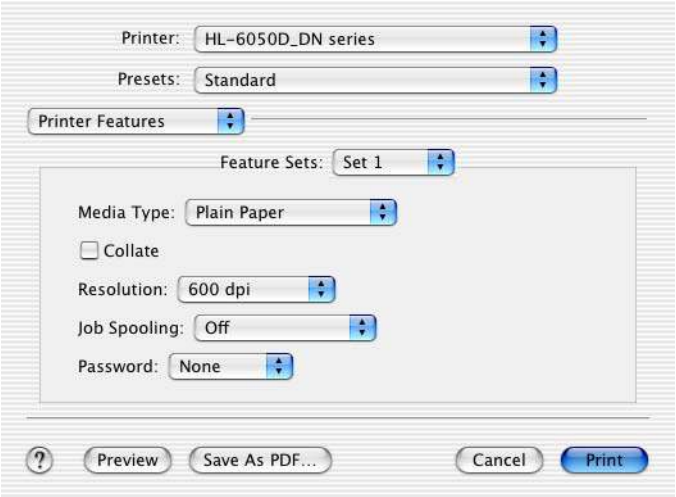

You can change settings by selecting the setting in the **Printer Features** list:

- Media Type
- Resolution
- HRC
- Toner Save
- Sleep Time

Resolution

You can change the resolution as follows:

- 300 dpi
- 600 dpi
- 1200 dpi

HRC

This option allows you to change the HRC setting on your Brother HL-6050 series printer. HRC is a special function that offers improved print quality of characters and graphics that conventional laser printers cannot attain with resolutions of 300 or 600 dpi.

- Printer Default: The setting will match that of the printer.
- Light
- Medium
- Dark.
- Off: Turn HRC off

Toner Save

You can save running costs by turning on the **Toner Save**, which reduces the print density.

Sleep Time

When the printer does not receive data for a certain period of time (timeout), it enters sleep mode. Sleep mode acts as though the printer was turned off. The default timeout is 30 minutes. When **Intelligent Sleep Mode** is selected, it is automatically adjusted to the most suitable time-out setting depending on the frequency of your printer use. While the printer is in sleep mode, the light on the display is off, but the printer can still receive data from the computer. Receiving a print file or document automatically wakes up the printer to start printing. Pressing one of the buttons will also wake up the printer.

Sleep mode can be turned off. To turn sleep mode off, go to the **Advanced** tab, select **Device Options** and then select **Sleep Time**. Double click the word **Sleep Time** in the **Sleep Time** screen, this will allow the **Sleep Time Off** function to appear, click **Sleep Time Off** to stop the printer going into sleep mode. The **Sleep Time Off** function can be hidden by double clicking the word **Sleep Time** in the **Sleep Time** screen again. We recommend that you keep Sleep mode on for power saving.

Software (Windows® users)

Software for Networks

This section is for the HL-6050DN.

BRAdmin Professional

The BRAdmin Professional is a utility for managing your Brother network enabled printers that are running under Windows® 95/98/Me, Windows NT® 4.0 and Windows® 2000/XP.

It allows you to easily configure and check the status of your printer on the network.

Driver Deployment Wizard

This installer includes the Windows® PCL printer driver (standard printer driver) and Brother network port driver (LPR and NetBIOS). The administrator should set up the **IP address**, **Gateway** and **Subnet** with BRAdmin Professional before using this software.

If the administrator then installs the printer driver and port driver using this software, the administrator can save the file to the file server or send the file by email to users. Then, each user just clicks that file to have the printer driver, port driver, IP address, and so on, automatically copied to their PC.

Web BRAdmin

The Web BRAdmin utility is designed to manage all LAN/WAN Brother network connected devices. By installing the Web BRAdmin server utility on a computer running Microsoft IIS (Internet Information Server 4.0/5.0), Administrators with a Web browser can connect to the Web BRAdmin server, which then communicates with the device itself. Unlike the BRAdmin Professional utility - which is designed for Windows® systems only - the Web BRAdmin server utility can be accessed from any client computer with a web browser that supports Java.

You can download the web BRAdmin utility from our web site at http://solutions.brother.com/webbradmin

Web BRAdmin and Internet Information Server 4.0 is supported by the following operating systems:

- Windows NT® 4.0 Server

Web BRAdmin and Internet Information Server 5.0 is supported by the following operating systems:

- Windows® 2000 Professional
- Windows® 2000 Server
- Windows® 2000 Advanced Server
- Windows® XP Professional

Automatic emulation selection

This printer has an automatic emulation selection feature. When the printer receives data from the computer, it automatically chooses the emulation mode. The default factory setting is ON.

The printer can choose from the following combinations:

EPSON (default)	IBM
HP LaserJet	HP LaserJet
BR-Script 3	BR-Script 3
EPSON FX-850	IBM ProPrinter XL

Automatic interface selection

This printer has an automatic interface selection feature. When the printer receives data from the computer, it automatically selects the IEEE 1284 Parallel or the USB interface whichever is appropriate.

When you use the parallel interface, you can turn the high-speed and bi-directional parallel communications on or off by using the control panel buttons to access **PARALLEL** in the **INTERFACE** menu. See *INTERFACE* on page 3-21. Since the default factory setting is ON for the automatic interface selection mode, simply connect the interface cable to the printer. (Note: Always turn off both your computer and printer when connecting or disconnecting the cable).

When you use the automatic interface selection, note the following:

- This function takes a few seconds to work. If you want to speed up printing, select the required interface manually by using the control panel to access **SELECT** in the **INTERFACE** menu.

If you typically use only one interface, we recommend that you select that interface in the **INTERFACE** menu. If only one interface is selected, the printer will allocate the entire input buffer to that interface.

Printer settings

Factory settings

The printer settings have been set at the factory before shipment. They are called factory settings. Although you can operate the printer with these factory settings unchanged, you can tailor the printer with user settings. See *List of factory settings* on page 3-24.

Changing the user settings does not affect the factory settings. You cannot modify the present factory settings.

The changed user settings can be restored to the default factory settings with the **RESET MENU** menu. See *RESET MENU* on page 3-21.

3 Control panel

Control panel

This printer has one liquid crystal display (LCD), seven buttons and one Light Emitting Diode (LED) on the control panel. The display can show various messages with up to 16 characters in one row. The LED lights to indicate the current printer status.

- The control panel with Braille symbols is optionally available in some countries. If you want to buy an optional control panel with Braille symbols, call the dealer you bought the printer from.
- For more information on Braille symbols, see *Braille symbols* on page 3-29.

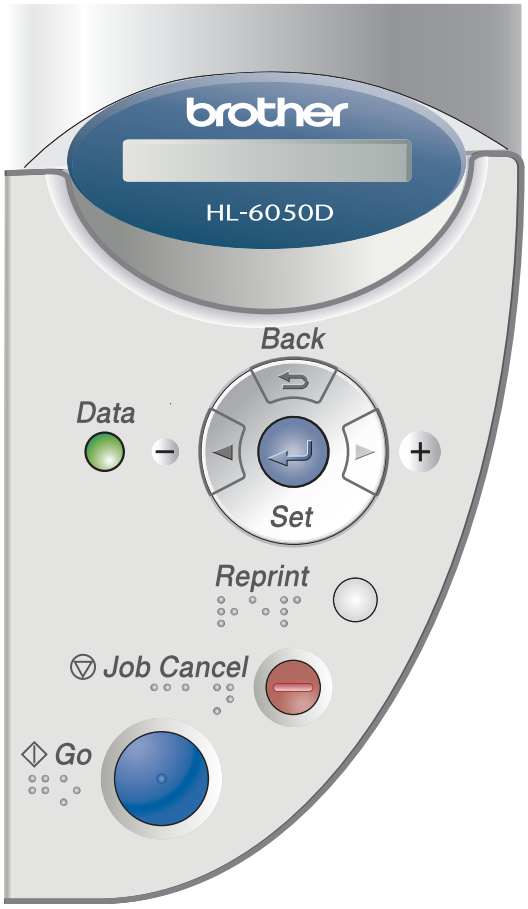

Figure 3-1

Buttons

You can control the basic printer operations and change various printer settings with seven buttons (**Go**, **Job Cancel**, **Reprint**, **+**, **-**, **Back**, **Set**).

Button	Operations
Go	Exit from the control panel menu, reprint settings and error messages. pause and continue printing.
Job Cancel	Stop and cancel the printing job in progress.
Reprint	Select the number of extra copies (1-999).
+	Move forward through menus. Move forward through the available options.
-	Move backward through menus. Move backward through the available options.
Back	Go back one level in the menu.
Set	Select the control panel menu. Set the selected menus and settings.

Go button

You can change the panel indications from the current status (*Menu*, *Error* and *Reprint* settings) by pressing the **Go** button once. For ERROR indications, the control panel only changes when the error is cleared.

You can pause printing with the **Go** button. Pressing the **Go** button again restarts the print job and clears the pause. During a pause, the printer is off line.

If the printer is in PAUSE mode and you do not want to print the data that is left, you can cancel the job by pressing the **Job Cancel** button. Once the job has been cancelled the printer will return to the READY state.

Job Cancel button

You can cancel the processing or printing of data with the **Job Cancel** button. The display shows `JOB CANCELLING` until the job is cancelled. After cancelling the job, the printer returns to the READY state.

When the printer is not receiving data or printing, the display shows `No Data!!!` and you cannot cancel the job.

Reprint button

If you want to reprint a document that has just been printed, you can reprint it by pressing the **Reprint** button. Also, if you have created a document that you wish to share with colleagues, simply spool the document to a non secure area of the printer. This document can then be reprinted by anyone who is on the network or at the printer control panel.

You can use the **Reprint** button when the printer is in READY or PAUSE state.

If you want to print *Proof*, *Public* or *Secure* data, we recommend that you install the optional CompactFlash® card.

Reprinting from RAM

If you do not install a CompactFlash® card (see *CompactFlash® card* on page 4-9), you can reprint from random access memory (RAM). The reprint data in RAM will be deleted when the printer is turned off.

When you use RAM to reprint:

1. Press the **Set** button on the control panel to exit from the READY state and select **RAMDISK SIZE** in the **SETUP** menu.
2. The present RAM disk is 0MB. Press the **+** button to increase the reprint RAM size in increments of 1MB.

- When you increase the RAM size for secure printing, the work area of the printer is decreased and the printer performance will be reduced. Make sure that you reset the RAM disk size to 0MB after you finish using secure printing.
- When you store data in RAM, the data will be deleted when the printer is turned off.

We recommend that you add more RAM if you want to be able to print a lot of secure data. (See *DIMM* on page 4-11).

Reprinting the last job

You can reprint the data from the last print job without sending it from the computer again.

- If **REPRINT** setting is set to OFF on the control panel and you press the **Reprint** button, the LCD shows `NO DATA STORED` for a short time.
- If you want to cancel reprinting, press the **Job Cancel** button.
- If the printer does not have enough memory to spool the print job data, it will only print the last page.
- Pressing the **-** or **+** button makes the number of reprint copies decrease or increase. You can select between 1 and 999 `COPIES`.
- For more information about the settings in the printer driver, see *Device Options* on page 2-5.

Reprint the last job three times

1. Make sure the **REPRINT** setting is `ON` by using the control panel buttons to enter the **SETUP** menu.

If you print with the driver we have supplied with the printer, the settings for **Job Spooling** in the printer driver will take priority over the settings made on the control panel. For more information, see *Device Options* on page 2-5.

2. Press the **Reprint** button.

```
COPIES=    1
```

If you wait too long to continue the control panel button operation, the display leaves the **REPRINT** setting automatically.

Press **+** twice.

```
COPIES=    3
```

Press **Set** or **Reprint**.

```
PRINTING
```

```
COPIES=    1
```

- If you press the **Go** button twice, the printer will leave the **REPRINT** setting.
- If you want to reprint the data and have pressed the **Go** button, the display shows `PRESS SET TO PRINT`. Press the **Set** or **Reprint** button to start reprinting, or press **Go** again to cancel the reprint job.

Printing Proof data

You can use this setting to reprint proof data that has just been printed and has no security settings. Documents that are placed in the proof area are available to anyone. You might use this setting for a document that will be moved to a public folder at a later date.

When the area to spool data is full, the earliest data is automatically deleted first. The order of deleting data is not connected to the order of reprinting.

When you reprint Proof data, see *How to print Secure data* on page 3-6.

- If you have not installed the optional CompactFlash® card, the reprint data will be deleted when the printer is turned off.
- For more information about the settings in the printer driver, see *Device Options* on page 2-5.

Printing Public data

You can use this setting to reprint documents that are stored in a Public area of the printer memory. Documents here will not be protected by a password and anyone can access them using the front panel or a web browser. The printer will not print a Public document when you send it to the printer. You must use the control panel of the printer or connect to the printer through a web browser.

Public data can be deleted using the control panel of the printer or from the web-based management software.

When you reprint PUBLIC data, see *How to print Secure data* on page 3-6.

For more information about the settings in the printer driver, see *Job Spooling* on page 2-6.

Printing Secure data

Secure documents are protected by a password and only those people who know the password will be able to print the document. The printer will not print the document when you send it for printing. To print the document you must use the control panel of the printer (with the password) or connect to the printer using a web browser.

If you want to delete the spooled data, you can carry out this operation using the control panel or the web-based management software.

For more information about the settings in the printer driver, see *Device Options* on page 2-5.

How to print Secure data

Press the **Reprint** button

If there is no data. → `NO DATA STORED`

`LAST JOB`

↓

Press **+** or **-**.

`SECURE FILE` or `PUBLIC FILE` or `PROOF FILE`

↓

Press the **Set** button.

`USER XXXXXX`

↓

Press the **+** or **-** button to select the user name.
Press the **Set** button to set the user name.

`JOB XXXXXX`

↓

Press the **+** or **-** button to select the job.
Press the **Set** button to set the job.

`PASS NO.=0000`

↓

Type your password. *Ignore this step if printing a **Public File**.*
Press the **Set** button to set the password

`COPIES=  1`

The printer will exit this menu after a time-out period.

↓

Press the **Set** button or the **Reprint** button.
If you press the **Go** button, the display shows `PRESS SET TO PRINT`.

`PRINTING`

When there is no reprint data in memory

If the printer does not have reprint data in the memory and you press the **Reprint** button, the LCD shows `NO DATA STORED`.

To cancel the reprint job

Pressing the **Job Cancel** button allows you to cancel the current reprint job. The **Job Cancel** button also allows you to cancel a paused reprint job.

+ or - button

If you press the **+** or **-** button when the printer is online (READY), it goes offline and the LCD displays the menu.

To move through menus on the LCD

If you press the **+** or **-** button when the printer is online (READY), it goes offline and the LCD displays the current mode.

You can go to other menus by pressing the **+** or **-** button. Pressing the **+** or **-** button allows you to move forward or backward through the menus and settings on the display. Press or keep pressing the button until you see the setting you want.

To enter numbers

You can enter numbers in two ways. You can press the **+** or **-** button to move up or down one number at a time, or you can hold down the **+** or **-** button to move faster. When you see the number you want, press the **Set** button.

Back button

If you press the **Back** button when the printer is online (READY), it goes offline and the LCD returns to the menu.

Pressing the **Back** button allows you to return to the previous level from the current menu level.

The **Back** button also allows you to choose the previous digit while setting numbers.

When you select a setting and it does not have an asterisk (**Set** button was not pressed), the **Back** button allows you to return to the previous menu level with the original setting unchanged.

When you press the **Set** button to choose a setting, an asterisk appears briefly at the end of the display. Since the asterisk shows what you have chosen, you can easily see the current settings as you look through the display.

Set button

If you press the **Set** button when the printer is online (READY), it goes offline and the LCD returns to the menu.

Pressing the **Set** button allows you to choose the displayed menu or option. After changing a setting, an asterisk (*****) appears briefly on the right-hand side of the message.

Light-emitting diode (LED)

The LED is a light which shows the printer status.

Data - Orange LED

LED indication	Meaning
On	Data is in the printer memory.
Blinking	Receiving or processing data.
Off	No data left in the memory.

Liquid Crystal Display (LCD)

The display shows the current printer status. When you use the control panel buttons, the display will change.

If there are any problems, the display shows the appropriate error message, maintenance message or call service message so you will know that you need to take action. For more information about these messages, see *LCD messages* on page 6-1.

Back light

Light	Meaning
Off	The printer is power off or in sleep status.
Green (General)	Ready to print Printing Warming Up Job cancelling
Red (Error)	There is a problem with the printer.
Orange (Setting)	The printer is offline. Choosing a menu Setting Reprint times Pause

LCD message

Printer status messages

The following table shows the printer status messages that are displayed during normal operation:

Printer Status Message	Meaning
IGNORE DATA	Printer is ignoring data processed using PS driver.
JOB CANCELLING	Cancelling the job.
NOW INITIALIZING	The printer is setting up.
PAUSE	The printer has suspended its operations. Press the **Go** button to start the printer again.
PRESS SET TO PRINT	Press the **Set** button to start printing.
PRINTING	Printing.
PROCESSING	Busy processing data.
PROGRAMING-WAIT	Accessing CompactFlash® card.
RAM SIZE=XX MB	This printer has XX MB memory.
READY	Ready to print.
RESET TO FACTORY SETTINGS	The printer settings returns to the factory settings.
RESET TO USER SETTINGS	The printer settings returns to the user settings.
RESOLUTION ADAPT	Printing with reduced resolution.
SELF TEST	Performing self-diagnostics.
SLEEP	In Sleep state
WARMING UP	The printer is warming up.

How to use the control panel

When you use the Menu buttons (**+**, **-**, **Set** or **Back**), remember the following basic steps:

- If no control panel operations are performed for 30 seconds, the LCD automatically returns to READY.
- When you press the **Set** button to choose a setting, an asterisk appears at the end of the display for a short time. After that, the display returns to the previous menu level.
- After changing the status or a setting, pressing the **Back** button before you press the **Set** button will cause the display to return to the previous menu level with the original settings unchanged.
- There are two ways to input numbers. You can press **+** or **-** to scroll up or down one number at a time, or you can hold down **+** or **-** to scroll faster. The blinking number is the one that you can change.

For example: If you feed paper from the MP tray as a priority, change the MP FIRST setting to ON as follows.

The default setting is OFF. Turn this setting ON if you want to.

```
READY
```

Press any of the **Menu** buttons (**+**, **-**, **Set** or **Back**) to take the printer offline.

↓

```
INFORMATION
```

Press the **+** or **-** button to move forward or backward through the menus until PAPER is displayed.

↓

```
PAPER
```

Press the **Set** button to move to the next menu level.

↓

```
SOURCE
```

Press the **+** or **-** button.

↓

```
MP FIRST
```

Press the **Set** button.

↓

```
=OFF        *
```

Press the **+** button.

↓

```
=ON
```

Press **Set** button.
An asterisk * briefly appears at the end of the display.
The default setting is indicated by an *

↓

```
=ON         *
```

Control Panel LCD menu

The control panel LCD names for the paper trays are as follows.

- Standard paper tray: TRAY 1
- Multi-purpose tray: MP TRAY
- Optional lower tray: TRAY 2

There are eight menus. For more information about the selections available in each menu, please see the pages listed below.

- **INFORMATION**

See *INFORMATION* on page 3-14.

- **PAPER**

See *PAPER* on page 3-15.

- **QUALITY**

see *QUALITY* on page 3-15.

- **SETUP**

See *SETUP* on page 3-16.

- **PRINT MENU**

See *PRINT MENU* on page 3-17.

- **NETWORK**

See *NETWORK (only on a Network)* on page 3-20.

- **INTERFACE**

See *INTERFACE* on page 3-21.

- **RESET MENU**

See *RESET MENU* on page 3-21.

INFORMATION

Display Shows	Description		
PRINT SETTINGS	Prints the print settings page.		
PRINT TEST	Prints the test page.		
PRINT DEMO	Prints the demonstration sheet.		
PRINT FILE LIST	Prints the list of data saved in the CompactFlash® card or in the embedded memory when the CompactFlash® card has not been installed.		
PRINT FONTS	Prints the font list and samples.		
VERSION	**Subsetting**	**Description**	
	SER.NO=#########	Shows printer serial number.	
	ROM VER=####	Shows ROM version.	
	ROM DATE=##/##/##	Shows ROM date.	
	NET VER=####	Shows network version (only Network users).	
	RAM SIZE=###MB	Shows the size of memory in this printer.	
MAINTENANCE	PAGE COUNTER	=######	Shows the current total printed pages.
	DRUM COUNT	=######	Shows the pages printed with drum unit.
	REMAIN DRUM	=######	Shows the pages left to print with drum unit.
	REMAIN PF KIT MP	=######	Shows the pages left to print with PF kit MP.
	REMAIN PF KIT 1	=######	Shows the pages left to print with PF kit 1.
	REMAIN PF KIT 2	=######	Shows the pages left to print with PF kit 2.
	REMAIN FUSER	=######	Shows the pages left to print with fuser unit.
	REMAIN LASER	=######	Shows the pages left to print with laser unit.

PAPER

Display Shows	Description
SOURCE	=AUTO/MP/TRAY1/TRAY2 Selects which paper tray the paper will be fed from.
PRIORITY	=MP>T1>T2 T1>T2>MP T1>T2
MP FIRST	=ON/OFF Selects whether to feed paper from the MP tray as a priority.
MP SIZE	=ANY/LETTER/LEGAL/A4... Selects the size of paper you loaded in the MP tray, for example, A4/Letter/Legal/...
MANUAL FEED	=OFF/ON Select whether or not you want to feed paper manually.
TRAY1 SIZE	=LETTER/LEGAL/A4... Selects the size of paper you loaded in the standard upper tray, for example, A4/Letter/Legal/...
TRAY2 SIZE	=LETTER/LEGAL/A4... Selects the size of paper you loaded in the optional lower tray, for example, A4/Letter/Legal/...
DUPLEX	=OFF/ON(LONG BIND)/ON(SHORT BIND) Select whether you want to automatically print on both sides of the paper.

QUALITY

Display Shows	Description
RESOLUTION	=300/600/1200 You can select a print resolution of 300, 600 or 1200 dpi (dots per inch).
HRC	=MEDIUM/DARK/OFF/LIGHT HRC: High Resolution Control (HRC) offers improved print quality of letters, numbers and graphics that conventional laser printers cannot achieve, with a resolution of 300 or 600 dpi.
TONER SAVE	=OFF/ON
DENSITY	=-6, -5, -4, -3, -2, -1, 0, 1, 2, 3, 4, 5, 6 Increases or decreases the print density.

SETUP

Display Shows	Description	
LANGUAGE	= ENGLISH /FRANÇAIS /...	
PANEL CONTROL	**Subsetting**	**Description**
	LCD DENSITY	=0/1/2
	AUTO ONLINE	=ON/OFF
	BUTTON REPEAT	Sets the time for the display message to change when holding the + or - button at intervals of: 0.1, 0.2, 0.3, 0.4, 0.5, 1.0, 1.5 or 2.0 seconds. The factory setting is 0.1.
	MESSAGE SCROLL	Sets the time in seconds that an LCD message will scroll across the display. From Level 1=0.2 to Level 10=2.0. The factory setting is Level 1.
ERROR BUZZER	OFF	
	NORMAL	There will be a set of five Buzzes when an error occurs.
	SPECIAL	Buzzes five times consecutively until the error is cleared.
PANEL BUZZER	OFF	Disables buzz function when you press the button.
	ON	Enables buzz function when you press the button.
BUZZER VOLUME	LOW	Makes the buzz lower.
	HIGH	Makes the buzz higher.
POWER SAVE TIME	=1, 2, 3, 4, 5 ... 240 MIN	
AUTO CONTINUE	=OFF/ON	
LOCK PANEL	=OFF/ON Turns the lock panel settings ON or OFF.	
	PASS NO.=###	
REPRINT	=ON/OFF	
PAGE PROTECTION	PROTECT = AUTO	AUTO, OFF, LETTER, A4,LEGAL
EMULATION	=AUTO (EPSON)/AUTO (IBM)/HP LASER JET/....	
KEEP PCL	=OFF/ON	
RAMDISK SIZE	=0, 1, 2 ... MB	RESTART PRINTER?
DELETE STORAGE	Deletes the data in CompactFlash® card.	
	Subsetting	**Description**
	SECURE FILE	Selects the user name, job name and password.
	PUBLIC FILE	Selects the user name and job name.
	PROOF FILE	Selects the user name and job name.
	DATA ID (CF)	=####
	MACRO ID (CF)	=####
	FONT ID (CF)	=####
	FORMAT (CF)	OK?
	DATA ID (ROM)	=####
	MACRO ID (ROM)	=####
	FONT IT (ROM)	=####
	FORMAT (ROM)	OK?

PRINT MENU

Display Shows	Description	
MEDIA TYPE	=PLAIN PAPER, TRANSPARENCIES, THICK PAPER, THICKER PAPER, THIN PAPER, BOND PAPER, ENVELOPES, ENV.THIN, RECYCLED PAPER	
PAPER	Sets the paper size to LETTER, A4, LEGAL, FOLIO, EXECUTIVE, COM-10, MONARCH, C5, DL, DLL, B5, A5, A6, B6, JIS B5, A4 LONG, POST CARD, ORGANIZER J, ORGANIZER K, ORGANIZER L, ORGANIZER M	
COPIES	You can check the total number of printed pages.	
	Shows the number of printed pages (1 to 999).	
ORIENTATION	This printer can print pages in portrait or landscape orientation.	
	PORTRAIT or LANDSCAPE	
PRINT POSITION	This printer can be adjusted to align the page format.	
	Subsetting	**Description**
	X OFFSET=0	=-500, -499 ... + 499, +500 Moves the print start position (at the top-left corner of pages) horizontally up to -500 (left) to +500 (right) dots in 300 dpi.
	Y OFFSET=0	=-500, -499 ... + 499, +500 Moves the print start position (at the top-left corner of pages) vertically up to -500 (up) to +500 (down) dots in 300 dpi.
AUTO FF TIME	=OFF/1, 2, 3 ... 99 (sec) Allows you to print the remaining data without pressing the **Go** button.	
FF SUPPRESS	=OFF/ON Turns the feed suppress (PAUSE) setting ON or OFF.	
HP LASERJET	**Subsetting**	**Description**
	FONT NO.	=I000 ... ####
	FONT PITCH/POINT	=##.##
	SYMBOL SET	PC-8/... Sets the symbol set or the character set.
	TABLE PRINT	Prints code table.
	AUTO LF	=OFF/ON ON: CR →CR+LF, OFF: CR →CR
	AUTO CR	=OFF/ON ON: LF LF+CR, FF+CR, or VT →VT+CR OFF: LF →LF, FF →FF, or VT →VT
	AUTO WRAP	=OFF/ON Selects whether a line feed and carriage return will happen when the printer reaches the right margin.
	AUTO SKIP	=ON/OFF Selects whether a line feed and carriage return will happen when the printer position reaches the bottom margin.
	LEFT MARGIN	=## Sets the left margin at column 0 to 70 columns at 10 cpi.

PRINT MENU (Continued)

Display Shows	Description	
HP LASERJET (continued)	**Subsetting**	**Description**
	RIGHT MARGIN	=## Sets the right margin at column 10 to 80 columns at 10 cpi.
	TOP MARGIN	=#.## Sets the top margin at a distance from the top edge of the paper: 0, 0.33, 0.5, 1.0, 1.5 or 2.0. The factory setting is 0.5.
	BOTTOM MARGIN	=#.## Sets the bottom margin at a distance from the bottom edge of the paper - 0, 0.33, 0.5, 1.0, 1.5 or 2.0. The factory setting is 0.33(None-HP), 0.5(HP).
	LINES	=### Sets the number of lines on each page from 5 to 128 lines.
EPSON FX-850	FONT NO.	=I000 ... ####
	FONT PITCH/POINT	=##.##
	CHARACTER SET	PC-8/... Sets the symbol set or the character set.
	TABLE PRINT	Prints code table.
	AUTO LF	=OFF/ON ON: CR →CR+LF OFF: CR →CR
	AUTO MASK	=OFF/ON
	LEFT MARGIN	Sets the left margin at column 0 to 70 columns at 10 cpi.
	RIGHT MARGIN	Sets the right margin at column 10 to 80 columns at 10 cpi.
	TOP MARGIN	Sets the top margin at a distance from the top edge of the paper - 0, 0.33, 0.5, 1.0, 1.5 or 2.0. The factory setting is 0.33.
	BOTTOM MARGIN	Sets the bottom margin at a distance from the bottom edge of the paper - 0, 0.33, 0.5, 1.0, 1.5 or 2.0. The factory setting is 0.33.
	LINES	Sets the number of lines on each page from 5 to 128 lines.

PRINT MENU (Continued)

Display Shows	Description	
IBM PROPRINTER	**Subsetting**	**Description**
	FONT NO.	=I000 ... ####
	FONT PITCH	=##.##
	CHARACTER SET	PC-8/... Sets the symbol set or the character set.
	TABLE PRINT	Prints code table.
	AUTO LF	=OFF/ON ON: CR →CR+LF, OFF: CR →CR
	AUTO CR	=OFF/ON
	AUTO MASK	=OFF/ON
	LEFT MARGIN	Sets the left margin at column 0 to 70 columns at 10 cpi.
	RIGHT MARGIN	Sets the right margin at column 10 to 80 columns at 10 cpi.
	TOP MARGIN	Sets the top margin at a distance from the top edge of the paper - 0, 0.33, 0.5, 1.0, 1.5 or 2.0. The factory setting is 0.33.
	BOTTOM MARGIN	Sets the bottom margin at a distance from the bottom edge of the paper - 0, 0.33, 0.5, 1.0, 1.5 or 2.0. The factory setting is 0.33.
	LINES	Sets the number of lines on each page from 5 to 128 lines.
BR-SCRIPT3	ERROR PRINT	=OFF/ON
CARBON MENU	CARBON COPY	OFF/ON/AUTO/PARALLEL
	COPIES	=1 to 8
	COPY 1 TRAY	=AUTO/REMAINING, MP TRAY, TRAY1, TRAY2
	COPY 1 MACRO	=(ID number)
	COPY 2 TRAY ⋮ COPY 8 TRAY	=AUTO/REMAINING, MP TRAY1, TRAY2 Appears when printing 2 pages or more.
	COPY 2 MACRO ⋮ COPY 8 MACRO	=(ID number) Appears when printing 2 pages or more.

NETWORK (only on a Network)

Display Shows	Description	
TCP/IP	**Subsetting**	**Description**
	TCP/IP ENABLE	=ON/OFF
	IP ADDRESS=	###.###.###.###
	SUBNET MASK=	###.###.###.###
	GATEWAY=	###.###.###.###
	IP BOOT TRIES	=#
	IP METHOD	=AUTO, STATIC, RARP, BOOTP, DHCP
	APIPA	=ON/OFF
NETWARE	NETWARE ENABLE	=ON/OFF
	NET FRAME	=AUTO, 8023, ENET, 8022, SNAP
APPLETALK	=ON/OFF	
NETBEUI	=ON/OFF	
DLC/LLC	=ON/OFF	
NETBIOS/IP	=ON/OFF	
ENET	=AUTO, 100B-FD, 100B-HD, 10B-FD, 10B-HD	

INTERFACE

Display Shows	Description	
SELECT	=AUTO/PARALLEL/USB/NETWORK	
AUTO IF TIME	= 1, 2, 3 ... 99 (sec) You need to set the time-out period for the auto interface selection.	
INPUT BUFFER	= Level1, 2, 3 ... 15 Increases or decreases the input buffer capacity.	RESTART PRINTER?
PARALLEL	When using the parallel interface	
	Sub-setting Menu	**Description**
	HIGH SPEED	=ON/OFF Turns high-speed parallel communications ON or OFF.
	BI-DIR	=ON/OFF Turns bi-directional parallel communications ON or OFF.
	INPUT PRIME	=ON/OFF Turns prime signal ON or OFF.
USB 2.0	HIGH SPEED	=ON/OFF Turns High-Speed USB 2.0 communications ON or OFF.

RESET MENU

Display Shows	Description
RESET PRINTER	Resets the printer and restores all printer settings (including command settings) to settings you have previously made with the control panel buttons.
FACTORY RESET	Resets the printer and restores all printer settings (including command settings) to the factory settings. See *List of factory settings* on page 3-24.

Set IP Address

```
INFORMATION
```

Press the **+** or **-** button until `NETWORK` appears (and to display each setting shown below).

```
NETWORK
```

Press the **Set** button.

```
TCP/IP
```

Press the **Set** button.

```
TCP/IP ENABLE
```

Press the **+** button.

```
IP ADDRESS=
```

Press the **Set** button.

```
192.0.0.192*
```

The last digit in the first part of the number is blinking.
Press the **+** or **-** button to increase or decrease the number.
Press the **Set** button to go to the next number.

```
123.0.0.192*
```

Repeat this process until you have set your IP address.

```
123.45.67.89
```

Press the **Set** button to complete the IP address.

```
123.45.67.89*
```

An asterisk appears at the end of the display.

About emulation modes

This printer has the following emulation modes.

HP LaserJet Mode

The HP LaserJet mode (or HP mode) is the emulation mode in which this printer supports the PCL6 language of the Hewlett-Packard LaserJet laser printer. Many software applications support this type of laser printer. Using this mode will allow your printer to operate at its best with those applications.

BR-Script 3 Mode

BR-Script is an original Brother page description language and a PostScript® language emulation interpreter. This printer supports level 3. The BR-Script interpreter of this printer allows you to control text and graphics on pages.

For technical information about PostScript® commands, see the following manuals:

- Adobe Systems Incorporated. PostScript® Language Reference, third Edition. Addison-Wesley Publishing Company, Inc., 1999. ISBN: 0-201-37922-8
- Adobe Systems Incorporated. PostScript® Language Program Design. Addison-Wesley Publishing Company, Inc., 1988. ISBN: 0-201-14396-8
- Adobe Systems Incorporated. PostScript® Language Tutorial and Cookbook. Addison-Wesley Publishing Company, Inc., 1985. ISBN: 0-201-10179-3

EPSON FX-850 and IBM Proprinter XL Mode

The EPSON FX-850 and IBM Proprinter XL modes are the emulation modes that this printer supports to meet the industry-standard for dot matrix printers. Some applications support these dot matrix printer emulations. Use these emulation modes so your printer will work well when printing from those types of applications.

List of factory settings

Table 3-1 shows the factory settings.

- The emulation mode affects the setting. Effective modes are shown in brackets in the following table.
- The following settings cannot be restored to the factory settings with **FACTORY RESET** in the **RESET MENU** menu: **INTERFACE** menu, **HRC**, **PAGE PROTECTION**, **SCALABLE FONT**, **LOCK PANEL**, page counter and local language for display messages.
- The **COPY** setting is always restored to the factory setting when the printer is turned off and on again.

Network factory default setting

If you wish to reset the print server back to its default factory settings (resetting all information such as the password and IP address information), hold down the network test button on the network board (NC-6100h) for more than 5 seconds.

Table 3 - 1: List of factory settings

Display Shows	Submenu	Factory setting	
PAPER	SOURCE	=AUTO	
	PRIORITY	=MP>T1>T2	
	MP FIRST	=OFF	
	MP SIZE	=ANY	
	MANUAL FEED	=OFF	
	TRAY1 SIZE	=DETECT SENSOR	
	TRAY2 SIZE	=DETECT SENSOR	
	DUPLEX	=OFF	
QUALITY	RESOLUTION	=600	
	HRC	=MEDIUM	
	TONER SAVE	=OFF	
	DENSITY	0	
SETUP	LANGUAGE	=ENGLISH	
	PANEL CONTROL	**Subsetting**	**Factory setting**
		LCD DENSITY	=0
		AUTO ONLINE	=ON
		BUTTON REPEAT	=0.1 SEC
		MESSAGE SCROLL	LEVEL 1
	ERROR BUZZER	=OFF	
	PANEL BUZZER	=OFF	
	BUZZER VOLUME	=LOW	
	POWER SAVE TIME	=30 MIN	
	AUTO CONTINUE	=OFF	
	LOCK PANEL	=OFF	
	REPRINT	=ON	
	PAGE PROTECTION	=AUTO	
	EMULATION	=AUTO(EPSON)	
	KEEP PCL	=OFF	
	RAMDISK SIZE	=0MB	
PRINT MENU	MEDIA TYPE	=PLAIN PAPER	
	PAPER	=A4/LETTER	
	COPIES	=1	
	ORIENTATION	=PORTRAIT	
	PRINT POSITION	**Subsetting**	**Factory setting**
		X OFFSET	=0
		Y OFFSET	=0
	AUTO FF TIME	=0	
	FF SUPPRESS	=OFF	

Table 3 - 1: List of factory settings (Continued)

Display Shows	Submenu	Factory setting	
PRINT MENU (continued)	HP LASERJET	**Subsetting**	**Factory setting**
		FONT NO.	=59
		FONT PITCH	=10.00/12.00
		SYMBOLSET	=PC8
		AUTO LF	=OFF
		AUTO CR	=OFF
		AUTO WRAP	=OFF
		AUTO SKIP	=ON
		LEFT MARGIN	=####
		RIGHT MARGIN	=####
		TOP MARGIN	=####
		BOTTOM MARGIN	=####
		LINES	=####
	EPSON FX-850	FONT NO.	=59
		FONT PITCH	=10.00/12.00
		SYMBOLSET	=US ASCII
		AUTO LF	=OFF
		AUTO MASK	=OFF
		LEFT MARGIN	=####
		RIGHT MARGIN	=####
		TOP MARGIN	=####
		BOTTOM MARGIN	=####
		LINES	=####
	IBM PROPRINTER	FONT NO.	=59
		FONT PITCH	=10.00/12.00
		SYMBOLSET	=PC8
		AUTO LF	=OFF
		AUTO CR	=OFF
		LEFT MARGIN	=####
		RIGHT MARGIN	=####
		TOP MARGIN	=####
		BOTTOM MARGIN=	####
		LINES	=####
	BR-SCRIPT	ERROR PRINT	=OFF
	CARBON MENU	CARBON COPY	=OFF

Table 3 - 1: List of factory settings (Continued)

Display Shows	Submenu	Factory setting	
NETWORK	TCP/IP	**Subsetting**	**Factory setting**
		TCP/IP ENABLE	=ON
		IP ADDRESS	=169.254.###.### *1
		SUBNET MASK	=255.255.0.0 *1
		GATEWAY	=0.0.0.0
		IP BOOT TRIES	=3
		IP METHOD	=AUTO
		APIPA	=ON
	NETWARE	NETWARE ENABLE	=ON
		NET FRAME	=AUTO
	APPLETALK	=ON	
	NETBEUI	=ON	
	DLC/LLC	=ON	
	NETBIOS/IP	=ON	
	ENET	=AUTO	
INTERFACE	SELECT	=AUTO	
	AUTO IF TIME	=5	
	INPUT BUFFER	=LEVEL 3	
	PARALLEL	**Subsetting**	**Factory setting**
		HIGH SPEED	=ON
		BI-DIR	=ON
		INPUT PRIME	=OFF
	USB 2.0	HIGH SPEED	=ON

*1 Automatic Private IP Addressing (APIPA) protocol automatically configures an IP address and subnet mask. For more details, see the Network User's Guide, which is provided on the CD-ROM.

For visually-impaired users

Buzzer indications

The control panel has a buzzer. The buzzer will sound when one of the control panel buttons is pressed, or the status of the printer changes. See the table for a description of the buzzer meanings.

Table 3 - 2: Buzzer indications list

Buzz indications	Conditions
A short buzz	■ When you enter any information using the button.
Two short buzzes	■ When you come back to the top menu option after you move forward or backward through the menus. ■ When you move to another menu level.
Five short buzzes	■ When an error occurs.
A long buzz	■ When you set any optional menu setting.
Two long buzzes	■ When the printer comes online. ■ When the printer is in the READY status after a warming up condition.
A short and a long buzz	■ When you enter wrong information.

You can change the settings of the buzzer by using the buttons on the control panel.
To change the setting of the buzzer, press the **+** (plus) button until SETUP is displayed, then press the **Set** button. Press the **+** (plus) button until `ERROR BUZZER`, `PANEL BUZZER` or `BUZZER VOLUME` is displayed and press **Set**.
See *SETUP* on page 3-16 for a description of the buzzer settings.

Braille symbols

The control panel with Braille symbols is optionally available for some countries. If you want to buy an optional control panel with Braille symbols, call the dealer you bought the printer from.

The control panel buttons are marked with Braille characters for visually-impaired users as shown in the table.

Table 3 - 3: Braille symbols list

Button	Abbreviations	Braille*
Go	Go	
Job Cancel	Can	
Reprint	Rep	

*Braille indicates the first 2 or 3 letters of the English button name. For example, **Job Cancel** is shown as “can” in Braille.

4 Options

Optional accessories and supplies

This printer has the following optional accessories. You can increase the capabilities of the printer with these items.

Options

Lower tray unit	Network board (For HL-6050/6050D)	Wireless print server	CompactFlash® card
LT-6000	**NC-6100h**	**NC-7100w**	
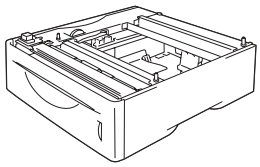	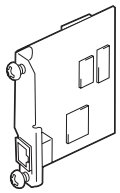	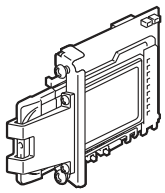	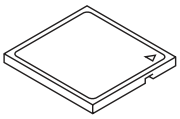
See *4-2*	See *4-3*	See *4-6*	See *4-9*

DIMM memory	Optional fonts package	Optional barcode fonts package
	BS-3000	**BT-1000**
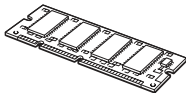		
See *4-11*	See *4-15*	See *4-15*

Lower tray unit (LT-6000)

The lower tray unit (Tray 2) is an optional device that can hold up to 500 sheets of paper (80 g/m^2 or 20 lb). When all three trays are installed, the printer can hold up to 1100 sheets of plain paper. If you want to buy an optional lower tray unit, call the dealer you bought the printer from.

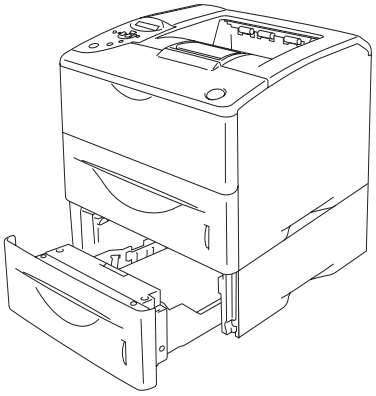

Expands up to a total of 1100 sheets

Figure 4-1

To install the lower tray unit, please see the User's Guide that we have supplied with the lower tray unit.

Network board (NC-6100h) (For HL-6050 and HL-6050D)

Installing the Brother network board (NC-6100h) allows you to connect the printer on a network running TCP/IP, IPX/SPX, AppleTalk, DLC/LLC, and NetBEUI protocols. Many useful features, such as BRAdmin Professional for the administrator and Brother network printing software, are included on the CD-ROM supplied with this printer.

For setup, see the Network User's Guide.

Installing the network board

1. Turn off the printer power switch, and then unplug the printer.
2. Slide and remove the side cover.

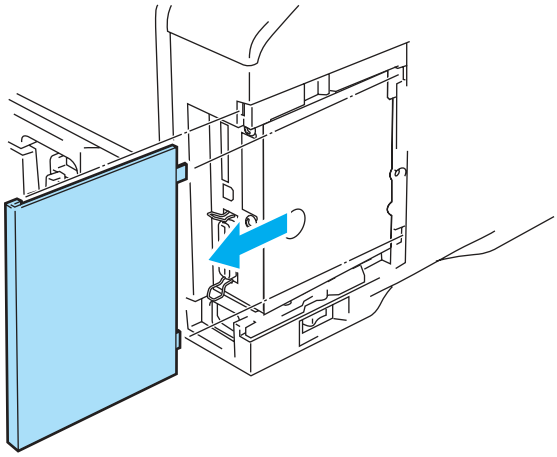

Figure 4-2

3. Open the interface access cover.

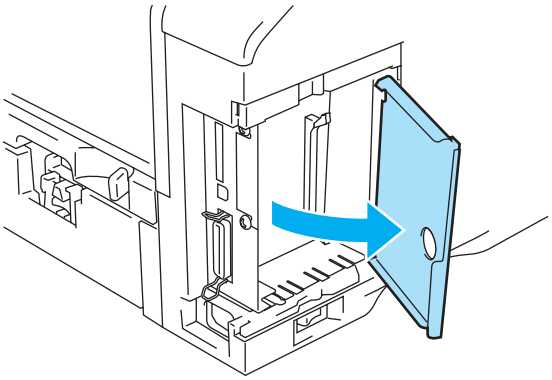

Figure 4-3

4 Loosen the two screws, and then remove the Network cover plate.

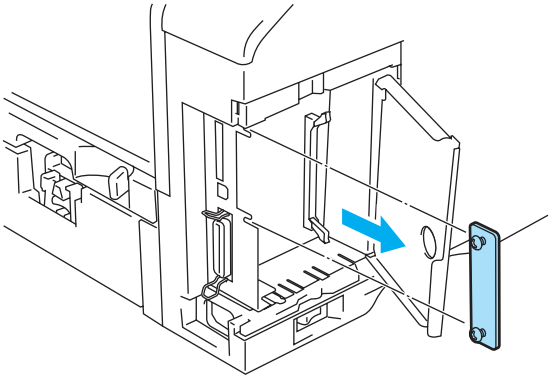

Figure 4-4

5 Put the network board connector firmly into the connector of the main controller board by aligning the two screws to the groove of the printer, and then secure it with the two screws.

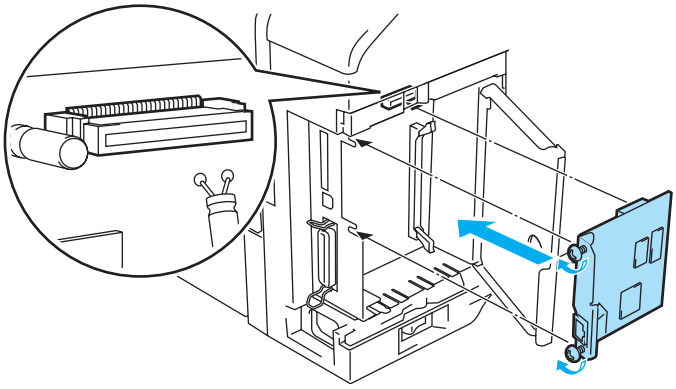

Figure 4-5

6 Close the interface access cover.

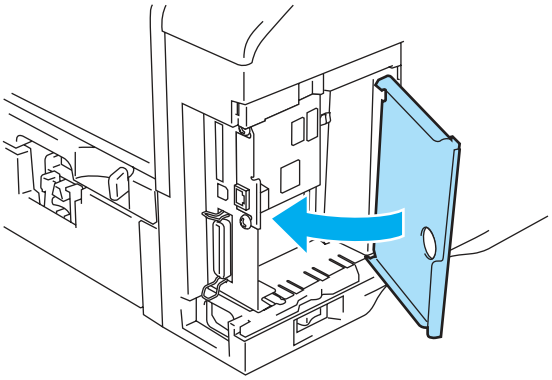

Figure 4-6

7 Put the side cover back on.

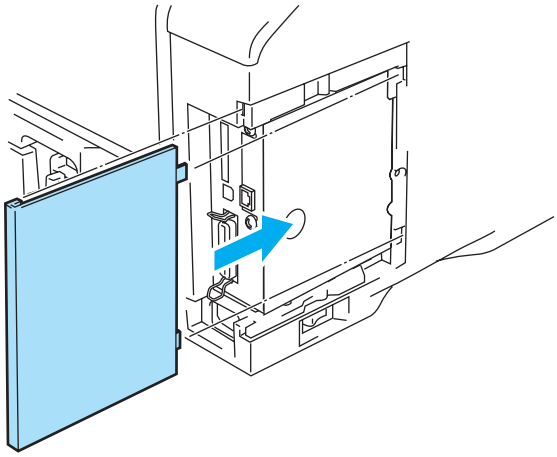

Figure 4-7

8 Connect one end of the ethernet cable to the network port of the printer.

9 Plug the printer back in, and then turn on the power switch.

10 For details about how to use the Network board, please see the Network User's Guide on the CD-ROM that we have supplied with this printer.

Wireless print server (NC-7100w)

The Brother NC-7100w wireless print server supports the IEEE 802.11b and 802.11g wireless networking standards and can work in Infrastructure or Ad-hoc mode using common wireless authentication and security methods.

For more information, see the NC-7100w Network User's Guide on the CD-ROM and the Quick Setup Guide that we have supplied with the NC-7100w wireless print server.

Installing the network board

1. Turn off the printer power switch, and then unplug the printer if connected. Disconnect the interface cable from the printer.
2. Slide and remove the side cover of the printer.

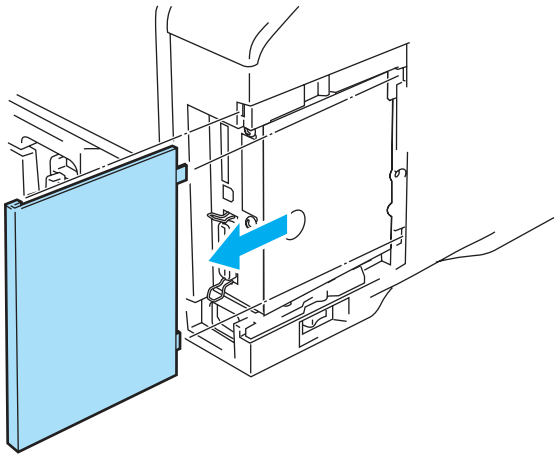

Figure 4-8

3. Open the interface access cover.

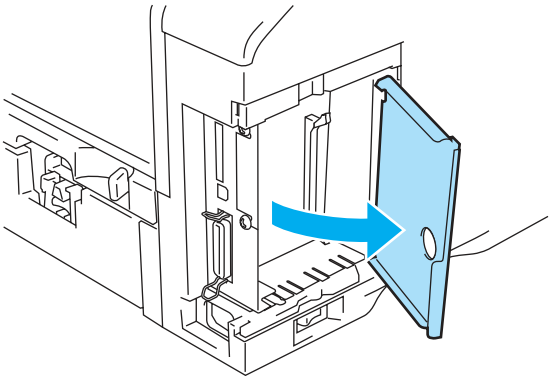

Figure 4-9

4 Loosen the two screws, and then remove the Network cover plate.

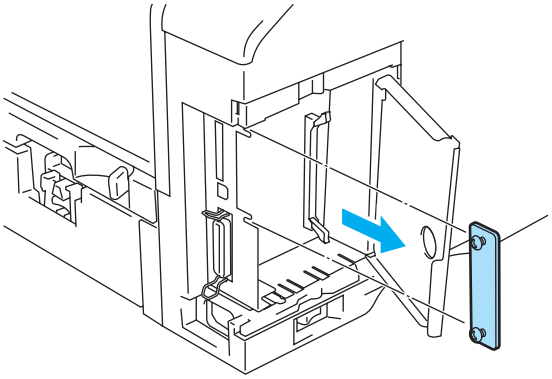

Figure 4-10

5 Put the NC-7100w print server connector firmly into the connector of the main controller board by aligning the two screws to the groove of the printer, and then secure it with the two screws.

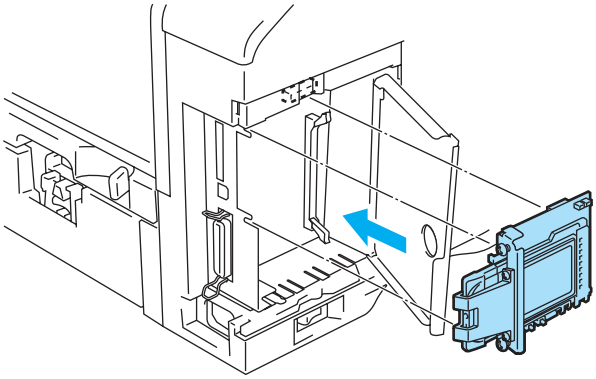

Figure 4-11

6 Close the interface access cover.

7 Put the side cover back on.

8 Plug the printer back in, and then turn on the power switch.

9 Make sure that the POWER LED of the print server is on.

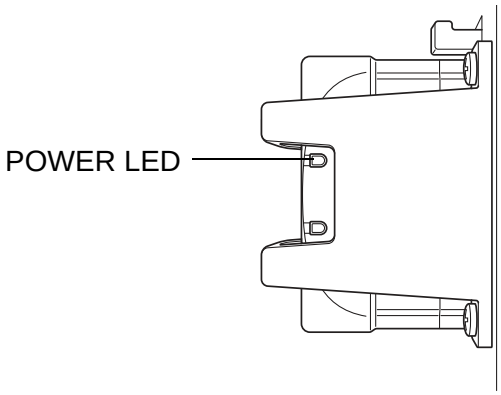

Figure 4-12

10 For details about how to use the NC-7100w wireless print server, please see the Network User's Guide on the CD-ROM that we have supplied with NC-7100w.

CompactFlash® card

This printer has a slot for an optional industry standard CompactFlash® card, which is a memory card.

If you install an optional CompactFlash® card, you can save macros, the print log and fonts on it. You can also select a stored print job and reprint it through the network.

You can install the following types of CompactFlash® cards.

SanDisk (or SanDisk OEM Products)

Type I

- 32 MB SDCFB-32-801
- 64 MB SDCFB-64-801
- 128 MB SDCFB-128-801
- 256 MB SDCFB-256-801
- 512 MB SDCFB-512-801
- 1 GB SDCFB-1000-801

- Make sure the printer power is OFF before you insert or remove the card to avoid serious damage or data loss.
- IBM Microdrive® is not compatible.
- For more information about the CompactFlash® card, call the dealer you bought the printer from or Brother customer service.
- For the latest information, visit: http://solutions.brother.com

Inserting the CompactFlash® card

Follow these steps to insert or remove a card:

1. Turn off the printer power switch, and then unplug the printer.
2. Insert the CompactFlash® card into the slot with the label facing to the left, pressing the card firmly into the slot.

Caution

Do not insert the card into the slot with the label facing the wrong way, as this may damage the connector pins.

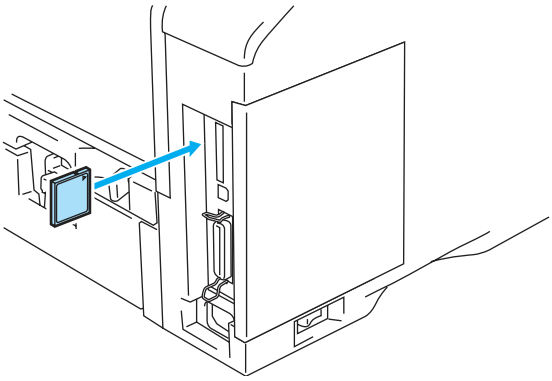

Figure 4-13

Before you remove the card, turn the power switch OFF, and then unplug the printer. To remove the card, pull it out of the printer.

DIMM

The HL-6050, HL-6050D and HL-6050DN printers have 32 MB of standard memory and one slot for optional memory expansion. You can expand the memory up to 160 MB by installing dual in-line memory modules (DIMMs).

You can install the following DIMMs:

- 16 MB TechWorks 12456-0001
- 32 MB TechWorks 12457-0001
- 64 MB TechWorks 12458-0001
- 128 MB TechWorks 12459-0001

For more information, visit Techworks website at http://www.techworks.com

In general, the DIMM must have the following specifications:

Type:	100 pin and 32 bit output
CAS latency:	2 or 3
Clock frequency:	66 MHz or more
Capacity:	16, 32, 64 or 128 MB
Height:	35 mm (1.4 in.) or less
Parity:	NONE
Dram Type:	SDRAM 4 Bank

SDRAM can be used.

- There might be some DIMMs that will not work with the printer.
- For more information, call the dealer you bought the printer from or Brother Customer Service.
- For the latest information and drivers, visit the Brother Solutions Center at http://solutions.brother.com

Installing additional memory

When you install extra memory, follow these steps:

1. Turn off the printer power switch, and then unplug the printer. Disconnect the interface cable from the printer.

Make sure you turn the power to the printer OFF before you install or remove the DIMM.

2. Slide and remove the side cover.

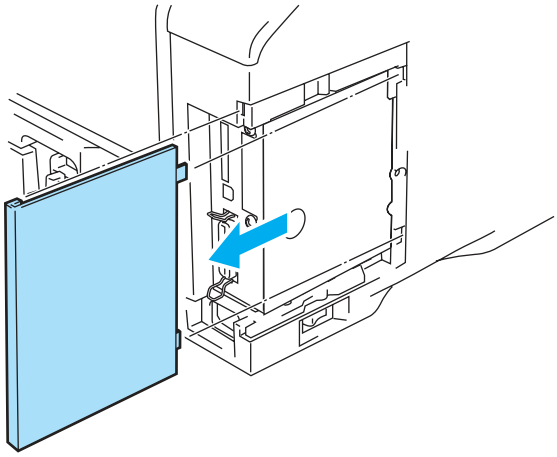

Figure 4-14

3. Open the interface access cover.

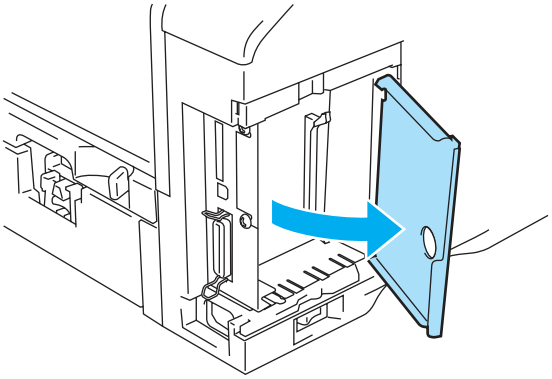

Figure 4-15

4. Unpack the DIMM and hold it by its edges.

5 Hold the DIMM on the side edges. Line up the notches on the DIMM with the DIMM slot. (Check that the locks on each side of the DIMM slot are open or facing outwards.)

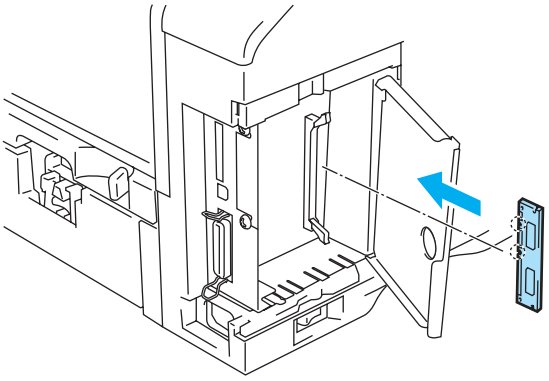

Figure 4-16

6 Press the DIMM straight into the slot (press firmly). Make sure the locks on each side of the DIMM click into place. (To remove a DIMM, you must release the locks.)

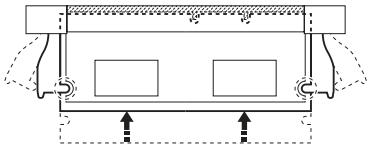

Figure 4-17

7 Close the interface access cover.

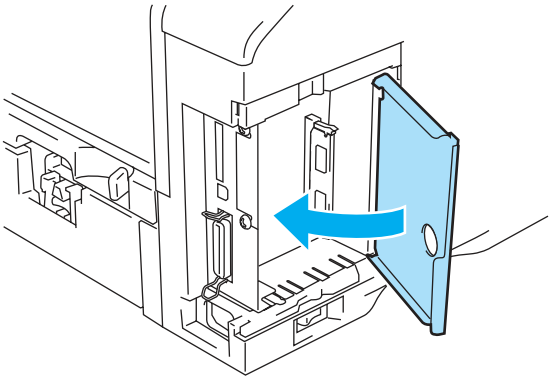

Figure 4-18

8 Put the side cover back on.

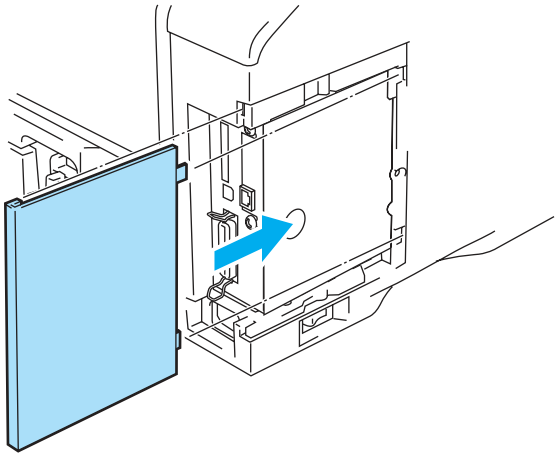

Figure 4-19

9 Reconnect the interface cable to your printer. Plug the printer back in, and then turn on the printer power switch.

To check that you have installed the DIMM properly, you can print the Printer Settings page that shows the current memory size. To print the Printer Settings page, see *Support tab* on page 2-9 or *INFORMATION* on page 3-14

Optional fonts package

Optional fonts package (BS-3000)

The optional font package (BS-3000) is the CD-ROM you need for installing the 136 PostScript® 3™ Agfa and TrueType Fonts.

Optional barcode fonts package (BT-1000)

The optional Barcode fonts package (BT-1000) is the CD-ROM you need for installing the Barcode fonts.

Selecting the optional fonts

After you have installed the optional fonts, you can select optional fonts using any of the following methods:

1. Through your application software
2. With a font selection command
3. With the control panel menu settings.

When you select fonts through your application software, follow the instructions specific to your software. See your software manual if you need assistance. When you select fonts with a font selection command, embed the font selection command in your program. See the *Technical Reference Guide*. Please call a Brother authorized service representative or Brother Customer Service for references to the *Technical Reference Guide*.

When you select the fonts through your software or with a command, note the following:

- You do not need to be concerned about the font control panel setting. The software or command overrides the printer setting.
- Be sure to install a fonts package that has the fonts you want. The printer automatically selects the font that has exactly the same or similar characteristics as those you have set through the software or with a command. If the installed fonts package does not happen to have a font of similar characteristics, the printer will print in an unexpected font.

To select fonts with the control panel setting menu, follow these basic steps:

1. Press any of the **Menu** buttons (**+**, **-**, **Set** or **Back**) to take the printer off line.
2. Press **+** or **-** until `INFORMATION` appears on the LCD display.
3. Press **Set** to proceed to the next menu level, and then press **+** or **-** until `PRINT FONTS` appears.
4. Press **Set** to print the list of optional fonts.
5. Find the font number on the list.
6. Press **+** or **-** on the control panel to select `PRINT MENU`.
7. Press **Set** to proceed to the next menu level, and then press **+** or **-** to select HP LASERJET, EPSON FX-850, or IBM PROPRINTER.
8. Press the **Set** button to select the emulation for the fonts you want to select HP LASERJET, EPSON FX-850, or IBM PROPRINTER.
9. Press **+** or **-** button to select FONT NO, and then select the font number of the font you want.

5 Routine maintenance

Replacing the consumable items

You will need to replace the consumable items regularly. When the time comes to replace consumable items, the following messages will appear at intervals on the LCD panel.

`TONER LOW` (Appears at intervals)

See *TONER LOW Message* on page 5-2.

`TONER LIFE END`

See *TONER LIFE END message* on page 5-2.

`CHANGE DRUM SOON`

See *CHANGE DRUM SOON message* on page 5-8.

Accessories

Toner Cartridge	Drum Unit
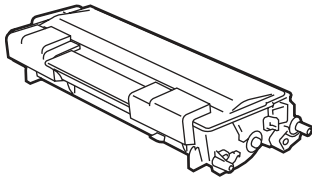	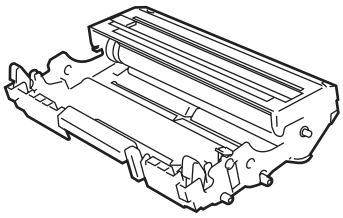
See *Toner cartridge* on page 5-2.	See *Drum unit* on page 5-8.

Toner cartridge

A new toner cartridge contains enough toner to print up to 7,500 A4 or Letter size single-sided pages at about 5% coverage.

- Toner consumption varies according to the image coverage on the page and the print density setting.
- The greater the image coverage, the greater the toner consumption.
- If you change the print density setting for lighter or darker printing, toner consumption varies accordingly.
- Wait to unpack the toner cartridge until immediately before you install it in the printer.

TONER LOW Message

(Appears at intervals)

```
TONER LOW
```

If the LCD shows TONER LOW, the toner cartridge has nearly run out of toner. Purchase a new toner cartridge and have it ready before you get a TONER LIFE END message. To replace the toner cartridge, see *Replacing the toner cartridge* on page 5-3.

TONER LIFE END message

```
TONER LIFE END
```

Check printed pages, page counter, and LCD messages routinely. When TONER LIFE END is displayed on the LCD, the printer has run out of toner or the toner is not evenly distributed inside the cartridge.

For both conditions the printer will stop printing, until a new toner cartridge has been put into the printer. TONER LIFE END can only be cleared, by putting a new toner cartridge into the drum unit.

Replacing the toner cartridge

To make sure you get high quality print, we recommend that you use only Brother genuine toner cartridges. When you want to buy toner cartridges, call the dealer you bought the printer from or Brother customer service.

We recommend that you clean the printer when you replace the toner cartridge. See *Cleaning* on page 5-14.

1 Press the cover release button and then open the front cover of the printer.

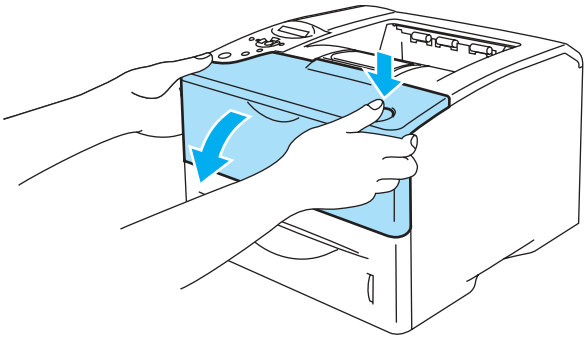

Figure 5-1

2 Take out the drum unit assembly (drum unit with toner cartridge).

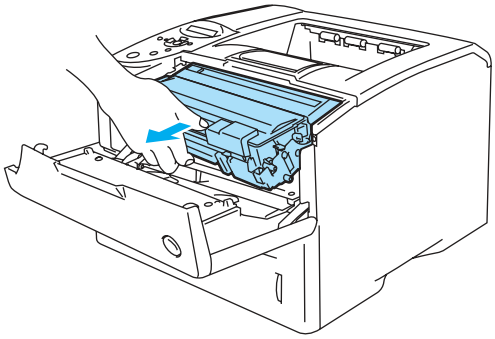

Figure 5-2

Caution

- We recommend that you place the drum unit assembly on a piece of disposable paper or cloth in case you accidentally spill or scatter toner.
- To prevent damage to the printer from static electricity, do not touch the electrodes shown in Figure 5-3.

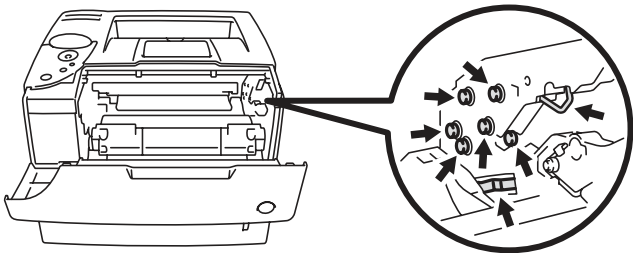

Figure 5-3

3 Push down the blue lock lever and take the toner cartridge out of the drum unit assembly.

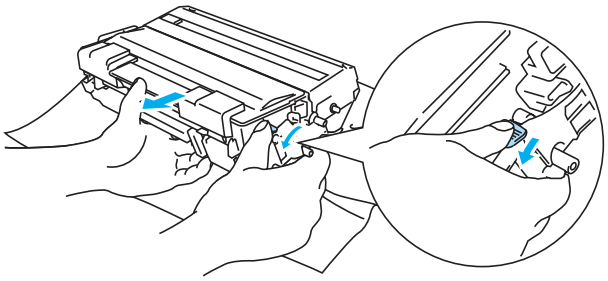

Figure 5-4

Caution

Handle the toner cartridge carefully. If toner scatters on your hands or clothes, immediately wipe or wash it off with cold water.

- Be sure to seal up the toner cartridge tightly so that toner powder does not spill out of the cartridge.
- Discard the used toner cartridge according to local regulations, keeping it separate from domestic waste. If you have questions, call your local waste disposal office.

4 Unpack the new toner cartridge. Hold the cartridge level with both hands and gently rock it from side to side five or six times to spread the toner evenly inside the cartridge.

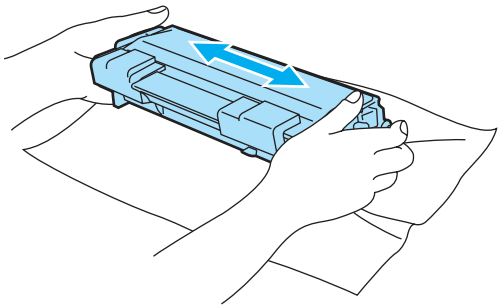

Figure 5-5

Caution

- Wait to unpack the toner cartridge until immediately before you put it in the printer. If toner cartridges are left unpacked for a long time the toner life will be shortened.
- If an unpacked drum unit is put in direct sunlight or room light, the unit may be damaged.
- Brother strongly recommends that you do not refill the toner cartridge provided with your printer. We also strongly recommend that you continue to use only Genuine Brother Brand replacement toner cartridges. Using or attempting to use potentially incompatible toner and/or toner cartridges in your printer may cause damage to the printer itself and/or it may result in unsatisfactory print quality. Our warranty coverage does not apply to any problem that was caused by the use of unauthorized third party toner and toner cartridges. To protect your investment and guarantee your print quality please continue to replace consumed toner cartridges with only Genuine Brother Branded Supplies.
- Printing with a third-party toner or third-party toner cartridge may reduce not only the print quality but also the quality and life of the printer itself. It may also cause serious damage to the performance and life of a drum unit. Warranty coverage does not apply to problems caused by the use of third-party toner or third-party toner cartridges.

5 Pull off the protective cover.

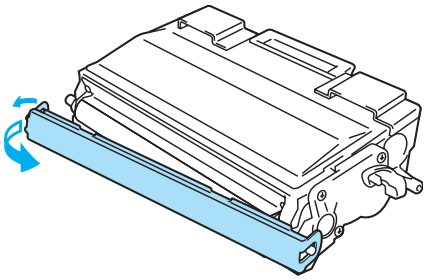

Figure 5-6

Caution

Put the toner cartridge in the drum unit immediately after you have removed the protective cover. To prevent degradation to the print quality, do not touch the shaded parts shown in Figure 5-7.

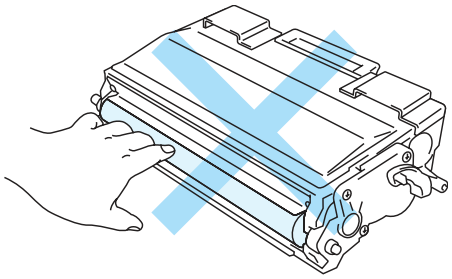

Figure 5-7

6 Put the new toner cartridge firmly into the drum unit until you hear it lock into place. If you put it in properly, the lock lever will lift automatically.

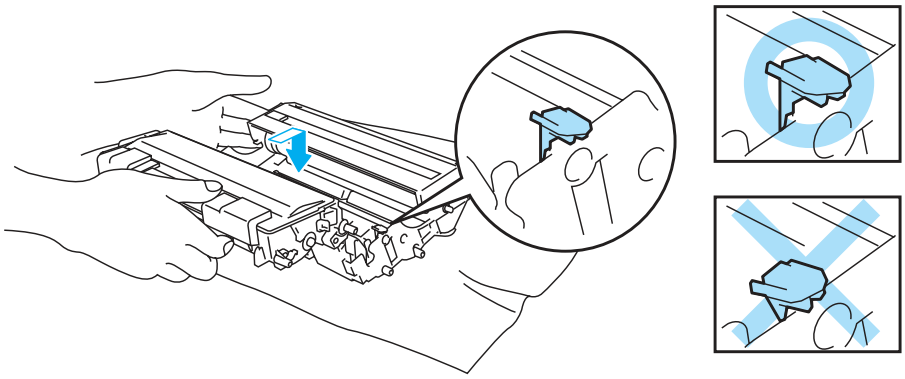

Figure 5-8

Caution

Make sure you insert the toner cartridge properly or it may separate from the drum unit.

7 Gently wipe the scanner window with a dry, soft cloth.

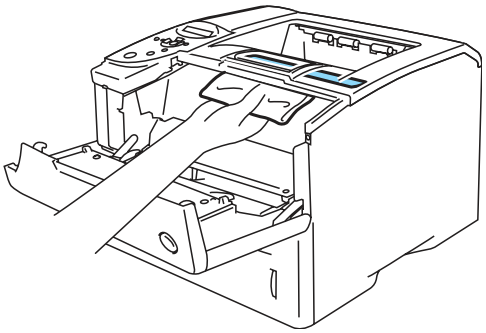

Figure 5-9

8 Clean the primary corona wire inside the drum unit by gently sliding the blue tab from right to left and left to right several times. Return the tab to the home position (▲) before you put the drum unit back in the printer. If you do not, printed pages may have a vertical stripe.

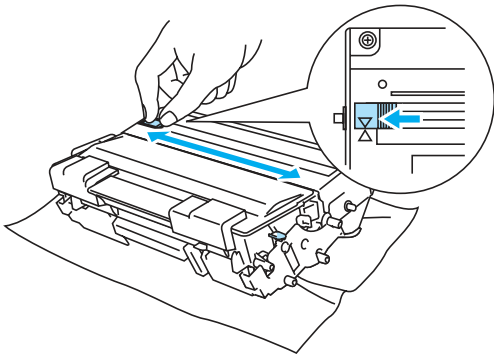

Figure 5-10

9 Put the drum unit assembly back in the printer. Close the front cover of the printer.

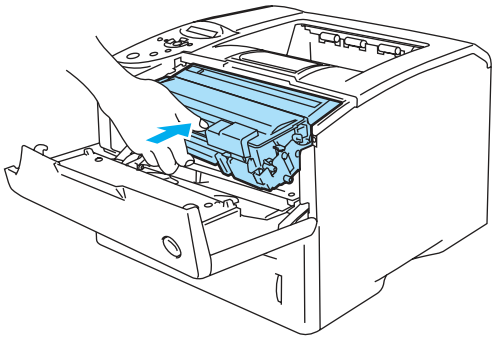

Figure 5-11

Drum unit

This printer can print up to 30,000 pages* with one drum unit.

* At 5% print coverage (A4 or Letter size). The actual number of printed pages will vary depending on the average type of print job and paper.

- There are many factors that determine the actual drum life, such as the temperature, humidity, type of paper, type of toner used, number of pages per print job and so on. Under ideal conditions, the average drum life is estimated at up to 30,000 pages. The actual number of pages that your drum will print may be significantly less than this estimate. Because we have no control over the many factors that determine the actual drum life, we cannot guarantee a minimum number of pages that will be printed by your drum.
- For best performance, use only genuine Brother toner. The printer should be used only in a clean, dust-free environment with adequate ventilation.
- Printing with a third-party drum unit may reduce not only the print quality but also the quality and life of the printer itself. Warranty coverage does not apply to problems caused by the use of third-party drum unit.

CHANGE DRUM SOON message

```
CHANGE DRUM SOON
```

The printer uses a drum unit to create the print images on paper. If the LCD shows CHANGE DRUM SOON, it means the drum unit is near the end of its life. We recommend that you replace the drum unit with a new one before there is a noticeable deterioration in the print quality.

Replacing the drum unit

Caution

While removing the drum unit, handle it carefully because it may contain toner.

We recommend that you clean the printer when you replace the drum unit. See *Cleaning* on page 5-14.

Follow these steps to replace the drum unit. You can also view the drum unit replacement method in the instructional video on the supplied CD-ROM:

1 Press the cover release button and then open the front cover of the printer.

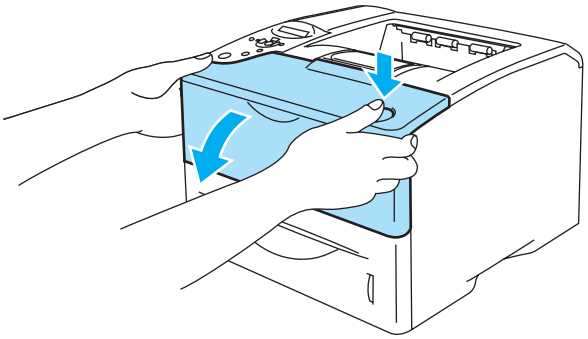

Figure 5-12

2 Take out the drum unit assembly (drum unit with the toner cartridge).

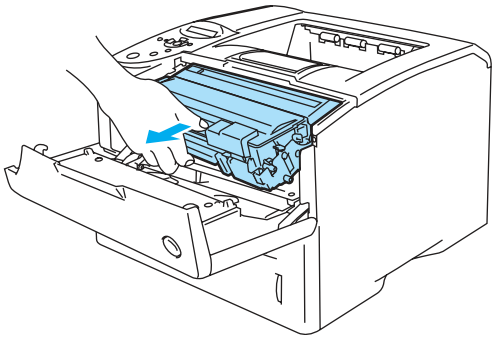

Figure 5-13

Caution

- We recommend that you place the drum unit assembly on a piece of disposable paper or cloth in case you accidentally spill or scatter toner.
- To prevent damage to the printer from static electricity, do not touch the electrodes shown in Figure 5-13.

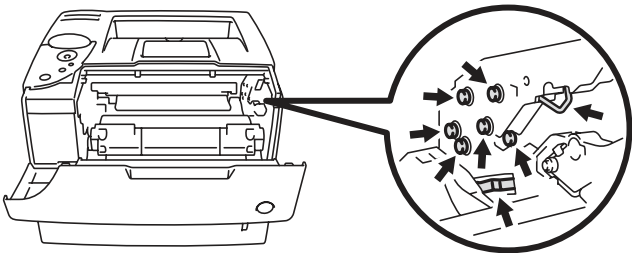

Figure 5-14

3 Push down the blue lock lever and take the toner cartridge out of the drum unit assembly.

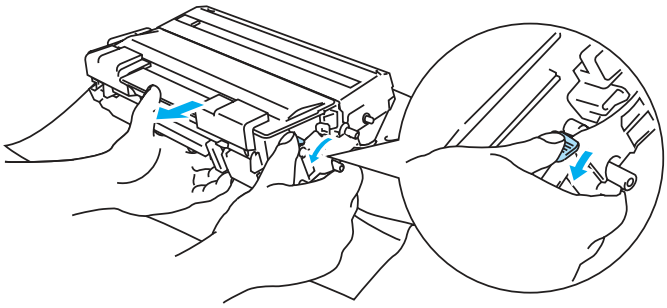

Figure 5-15

Caution

Do not touch the shaded parts shown in Figure 5-16 and Figure 5-17 to prevent any degradation to the print quality.

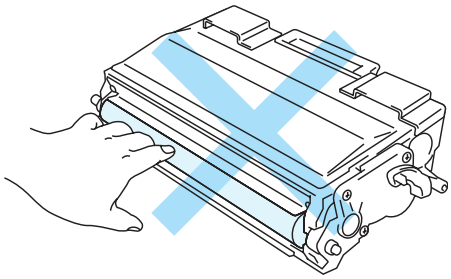

Figure 5-16

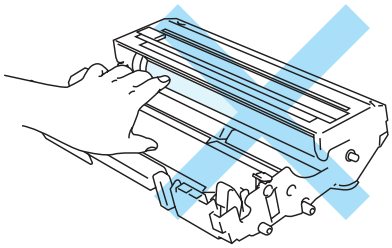

Figure 5-17

Caution

Handle the toner cartridge carefully. If toner scatters on your hands or clothes, immediately wipe or wash it off with cold water.

- Discard the used drum unit according to local regulations, keeping it separate from domestic waste. If you have questions, call your local waste disposal office.
- Be sure to seal up the drum unit tightly in a bag so that toner powder does not spill out of the unit.

4 Unpack the new drum unit.

Caution

Wait to unpack a drum unit until immediately before you put it in the printer. Exposure to direct sunlight or room light may damage the drum unit.

5 Put the toner cartridge firmly into the new drum unit until you hear it lock into place. If you put the cartridge in properly, the blue lock lever will lift automatically.

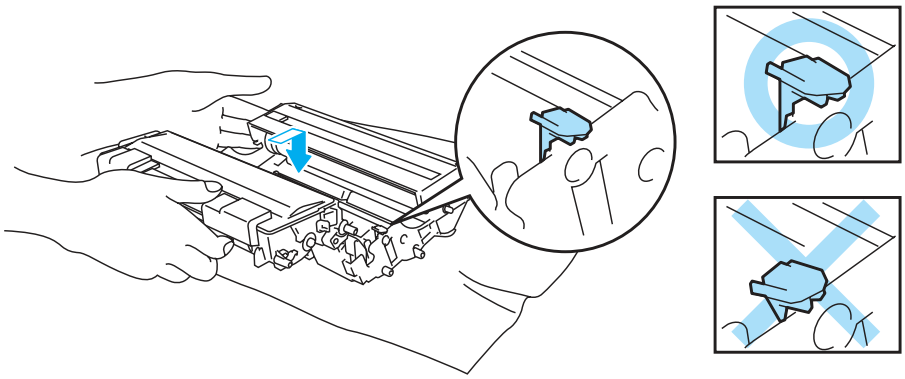

Figure 5-18

Caution

Make sure you insert the toner cartridge properly, or it may separate from the drum unit when you pick up the drum unit assembly.

6 Gently wipe the scanner window with a dry, soft cloth.

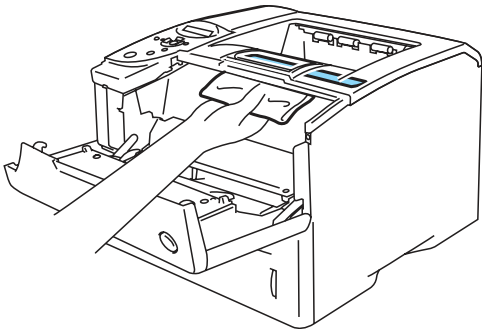

Figure 5-19

7 Put the drum unit assembly in the printer. Make sure that the printer is turned on and the front cover is open.

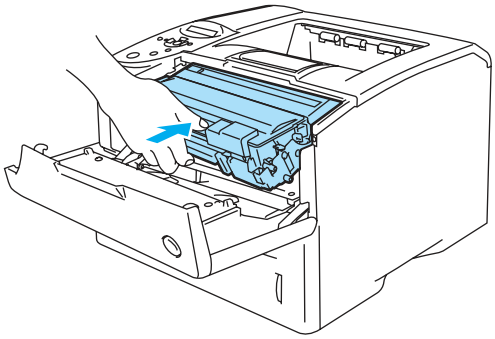

Figure 5-20

8 Reset the drum counter. See the instructions supplied with the new drum unit.

Caution

Do not reset the drum counter when you replace only the toner cartridge.

9 Close the front cover of the printer.

Replacing Maintenance Parts

You will need to replace the maintenance parts regularly to maintain print quality. When it is time to replace these parts, the following messages will appear on the LCD.

```
REPLACE PF KITMP
```

```
REPLACE PF KIT 1
```

```
REPLACE PF KIT 2
```

```
REPLACE FUSER
```

```
REPLACE LASER
```

See *Maintenance Messages* below.

Maintenance Messages

LCD Message	Item	Approximate Life	To Purchase Replacement
REPLACE PF KITMP	Paper feeding kit for MP tray *1	100,000 pages *3	Call Customer Service
REPLACE PF KIT 1	Paper feeding kit for Tray 1 *2	100,000 pages *3	Call Customer Service
REPLACE PF KIT 2	Paper feeding kit for Tray 2 *2	100,000 pages *3	Call Customer Service
REPLACE FUSER	Fuser unit	150,000 pages *3	Call Customer Service
REPLACE LASER	Scanner unit	200,000 pages	Call Customer Service

*1 Paper feeding kit for MP tray means the paper pick up roller and the separation plate.

*2 Paper feeding kit for Tray 1 and Tray 2 means the paper feed roller, separation roller, separation pad and separation pad spring.

*3 At 5% print coverage (A4 or Letter size). The actual number of printed pages will vary depending on the print jobs and paper you use.

Cleaning

Clean the outside and inside of the printer with a **dry soft** cloth. When you replace the drum unit, make sure you clean the inside of the printer. If printed pages are stained with toner, clean the inside of the printer with a dry soft cloth.

- Use neutral detergents. Cleaning with volatile liquids such as thinner or benzine will damage the surface of the printer.
- Do not use cleaning materials that contain ammonia. They could damage the printer, particularly the toner cartridges.

Cleaning the outside of the printer

Clean the outside of the printer as follows:

1. Turn off the printer power switch, and then unplug the printer power cord.
2. Take the paper tray out of the printer.
3. Open the multi-purpose tray.
4. Wipe the outside of the printer with a soft cloth to remove dust.

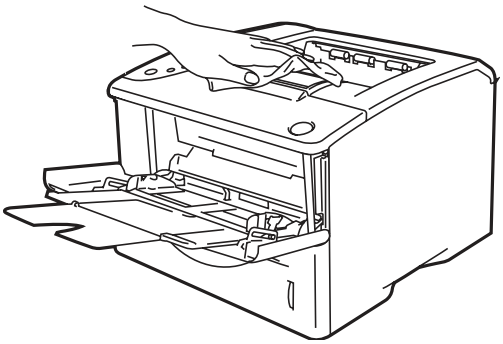

Figure 5-21

5. Remove anything that is stuck inside the paper tray.

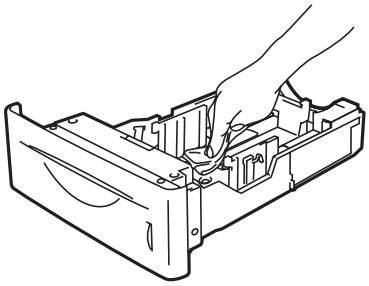

Figure 5-22

6. Put the paper tray back in the printer, and then close the multi-purpose tray.
7. Plug the printer power cord back in, and then turn the printer power switch back on.

Cleaning the inside of the printer

When you clean the inside of the printer, pay attention to the following:

- If your clothes are smeared with toner, wipe off the toner with a dry cloth and immediately wash the clothes in cold water to avoid stains.
- Be careful not to inhale the toner.
- After you have just used the printer, some parts inside the printer are extremely hot. When you open the front cover of the printer, never touch the fuser and fixing roller.

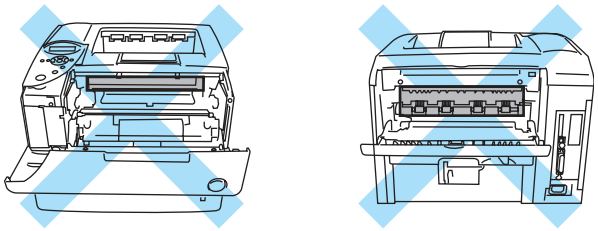

Figure 5-23

Clean the inside of the printer as follows:

1. Turn off the printer power switch, and then unplug the printer power cord.
2. Press the cover release button and then open the front cover of the printer.

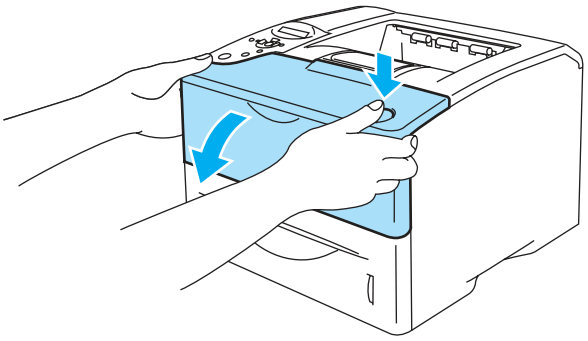

Figure 5-24

3. Take out the drum unit assembly (drum unit with the toner cartridge).

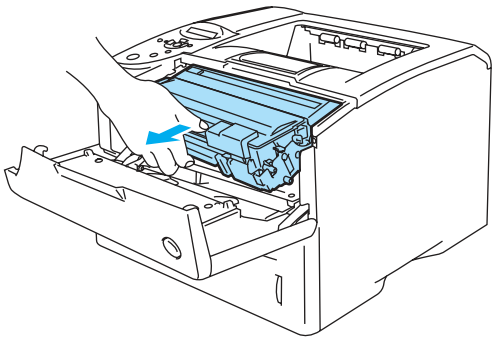

Figure 5-25

4 Wipe the scanner window with a dry, soft cloth.

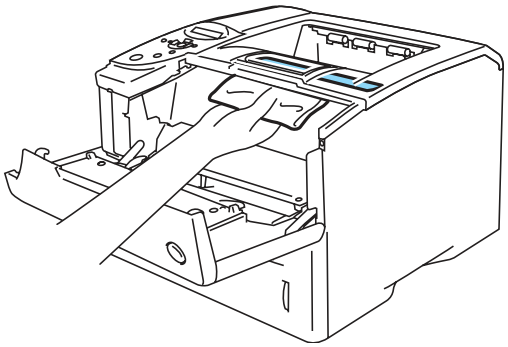

Figure 5-26

5 Put the drum unit assembly in the printer.
6 Close the front cover.
7 Plug the printer power cord back in, and then turn the printer power switch back on.

Cleaning the corona wire

If you are experiencing print quality problems, please clean the corona wire as follows:

1. Turn off the printer power switch, and then unplug the printer power cord.
2. Press the cover release button and then open the front cover of the printer.
3. Take out the drum unit assembly (drum unit with the toner cartridge).

Caution

- We recommend that you put the drum unit assembly on a piece of disposable paper or cloth in case you accidentally spill the toner.
- To prevent damage to the printer from static electricity, do not touch the electrodes shown in Figure 5-27.

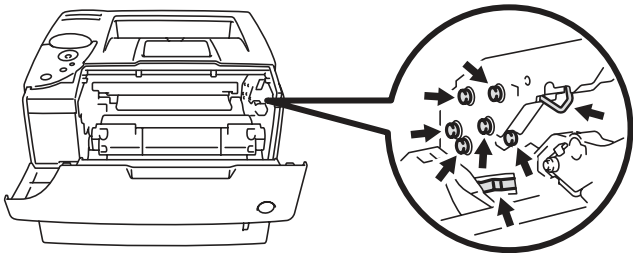

Figure 5-27

4. Clean the primary corona wire inside the drum unit by gently sliding the blue tab from right to left several times.

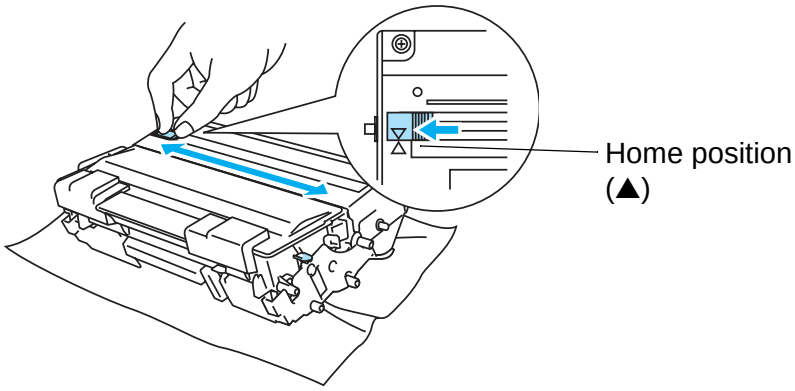

Figure 5-28

Caution

Make sure to return the tab to the Home position. If you do not, printed pages will have a black vertical stripe.

5. Put the drum unit assembly back in the printer.
6. Close the front cover.
7. Plug the printer power cord back in, and then turn the printer power switch back on.

6 Troubleshooting

If you do not follow the instructions for using the printer, you may be responsible for all repairs.

LCD messages

If any problems occur, the printer automatically stops printing, diagnoses the problem, and displays the resulting message on the LCD to alert you. Take the appropriate action, referring to the following tables. If you cannot clear the problem, call the dealer you bought the printer from or Brother Customer Service.

The LCD names for the paper trays are as follows.

Upper paper tray	TRAY 1
Multi-purpose tray	MP TRAY
Optional Lower tray	TRAY 2

Error messages

Error message	Action
BACK TRAY CLOSED	Open the back output tray. Push down the two blue levers, and then press **Go**.
BACK TRAY OPEN	Close the back output tray located at the back of the printer.
BUFFER ERROR	Check the Interface settings.
CARD ERROR	Make sure of the following: The CompactFlash™ card is installed properly. The installed CompactFlash™ card is formatted properly Turn off the printer. Wait a few seconds, then turn it on again. If this error message appears again, replace the CompactFlash™ card with a new one.
CARTRIDGE ERROR	Take out the toner cartridge and put it back into the printer again. See *Replacing the toner cartridge* on page 5-3.
CHECK NET BOARD	The istalled network board is not compatible. Please install the recommended network board.
CHECK NET VER.	The firmware version of the installed network board is not up to date. Please update the firmware by accessing the Brother Solutions Center at http://solutions.brother.com
CLEAN DRUM UNIT	Open the front cover. Take out the drum unit assembly. Gently slide the blue tab of the drum unit across several times.
DIMM ERROR	Re-install the DIMM correctly. Turn off the printer. Wait a few seconds, and then turn it on again. If this error message appears again, replace the DIMM with a new one.
DOWNLOAD FULL	Add more memory. See *Installing additional memory* on page 4-12.
DX LEVER ERROR	Move the lever at the back of the printer to the correct paper size position; A4, Letter or Legal
ERROR FUSER	Turn the power switch off, wait a few seconds and then turn it on again. Leave the printer for 15 minutes with the power on.
FONT FULL	Add more memory. See *Installing additional memory* on page 4-12.

Error messages (Continued)

Error message	Action
FRONT COVER OPEN	Close the front cover of the printer.
FUSER COVER OPEN	Close the jam clear cover located behind the back output tray at the back of the printer.
IGNORE DATA	Make sure that you use the correct driver, or add more memory. See *Installing additional memory* on page 4-12.
JAM XXX	Carefully pull out the jammed paper from the indicated area as shown in *Paper jams and how to clear them* on page 6-5.
MANUAL FEED	Put the same size of paper in the multi-purpose tray as is shown on the LCD. If the printer is 'paused', press **Go**.
MEDIATYPE ERROR	Specify the correct type of media.
MEMORY FULL	Add more memory. See *Installing additional memory* on page 4-12.
NO DX TRAY	Put the duplex tray on the printer properly. See *page 1-37*.
NO PAPER XXX	Put paper in the empty tray.
NO TRAY XXX	Put the paper tray in the printer.
PRINT OVERRUN	Reduce the resolution or add the optional memory. See *Installing additional memory* on page 4-12. Set **Page Protection** to the correct size. See *Device Options* on page 2-5 and *SETUP* on page 3-16.
SIZE ERROR DX	You can only use A4, Letter and Legal size for duplex printing. Check the printer driver setting and put the correct sized paper in the paper tray or multi-purpose tray that is selected in the printer driver. See *What kind of paper can I use?* on page 1-5.
SIZE ERROR T1/T2	Put the same size paper in the paper tray or multi-purpose tray that is selected in the printer driver. See *What kind of paper can I use?* on page 1-5.
SIZE MISMATCH	Put the same size paper in the paper tray or multi-purpose tray that is selected in the printer driver, and then press **Go**.
STORAGE FULL	Delete unnecessary macros or fonts, or replace the CompactFlash™ card or HDD with a new one.
TRAY 1 ERROR	Take out the tray 1 from the printer and push it back in firmly.
TRAY 2 ERROR	Take out the tray 2 from the printer and push it back in firmly.
TONER LIFE END	Replace the toner cartridge with a new one. See *Replacing the toner cartridge* on page 5-3.

Maintenance messages

Maintenance message	Action
CHANGE DRUM SOON	The drum unit is almost at the end of life. Prepare a new drum unit. See *CHANGE DRUM SOON message* on page 5-8.
TONER LOW	Purchase a new toner cartridge and have it ready before you get a TONER LIFE END message. To replace the toner cartridge, *see Replacing the toner cartridge* on page 5-3.
TONER LIFE END	Replace the new toner cartridge. *See Replacing the toner cartridge* on page 5-3.
REPLACE PF KITMP	Call your dealer or Brother customer service for a replacement paper feeding kit (paper pick up roller and separation plate) for the MP tray.
REPLACE PF KIT 1	Call your dealer or Brother customer service for a replacement paper feeding kit (paper feed roller, separation roller, separation pad, and separation pad spring) for Tray 1.
REPLACE PF KIT 2	Call your dealer or Brother customer service for a replacement paper feeding kit (paper feed roller, separation roller, separation pad, and separation pad spring) for Tray 2.
REPLACE FUSER	Call your dealer or Brother customer service for a replacement fuser unit.
REPLACE LASER	Call your dealer or Brother customer service for a replacement laser unit.

Call service messages

Call service message	Action
ERROR ###	Turn off the printer. Wait a few seconds, then turn it on again. If this does not clear the problem, call your dealer or a Brother Customer Service.

Troubleshooting paper handling

First, make sure that you are using paper that meets our recommended paper specifications. See *What kind of paper can I use?* on page 1-5.

Problem	Recommendation
The printer does not load paper.	■ If paper is in the paper tray, make sure it is straight. If the paper is curled, you should straighten it before printing. Sometimes it is helpful to remove the paper, turn the stack over, and then put it back in the paper tray. ■ Reduce the amount of paper in the paper tray, and then try again. ■ Make sure that manual feed mode is not set in the printer driver. ■ If there is paper dust on the separation roller, wipe it off with a moistened soft cloth. ■ The pickup roller or separation pad needs to be replaced. Please call your dealer or Brother customer service for a replacement.
The printer does not load paper from the multi-purpose tray.	■ Fan the paper well and put it back in firmly. ■ Make sure you have chosen the manual feed mode in the printer driver.
The printer does not load envelopes.	■ The printer can load envelopes from the multi-purpose tray. You must set up your application software to print on the size of envelopes you are using. This is usually done in the page setup or document setup menu of your software. Please see your software application manual for instructions.
Envelope is creased after it is printed.	■ Open the back output tray, and push down the blue tabs that are at the left-hand and right-hand sides of the back of the printer.
There is a paper jam.	■ Clear the jammed paper (see *Paper jams and how to clear them* on page 6-5). ■ If there is paper dust on the separation roller, wipe it off with a moistened soft cloth. ■ The pickup roller or separation pad needs to be replaced. Please call your dealer or Brother customer service for a replacement.
The printer feeds multiple pages.	■ The pickup roller or separation pad needs to be replaced. Please call your dealer or Brother customer service for a replacement.
The printer does not print to the face-down output tray.	■ Close the back output tray.
The printed pages are curled, so the face-down output tray cannot hold the maximum number of sheets.	■ Turn over the paper in the paper tray. ■ Change the printer driver setting in Media Type to a thicker setting.
The printer does not print.	■ Make sure that the cable is connected to the printer. ■ Make sure that you have chosen the appropriate printer driver.
When printing on normal paper, it creases.	■ Change the printer driver setting in Media to the Thin setting.
When printing on Legal size paper or longer sized paper, the paper slides off the top output tray.	■ Pull up the output tray support flap.

Paper jams and how to clear them

If paper jams inside the printer, the printer will stop. One of the following LCD messages will appear to tell you where to find the jammed paper.

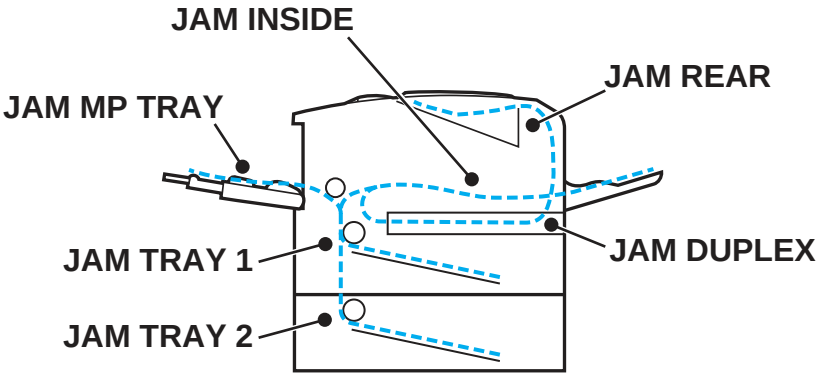

Figure 6-1

`JAM MP TRAY`	Paper jam in the multi-purpose tray
`JAM TRAY1`	Paper jam in the upper paper tray (TRAY 1)
`JAM TRAY2`	Paper jam in the lower tray (TRAY 2)
`JAM INSIDE`	Paper jam inside the printer
`JAM REAR`	Paper jam where the paper comes out of the printer Paper jam in the back output tray
`JAM DUPLEX`	Paper jam in the duplex unit

Paper may jam in the paper tray, inside the printer, in the back output tray or where the paper comes out of the printer. Check where the jam is and follow the instructions on the next few pages to remove the jammed paper.

If the error message still appears on the LCD after you remove the jammed paper, there may be more paper jammed somewhere else. Please check the printer thoroughly.

After you have removed all the jammed paper, open the front cover and then close it again to start printing.

Do not use the following:

- Bent/wrinkled paper
- Moist paper
- Paper that does not meet specifications

JAM MP TRAY (paper jam in the multi-purpose tray)

```
JAM MP TRAY
```

If there is a paper jam in the multi-purpose tray, follow these steps:

1. Press the cover release button and then open the front cover of the printer.
2. Take out the drum unit assembly (drum unit with the toner cartridge).
3. Remove the paper from the multi-purpose tray.
4. Fan the paper stack, then put it back in the multi-purpose tray.

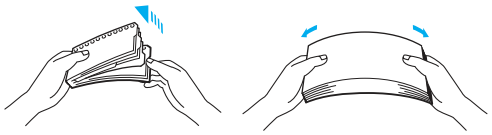

Figure 6-2

5. When loading paper in the multi-purpose tray, make sure it touches the back of the tray and stays below the maximum paper mark (▼).
6. Open the front cover of the printer and close it, or press **Go** to start printing.

JAM TRAY 1 / TRAY 2
(Paper jam inside the Paper tray)

The LCD names for the paper trays are as follows.

Tray type	Tray name
Upper paper tray	TRAY 1
Optional lower tray	TRAY 2

```
JAM TRAY1
```

```
JAM TRAY2
```

If a paper jam occurs inside the paper tray, follow these steps:

1. Pull the paper tray completely out of the printer.

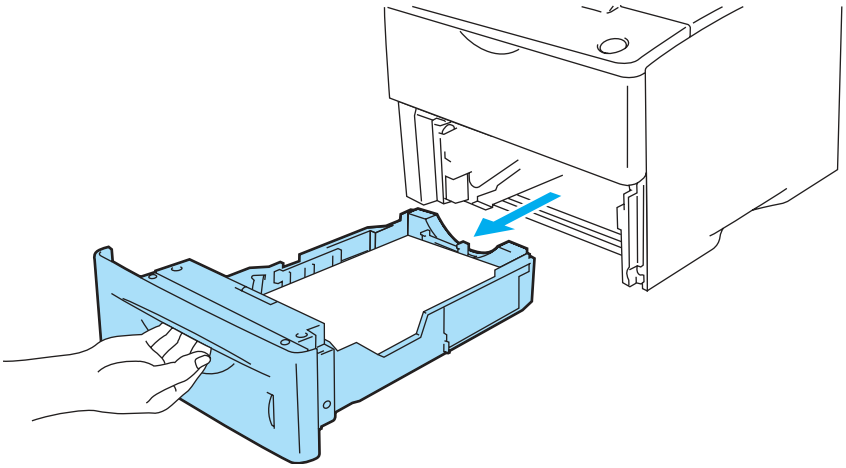

Figure 6-3

2 Use both hands to slowly pull out the jammed paper.

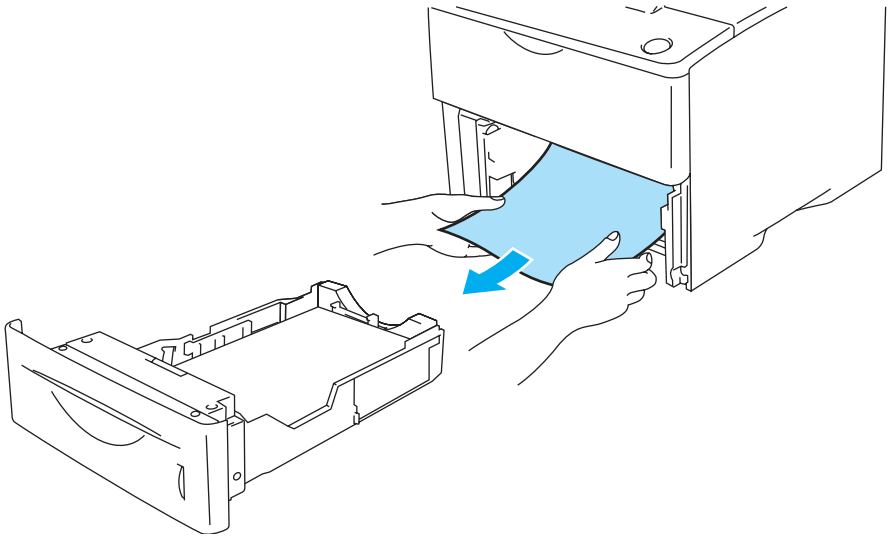

Figure 6-4

■ If you cannot pull out a small piece of jammed paper, you can remove it by turning the dial, as shown below.

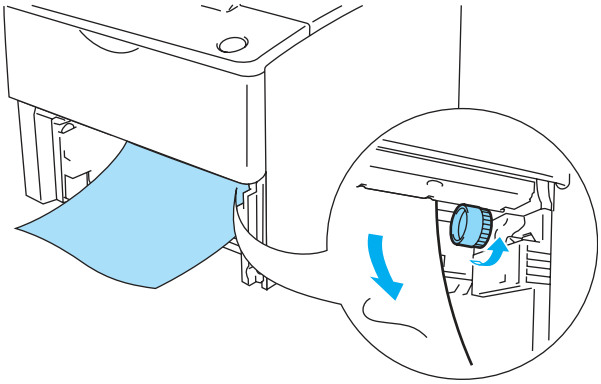

Figure 6-5

3 Put paper below the maximum paper mark (▼). While pressing the [blue] paper-guide release lever, slide the paper guides to fit the paper size. Check that the guides are firmly in the slots.

4 Put the paper tray firmly back in the printer.

5 Open the front cover of the printer, and then close it to resume printing.

Caution

Do not take out the upper paper tray while paper is feeding from a lower paper tray because this will cause a paper jam.

JAM INSIDE (paper jam inside the printer)

```
JAM INSIDE
```

⚠ After you have just used the printer, some parts inside the printer are extremely hot. When you open the front cover of the printer, never touch the fuser or the fixing roller.

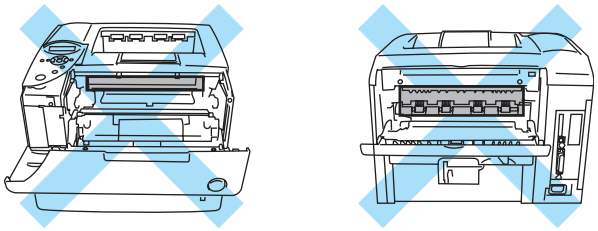

Figure 6-6

If a paper jam occurs inside the printer, follow these steps:

1. Press the cover release button and then open the front cover of the printer.

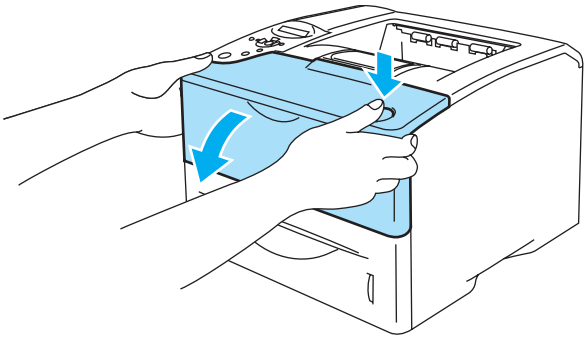

Figure 6-7

2. Take out the drum unit assembly (drum unit with the toner cartridge).

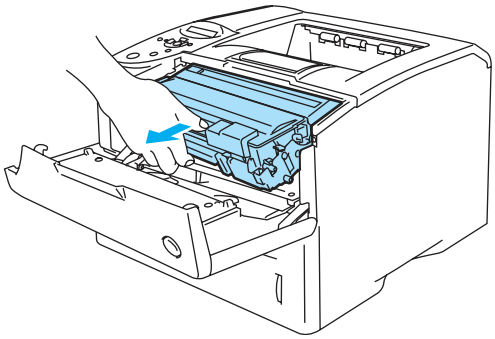

Figure 6-8

Caution

- After you have removed the jammed paper, print a few test pages. This is to make sure that the printed pages have no toner stains on them before you restart the print job.
- Remove the jammed paper carefully so you do not spread toner.
- Take care not to stain your hands and clothes with toner. Wash toner stains immediately with cold water.

Caution

- We recommend that you put the drum unit assembly on a piece of disposable paper or cloth in case you accidentally spill the toner.
- To prevent damage to the printer from static electricity, do not touch the electrodes shown in Figure 6-9.

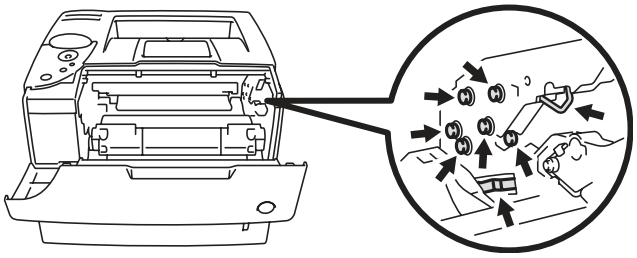

Figure 6-9

3 Use both hands to slowly pull out the jammed paper.

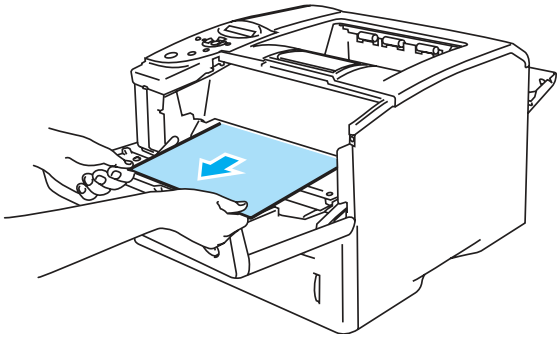

Figure 6-10

4 Push down the blue lock lever of the drum unit assembly and take the toner cartridge out of the drum unit assembly. Remove a piece of jammed paper if there is any inside the drum unit.

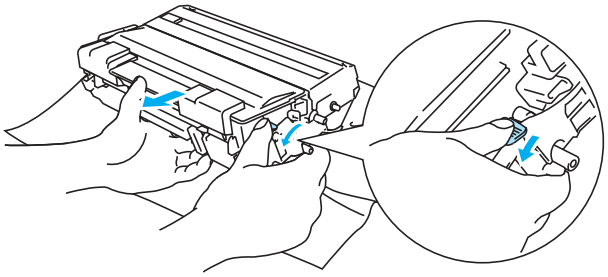

Figure 6-11

Caution

- Handle the toner cartridge carefully. If toner scatters on your hands or clothes, wipe or wash it off with cold water immediately.
- Do not touch the shaded parts shown in Figure 6-12 and 6-13 to avoid any degradation to the print quality.

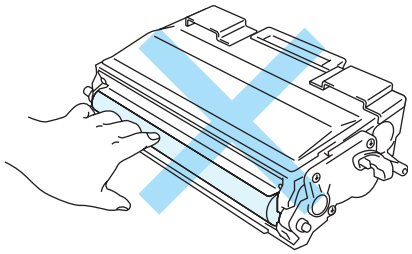

Figure 6-12

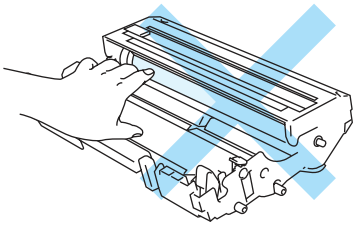

Figure 6-13

5 Put the drum unit assembly back in the printer (press firmly).

6 Close the front cover of the printer.

JAM REAR (paper jam behind the back output tray)

```
JAM REAR
```

⚠ After you have just used the printer, some parts inside the printer are extremely hot. When you open the front cover of the printer, never touch the fuser or the fixing roller.

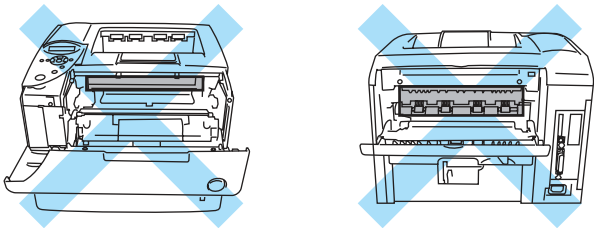

Figure 6-14

When the paper jams behind the face-up output tray, remove the jammed paper as follows:

1. Press the cover release button and then open the front cover of the printer.

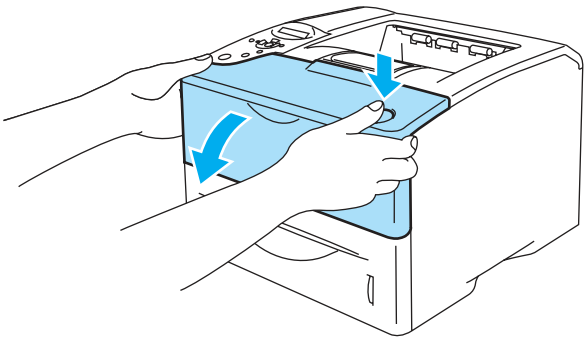

Figure 6-15

2. Take out the drum unit assembly (drum unit with the toner cartridge).

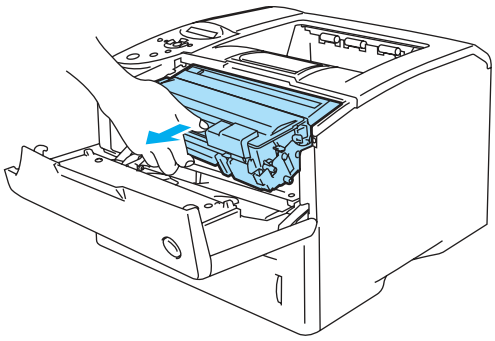

Figure 6-16

Caution

- We recommend that you place the drum unit assembly on a piece of disposable paper or cloth in case you accidentally spill or scatter toner.
- To prevent damage to the printer from static electricity, do not touch the electrodes shown in Figure 6-17.

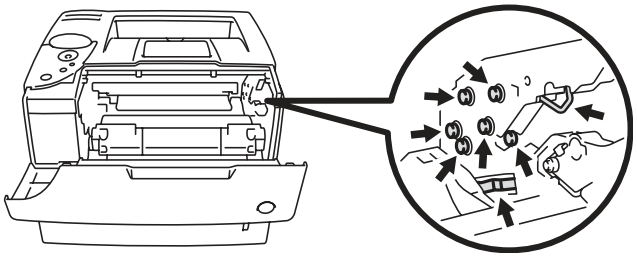

Figure 6-17

3 Use both hands to slowly pull out the jammed paper.

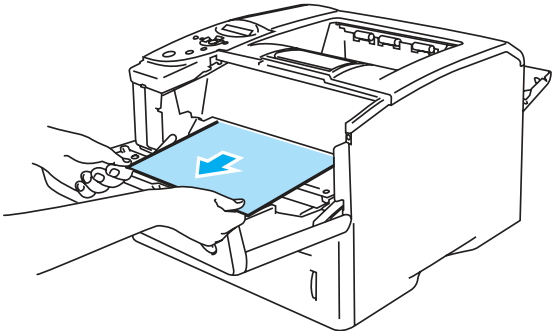

Figure 6-18

4 Open the back output tray.

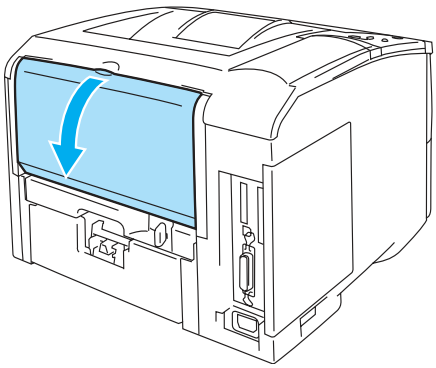

Figure 6-19

5 Push down the blue tabs at the left and right hand sides.

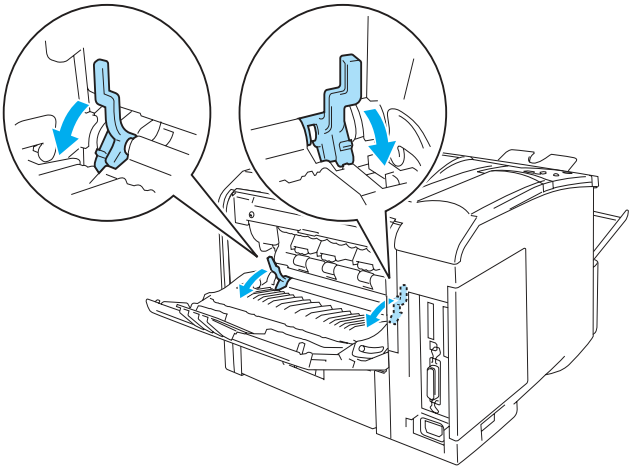

Figure 6-20

6 Open the jam clear cover by pushing the levers inward at the left and right hand sides. Pull the jammed paper out of the fuser unit.

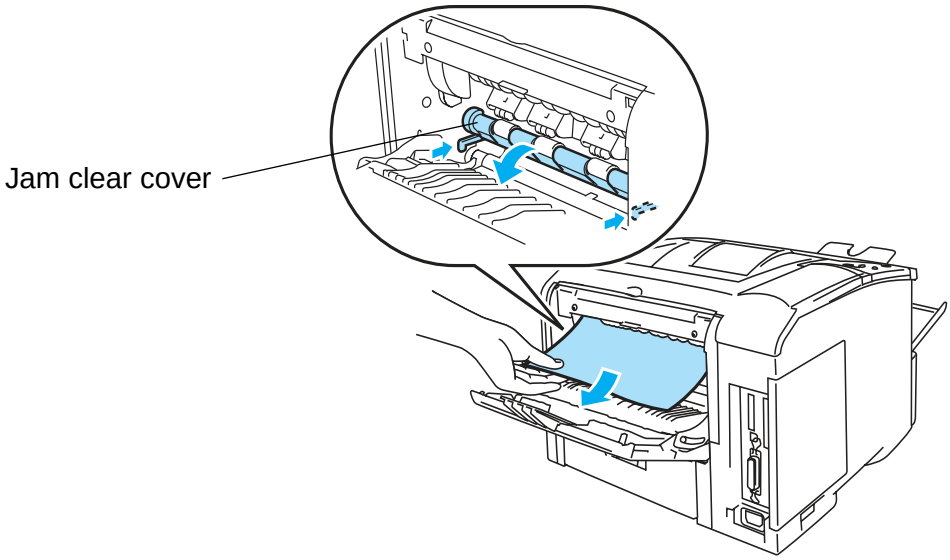

Figure 6-21

7 Close the jam clear cover.
8 Close the back output tray.
9 Put the drum unit assembly back in the printer (press firmly).
10 Close the front cover of the printer.

JAM DUPLEX (paper jam in the duplex unit)

```
JAM DUPLEX
```

Follow the instructions below to clear a paper jam:

1. Open the back output tray.

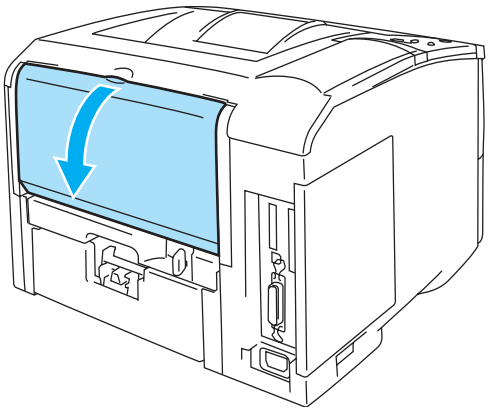

Figure 6-22

2. Use both hands to slowly pull the jammed paper out of the fuser unit.

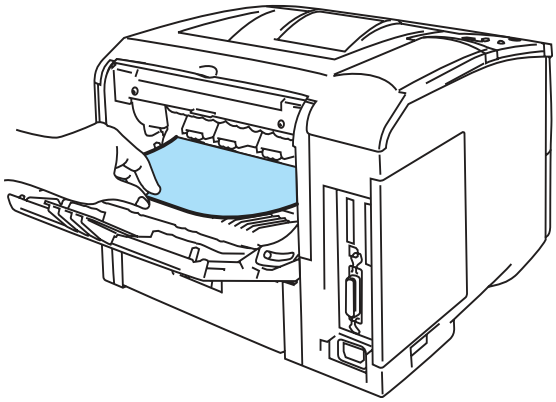

Figure 6-23

3. Close the back output tray.
   If the paper jam cannot be cleared, go to the next step.

4 Pull the duplex tray and paper tray out of the printer.

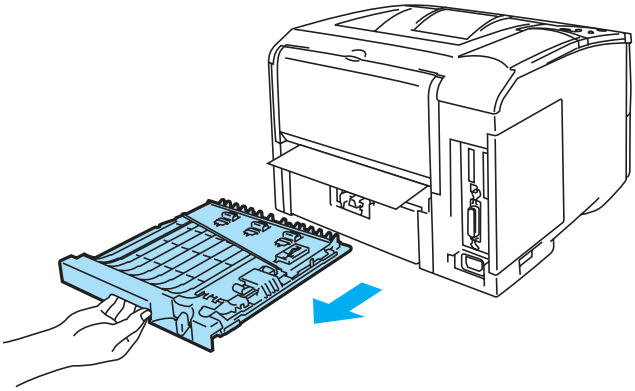

Figure 6-24

5 Pull the jammed paper out of the printer.

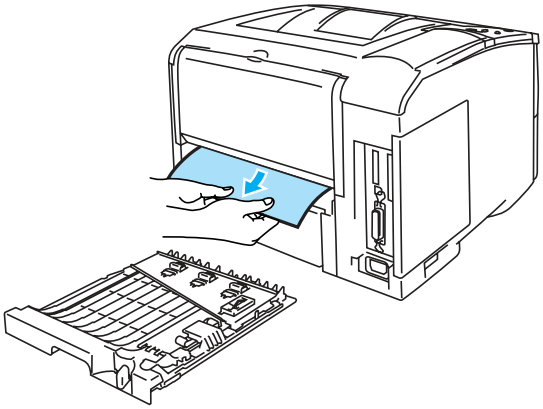

Figure 6-25

6 Put the duplex tray and paper tray back in the printer.

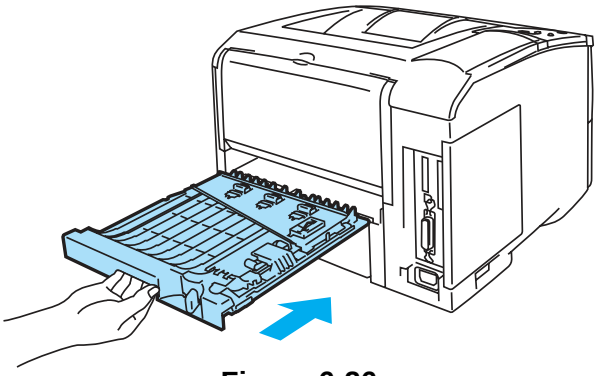

Figure 6-26

- The JAM DUPLEX message appears if you remove a sheet of paper from the face down output tray after only one side has printed.
- The paper sizes you can use with the duplex printing function are A4, Letter or Legal.
- If the paper adjustment lever for duplex printing is not set correctly for the paper size, paper jams may occur and the printing will be out of position on the page.

Improving the print quality

This section provides information on the following topics.

If the same problem occurs again, call your dealer or Brother Customer Service.

Examples of poor print quality	Recommendation
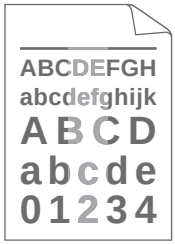 **Faint print**	■ Check the printer's environment. Conditions such as humidity, high temperatures, and so on may cause this print fault. See *Positioning the printer* on page 1-4. ■ If the whole page is too light, **Toner Save Mode** may be on. Turn off **Toner Save Mode** in the printer **Properties** tab of the driver. ■ Put in a new toner cartridge. See *Replacing the toner cartridge* on page 5-3. ■ Put in a new drum unit. See *Replacing the drum unit* on page 5-8. ■ Increase the print density by using the QUALITY menu on the printer control panel. See *QUALITY* on page 3-15. ■ You may clear the problem by wiping the scanner window with a soft cloth. See *Cleaning the inside of the printer* on page 5-15 or the maintenance tutorial video on the supplied CD-ROM.
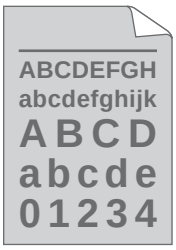 **Gray background**	■ Make sure you use paper that meets the recommended specifications. See *What kind of paper can I use?* on page 1-5. ■ Check the printer's environment - high temperatures and high humidity can increase the amount of background shading. See *Positioning the printer* on page 1-4. ■ Use a new toner cartridge. See *Replacing the toner cartridge* on page 5-3. ■ Use a new drum unit. See *Replacing the drum unit* on page 5-8.
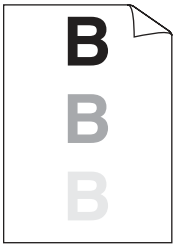 **Ghost image**	■ Make sure you use paper that meets our specifications. Rough-surfaced paper, paper that has absorbed moisture, or thick paper can cause this problem. See *What kind of paper can I use?* on page 1-5. ■ Make sure that you choose the appropriate media type in the printer driver. See *What kind of paper can I use?* on page 1-5. ■ Put in a new toner cartridge. See *Replacing the toner cartridge* on page 5-3. ■ Put in a new drum unit. See *Replacing the drum unit* on page 5-8. ■ The fuser unit may be contaminated. Call customer service.
 Toner specks	■ Make sure that you use paper that meets our specifications. Rough-surfaced paper may cause the problem. See *What kind of paper can I use?* on page 1-5. ■ The toner cartridge may be damaged. Put in a new toner cartridge. See *Replacing the toner cartridge* on page 5-3. ■ The drum unit may be damaged. Put in a new drum unit. See *Replacing the drum unit* on page 5-8. ■ The fuser unit may be smudged. Call customer service.

Examples of poor print quality	Recommendation
 Hollow print	■ Make sure that you use paper that meets our specifications. See *What kind of paper can I use?* on page 1-5. ■ Choose **Thick paper** mode in the printer driver, or use thinner paper than you are currently using. ■ Check the printer's environment because conditions such as high humidity can cause hollow print. See *Positioning the printer* on page 1-4.
 Page skewed	■ Make sure the paper or other print media is loaded properly in the paper tray and that the guides are not too tight or too loose against the paper stack. ■ Set the paper guides correctly. Make sure that the tips of the paper guides fit firmly into the slots. ■ If you are using the multi-purpose tray, See *Printing on plain paper from the multi-purpose tray (MP tray)* on page 1-13. ■ The paper tray may be too full. See *Printing on plain paper from the paper tray* on page 1-10. ■ Check the paper type and quality. See *What kind of paper can I use?* on page 1-5.
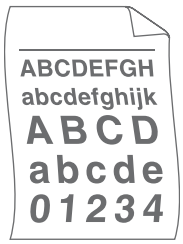 **Curl or wave**	■ Check the paper type and quality. High temperatures and high humidity will cause paper to curl. See *What kind of paper can I use?* on page 1-5. ■ If you don't use the printer very often, the paper may have been in the paper tray too long. Turn over the stack of paper in the paper tray. Also, fan the paper stack and then rotate the paper 180° in the paper tray. ■ Print using the straight-through output path. See *Printing on plain paper from the multi-purpose tray (MP tray)* on page 1-13.
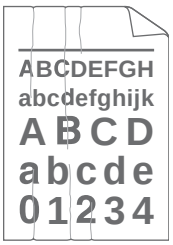 **Wrinkles or creases**	■ Make sure the paper is loaded properly. See *Printing on plain paper from the paper tray* on page 1-10. ■ Check the paper type and quality. See *What kind of paper can I use?* on page 1-5. ■ Turn over the stack of paper in the tray or try rotating the paper 180° in the input tray. ■ Print using the straight-through output path. See *Printing on plain paper from the multi-purpose tray (MP tray)* on page 1-13.
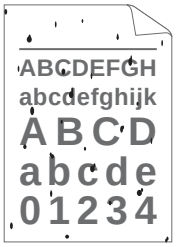 **Poor fixing**	■ Make sure that the blue tabs in the back cover are re-set by either closing the back cover or pushing the blue tabs to their original position. See *Printing on envelopes from the MP tray* on page 1-23.

Examples of poor print quality	Recommendation
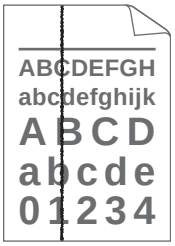 **Black lines down the page** Printed pages have toner stains stripes down the page.	■ You may clear the problem by cleaning the primary corona wire inside the drum unit by sliding the blue tab. Make sure to return the blue tab to the Home position (▼). See *Cleaning the corona wire* on page 5-17. ■ The toner cartridge may be damaged. Put in a new toner cartridge. See *Replacing the toner cartridge* on page 5-3. ■ The drum unit may be damaged. Put in a new drum unit. See *Replacing the drum unit* on page 5-8. ■ The fuser unit may be smudged. Call Customer Service.
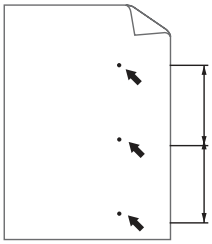 **Black spots** Black spots at 108 mm (4.25 in.) intervals.	■ You may clear the problem by printing a black page.
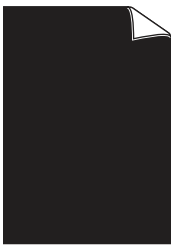 **All black**	■ You may clear the problem by cleaning the primary corona wire inside the drum unit by sliding the blue tab. Make sure you return the blue tab to the Home position (▼). See *Cleaning the corona wire* on page 5-17. ■ The drum unit may be damaged. Put in a new drum unit. See *Replacing the drum unit* on page 5-8. ■ The fuser unit may be smudged. Call Customer Service.
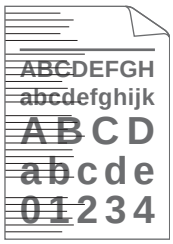 **Lines across the page**	■ Clean the inside of the printer and the primary corona wire in the drum unit. See *Cleaning* on page 5-14. ■ The drum unit may be damaged. Put in a new drum unit. See *Replacing the drum unit* on page 5-8.
 White lines down the page	■ You may clear the problem by wiping the scanner window with a soft cloth. *See Cleaning the inside of the printer* on page 5-15 or the Maintenance Tutorial video on the supplied CD-ROM. ■ The toner cartridge may be damaged. Put in a new toner cartridge. See *Replacing the toner cartridge* on page 5-3.

Examples of poor print quality	Recommendation
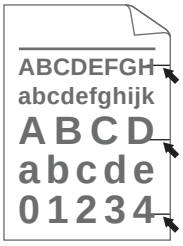 **Black toner marks across the page**	■ The drum unit may be damaged. Put in a new drum unit. See *Replacing the drum unit* on page 5-8. ■ Make sure that you use paper that meets our specifications. See *What kind of paper can I use?* on page 1-5. ■If you use label sheets for laser printers, the glue from the sheets may sometimes stick to the OPC drum surface. Clean the drum unit. See *Cleaning the inside of the printer* on page 5-15. ■Do not use paper that has clips or staples because they will scratch the surface of the drum. ■If the unpacked drum unit is in direct sunlight or room light, the unit may be damaged.
 White lines across the page	■ The problem may disappear by itself. Print multiple pages to clear this problem, especially if the printer has not been used for a long time. ■ The drum unit may be damaged. Put in a new drum unit. See *Replacing the drum unit* on page 5-8.

Examples of poor print quality	Recommendation
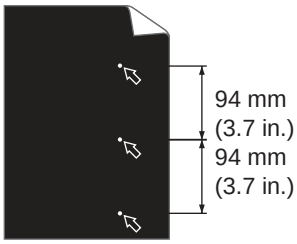 **White Spots on black text and graphics at 94 mm (3.7 in.) intervals** 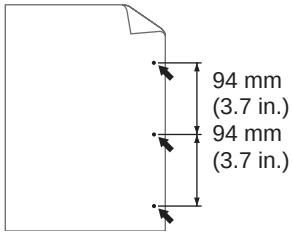 **Black Spots at 94 mm (3.7 in.) intervals**	■ If the problem is not solved after printing a few pages, the drum unit may have glue from label stock on the OPC drum surface. Clean the drum unit as follows: ***1*** Position the print sample in front of the drum unit, and find the exact position of the poor print. 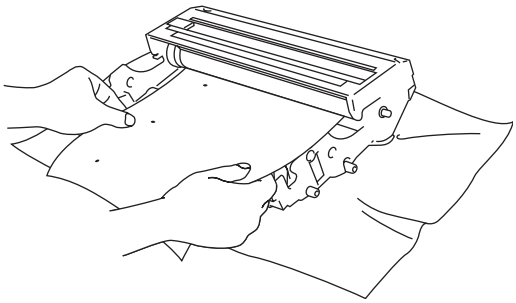 ***2*** Turn the drum unit gear by hand while looking at the surface of the OPC drum. 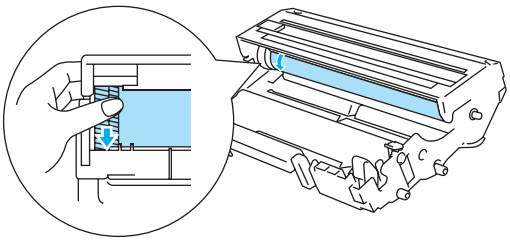 ***3*** When you have located the mark on the drum that matches the print sample, wipe the surface of the OPC drum with a cotton swab until the dust or paper powder on the surface comes off. 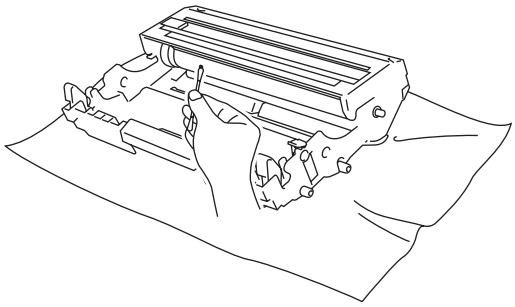 **Caution** Do not try to clean the surface of the photosensitive drum with a sharp object, such as a ball-point pen, and so on. ■ The drum unit may be damaged. Put in a new drum unit. See *Replacing the drum unit* on page 5-8.

Solving print problems

Problem	Recommendation
The printer prints unexpectedly or it prints garbage data.	■ Make sure the interface cable is not too long. We recommend that you use a parallel interface cable or USB interface cable that is no longer than 2 meters (6 feet). ■ Make sure that the printer cable is not damaged or broken. ■ If you are using an interface-switching device, remove it. Connect your computer directly to your printer, and then try again. ■ Check that you have chosen the appropriate printer driver with 'Set as default'. ■ Make sure that the printer is not connected to the same port that is also connected to a storage device or scanner. Take away all other devices and connect the port only to the printer. ■ Turn off the Status Monitor in the **Device Options** tab in the Windows® printer driver. See *Device Options* on page 2-5.
The printer cannot print full pages of a document.	■ Press the **Go** button to print the data that is left in the printer. ■ If the **Go** button does not clear the error, reduce the complexity of your document or reduce the print resolution. ■ Change the **TrueType mode** settings in the **Device Options** tab in the Windows® printer driver. See *Device Options* on page 2-5.
The printer cannot print full pages of a document. An error message `MEMORY FULL` appears.	■ Press the **Go** button to print the data that is left in the printer. ■ Reduce the print resolution or reduce the complexity of your document. ■ Expand the printer memory by adding a DIMM. See *DIMM* on page 4-11
The headers or footers appear when I view my document on the screen but they do not show up when I print it.	■ Most laser printers have a restricted area that cannot be printed on. This unprintable area is usually the first two lines and the last two lines of a page (leaving 62 printable lines). Adjust the top and bottom margins of your document to allow for this.

Other problems

Problem	Recommendation
The printer cannot print at all. Your PC shows the following error message: **'There was an error writing to LPT1: (or BRUSB) for the printer.'**	■ Check that the printer cable is not damaged or broken. ■ If you have an interface-switching device, make sure that you choose the correct printer.

Printing from DOS

Problem	Recommendation
Cannot print from application software	■ Check that the DOS application software interface settings match those of your printer. For example, if you are using a parallel printer cable, you would most likely set your DOS software printer port to LPT1. ■ Check if the printer has any printer alarms. ■ Check that you have chosen the appropriate printer in your application software.

BR-Script 3

Problem	Recommendation
The printer cannot print.	If `IGNORE DATA` appears on the LCD, please do the following: 1. Reset the printer: Press the **-** button twice, then press **Set** twice and then press **Go**. 2. Turn off ERROR PRINT in BR-Script3 mode: Press the **+** button five times, then press **Set** and then press the **-** button twice, now press **Set** twice, select **ERROR PRINT = OFF** and press **Set** and then press **Go**. 3. If the printer prints out the error message page which says "ERROR NAME; limitcheck", add more memory. See *Installing additional memory* on page 4-12.
The print speed slows down.	Add optional memory. See *Installing additional memory* on page 4-12.
The printer cannot print EPS data.	You need the following settings to print EPS data: 1. In the Printer folder, select the printer you use. 2. Press the **Advanced** button on the PostScript® tab. 3. Select **'Tagged binary communication protocol'** in data format.

Caution

If you do not follow the instructions for using the printer, you may be responsible for all repairs.

A Appendix (Specifications, fonts and bar code)

Printer specifications

Engine

Print method	Electrophotography by semiconductor laser-beam scanning	
Laser	Wave length: 780 nm Pulse duration: 20 ns Output: 10 mW max.	
Resolution	Windows® 95/98/Me, Windows NT® 4.0, Windows® 2000 and Windows® XP	1200 x 1200 dpi, 600 dpi, 300 dpi
	DOS	600 dpi
	Mac OS®	1200 x 1200 dpi, 600 dpi, 300 dpi
	Linux	1200 x 1200 dpi, 600 dpi, 300 dpi
Print speed	Up to 24 ppm when printing on A4 size paper (1200, 600 or 300 dpi) Up to 25 ppm when printing on Letter size paper (1200, 600 or 300 dpi) Up to 11 ppm when printing using duplex unit (1200, 600 or 300 dpi)*	
First print time	11 seconds or less (A4 or letter size using face-down printing from tray)	
Warm up	20 seconds at 23 °C (73.4 °F)	

* For HL-6050D and HL-6050DN

Controller

Processor	SPARClite 200 MHz		
Memory	Standard	32 MB	
	Option	1 DIMM slot; expandable up to 160 MB	
Interface	IEEE 1284 Parallel, Hi-Speed USB 2.0 10/100BASE-TX Ethernet (HL-6050DN)		
Network connectivity	Interface	NC-6100h	Standard 10/100BASE-TX Ethernet (HL-6050DN) Optional 10/100BASE-TX Ethernet (HL-6050 and HL-6050D)
		NC-7100w	Optional IEEE802.11b/g wireless
	Protocol	TCP/IP (ARP, RARP, BOOTP, DHCP, APIPA [Auto IP], WINS/NetBIOS, DNS, LPR/LPD, Raw Port/Port9100, POP3/SMTP, SMB Print, IPP, FTP, mDNS, SSDP, TELNET, SNMP, HTTP, TFTP), NetWare IPX/SPX, AppleTalk (NC-6100h and NC-7100w) DLC/LLC, NetBEUI (NC-6100h)	
	Management tool	BRAdmin Professional, Web BRAdmin, Web Based Management	
Storage device	CompactFlash® Card (Microdrive™ is not compatible.)		
Emulation	Automatic emulation selection PCL 6, BR-Script 3 (PostScript® 3™), EPSON FX-850, IBM Proprinter XL		
Resident printer fonts	PCL	66 scalable fonts, 12 bitmap fonts, 11 bar codes	
	BR-Script 3	66 fonts	
	Option	10 Agfa barcode fonts (BT-1000) 136 Agfa (PostScript® 3™) fonts (BS-3000)	

Software

Printer driver	Windows®	PCL printer driver for Windows® 95/98/Me, Windows NT® 4.0, Windows® 2000 and Windows® XP
		BR-Script 3 (PPD file) for Windows® 95/98/Me, Windows NT® 4.0, Windows® 2000 and Windows® XP
	Macintosh®	BR-Script 3 (PPD file) for Mac OS® 8.6 to 9.2 and Mac OS® X 10.1, 10.2 or greater
	Linux	GDI printer driver for Linux
		BR-Script 3 (PPD file) for Linux
Utilities	Interactive Help* Driver Deployment Wizard**	

* Instructional animations for problem solving

** The Driver Deployment Wizard automates the installation of a printer in a peer-to-peer network.

Control panel

Display	LCD: 1 line, 16 digits, 3 colors
	1 LED
Buttons	7 buttons: Go, Job Cancel, Reprint, Set, Back and 2 scroll buttons

Paper handling

Paper input*	Multi-purpose tray	100 sheets
	Paper tray (Standard)	500 sheets
	Lower tray (Option)	500 sheets
Paper output*	Face-down	250 sheets
	Face-up	50 sheets
Duplex	Manual duplex Automatic duplex for HL-6050D and HL-6050DN	

* Calculated with 80 g/m^2 or 20 lb. paper

Media specifications

Media types	Multi-purpose tray	Plain paper, Bond paper, Recycled paper, Envelopes, Labels and Transparency*5
	Paper tray (Standard)	Plain paper, Bond paper, Recycled paper, Transparency**
	Lower tray unit (Option) (LT-6000)	Plain paper, Bond paper, Recycled paper, Transparency**
	Automatic duplex printing	Plain paper, Recycled paper
Media weights	Multi-purpose tray	60 to 161 g/m^2 (16 to 43 lb)
	Paper tray (Standard)	60 to 105 g/m^2 (16 to 28 lb)
	Lower tray unit (Option) (LT-6000)	60 to 105 g/m^2 (16 to 28 lb)
	Automatic duplex printing	60 to 105 g/m^2 (16 to 28 lb)
Media sizes	Multi-purpose tray	Width: 69.9 to 215.9 mm (2.75 to 8.5 in.) Length: 116 to 406.4 mm (4.57 to 16 in.)
	Paper tray (Standard)	A4, Letter, Legal, A5, A6, B5 (ISO), B6 (ISO), Executive, Folio
	Lower tray unit (Option) (LT-6000)	A4, Letter, Legal, A5, A6, B5 (ISO), B6 (ISO), Executive, Folio
	Automatic duplex printing	A4, Letter, Legal

** Up to 10 sheets

Supplies

Toner	7,500 pages A4/Letter pages @ 5 % coverage
Drum	30,000 pages A4/Letter pages (1 page / job)

Dimensions / Weights

Dimensions (W x D x H)	392 x 425 x 310 mm (15.4 x 16.7 x 12.2 in.)
Weights	20.3 kg (44.8 lb)

General

Power source	USA and Canada: AC 100 to 120 V, 50/60 Hz Europe and Australia: AC 220 to 240 V, 50/60 Hz	
Power consumption	Printing	Less than 600 W at 25 °C (77 °F)
	Standby	Less than 90 W at 25 °C (77 °F)
	Sleep	Less than 10 W (For HL-6050DN) Less than 8 W (For HL-6050 and HL-6050D)
	Off	Less than 2 W (The only way to achieve 0 W power consumption is to unplug the power cord from the AC outlet/socket.)
Sound power	Printing	LWAd = 6.6 Bell (A) or less (You might want to install printers with a sound power level of LWAd 6.3 Bell (A) or more in a separate room or cubicle.)
	Standby	LWAd = 4.9 Bell (A) or less
Sound pressure	Printing	52 dB (A) or less
	Standby	39 dB (A) or less
Ecology	Power save	Yes
	Toner save	Yes
Temperature	Operating: 10 to 32.5 °C (50 to 90.5 °F) Storage: 0 to 35 °C (32 to 95 °F).	
Humidity	Operating: 20 to 80% (without condensation) Storage: 10 to 85% (without condensation)	

System requirements

Computer Platform & Operating System Version		Processor Speed	Minimum RAM	Recommended RAM	Available Hard Disk Space
Windows®	95*, 98, 98SE	486/66 MHz	8 MB	16 MB	40 MB
	NT® Workstation 4.0*	Pentium 75 MHz	16 MB	32 MB	50 MB
	2000 Professional	Pentium 133 MHz	64 MB	128 MB	50 MB
	Me	Pentium 150 MHz	32 MB	64 MB	50 MB
	XP	Pentium 300 MHz	128 MB	128 MB	50 MB
Apple® Macintosh®**	OS® 8.6 - 9.2	All base models meet minimum requirements.	32 MB	64 MB	50 MB
	OS® X 10.1 - 10.2.1 or greater		128 MB	160 MB	

* USB is not supported under Windows® 95 or Windows NT®4.0.

** Power Macintosh with an Apple original pre-installed USB port.

Important information for choosing your paper

This section provides information to help you choose paper to use with this printer.

Before you purchase a large quantity of paper

Make sure the paper is suitable for the printer.

Paper for plain paper copies

Paper is divided by usage, such as paper for printing and paper for copying. The usage is usually specified on the paper's package. Check the package to see whether it is suitable for laser printers. Use paper that is suitable for laser printers.

Basis weight

The basis weight of the paper in general use varies in different countries. We recommend that you use paper that weighs 75 g/m^2 to 90 g/m^2 (20 to 24 lb), although this printer is able to cope with thinner or thicker paper than these weights.

Unit	Europe	USA
g/m^2	80 to 90	75 to 90
lb		20 to 24

Long grain and short grain

The pulp fiber of the paper is aligned during paper manufacture. What we call long grain paper is paper where the fiber is parallel to the paper carriage direction of the paper.

Paper can be classified into two types, long grain and short grain. Long grain paper's fiber direction is parallel to the carriage direction of the paper in the printer. Short grain paper's fiber direction is vertical to the carriage direction of the paper in the printer. Though most plain paper for copying is long grain, some is short grain. We recommend that you use long grain paper for this printer. Short grain paper is too weak for the paper carriage of the printer.

Acid paper and neutralized paper

Paper can be classified as either acid paper or neutralized paper.

Though modern paper manufacture methods started with acid paper, recently neutralized paper is taking the place of acid paper because of environment or preservation issues.

However, many forms of acid paper can be found in recycled paper. We recommend that you use neutralized paper for this printer.

You can use an acid paper check pen to distinguish acid paper from neutral paper.

Print surface

The characteristics may differ a little between the face side and reverse side of a sheet of paper.

Usually, the opening side of the ream of paper package is the print side. Follow any indication of the print side on the paper package. Typically, the print side is indicated by an arrow.

Moisture content

Moisture content is the amount of water left in the paper after manufacture. It is one of the important characteristics of the paper. This can change greatly depending on the storage environment, although usually paper contains about 5% water by weight. Because paper often absorbs water, the amount of water can sometimes be about 10% in a high humidity environment. When the amount of water increases, the characteristic of the paper changes greatly. The fixing of the toner may become worse. For storage of the paper and during use, we recommend that the humidity of the surrounding environment is between 50% and 60%.

Rough estimate of basis weight

g/m^2	lb	
	Bond	**Index**
60	16	
64	17	
75	20	
90	24	
105	28	
120	32	
135	36	
161	43	90

Paper size

Letter		8.5 × 11 in.
Legal		8.5 × 14 in.
Executive		7.25 × 10.5 in.
A4	210 × 297 mm	
A5	148 × 210 mm	
A6	105 × 148 mm	
Envelope Monarch		3.875 × 7.5 in.
Envelope #9		3.875 × 8.9 in.
Envelope #10		4.12 × 9.5 in.
Envelope #11		4.5 × 10.375 in.
Envelope DL	110 × 220 mm	
Envelope C5	162 × 229 mm	
Envelope C6	114 × 162 mm	
Envelope B5 (ISO)	176 × 250 mm	
Envelope B6	176 × 125 mm	
Folio		8.5 × 13 in.

Quick reference for bar code control commands

The printer can print bar codes in the HP LaserJet, EPSON FX-850, and IBM Proprinter XL emulation modes.

Print bar codes or expanded characters

Code	ESC i
Dec	27 105
Hex	1B 69

Format: ESC i n ... n \

Creates bar codes or expanded characters according to the segment of parameters "n ... n". For more information about parameters, see the following Definition of Parameters. This command must end with the “ \ “ code (5CH).

Definition of Parameters

This bar code command can have the following parameters in the parameter segment (n ... n). As parameters are effective within the single command syntax ESC i n ... n \, they don't apply in the bar code commands. If certain parameters are not given, they take the preset settings. The last parameter must be the bar code data start ('b' or 'B') or the expanded character data start ('l' or 'L'). Other parameters can be given in any sequence. Each parameter can start with a lower-case or upper-case character, for example, 't0' or 'T0', 's3' or 'S3' and so one.

Bar code mode

n = 't0' or 'T0	CODE 39 (default)
n = 't1' or 'T1	Interleaved 2 of 5
n = 't3' or 'T3'	FIM (US-Post Net)
n = 't4' or 'T4'	Post Net (US-Post Net)
n = 't5' or 'T5	EAN 8, EAN 13, or UPC A
n = 't6' or 'T6	UPC E
n = 't9' or 'T9	Codabar
n = 't12' or 'T12	Code 128 set A
n = 't13' or 'T13	Code 128 set B
n = 't14' or 'T14	Code 128 set C
n = 't130' or 'T130	ISBN (EAN)
n = 't131' or 'T131	ISBN (UPC-E)
n = 't132' or 'T132	EAN 128 set A
n = 't133' or 'T133	EAN 128 set B
n = 't134' or 'T134	EAN 128 set C

This parameter selects the bar code mode as shown above. When n is 't5' or 'T5' the bar code mode (EAN 8, EAN 13, or UPC A) varies according to the number of characters in the data.

Bar Code, expanded character, line block drawing and box drawing

n = 's0' or 'S0 3: 1 (default)

n = 's1' or 'S1 2: 1

n = 's3' or 'S3 2.5: 1

This parameter selects the bar code style as above. When the EAN 8, EAN 13, UPC-A, Code 128 or EAN 128 bar code mode is selected, this bar code style parameter is ignored.

Expanded Character

'S'

0 = White

1 = Black

2 = Vertical stripes

3 = Horizontal stripes

4 = Cross hatch

For example 'S' n1 n2

n1 = Background fill pattern

n2 = Foreground fill pattern

If 'S' is followed by only one parameter, the parameter is a foreground fill pattern.

Line block drawing & box drawing

"S"

1 = Black

2 = Vertical stripes

3 = Horizontal stripes

4 = Cross hatch

Bar Code

n = 'mnnn' or 'Mnnn' (nnn = 0 ~ 32767)

This parameter shows the bar code width. The unit of 'nnn' is a percentage.

Bar code human readable line ON or OFF

n = 'r0' or 'R0 Human readable line OFF

n = 'r1' or 'R1 Human readable line ON

Preset: Human readable line ON
(1) 'T5' or 't5'
(2) 'T6' or 't6'
(3) 'T130' or 't130'
(4) 'T131' or 't131'

Preset: Human readable line OFF
All others

This parameter shows whether or not the printer prints the human readable line below the bar code. Human readable characters are always printed with OCR-B font of 10 pitch and all the current character style enhancements are masked. The factory setting is determined by the bar code mode selected by 't' or 'T'.

Quiet zone

n = 'onnn' or 'Onnn' (nnn = 0 ~ 32767)

Quiet zone is the space on both sides of the bar codes. Its width can be shown using the units that are set by the 'u' of 'U' parameter. (For the description of 'u' or 'U' parameter, see the next section.) The factory setting of the quiet-zone width is 1 inch.

Bar code, expanded character unit, line block drawing and box drawing

n = 'u0' or 'U0 mm (preset)

n = 'u1' or 'U1 1/10

n = 'u2' or 'U2 1/100

n = 'u3' or 'U3 1/12

n = 'u4' or 'U4 1/120

n = 'u5' or 'U5 1/10 mm

n = 'u6' or 'U6 1/300

n = 'u7' or 'U7 1/720

This parameter shows the measurement units of X-axis offset, Y-axis offset, and bar code height.

Bar code, expanded character, line block drawing and box drawing offset in X-axis

n = 'xnnn' or 'Xnnn'

This parameter shows the offset from the left margin in the 'u'- or 'U'-specified unit.

Bar code & expanded character offset in Y-axis

n = 'ynnn' or 'Ynnn'

This parameter shows the downward offset from the current print position in the 'u'- or 'U'-specified unit.

Bar code, expanded character, line block drawing and box drawing height

n = 'hnnn', 'Hnnn', 'dnnn', or 'Dnnn'

(1)EAN13, EAN8, UPC-A, ISBN (EAN13, EAN8, UPC-A),
ISBN (UPC-E): 22 mm

(2) UPC-E: 18 mm

(3) Others: 12 mm

Expanded characters →2.2 mm (preset)

Line block drawing and box drawing →1 dot

This parameter shows the height of bar codes or expanded characters as shown above. It can start with 'h', 'H', 'd', or 'D'. The height of bar codes is shown in the 'u'- or 'U'-specified unit. The factory setting of the bar code height (12 mm, 18 mm or 22 mm) is determined by the bar code mode selected by 't' or 'T'.

Expanded character width, line block drawing and box drawing

n = 'wnnn' or 'Wnnn'

Expanded character→1.2 mm

Line block drawing and box drawing→1 dot

This parameter shows the width of expanded characters as shown above.

Expanded character rotation

n = 'a0' or 'A1 'Upright (preset)

n = 'a1' or 'A1 'Rotated 90 degrees

n = 'a2' or 'A2 'Upside down, rotated 180 degrees

n = 'a3' or 'A3 'Rotated 270 degrees

Bar code data start

n = "b" or "B"

Data that follows 'b' or 'B' is read in as bar code data. Bar code data must end with the ' \ ' code (5CH), which also ends this command. The acceptable bar code data is determined by the bar code mode selected by 't' or 'T'.

■ When CODE 39 is selected with the parameter 't0' or 'T0'

Forty three characters '0' to '9', 'A' to 'Z', '-', ' . ', ' (space)', '$', ' / ', '+', and '%' can be accepted as bar code data. Other characters will cause a data error. The number of characters for bar codes is not limited. The bar code data automatically starts and ends with an asterisk ' * ' (start character and stop character). If the received data has an asterisk ' * ' at the beginning or end, the asterisk is regarded as a start character or stop character.

■ When Interleaved 2 of 5 is selected with the parameter 't1' or 'T1':

Ten numerical characters '0' to '9' can be accepted as bar code data. Other characters cause a data error. The number of characters for bar codes is not limited. Because this mode of bar codes needs even characters, if the bar code data has odd characters, '0' is automatically added to the end of the bar code data.

■ When FIM (US-Post Net) is selected with the parameter 't3' or 'T3'

Characters 'A' to 'D' are valid and one digit of data can be printed. Upper-case and lower-case alphabet characters can be accepted.

■ When Post Net (US-Post Net) is selected with the parameter 't4' or 'T4'

Numbers '0' to '9' can be data and it must end with a check digit. '?' can be used instead of the check digit.

■ When EAN 8, EAN 13, or UPC A is selected with the parameter 't5' or 'T5'

Ten numbers '0' to '9' can be accepted as bar code data. The number of characters for bar codes is limited as follows:

EAN 8: Total 8 digits (7 digits + 1 check digit)
EAN 13: Total 13 digits (12 digits + 1 check digit)
UPC A: Total 12 digits (11 digits + 1 check digit)

A number of characters other than above will cause data error that results in the bar code data being printed as normal print data. If the check digit is not correct, the printer calculates the correct check digit automatically so that the correct bar code data will be printed. When EAN13 is selected, adding '+' and a two-digit or five-digit number after the data can create an add-on code.

■ When UPC-E is selected with the parameter “t6” or "T6":

The numbers '0' to '9' can be accepted as bar code data.

1 Eight digits (standard format) The first character must be '0' and the data must end with a check digit. Total eight digits = '0' plus 6 digits plus 1 check digit.
2 Six digits The first character and the last check digit are removed from the eight digit data.

1: For eight digits, '?' can be used instead of a check digit.
2: Adding '+' and two-digit or five-digit number after the data creates an add-on code for all six and eight digit formats.

- When Codebar is chosen with the parameter 't9' or 'T9'

Characters '0' to '9', '-', ' . ', '$', '/', '+', ' : ' can be printed. Characters 'A' to 'D' can be printed as a start-stop code, which can be upper case or lower case. If there is no start-stop code, errors will happen. A check digit cannot be added and using '?' causes errors.

- When Code 128 Set A, Set B, or Set C is selected with the parameter 't12' or 'T12,' 't13' or 'T13,' or 't14' or 'T14'

Code 128 sets A, B and C can be individually selected. Set A indicates characters Hex 00 to 5F. Set B includes characters Hex 20 to 7F. Set C includes the pairs 00 to 99. Switching is allowed between the code sets by sending %A, %B, or %C. FNC 1, 2, 3, and 4 are produced with %1, %2, %3, and %4. The SHIFT code, %S, allows temporary switching (for one character only) from set A to set B and vice versa. The '%' character can be encoded by sending it twice.

- When ISBN (EAN) is selected with the parameter 't130' or 'T130'

The same rules apply as for 't5' or 'T5'.

- When ISBN (UPC-E) is selected with the parameter 't131' or 'T131':

The same rules apply as for 't6' or 'T6'.

- When EAN 128 set A, set B or set C is selected with the parameter 't132' or 'T132', 't133' or 'T133' or 't134' or 'T134'

The same rules apply as for 't12' or 'T12', 't13' or 'T13', or 't14' or 'T14'.

Box drawing

ESC i ... E (or e)

'E' or 'e' is a terminator.

Line block drawing

ESC i ... V (or v)

'V' or 'v' is a terminator.

Expanded character data start

n = 'l' or 'L'

Data that follows 'l' or 'L' is read as expanded character data (or labeling data). Expanded character data must end with the ' \ ' code (5CH), which also ends this command.

Example Program Listings

```
WIDTH "LPT1:",255

'CODE 39
LPRINT CHR$(27);"it0r1s0o0x00y00bCODE39?\";

'Interleaved 2 of 5
LPRINT CHR$(27);"it1r1s0o0x00y20b123456?\";

'FIM
LPRINT CHR$(27);"it3r1o0x00y40bA\";

'Post Net
LPRINT CHR$(27);"it4r1o0x00y60b1234567890?\";

'EAN-8
LPRINT CHR$(27);"it5r1o0x00y70b1234567?\";

'UPC-A
LPRINT CHR$(27);"it5r1o0x50y70b12345678901?\";

'EAN-13
LPRINT CHR$(27);"it5r1o0x100y70b123456789012?\";

'UPC-E
LPRINT CHR$(27);"it6r1o0x150y70b0123456?\";

'Codabar
LPRINT CHR$(27);"it9r1s0o0x00y100bA123456A\";

'Code 128 set A
LPRINT CHR$(27);"it12r1o0x00y120bCODE128A12345?\";

'Code 128 set B
LPRINT CHR$(27);"it13r1o0x00y140bCODE128B12345?\";

'Code 128 set C
LPRINT CHR$(27);"it14r1o0x00y160b";CHR$(1);CHR$(2);"?\";

'ISBN(EAN)
LPRINTCHR$(27);"it130r1o0x00y180b123456789012?+12345\";

'EAN 128 set A
LPRINT CHR$(27);"it132r1o0x00y210b1234567890?\";

LPRINT CHR$(12)
END
```

B Appendix (For Europe and Other Countries)

Brother Numbers

IMPORTANT: For technical and operational help, you must call the country where you bought the printer. Calls must be made *from within* that country.

Register your product

By registering your Brother product, you will be recorded as the original owner of the product.

Your registration with Brother:

- may serve as a confirmation of the purchase date of your product should you lose your receipt;
- may support an insurance claim by you in the event of product loss covered by insurance; and,
- will help us to notify you of enhancements to your product and special offers.

Please complete the Brother Warranty Registration or, for your convenience and the most efficient way to register your new product, register on-line at

http://www.brother.com/registration/

Frequently asked questions (FAQs)

The Brother Solutions Center is our one-stop resource for all your printer needs. You can download the latest drivers, software and utilities, read FAQs and troubleshooting tips, and go to the *Solutions* section to learn how to get the most from your Brother product.

http://solutions.brother.com

You can check here for the Brother driver updates.

Customer Service

Visit http://www.brother.com or contact information on your local Brother office.

Service center locations

For service centres in Europe, contact your local Brother office. Address and telephone contact information for European offices can be found at http://www.brother.com by selecting your country.

Internet Addresses

Brother Global Web Site: http://www.brother.com

For Frequently Asked Questions (FAQs), Product Support and Technical Questions, Driver Updates and Utilities: http://solutions.brother.com

Important information: Regulations

Radio interference (220 to 240 volt model only)

This printer follows EN55022 (CISPR Publication 22)/Class B.

Before you use this product, make sure that you use the following interface cables.

1 A shielded parallel interface cable with twisted-pair conductors and that it is marked IEEE1284 compliant.
2 A USB cable.

The cable must not be more than 2 meters long.

IEC 60825 specification (220 to 240 volt model only)

This printer is a Class 1 laser product as defined in IEC 60825 specifications. The label shown below is attached in countries where it is needed.

This printer has a Class 3B laser diode which produces invisible laser radiation in the scanner unit. You should not open the scanner unit under any circumstances.

Caution: Use of controls or adjustments or performance of procedures other than those specified in this User's Guide may result in hazardous radiation exposure.

For Finland and Sweden
LUOKAN 1 LASERLAITE
KLASS 1 LASER APPARAT

Varoitus! Laitteen käyttäminen muulla kuin tässä käyttöohjeessa mainitulla tavalla saattaa altistaa käyttäjän turvallisuusluokan 1 ylittävälle näkymättömälle lasersäteilylle.

Varning *Om apparaten används på annat sätt än i denna Bruksanvisning specificerats, kan användaren utsättas för osynlig laserstrålning, som överskrider gränsen för laserklass 1.*

Internal laser radiation

Maximum radiation power:	15 mW
Wave length:	760 - 810 nm
Laser class:	Class 3B (Accordance with IEC 60825)

IMPORTANT - For Your Safety

To ensure safe operation the supplied three-pin plug must be inserted only into a standard three-pin power outlet that is properly grounded through the standard electrical wiring.

Extension cords used with this printer must be three-pin plug type and correctly wired to provide proper grounding. Incorrectly wired extension cords may cause personal injury and equipment damage.

The fact that the equipment operates satisfactorily does not imply that the power is grounded and that the installation is completely safe. For your safety, if in any doubt about the effective grounding of the power, call a qualified electrician.

Disconnect device

You must install this printer near a power outlet that is easily accessible. In case of an emergency, you must disconnect the power cord from the power outlet to shut off the power completely.

Caution for LAN connection (For model HL-6050DN only)

Connect this product to a LAN connection that is not subjected to overvoltages.

IT power system (For Norway only)

This product is also designed for an IT power system with phase-to-phase voltage 230V.

Geräuschemission / Acoustic noise emission (for Germany only)

Lpa < 70 dB (A) DIN 45635-19-01-KL2

Wiring information (for UK)

Important

If you need to replace the plug fuse, fit a fuse that is approved by ASTA to BS1362 with the same rating as the original fuse.

Always replace the fuse cover. Never use a plug that does not have a cover.

Warning - This printer must be earthed.

The wires in the mains lead are coloured in line with the following code:

Green and Yellow: Earth

Blue: Neutral

Brown: Live

If in any doubt, call a qualified electrician.

EC Declaration of Conformity

Manufacturer
Brother Industries Ltd.,
15-1, Naeshiro-cho, Mizuho-ku,
Nagoya 467-8561, Japan

Plant
Brother Technology (Shenzhen) Ltd.
NO6 Gold Garden Ind. Nanling Buji, Longgang,
Shenzhen, China

Herewith declare that:

Product description	: Laser Printer
Product Name	: HL-6050, HL-6050D, HL-6050DN
Model Number	: HL-60

are in conformity with provisions of the Directives applied: Low Voltage Directive 73/23/EEC (as amended by 93/68/EEC) and the Electromagnetic Compatibility Directive 89/336/EEC (as amended by 91/263/EEC and 92/31/EEC and 93/68/EEC).

Standards applied:

Harmonized:	Safety	: EN60950:2000
	EMC	: EN55022:1998 Class B EN55024:1998 EN61000-3-2:1995 + A14:2000 EN61000-3-3:1995

Year in which CE marking was first affixed: 2003

Issued by	: Brother Industries, Ltd.
Date	: 6 August, 2003
Place	: Nagoya, Japan
Signature	:

Takashi Maeda

Takashi Maeda
Manager
Quality Management Group
Quality Management Dept.
Information & Document Company

C Appendix (For USA and Canada)

Brother Numbers

IMPORTANT: For technical and operational help, you must call the country where you bought the printer. Calls must be made *from within* that country.

Register your product

By registering your product with Brother International Corporation, you will be recorded as the original owner of the product.

Your registration with Brother:

- may serve as a confirmation of the purchase date of your product should you lose your receipt;
- may support an insurance claim by you in the event of product loss covered by insurance; and,
- will help us notify you of enhancements to your product and special offers.

Please complete the Brother Warranty Registration or, for your convenience and most efficient way to register your new product, register on-line at

http://www.brother.com/registration/

Frequently asked questions (FAQs)

The Brother Solutions Center is our one-stop resource for all your Printer needs. You can download the latest software and utilities, read FAQs and troubleshooting tips, and go to the 'Solutions' section to learn how to get the most from your Brother product.

http://solutions.brother.com

You can check here for the Brother driver updates.

Customer Service

In USA: 1-800-276-7746

In Canada: 1-877-BROTHER

If you have comments or suggestions, please write us at:

In USA: Printer Customer Support
Brother International Corporation
15 Musick
Irvine, CA 92618

In Canada: Brother International Corporation (Canada), Ltd.
- Marketing Dept.
1, rue Hotel de Ville
Dollard-des-Ormeaux, PQ, Canada H9B 3H6

Service center locator (USA only)

For the location of a Brother authorized service center, call 1-800-284-4357.

Service center locations (Canada only)

For the location of a Brother authorized service center, call 1-877-BROTHER

Brother fax back system (USA only)

Brother has installed an easy to use fax back system so you can get instant answers to common technical questions and product information. This is available 24 hours a day, 7 days a week. You can use the system to send the information to any fax machine.

Call the number below and follow the recorded instructions to receive a fax about how to use the system and an index of fax back subjects.

In USA only:1-800-521-2846

Internet Addresses

Brother Global Web Site: http://www.brother.com

For Frequently Asked Questions (FAQs), Product Support and Technical Questions, and Driver Updates and Utilities: http://solutions.brother.com

(In USA Only) For Brother Accessories & Supplies: http://www.brothermall.com

Important information: Regulations

Federal Communications Commission (FCC) Declaration of Conformity (For USA)

Responsible Party: Brother International Corporation
100 Somerset Corporate Boulevard
P.O. Box 6911
Bridgewater, NJ 08807-0911
USA
Telephone: (908) 704-1700

declares, that the products

Product name: Laser Printer HL-6050D and HL-6050DN
Model number: HL-60
Product options: Lower Tray Unit LT-6000, Network Board NC-6100h

complies with Part 15 of the FCC Rules. Operation is subject to the following two conditions: (1) This device may not cause harmful interference, and (2) this device must accept any interference received, including interference that may cause undesired operation.

This equipment has been tested and found to comply with the limits for a Class B digital device, pursuant to Part 15 of the FCC Rules. These limits are designed to provide reasonable protection against harmful interference in a residential installation. This equipment generates, uses, and can radiate radio frequency energy and, if not installed and used in accordance with the instructions, may cause harmful interference to radio communications. However, there is no guarantee that interference will not occur in a particular installation. If this equipment does cause harmful interference to radio or television reception, which can be determined by turning the equipment off and on, the user is encouraged to try to correct the interference by one or more of the following measures:

- Reorient or relocate the receiving antenna.
- Increase the separation between the equipment and receiver.
- Connect the equipment into an outlet on a circuit different from that to which the receiver is connected.
- Call the dealer, Brother Customer Service or an experienced radio/TV technician for help.

Important

A shielded interface cable should be used to ensure compliance with the limits for a Class B digital device.

Changes or modifications not expressly approved by Brother Industries, Ltd. could void the user's authority to operate the equipment.

Industry Canada Compliance Statement (For Canada)

This Class B digital apparatus complies with Canadian ICES-003.

Cet appareil numérique de la classe B est conforme à la norme NMB-003 du Canada.

Laser Notice

Laser Safety (100 to 120 volt model only)

This printer is certified as a Class I laser product under the U.S. Department of Health and Human Services (DHHS) Radiation Performance Standard according to the Radiation Control for Health and Safety Act of 1968. This means that the printer does not produce hazardous laser radiation.

Since radiation emitted inside the printer is completely confined within protective housings and external covers, the laser beam cannot escape from the machine during any phase of user operation.

FDA Regulations (100 to 120 volt model only)

U.S. Food and Drug Administration (FDA) has implemented regulations for laser products manufactured on and after August 2, 1976. Compliance is mandatory for products marketed in the United States. One of the following labels on the back of the printer indicates compliance with the FDA regulations and must be attached to laser products marketed in the United States.

MANUFACTURED:
Brother Industries, Ltd.,
15-1 Naeshiro-cho Mizuho-ku Nagoya, 467-8561 Japan
This product complies with FDA radiation performance standards, 21 CFR subchapter J.

MANUFACTURED:
Brother Technology (Shenzhen) Ltd.
NO6 Gold Garden Ind. Nanling Buji, Longgang, Shenzhen, CHINA
This product complies with FDA radiation performance standards, 21 CFR Subchapter J

Caution: Use of controls, adjustments or performance of procedures other than those specified in this User's Guide may result in hazardous radiation exposure.

Internal laser radiation

Maximum radiation power:	15 mW
Wave length:	760 - 810 nm
Laser class:	Class IIIb (Accordance with 21 CFR Part 1040.10)

IMPORTANT - For Your Safety

To ensure safe operation the supplied three-pin plug must be inserted only into a standard three-pin power outlet that is properly grounded through the standard electrical wiring.

Extension cords used with this printer must be three-pin plug type and correctly wired to provide proper grounding. Incorrectly wired extension cords may cause personal injury and equipment damage.

The fact that the equipment operates satisfactorily does not imply that the power is grounded and that the installation is completely safe. For your safety, if in any doubt about the effective grounding of the power, call a qualified electrician.

Disconnect device

You must install this printer near a power outlet that is easily accessible. In case of an emergency, you must disconnect the power cord from the power outlet to shut off the power completely.

Caution for LAN connection (For model HL-6050DN only)

Connect this product to a LAN connection that is not subjected to overvoltages.

Index

Symbols

+ or - buttons 3-7

A

Accessories and supplies C-2
Accessories tab 2-8
Automatic emulation selection 2-20
Automatic Interface Selection 2-20

B

Back button 3-7
Back light 3-9
Bar code control A-7
Bar code package (option) 4-15
BRAdmin Professional 2-19
Brother Solutions Center 2-1
BR-Script 2-1
BR-Script 3 menu 3-19
BR-Script 3 mode 3-23
BR-Script 3 problems 6-23
BR-Script printer driver 2-10
Buttons 3-2

C

Call Service messages 6-3
Carbon copy printing 1-42
Carton contents 1-1
CompactFlash card (option) 4-9
Control panel 3-1
Corona wire 5-7

D

Data lamp 3-8
Delete storage 3-16
Device Options 2-5
DIMM memory (option) 4-11
DOS 6-23
Drum unit 5-1, 5-4
Duplex printing 1-35, 2-4

E

Envelopes 1-21, 1-23
EPSON FX-850 mode 3-23
Error messages 6-1

F

Factory settings 3-24
Fonts package (optoion) 4-15

G

Go button 3-2

H

HP LaserJet mode 3-23

I

INFORMATION menu 3-14
INTERFACE menu 3-21, 3-27

J

Jam at paper exit 6-12
Jam in duplex unit 6-15
Jam in MP tray 6-6
Jam inside printer 6-9
Job Cancel button 3-2

L

LCD (liquid crystal display) 3-9
LCD menu 3-13
LED (light emitting diode) 3-8
Lower tray unit (option) 4-2

M

Macintosh® 2-1, 2-16
Maintenance messages 6-3
Manual feed tray 1-2
Memory 4-11
MIO interface 2-20
Modes 3-23
Multi-purpose tray (MP tray) .....
..... 1-2, 1-13, 1-17, 1-36

N

NETWORK menu 3-20, 3-27
Network Print Server (NC-6100h) 4-3
Network software 2-19

O

Options 4-1

P

Paper 1-5, A-5
Paper jams 6-5
PAPER menu 3-15, 3-25
Parallel cable 1-1
Parallel interface 2-20
PCL printer driver 2-2
Plain paper 1-7
Power supply 1-4
Print media 1-5

PRINT menu 3-25, 3-26
PRINT MENU menu 3-17
Print quality 2-4, 6-17
Printable area 1-8
Printer driver 2-1, 2-10
Printer parts 1-2, 1-3
Proof data 3-4
Proprinter XL mode 3-23
PS printer driver 2-1, 2-10
Public data 3-5

Q

QUALITY menu 3-15, 3-25

R

RAM 4-11
Recommended paper 1-7
Register your printer B-1, C-1
Reprint button 3-2, 3-3
RESET menu 3-21

S

Secure data 3-5
SETUP menu 3-16, 3-25
Software 2-19
Status Monitor 2-6

T

TCP/IP 3-20
Thick paper 1-17
Toner cartridge 5-1

W

Watermark 2-4
Wireless Print Server (NC-7100w) 4-6