Online User's Guide

HL-L3210CW
HL-L3230CDN
HL-L3230CDW
HL-L3270CDW

© 2018 Brother Industries, Ltd. All rights reserved.

Table of Contents

Before You Use Your Brother Machine 1
Definitions of Notes 2
Notice - Disclaimer of Warranties (USA and Canada) 3
Trademarks 4
Important Note 5
Introduction to Your Brother Machine 6
Before Using Your Machine 7
Front View and Back View 8
Control Panel Overview 10
Touchscreen LCD Overview 14
How to Navigate the Touchscreen LCD 16
Access Brother Utilities (Windows) 18
Uninstall the Brother Software and Drivers (Windows) 20
Paper Handling 21
Load Paper 22
Load and Print Using the Paper Tray 23
Load and Print Paper in the Manual Feed Slot 27
Paper Settings 34
Change the Paper Size and Paper Type 35
Change the Check Paper Size Setting 36
Unprintable Area 37
Recommended Print Media 38
Using Special Paper 39
Print 40
Print from Your Computer (Windows) 41
Print a Document (Windows) 42
Print Settings (Windows) 44
Secure Print (Windows) 48
Change the Default Print Settings (Windows) 50
Print a Document Using the BR-Script3 Printer Driver (PostScript® 3™ Language Emulation) (Windows) 51
Monitor the Status of the Machine from Your Computer (Windows) 52
Print from Your Computer (Mac) 53
Print a Document (Mac) 54
Print Options (Mac) 55
Secure Print (Mac) 61
Print a Document Using the BR-Script3 Printer Driver (PostScript® 3™ language emulation) (Mac) 63
Monitor the Status of the Machine from Your Computer (Mac) 64
Cancel a Print Job 65
Test Print 66
Network 67
Configure Network Details Using the Control Panel 68
Supported Basic Network Features 69
Network Management Software and Utilities 70

Learn about Network Management Software and Utilities 71
Additional Methods of Configuring Your Brother Machine for a Wireless Network 72
Before Configuring Your Brother Machine for a Wireless Network 73
Configure Your Machine for a Wireless Network 74
Configure Your Machine for a Wireless Network Using the One Push Method of Wi-Fi Protected Setup™ (WPS) 75
Configure Your Machine for a Wireless Network Using the PIN Method of Wi-Fi Protected Setup™ (WPS) 77
Configure Your Machine for a Wireless Network Using the Machine's Control Panel Setup Wizard 81
Configure Your Machine for a Wireless Network When the SSID Is Not Broadcast 84
Configure Your Machine for an Enterprise Wireless Network 87
Use Wi-Fi Direct® 91
Advanced Network Features 105
Print the Network Configuration Report 106
Print the WLAN Report 107
Configure the SNTP Protocol Using Web Based Management 110
Technical Information for Advanced Users 111
Reset the Network Settings to the Factory Settings 112
Security 113
Lock the Machine Settings 114
Setting Lock Overview 115
Network Security Features 119
Before Using Network Security Features 120
Secure Function Lock 3.0 121
Manage Your Network Machine Securely Using SSL/TLS 126
Send an Email Securely 156
Use IEEE 802.1x Authentication for a Wired or a Wireless Network 160
Store Print Log to Network 165
Mobile/Web Connect 170
Brother Web Connect 171
Brother Web Connect Overview 172
Online Services Used with Brother Web Connect 173
Conditions for Using Brother Web Connect 175
Set Up Brother Web Connect 179
Download and Print Documents Using Brother Web Connect 187
Google Cloud Print 189
Google Cloud Print Overview 190
Before Using Google Cloud Print 191
Print from Google Chrome™ or Chrome OS™ 195
Print from Google Drive™ for Mobile 196
Print from Gmail™ Webmail Service for Mobile 197
AirPrint 198
AirPrint Overview 199
Before Using AirPrint (macOS) 200
Print Using AirPrint 201
Mobile Printing for Windows 204
Mopria® Print Service 205

Brother iPrint&Scan for Mobile Devices 206
Near-Field Communication (NFC) 207
Brother iPrint&Scan for Windows and Mac 208
Brother iPrint&Scan Overview 209
Troubleshooting 210
Error and Maintenance Messages 211
Error Messages When Using the Brother Web Connect Feature 219
Paper Jams 221
Paper is Jammed in the Manual Feed Slot 222
Paper is Jammed in the Paper Tray 223
Paper is Jammed in the Back of the Machine 225
Paper is Jammed Inside the Machine 227
Paper is Jammed underneath the Paper Tray 230
Printing Problems 232
Improve the Print Quality 235
Network Problems 240
Error Messages 241
Use the Network Connection Repair Tool (Windows) 244
Where Can I Find My Brother Machine's Network Settings? 245
I Cannot Complete the Wireless Network Setup Configuration 246
My Brother Machine Cannot Print over the Network 248
I Want to Check that My Network Devices are Working Correctly 250
Google Cloud Print Problems 251
AirPrint Problems 252
Other Problems 253
Check the Machine Information 255
Reset Functions 256
Machine Reset 257
Network Reset 258
Factory Reset 259
Routine Maintenance 260
Replace Supplies 261
Replace the Toner Cartridge 263
Replace the Drum Unit 267
Replace the Belt Unit 272
Replace the Waste Toner Box 276
Clean the Machine 281
Clean the LED Heads 283
Clean the Touchscreen LCD 284
Clean the Corona Wires 285
Clean the Drum Unit 288
Clean the Paper Pick-up Rollers 298
Calibrate Color Output 299
Reset the Machine's Calibration Settings 300
Correct Color Print Alignment (Color Registration) 301
Check the Remaining Part Life 302
Pack and Ship Your Brother Machine 303

Replace Periodic Maintenance Parts 305
Machine Settings 306
Change Machine Settings from the Control Panel 307
General Settings 308
Settings and Features Tables 317
Change Machine Settings from Your Computer 334
Change Machine Settings Using Web Based Management 335
Appendix 339
Specifications 340
How to Enter Text on Your Brother Machine 346
Supplies 348
Important Information About Toner Cartridge Life 350
Brother Numbers 351

Before You Use Your Brother Machine

- Definitions of Notes
- Notice - Disclaimer of Warranties (USA and Canada)
- Trademarks
- Important Note

Definitions of Notes

We use the following symbols and conventions throughout this User's Guide:

WARNING	WARNING indicates a potentially hazardous situation which, if not avoided, could result in death or serious injuries.
CAUTION	CAUTION indicates a potentially hazardous situation which, if not avoided, may result in minor or moderate injuries.
IMPORTANT	IMPORTANT indicates a potentially hazardous situation which, if not avoided, may result in damage to property or loss of product functionality.
NOTE	NOTE specifies the operating environment, conditions for installation, or special conditions of use.
	Tips icons indicate helpful hints and supplementary information.
	Electrical Hazard icons alert you to possible electrical shock.
	Fire Hazard icons alert you to the possibility of a fire.
	Hot Surface icons warn you not to touch hot machine parts.
	Prohibition icons indicate actions you must not perform.
Bold	Bold style identifies buttons on the machine's control panel or computer screen.
Italics	Italicized style emphasizes an important point or refers you to a related topic.
`Courier New`	Courier New font identifies messages shown on the machine's LCD.

Related Information

- Before You Use Your Brother Machine

Notice - Disclaimer of Warranties (USA and Canada)

BROTHER'S LICENSOR(S), AND THEIR DIRECTORS, OFFICERS, EMPLOYEES OR AGENTS (COLLECTIVELY BROTHER'S LICENSOR) MAKE NO WARRANTIES, EXPRESS OR IMPLIED, INCLUDING WITHOUT LIMITATION THE IMPLIED WARRANTIES OF MERCHANTABILITY AND FITNESS FOR A PARTICULAR PURPOSE, REGARDING THE SOFTWARE. BROTHER'S LICENSOR(S) DOES NOT WARRANT, GUARANTEE OR MAKE ANY REPRESENTATIONS REGARDING THE USE OR THE RESULTS OF THE USE OF THE SOFTWARE IN TERMS OF ITS CORRECTNESS, ACCURACY, RELIABILITY, CURRENTNESS OR OTHERWISE. THE ENTIRE RISK AS TO THE RESULTS AND PERFORMANCE OF THE SOFTWARE IS ASSUMED BY YOU. THE EXCLUSION OF IMPLIED WARRANTIES IS NOT PERMITTED BY SOME STATES IN THE USA AND SOME PROVINCES IN CANADA. THE ABOVE EXCLUSION MAY NOT APPLY TO YOU.

IN NO EVENT WILL BROTHER'S LICENSOR(S) BE LIABLE TO YOU FOR ANY CONSEQUENTIAL, INCIDENTAL OR INDIRECT DAMAGES (INCLUDING DAMAGES FOR LOSS OF BUSINESS PROFITS, BUSINESS INTERRUPTION, LOSS OF BUSINESS INFORMATION, AND THE LIKE) ARISING OUT OF THE USE OR INABILITY TO USE THE SOFTWARE EVEN IF BROTHER'S LICENSOR HAS BEEN ADVISED OF THE POSSIBILITY OF SUCH DAMAGES. BECAUSE SOME STATES IN THE USA AND SOME PROVINCES IN CANADA DO NOT ALLOW THE EXCLUSION OR LIMITATION OF LIABILITY FOR CONSEQUENTIAL OR INCIDENTAL DAMAGES, THE ABOVE LIMITATIONS MAY NOT APPLY TO YOU. IN ANY EVENT BROTHER'S LICENSOR'S LIABILITY TO YOU FOR ACTUAL DAMAGES FROM ANY CAUSE WHATSOEVER, AND REGARDLESS OF THE FORM OF THE ACTION (WHETHER IN CONTRACT, TORT (INCLUDING NEGLIGENCE), PRODUCT LIABILITY OR OTHERWISE), WILL BE LIMITED TO $50.

Related Information

- Before You Use Your Brother Machine

Trademarks

Microsoft, Windows, Windows Server, Internet Explorer and OneNote are either registered trademarks or trademarks of Microsoft Corporation in the United States and/or other countries.

Apple, App Store, Mac, Safari, AirPrint, the AirPrint logo, iPad, iPhone, iPod touch and macOS are trademarks of Apple Inc., registered in the United States and other countries.

PostScript and PostScript 3 are either registered trademarks or trademarks of Adobe Systems Incorporated in the United States and/or other countries.

Wi-Fi, Wi-Fi Alliance and Wi-Fi Direct are registered trademarks of Wi-Fi Alliance®.

WPA, WPA2, Wi-Fi CERTIFIED, Wi-Fi Protected Setup and Wi-Fi Protected Setup logo are trademarks of Wi-Fi Alliance®.

Android, Gmail, Google Cloud Print, Google Drive, Google Chrome, Chrome OS and Google Play are trademarks of Google LLC. Use of these trademarks is subject to Google Permissions.

Mopria® and the Mopria® Logo are registered trademarks and service marks of Mopria Alliance, Inc. in the United States and other countries. Unauthorized use is strictly prohibited.

Mozilla and Firefox are registered trademarks of the Mozilla Foundation.

Intel is a trademark of Intel Corporation in the U.S. and/or other countries.

Evernote is a trademark of Evernote Corporation and used under a license.

The Bluetooth® word mark is a registered trademark owned by the Bluetooth SIG, Inc. and any use of such marks by Brother Industries, Ltd. is under license.

Each company whose software title is mentioned in this manual has a Software License Agreement specific to its proprietary programs.
Any trade names and product names of companies appearing on Brother products, related documents and any other materials are all trademarks or registered trademarks of those respective companies.

Related Information

- Before You Use Your Brother Machine

Important Note

- Do not use this product outside the country of purchase as it may violate the wireless telecommunication and power regulations of that country.
- Not all models are available in all countries.
- Windows 10 in this document represents Windows 10 Home, Windows 10 Pro, Windows 10 Education and Windows 10 Enterprise.
- Windows Server 2008 in this document represents Windows Server 2008 and Windows Server 2008 R2.
- In this User's Guide, the LCD messages of the HL-L3230CDW/HL-L3270CDW are used unless otherwise specified.
- In this User's Guide, the illustrations of the HL-L3230CDW are used unless otherwise specified.
- The screens in this User's Guide are for illustration purposes only and may differ from the actual screens.
- Unless otherwise specified, the screens in this manual are from Windows 7 and macOS v10.12.x. Screens on your computer may vary depending on your operating system.
- The contents of this guide and the specifications of this product are subject to change without notice.
- Not all features are available in countries subject to applicable export restrictions.

Related Information

- Before You Use Your Brother Machine

Introduction to Your Brother Machine

- Before Using Your Machine
- Front View and Back View
- Control Panel Overview
- Touchscreen LCD Overview
- How to Navigate the Touchscreen LCD
- Access Brother Utilities (Windows)

Before Using Your Machine

Before attempting any printing operation, confirm the following:

- Make sure you have installed the printer driver.
- For USB or network cable users: Make sure the interface cable is physically secure.

Firewall (Windows)

If your computer is protected by a firewall and you are unable to network print, you may need to configure the firewall settings. If you are using the Windows Firewall and you installed the drivers using the steps in the installer, the necessary firewall settings have been already set. If you are using any other personal firewall software, see the User's Guide for your software or contact the software manufacturer.

Related Information

- Introduction to Your Brother Machine

Front View and Back View

>> HL-L3210CW/HL-L3230CDN/HL-L3230CDW
>> HL-L3270CDW

HL-L3210CW/HL-L3230CDN/HL-L3230CDW

Front View

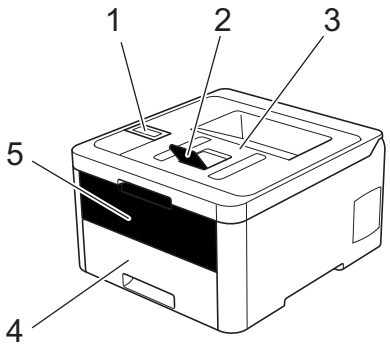

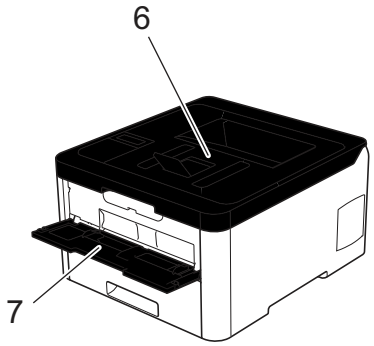

Back View

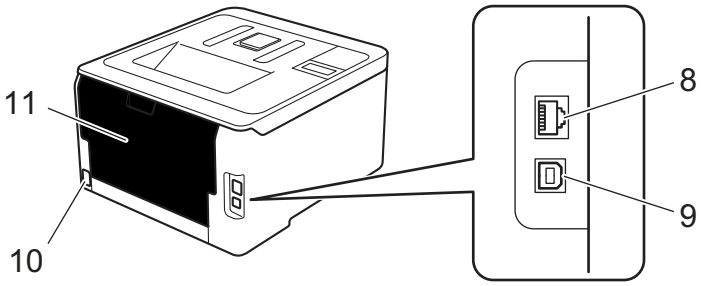

1. Control panel with a Liquid Crystal Display (LCD)
2. Face-down output tray support flap (support flap)
3. Face-down output tray
4. Paper tray
5. Manual feed slot cover
6. Top cover
7. Manual feed slot
8. (For wired network models)
   10BASE-T / 100BASE-TX port
9. USB port
10. AC power connector / cord
11. Back cover (Face-up output tray)

The machine is equipped with a non-detachable AC power cord depending on the model.

HL-L3270CDW

Front View

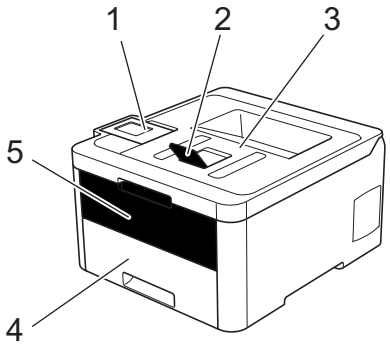

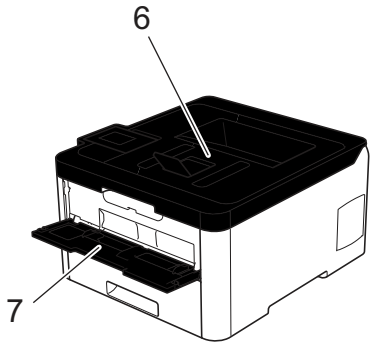

Back View

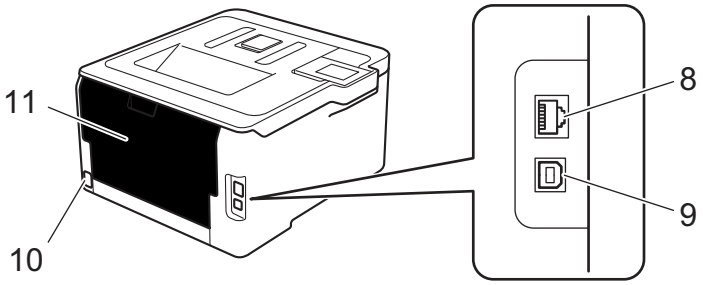

1. Touch panel with a tiltable touchscreen LCD
2. Face-down output tray support flap (support flap)
3. Face-down output tray
4. Paper tray
5. Manual feed slot cover
6. Top cover
7. Manual feed slot
8. 10BASE-T / 100BASE-TX port
9. USB port
10. AC power connector / cord
11. Back cover (Face-up output tray)

Related Information

- Introduction to Your Brother Machine

Control Panel Overview

The control panel may vary depending on your model.

>> HL-L3210CW/HL-L3230CDN/HL-L3230CDW
>> HL-L3270CDW

HL-L3210CW/HL-L3230CDN/HL-L3230CDW

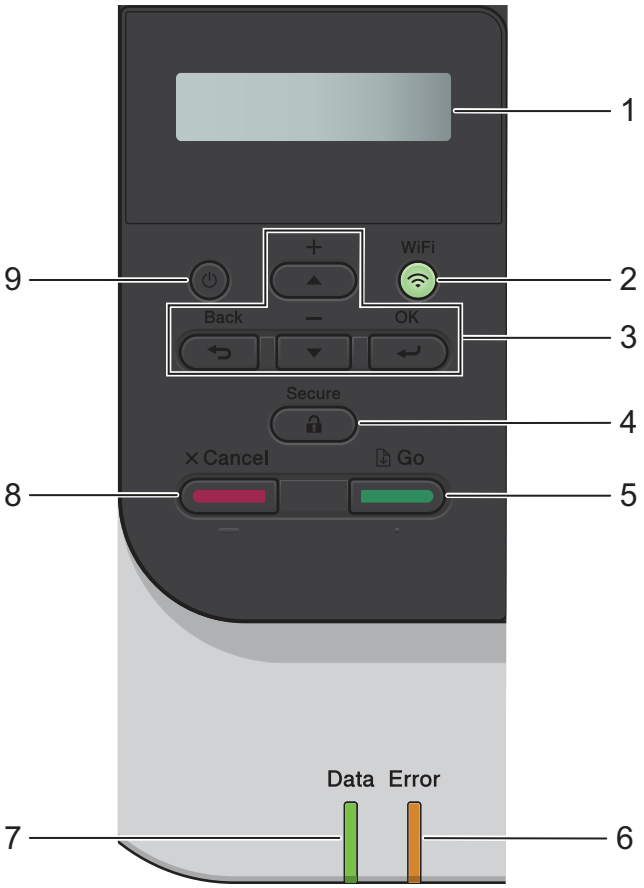

1. **Liquid Crystal Display (LCD)**

   Displays messages to help you set up and use the machine.

   - Wireless Network Models

     A four-level indicator shows the wireless signal strength if you are using a wireless connection.

2. **WiFi or Network Buttons**

   - Wired Network Models:

     Network

     Press the **Network** button to set up wired network settings.

   - Wireless Network Models:

     WiFi

     Launch the wireless installer on your computer and press the **WiFi** button. Follow the on-screen instructions to set up a wireless connection between your machine and your network.

     When the **WiFi** light is on, your Brother machine is connected to a wireless access point. When the **WiFi** light blinks, the wireless connection is down, or your machine is in the process of connecting to a wireless access point.

3. **Menu Buttons**

   OK

   Press to select the displayed option. After you change a setting, the machine returns to the previous menu level.

   Back

   - Press to go back one level in the menu.
   - Press to select the previous digit when entering letters or numbers.

   ▲ or ▼ (+ or -)

   - Press to scroll through menus and options.
   - Press to enter or change a letter or number. Hold down ▲ or ▼ to scroll faster. When you see the letter or number you want, press **OK**.

4. **Secure**

   Press to print jobs saved in the memory when you enter your four-digit password.

5. **Go**

   - Press to clear certain error messages. To clear all other errors, follow the LCD instructions.
   - Press to print any data remaining in the machine's memory.
   - Press to select the displayed option. After you change a setting, the machine returns to Ready Mode.

6. **Error LED**

   The **Error** LED blinks when the LCD displays an error or an important status message.

7. **Data LED**

   The **Data** LED blinks depending on the machine’s status.

   When the **Data** LED is on, data is in the machine’s memory. When the **Data** LED blinks, the machine is receiving or processing data.

8. **Cancel**

   - Press to cancel the current setting.
   - Press to cancel a programmed print job and clear it from the machine’s memory. To cancel multiple print jobs, hold down **Cancel** until the LCD displays `[Cancel All Jobs]`.

9. **Power On/Off**

   - Turn on the machine by pressing .
   - Turn off the machine by pressing and holding down .

HL-L3270CDW

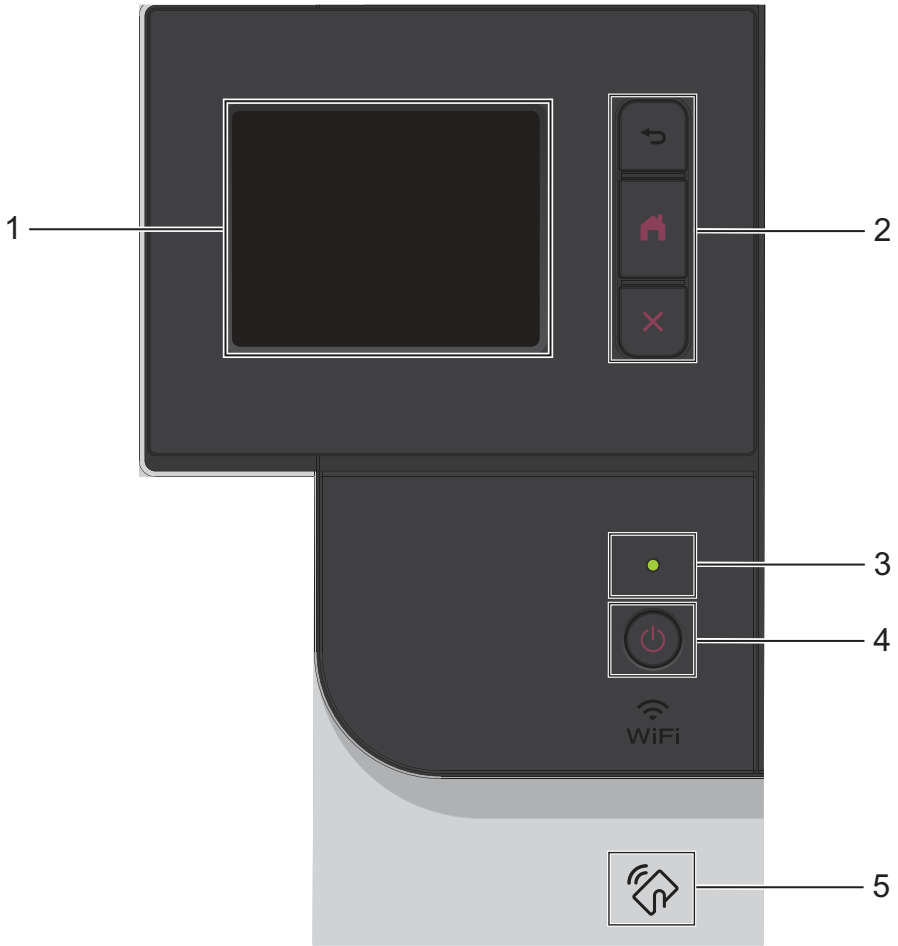

1. **Touchscreen Liquid Crystal Display (LCD)**

   Access menus and options by pressing them on the touchscreen.

2. **Menu buttons**

   (Back)

   Press to go back to the previous menu.

   (Home)

   Press to return to the Home screen.

   (Cancel)

   Press to cancel an operation. Press to cancel a programmed print job and clear it from the machine's memory.

3. **LED Power Indicator**

   The LED lights up depending on the machine's power status.

4. **Power On/Off**

   - Turn on the machine by pressing .
   - Turn off the machine by pressing and holding down .

5. **Near Field Communication (NFC)**

   If your Android™ device supports the NFC feature, you can print from your mobile device by touching it to the NFC symbol on the control panel.

Related Information

- Introduction to Your Brother Machine

Touchscreen LCD Overview

Related Models: HL-L3270CDW

From the Home screen, you can access the WiFi setup, Toner level, Settings, and Functions screens.

The Home screen displays the machine's status when the machine is idle. When displayed, this screen indicates that your machine is ready for the next command.

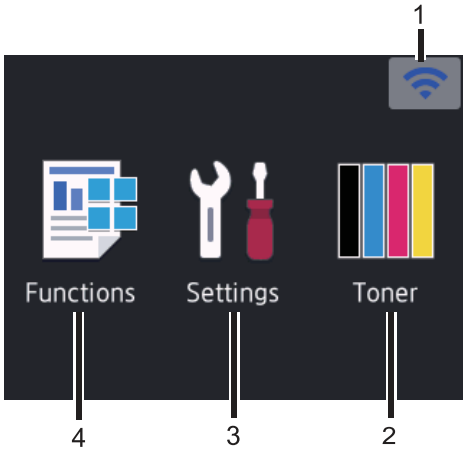

1. (**Wireless Status**)

   If you are using a wireless connection, a four-level indicator in the Home screen displays the current wireless signal strength.

   - If you see WiFi at the top on the screen, press to select a wireless connection method, or edit an existing wireless connection.

2. **[Toner]**

   Displays the remaining toner life. Press to access the `[Toner]` menu.

3. **[Settings]**

   Press to access the `[Settings]` menu.

   Use the Settings menu to access all of your Brother machine's settings.

   If Setting Lock has been turned on, a lock icon appears on the LCD. You must unlock the machine to change any settings.

4. **[Functions]**

   Press to access the Functions screen.

   - **[Secure Print]**

     Press to access the Secure Print option.

   - **[Web]**

     Press to connect the Brother machine to an Internet service.

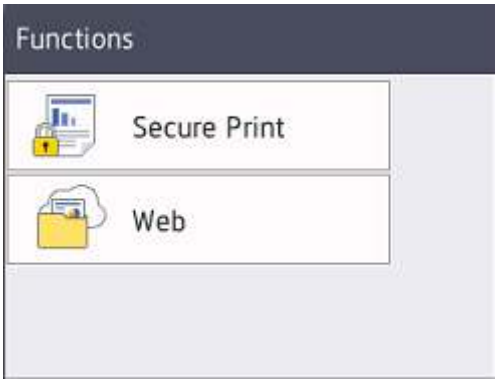

Warning icon

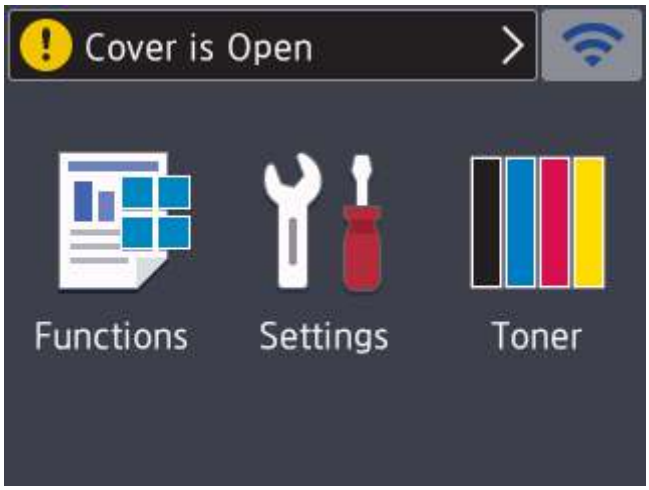

The warning icon appears when there is an error or maintenance message; press to view it, and then press to return to Ready Mode.

NOTE

This product adopts the font of ARPHIC TECHNOLOGY CO.,LTD.

Related Information

- Introduction to Your Brother Machine

How to Navigate the Touchscreen LCD

Related Models: HL-L3270CDW

Press your finger on the LCD to operate it. To display and access all the options, press ▲ or ▼ on the LCD to scroll through them.

The following steps explain how to navigate through changing the machine's setting. In this example, the LCD Backlight setting is changed from [Light] to [Med]:

IMPORTANT

DO NOT press the LCD with a sharp object such as a pen or stylus. It may damage the machine.

NOTE

DO NOT touch the LCD immediately after plugging in the power cord or turning on the machine. Doing this may cause an error.

1. Press [Settings] > [All Settings].
2. Press ▲ or ▼ to display the [General Setup] option, and then press [General Setup].

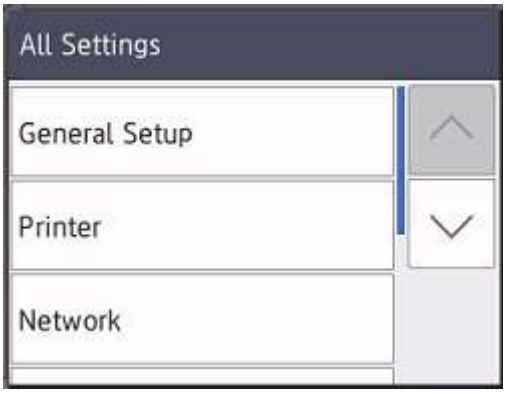

3. Press ▲ or ▼ to display the [LCD Settings] option, and then press [LCD Settings].

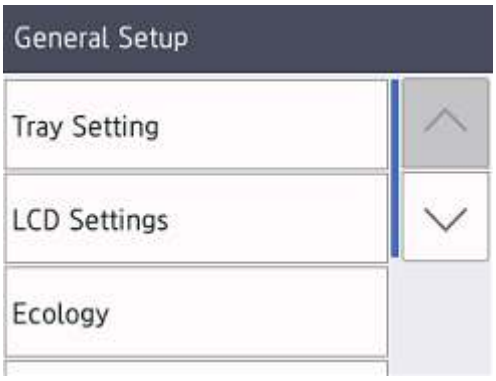

4. Press [Backlight].

5. Press [Med].

6. Press .

Related Information

- Introduction to Your Brother Machine

Access Brother Utilities (Windows)

Brother Utilities is an application launcher that offers convenient access to all Brother applications installed on your computer.

1. Do one of the following:
   - (Windows 7, Windows Server 2008 and Windows Server 2008 R2)

     Click **(Start)** > **All Programs** > **Brother** > **Brother Utilities**.
   - (Windows 8 and Windows Server 2012)

     Tap or click (**Brother Utilities**) either on the **Start** screen or the desktop.
   - (Windows 8.1 and Windows Server 2012 R2)

     Move your mouse to the lower left corner of the **Start** screen and click (if you are using a touch-based device, swipe up from the bottom of the **Start** screen to bring up the **Apps** screen).

     When the **Apps** screen appears, tap or click (**Brother Utilities**).
   - (Windows 10 and Windows Server 2016)

     Click > **Brother** > **Brother Utilities**.
2. Select your machine (where XXXX is the name of your model).

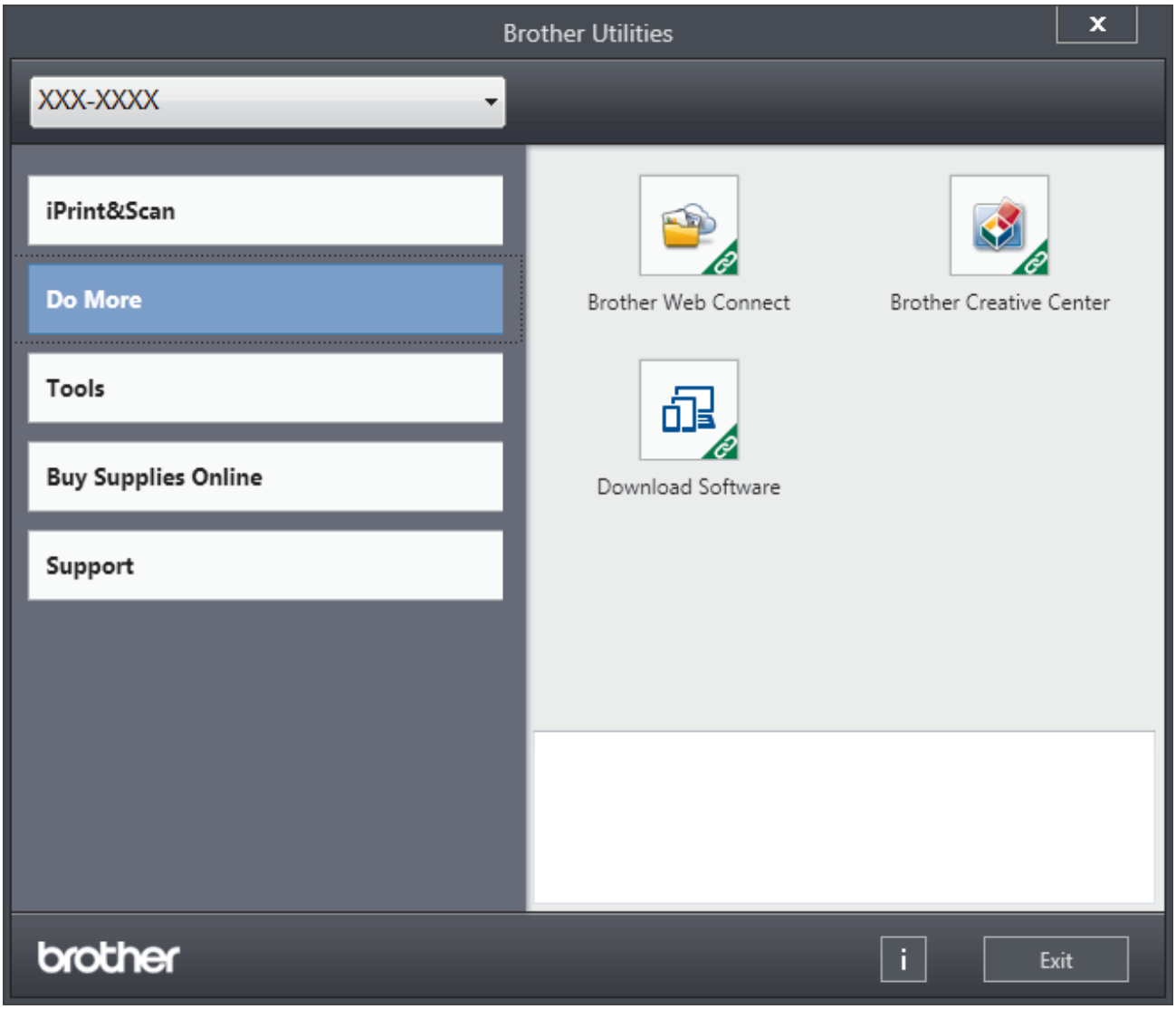

3. Choose the operation you want to use.

Related Information

- Introduction to Your Brother Machine
  - Uninstall the Brother Software and Drivers (Windows)

Uninstall the Brother Software and Drivers (Windows)

1. Do one of the following:
   - (Windows 7, Windows Server 2008 and Windows Server 2008 R2)

     Click **(Start)** > **All Programs** > **Brother** > **Brother Utilities**.
   - (Windows 8 and Windows Server 2012)

     Tap or click (**Brother Utilities**) either on the **Start** screen or the desktop.
   - (Windows 8.1 and Windows Server 2012 R2)

     Move your mouse to the lower left corner of the **Start** screen and click (if you are using a touch-based device, swipe up from the bottom of the **Start** screen to bring up the **Apps** screen).

     When the **Apps** screen appears, tap or click (**Brother Utilities**).
   - (Windows 10 and Windows Server 2016)

     Click > **Brother** > **Brother Utilities**.
2. Click the drop-down list, and then select your model name (if not already selected). Click **Tools** in the left navigation bar, and then click **Uninstall**.

   Follow the instructions in the dialog box to uninstall the software and drivers.

Related Information

- Access Brother Utilities (Windows)

Paper Handling

- Load Paper
- Paper Settings
- Unprintable Area
- Recommended Print Media
- Using Special Paper

Load Paper

- Load and Print Using the Paper Tray
- Load and Print Paper in the Manual Feed Slot

Load and Print Using the Paper Tray

- Load Paper in the Paper Tray
- Printing Problems
- Error and Maintenance Messages

Load Paper in the Paper Tray

- If the Check Size setting is set to On and you pull the paper tray out of the machine, a message appears on the LCD asking if you want to change the paper size and paper type. Change the paper size and paper type settings if needed, following the LCD instructions.
- When you load a different size and type of paper in the tray, you must also change the Paper Size and Paper Type settings in the machine, or on your computer.

1. Pull the paper tray completely out of the machine.

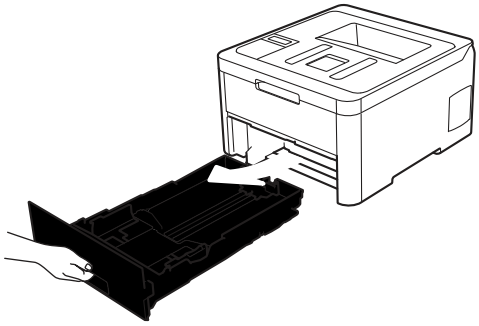

2. Press and slide the paper guides to fit the paper.

   Press the green release levers to slide the paper guides.

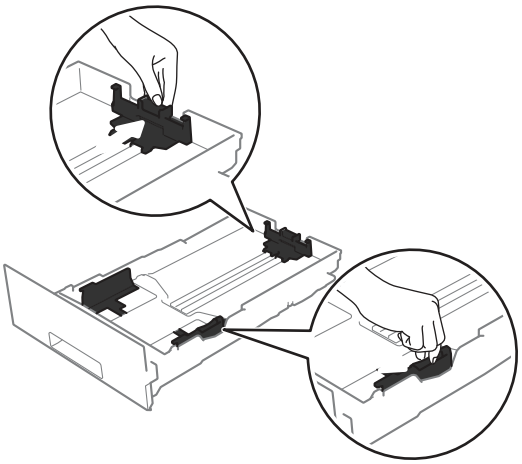

3. Fan the stack of paper well.
4. Load paper in the paper tray with the printing surface *face down*.

When you use preprinted paper, load the paper in the correct orientation. See *Related Information*: *Change Machine Settings to Print on Preprinted Paper in the Paper Tray.*

5. Make sure the paper is below the maximum paper mark (▼▼▼).
   Overfilling the paper tray will cause paper jams.

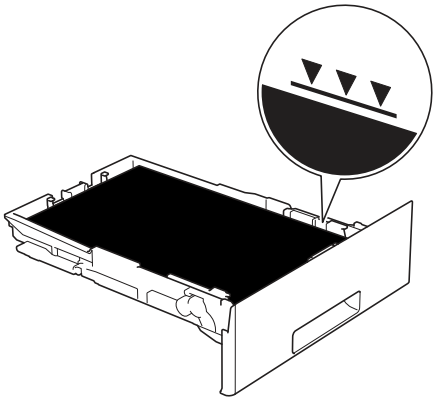

6. Slowly push the paper tray completely into the machine.
7. Lift the support flap to prevent paper from sliding off the output tray.

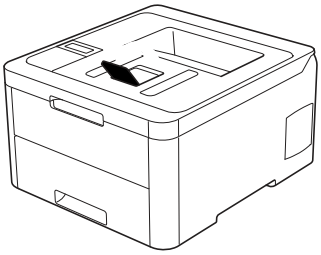

Related Information

- Load and Print Using the Paper Tray
  - Change Machine Settings to Print on Preprinted Paper in the Paper Tray

Change Machine Settings to Print on Preprinted Paper in the Paper Tray

Related Models: HL-L3230CDN/HL-L3230CDW/HL-L3270CDW

When you use preprinted paper for 2-sided printing, change the machine's settings.

DO NOT load different sizes and types of paper in the paper tray at the same time. Doing this may cause the paper to jam or misfeed.

Orientation

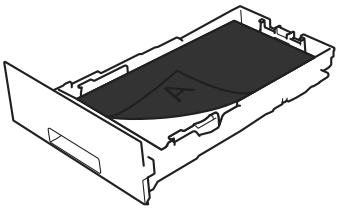	For 1-sided printing: • face down • top edge toward the front of the paper tray
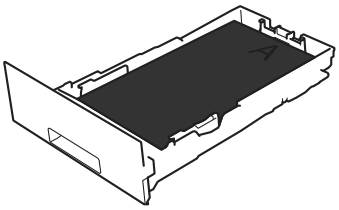	For automatic 2-sided printing (long edge binding): • face up • bottom edge toward the front of the paper tray

>> HL-L3230CDN/HL-L3230CDW
>> HL-L3270CDW

HL-L3230CDN/HL-L3230CDW

1. Press ▲ or ▼ to display the `[Printer]` option, and then press **OK**.
2. Press ▲ or ▼ to display the `[2-sided]` option, and then press **OK**.
3. Press ▲ or ▼ to display the `[Single Image]` option, and then press **OK**.
4. Press ▲ or ▼ to display the `[2-sided Feed]` option, and then press **Go**.

HL-L3270CDW

1. Press `[Settings]` > `[All Settings]` > `[Printer]` > `[2-sided]` > `[Single Image]` > `[2-sided Feed]`.
2. Press .

Related Information

- Load Paper in the Paper Tray

Load and Print Paper in the Manual Feed Slot

- Load and Print Paper in the Manual Feed Slot
- Load and Print on Labels in the Manual Feed Slot
- Load and Print on Envelopes in the Manual Feed Slot

Load and Print Paper in the Manual Feed Slot

When you load a different paper size in the tray, you must change the Paper Size setting in the machine or on your computer at the same time.

- Plain Paper
- Thin Paper
- Thick Paper
- Recycled Paper
- Bond Paper
- Glossy Paper

1. Lift the support flap to prevent paper from sliding off the face down output tray.

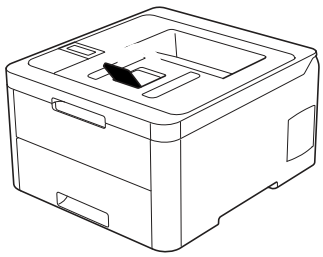

2. Open the manual feed slot cover.

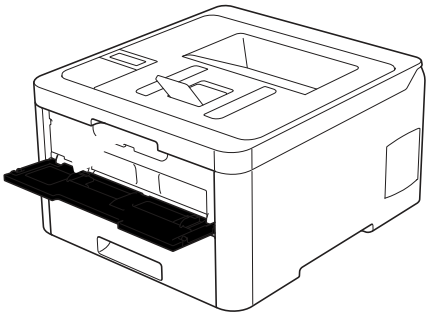

3. Use both hands to slide the manual feed slot paper guides to fit the width of the paper you are using.

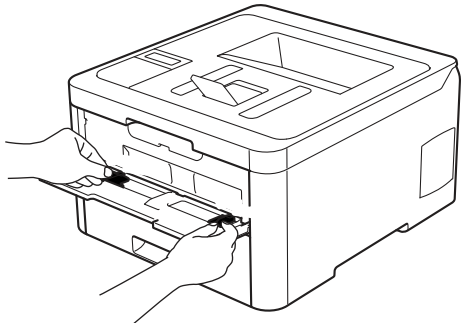

4. Using both hands, place one sheet of paper in the manual feed slot until the front edge touches the paper feed roller. When you feel the machine pull it in, let go.

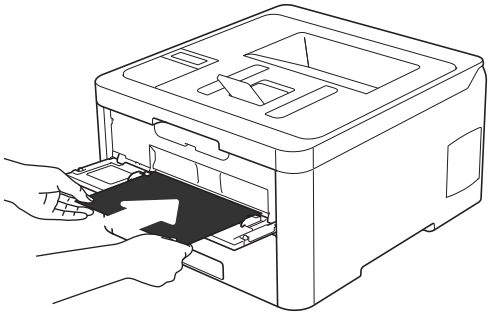

- Load paper into the manual feed slot with the printing surface facing up.
- Make sure the paper is straight and in the correct position in the manual feed slot. If it is not, the paper may not be fed correctly, resulting in a skewed printout or a paper jam.

5. Send your print job to the machine.

Change your print preferences in the Print screen before sending the print job from your computer.

6. After the printed page comes out from the machine, load the next sheet of paper in the manual feed slot. Repeat for each page that you want to print.

Related Information

- Load and Print Paper in the Manual Feed Slot

Load and Print on Labels in the Manual Feed Slot

When you load a different paper size in the tray, you must change the Paper Size setting in the machine or on your computer at the same time.

1. Open the machine's back cover (the face up output tray).

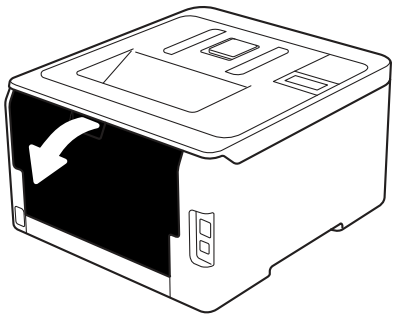

The machine automatically turns on Manual Feed mode when you load paper in the manual feed slot.

2. On the front of the machine, open the manual feed slot cover.

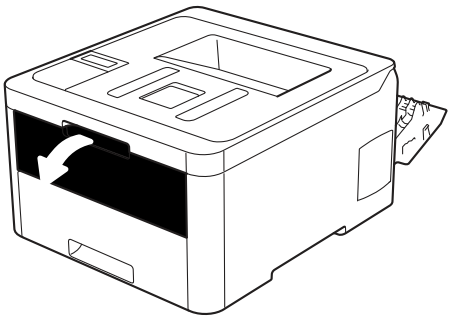

3. Use both hands to slide the manual feed slot paper guides to fit the width of the paper that you are using.

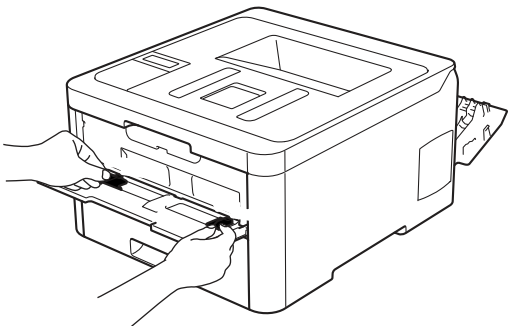

4. Using both hands, place one sheet of paper in the manual feed slot until the front edge touches the paper feed roller. When you feel the machine pull it in, let go.

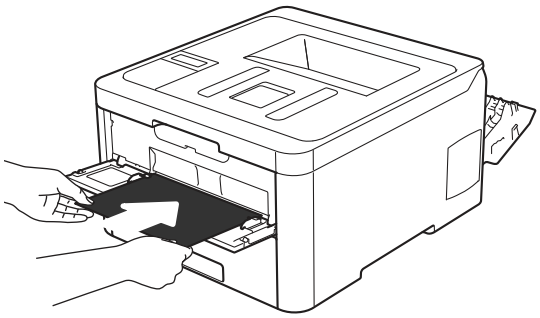

- Load paper into the manual feed slot with the printing surface facing up.
- Pull the paper out completely if you must reload the paper into the manual feed slot.
- Do not put more than one sheet of paper in the manual feed slot at one time, as it may cause a jam.
- Make sure the paper is straight and in the correct position in the manual feed slot. If it is not, the paper may not be fed correctly, resulting in a skewed printout or a paper jam.

5. Send your print job to the machine.

Change your print preferences in the Print screen before sending the print job from your computer.

6. After the printed page comes out from the back of the machine, load the next sheet of paper in the manual feed slot. Repeat for each page that you want to print.
7. Close the back cover (the face up output tray) until it locks in the closed position.

Related Information

- Load and Print Paper in the Manual Feed Slot

Load and Print on Envelopes in the Manual Feed Slot

When you load a different paper size in the tray, you must change the Paper Size setting in the machine or on your computer at the same time.

1. Open the machine's back cover (the face up output tray).

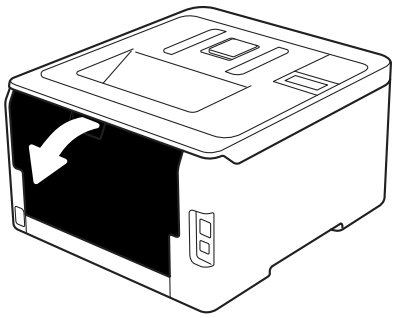

The machine automatically turns on Manual Feed mode when you load paper in the manual feed slot.

2. Pull down the two gray levers, one on the left side and one on the right side, as shown in the illustration.

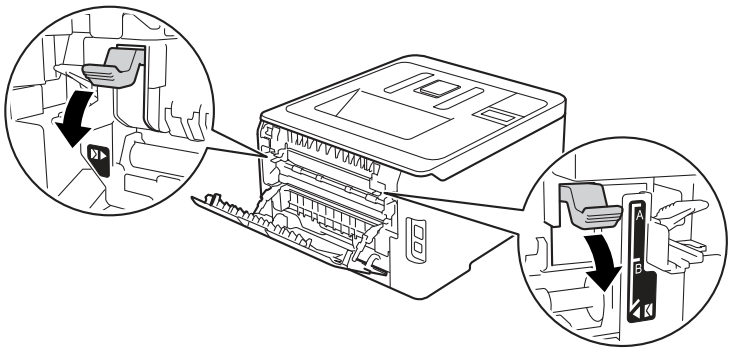

3. On the front of the machine, open the manual feed slot cover.

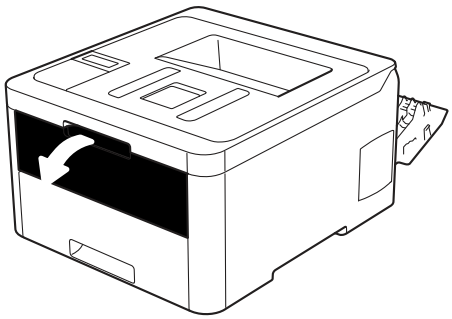

4. Use both hands to slide the manual feed slot paper guides to fit the width of the paper that you are using.

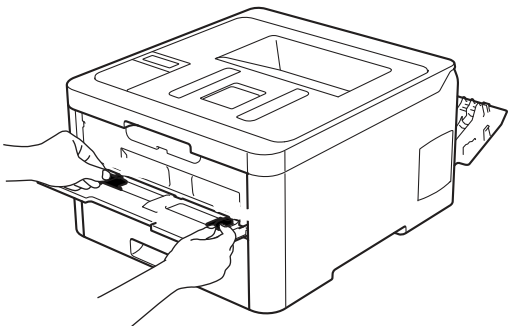

5. Using both hands, put one envelope in the manual feed slot until the front edge touches the paper feed roller. When you feel the machine pull it in, let go.

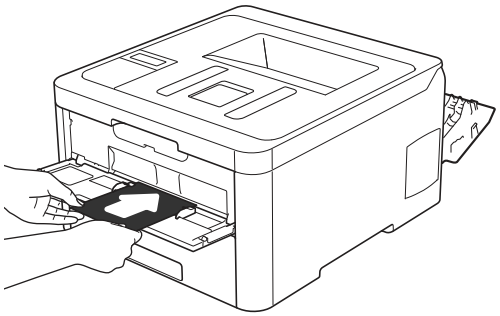

- Load the envelope into the manual feed slot with the printing surface facing up.
- Pull the envelope out completely when you reload the envelope into the manual feed slot.
- Do not put more than one envelope in the manual feed slot at one time, as it may cause a jam.
- Make sure the envelope is straight and in the correct position on the manual feed slot. If it is not, the envelope may not be fed correctly, resulting in a skewed printout or a paper jam.

6. Send your print job to the machine.

Change your print preferences in the Print dialog box before sending the print job from your computer.

Settings	Options for Envelopes
Paper Size	**Com-10** **DL** **C5** **Monarch**
Media Type	**Envelopes** **Env. Thick** **Env. Thin**

7. After the printed envelope comes out of the machine, put in the next envelope. Repeat for each envelope that you want to print.
8. When you have finished printing, return the two gray levers you adjusted in the earlier step back to their original positions.
9. Close the back cover (the face up output tray) until it locks in the closed position.

Related Information

- Load and Print Paper in the Manual Feed Slot

Paper Settings

- Change the Paper Size and Paper Type
- Change the Check Paper Size Setting

Change the Paper Size and Paper Type

When you change the size and type of the paper you load in the tray, you must change the Paper Size and Paper Type settings on the LCD at the same time.

>> HL-L3210CW/HL-L3230CDN/HL-L3230CDW
>> HL-L3270CDW

HL-L3210CW/HL-L3230CDN/HL-L3230CDW

1. Press ▲ or ▼ to display the [General Setup] option, and then press **OK**.
2. Press ▲ or ▼ to display the [Tray Setting] option, and then press **OK**.
3. Press ▲ or ▼ to display the [Paper Type] option, and then press **OK**.
4. Press ▲ or ▼ to display the paper type you want, and then press **OK**.
5. Press ▲ or ▼ to display the [Paper Size] option, and then press **OK**.
6. Press ▲ or ▼ to display the paper size you want, and then press **Go**.

HL-L3270CDW

1. Press [Settings] > [All Settings] > [General Setup] > [Tray Setting] > [Paper Type].
2. Press ▲ or ▼ to display the paper type options, and then press the option you want.
3. Press ▲ or ▼ to display the [Paper Size] option, and then press [Paper Size].
4. Press ▲ or ▼ to display the paper size options, and then press the option you want.
5. Press .

Related Information

- Paper Settings

Change the Check Paper Size Setting

When you turn on your machine's Check Size setting, the machine displays a message when you remove a paper tray, asking if you changed the paper size and paper type.

The default setting is On.

>> HL-L3210CW/HL-L3230CDN/HL-L3230CDW
>> HL-L3270CDW

HL-L3210CW/HL-L3230CDN/HL-L3230CDW

1. Press ▲ or ▼ to display the [General Setup] option, and then press **OK**.
2. Press ▲ or ▼ to select the [Tray Setting] option, and then press **OK**.
3. Press ▲ or ▼ to select the [Check Size] option, and then press **OK**.
4. Press ▲ or ▼ to select the [On] or [Off] option, and then press **Go**.

HL-L3270CDW

1. Press [Settings] > [All Settings] > [General Setup] > [Tray Setting] > [Check Size].
2. Press [On] or [Off].
3. Press .

Related Information

- Paper Settings

Unprintable Area

The measurements in the table below show maximum unprintable areas from the edges of the most commonly-used paper sizes. The measurements may vary depending on the paper size or settings in the application you are using.

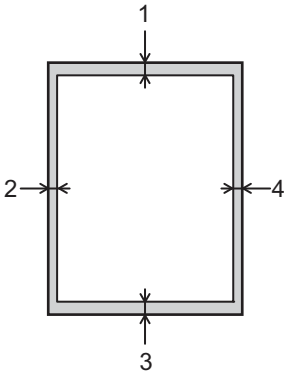

Do not attempt to print into these areas; your output will not reflect anything in these areas.

Usage	Document Size	Top (1) Bottom (3)	Left (2) Right (4)
Print	Letter	0.16 in. (4.23 mm)	0.16 in. (4.23 mm)
	A4	0.16 in. (4.23 mm)	0.16 in. (4.23 mm)
	Legal	0.16 in. (4.23 mm)	0.16 in. (4.23 mm)

Related Information

- Paper Handling

Recommended Print Media

To get the best print quality, we recommend using the paper listed in the table.

Paper Type	Item
Plain Paper	Xerox Vitality Multipurpose Printer Paper, 20 lb (20 lb = 75 g/m^2)
	Hammermill Laser Print (24 lb = 90 g/m^2)
Recycled Paper	No specific brand recommended
Labels	Avery laser labels white #5160
Envelopes	No specific brand recommended
Glossy Paper	NewPage Futura Laser Gloss 80 lb Text (80 lb =118 g/m^2)

Related Information

- Paper Handling

Related Topics:

- Improve the Print Quality

Using Special Paper

Always test paper samples before purchasing them to ensure desirable performance.

- DO NOT use inkjet paper; it may cause a paper jam or damage your machine.
- If you use bond paper, paper with a rough surface, or paper that is wrinkled or creased, the paper may exhibit degraded performance.

Store paper in its original packaging and keep it sealed. Keep the paper flat and away from moisture, direct sunlight and heat.

IMPORTANT

Some types of paper may not perform well or may cause damage to your machine.

DO NOT use paper:

- that is highly textured
- that is extremely smooth or shiny
- that is curled or warped
- that is coated or has a chemical finish
- that is damaged, creased or folded
- that exceeds the recommended weight specification in this guide
- with tabs and staples
- with letterheads using low temperature dyes or thermography
- that is multipart or carbonless
- that is designed for inkjet printing

If you use any of the types of paper listed above, they may damage your machine. This damage is not covered under any Brother warranty or service agreement.

Related Information

- Paper Handling

Print

- Print from Your Computer (Windows)
- Print from Your Computer (Mac)
- Cancel a Print Job
- Test Print

Print from Your Computer (Windows)

- Print a Document (Windows)
- Print Settings (Windows)
- Secure Print (Windows)
- Change the Default Print Settings (Windows)
- Print a Document Using the BR-Script3 Printer Driver (PostScript® 3™ Language Emulation) (Windows)
- Monitor the Status of the Machine from Your Computer (Windows)

Print a Document (Windows)

1. Select the print command in your application.
2. Select **Brother XXX-XXXX** (where XXXX is the name of your model), and then click the printing properties or preferences button.

   The printer driver window appears.

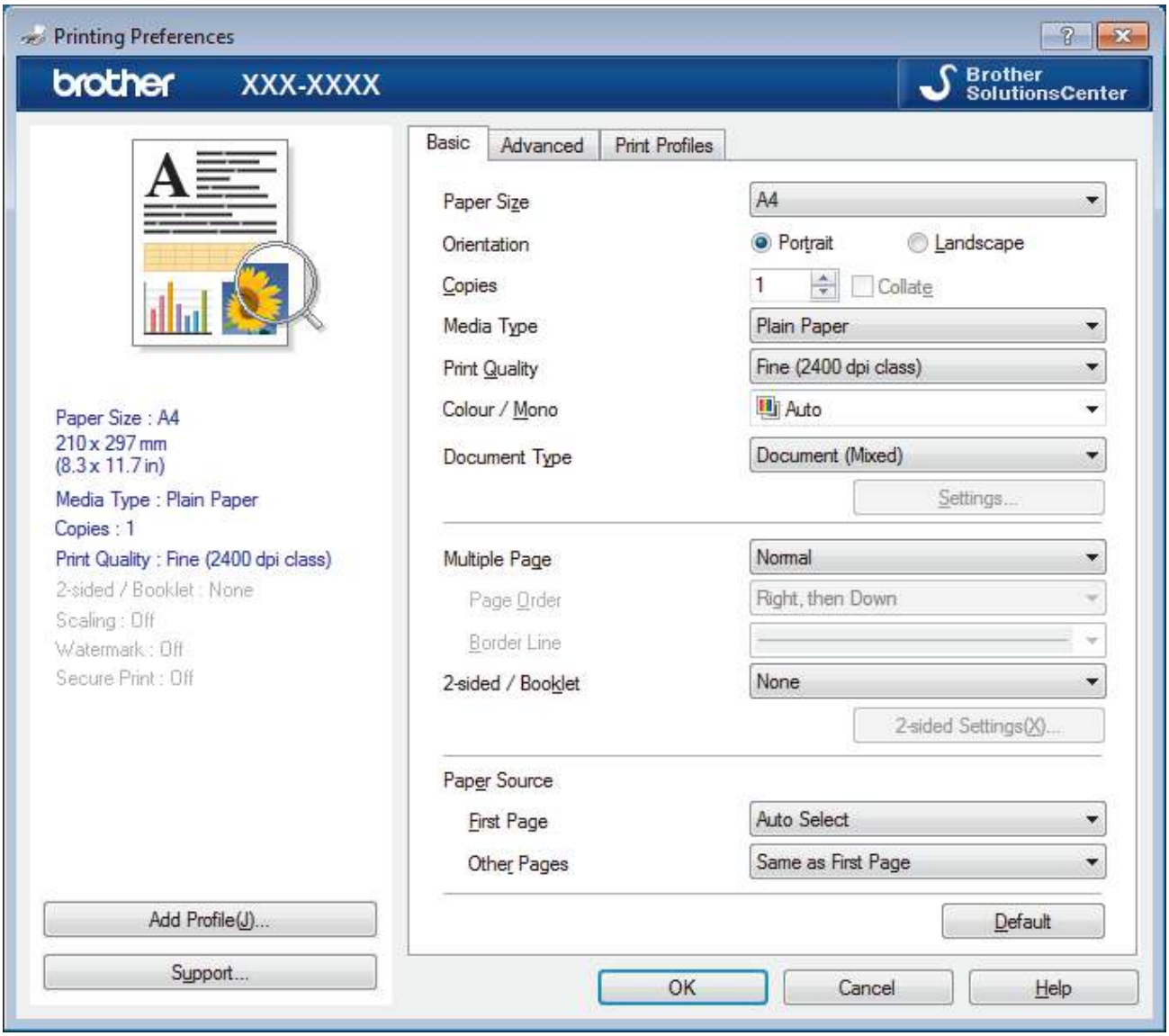

3. Make sure you have loaded the correct size paper in the paper tray.
4. Click the **Paper Size** drop-down list, and then select your paper size.
5. In the **Orientation** field, select the **Portrait** or **Landscape** option to set the orientation of your printout.

   If your application contains a similar setting, we recommend that you set the orientation using the application.

6. Type the number of copies (1-999) you want in the **Copies** field.
7. Click the **Media Type** drop-down list, and then select the type of paper you are using.
8. To print multiple pages on a single sheet of paper or print one page of your document on multiple sheets, click the **Multiple Page** drop-down list, and then select your options.
9. Change other printer settings, if needed.
10. Click **OK**.
11. Complete your print operation.

Related Information

- Print from Your Computer (Windows)

Related Topics:

- Print Settings (Windows)

Print Settings (Windows)

Basic Tab

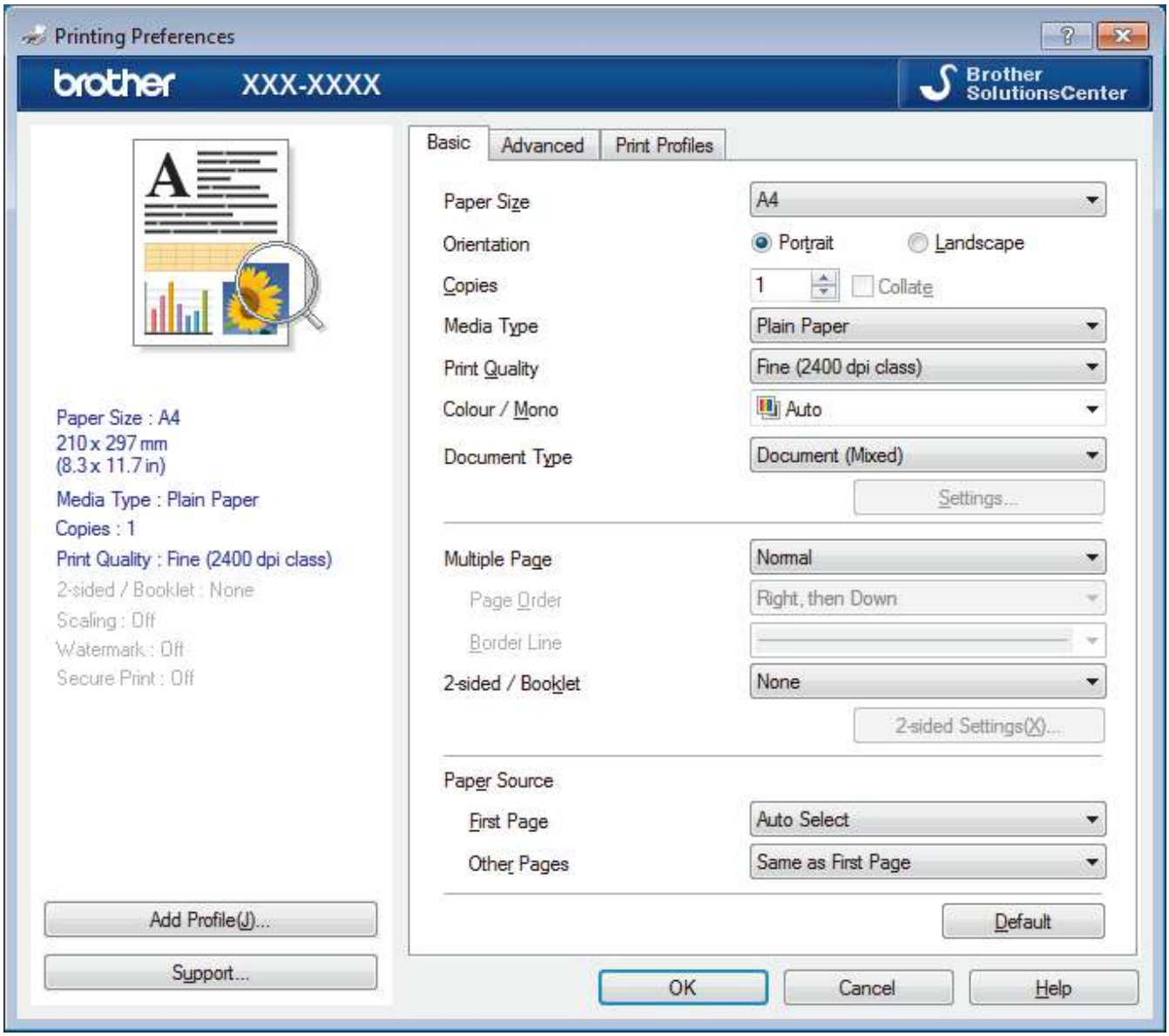

1. **Paper Size**

   Select the size of the paper you want to use. You can either choose from standard paper sizes or create a custom paper size.

2. **Orientation**

   Select the orientation (portrait or landscape) of your printout.

   If your application contains a similar setting, we recommend that you set the orientation using the application.

3. **Copies**

   Type the number of copies (1-999) that you want to print in this field.

   Collate

   Select this option to print sets of multi-page documents in the original page order. When this option is selected, one complete copy of your document will print, and then reprint according to the number of copies you choose. If this option is not selected, then each page will print according to the number of copies chosen before the next page of the document is printed.

4. **Media Type**

   Select the type of media you want to use. To achieve the best print results, the machine automatically adjusts its print settings according to the selected media type.

5. **Print Quality**

   Select the print resolution you want. Because print quality and speed are related, the higher the quality, the longer it will take to print the document.

6. **Color / Mono**

   Select the Color/Mono settings to use.

NOTE

- The machine's color sensor is very sensitive and may perceive faded black text or an off-white background as color. If you know that your document is black and white and you want to conserve color toner, select **Mono** mode.
- If either the Cyan, Magenta or Yellow toner reaches the end of its life while printing a color document, the print job cannot be completed. Cancel your print job and select to start the print job again in **Mono** mode, as long as Black toner is available.

7. **Document Type**

   Select the type of document you want to print.

   Settings button

   Specify advanced settings, such as color mode and other settings.

   Color Mode

   Select the color mode to suit your preference.

   Import

   To adjust the print configuration of a particular image, click **Settings**. When you have finished adjusting the image parameters, such as brightness and contrast, import those settings as a print configuration file. Use the **Export** option to create a print configuration file from the current settings.

   Export

   To adjust the print configuration of a particular image, click **Settings**. When you have finished adjusting the image parameters, such as brightness and contrast, export those settings as a print configuration file. Use the **Import** option to load a previously exported configuration file.

   Improve Gray Color

   Select this option to improve the image quality of shaded areas.

   Enhance Black Printing

   If a black graphic does not print correctly, select this setting.

   Improve Pattern Printing

   Select this option to improve the pattern printing if printed fills and patterns are different from the fills and patterns you see on your computer screen.

8. **Multiple Page**

   Select this option to print multiple pages on a single sheet of paper, or print one page of your document on multiple sheets.

   Page Order

   Select the page order when printing multiple pages on a single sheet of paper.

   Border Line

   Select the type of border to use when printing multiple pages on a single sheet of paper.

9. **2-sided / Booklet (Available only for certain models)**

   Select this option to print on both sides of the paper, or print a document in booklet format using 2-sided printing.

2-sided Settings button

Click this button to select the type of 2-sided binding. Four types of 2-sided bindings are available for each orientation.

10. Paper Source

Select the paper source setting according to your print conditions or purpose.

First Page

Select the paper source to use for printing the first page.

Other Pages

Select the paper source to use for printing the second and subsequent pages.

Advanced Tab

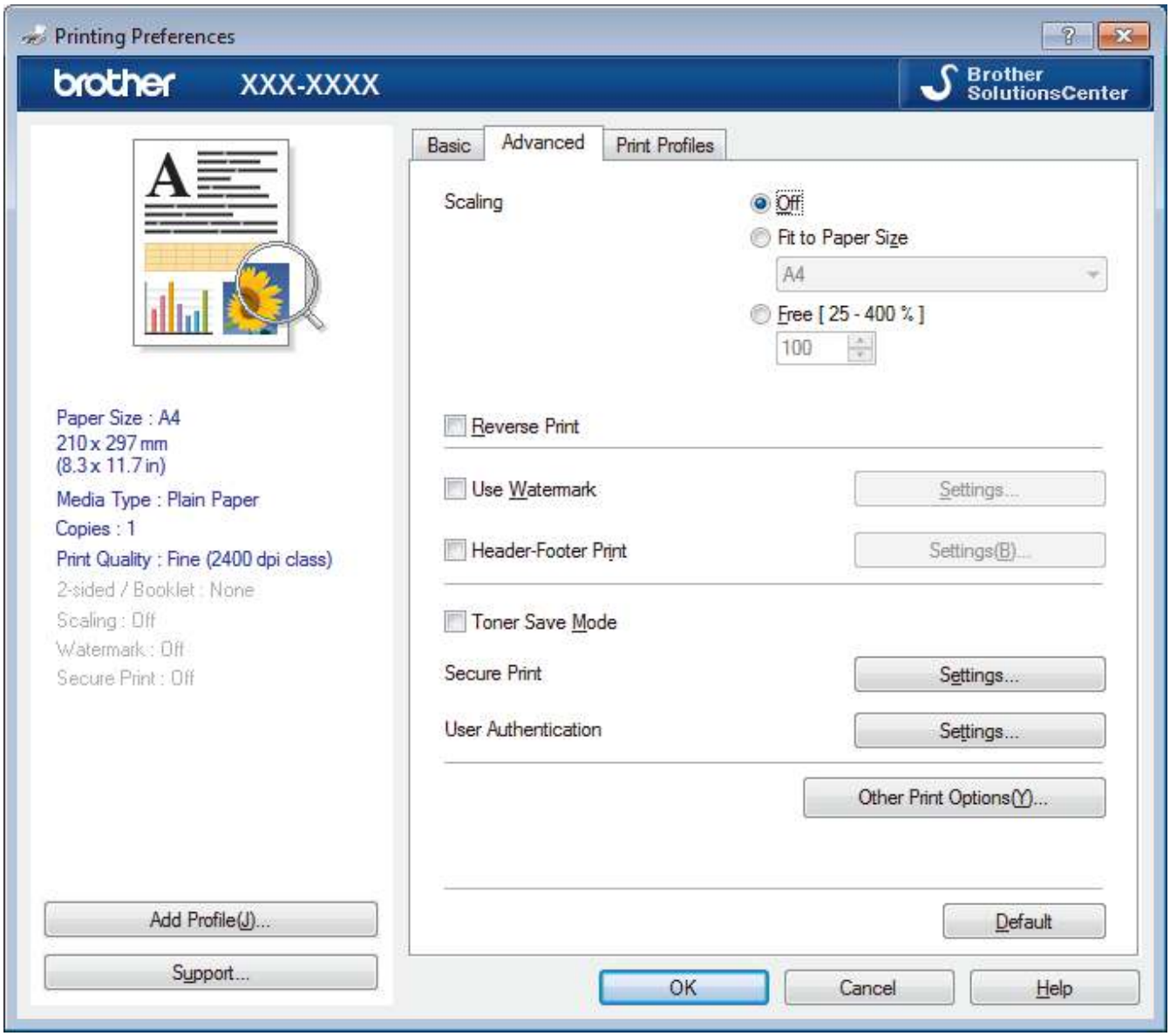

1. Scaling

Select these options to enlarge or reduce the size of the pages in your document.

Fit to Paper Size

Select this option to enlarge or reduce the document pages to fit a specified paper size. When you select this option, select the paper size you want from the drop-down list.

Free

Select this option to enlarge or reduce the document pages manually. When you select this option, type a value into the field.

2. **Reverse Print**

   Select this option to rotate the printed image 180 degrees.

3. **Use Watermark**

   Select this option to print a logo or text on your document as a watermark. Select one of the preset watermarks, add a new watermark, or use an image file you have created.

4. **Header-Footer Print**

   Select this option to print the date, time and PC login user name on the document.

5. **Toner Save Mode**

   Select this feature to conserve toner by using less toner to print documents; printouts appear lighter, but are still legible.

6. **Secure Print**

   This feature ensures that confidential or sensitive documents do not print until you enter a password on the machine's control panel.

7. **Administrator**

   This feature allows you to change the administrator password and restrict various printing functions.

8. **User Authentication**

   This feature allows you to confirm the restrictions for each user.

9. **Other Print Options button**

   Sleep Time

   Select this option to set the machine to enter sleep mode immediately after printing.

   Improve Print Output

   Select this option to reduce the amount of paper curling and improve the toner fixing.

   Skip Blank Page

   Select this option to allow the printer driver to automatically detect blank pages and exclude them from printing.

   TrueType Mode

   Mode

   Select how the fonts are processed for printing.

   Use Printer TrueType Fonts(Available only for certain models)

   Select whether to use built-in fonts for the font processing.

   Eco settings

   Select this option to reduce printing noise.

Related Information

- Print from Your Computer (Windows)

Related Topics:

- Print a Document (Windows)

Secure Print (Windows)

Use Secure Print to ensure that confidential or sensitive documents do not print until you enter a password on the machine's control panel.

- The secure data is deleted from the machine when you turn off the machine.

>> HL-L3210CW/HL-L3230CDN/HL-L3230CDW
>> HL-L3270CDW

HL-L3210CW/HL-L3230CDN/HL-L3230CDW

1. Select the print command in your application.
2. Select **Brother XXX-XXXX** (where XXXX is the name of your model), and then click the printing properties or preferences button.

   The printer driver window appears.
3. Click the **Advanced** tab.
4. Click the **Settings** button in the **Secure Print** field.
5. Select the **Secure Print** check box.
6. Type your four-digit password in the **Password** field.

   You must set a separate password for each document.
7. Type the **User Name** and **Job Name** in the text field, if needed.
8. Click **OK**, to close the **Secure Print Settings** window.
9. Click **OK**.
10. Complete your print operation.
11. On the machine's control panel, press **Secure**.
12. Press ▲ or ▼ to display your user name, and then press **OK**.

    The LCD displays the list of secured jobs for that name.
13. Press ▲ or ▼ to display the job, and then press **OK**.
14. Enter your four-digit password.

    To enter each digit, press ▲ or ▼ to select a number, and then press **OK**.
15. Press ▲ or ▼ to select the `[Print]` option, and then press **OK**.
16. Press ▲ or ▼ to enter the number of copies you want.
17. Press **OK**.

    The machine prints the data.

After you have printed the secured data, it will be cleared from the machine's memory.

HL-L3270CDW

1. Select the print command in your application.
2. Select **Brother XXX-XXXX** (where XXXX is the name of your model), and then click the printing properties or preferences button.

   The printer driver window appears.
3. Click the **Advanced** tab.
4. Click the **Settings** button in the **Secure Print** field.
5. Select the **Secure Print** check box.
6. Type your four-digit password in the **Password** field.

You must set a separate password for each document.

7. Type the **User Name** and **Job Name** in the text field, if needed.
8. Click **OK**, to close the **Secure Print Settings** window.
9. Click **OK**.
10. Complete your print operation.
11. On the machine's control panel, press `[Functions]`.
12. Press `[Secure Print]`.
13. Press ▲ or ▼ to display user names, and then press your user name.
    The LCD displays the list of secured jobs for your name.
14. Press ▲ or ▼ to display the print job, and then press it.
15. Enter your four-digit password, and then press `[OK]`.
16. Enter the number of copies you want.
17. Press `[Start]`.
    The machine prints the data.

After you have printed the secured data, it will be cleared from the machine's memory.

Related Information

- Print from Your Computer (Windows)

Change the Default Print Settings (Windows)

When you change an application's print settings, the changes only apply to documents printed with that application. To change print settings for all Windows applications, you must configure the printer driver properties.

1. Do one of the following:
   - For Windows Server 2008

     Click **(Start)** > **Control Panel** > **Hardware and Sound** > **Printers**.
   - For Windows 7 and Windows Server 2008 R2

     Click **(Start)** > **Devices and Printers**.
   - For Windows 8

     Move your mouse to the lower right corner of your desktop. When the menu bar appears, click **Settings**, and then click **Control Panel**. In the **Hardware and Sound** group, click **View devices and printers**.
   - For Windows 10 and Windows Server 2016

     Click > **Windows System** > **Control Panel**. In the **Hardware and Sound** group, click **View devices and printers**.
   - For Windows Server 2012

     Move your mouse to the lower right corner of your desktop. When the menu bar appears, click **Settings**, and then click **Control Panel**. In the **Hardware** group, click **View devices and printers**.
   - For Windows Server 2012 R2

     Click **Control Panel** on the **Start** screen. In the **Hardware** group, click **View devices and printers**.
2. Right-click the **Brother XXX-XXXX** icon (where XXXX is your model name), and then select **Printer properties**. If printer driver options appear, select your printer driver.
3. Click the **General** tab, and then click the **Printing Preferences...** or **Preferences...** button.

   The printer driver dialog box appears.

   - To configure the tray settings, click the **Device Settings** tab(Available only for certain models).
   - To change the printer port, click the **Ports** tab.
4. Select the print settings you want to use as defaults for all of your Windows programs.
5. Click **OK**.
6. Close the printer properties dialog box.

Related Information

- Print from Your Computer (Windows)

Print a Document Using the BR-Script3 Printer Driver (PostScript® 3™ Language Emulation) (Windows)

The BR-Script3 printer driver lets you print PostScript® data more clearly.

To install the PS driver (BR-Script3 printer driver), launch the Brother installation disc, select **Custom** in the Select Machine section, and then select the **PS Driver** check box.

1. Select the print command in your application.
2. Select **Brother XXX-XXXX BR-Script3** (where XXXX is the name of your model), and then click the printing properties or preferences button.

   The printer driver window appears.

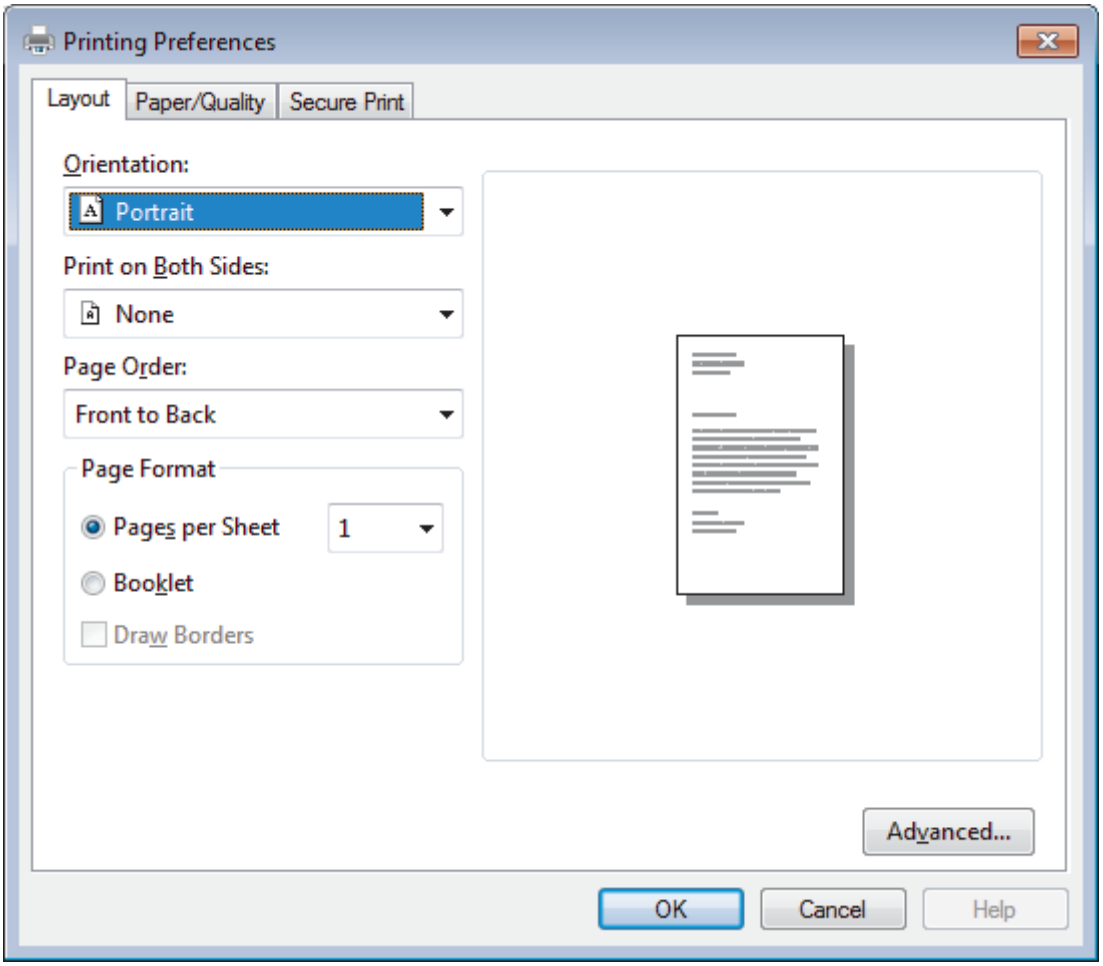

3. Click the **Layout**, **Paper/Quality**, or **Secure Print** tab to change basic print settings. (Available only for certain models)

   Click the **Layout** or **Paper/Quality** tab, and then click the **Advanced...** button to change advanced print settings.
4. Click **OK**.
5. Complete your print operation.

Related Information

- Print from Your Computer (Windows)

Monitor the Status of the Machine from Your Computer (Windows)

The Status Monitor utility is a configurable software tool for monitoring the status of one or more devices, allowing you to get immediate notification of errors.

- Do one of the following:
  - Double-click the icon in the task tray.
  - (Windows 7, Windows Server 2008 and Windows Server 2008 R2)

    Click **(Start)** > **All Programs** > **Brother** > **Brother Utilities**.

    Click the drop-down list and select your model name (if not already selected). Click **Tools** in the left navigation bar, and then click **Status Monitor**.
  - (Windows 8 and Windows Server 2012)

    Click (**Brother Utilities**), and then click the drop-down list and select your model name (if not already selected). Click **Tools** in the left navigation bar, and then click **Status Monitor**.
  - (Windows 8.1 and Windows Server 2012 R2)

    Move your mouse to the lower left corner of the **Start** screen and click (if you are using a touch-based device, swipe up from bottom of the **Start** screen to bring up the **Apps** screen). When the **Apps** screen appears, tap or click (**Brother Utilities**), and then click the drop-down list and select your model name (if not already selected). Click **Tools** in the left navigation bar, and then click **Status Monitor**.
  - (Windows 10 and Windows Server 2016)

    Click > **Brother** > **Brother Utilities**.

    Click the drop-down list and select your model name (if not already selected). Click **Tools** in the left navigation bar, and then click **Status Monitor**.

Troubleshooting

Click the **Troubleshooting** button to access the troubleshooting website.

Visit the Genuine Supplies website

Click the **Visit the Genuine Supplies website** button for more information on Brother genuine supplies.

Related Information

- Print from Your Computer (Windows)

Related Topics:

- Printing Problems
- Calibrate Color Output

Print from Your Computer (Mac)

- Print a Document (Mac)
- Print Options (Mac)
- Secure Print (Mac)
- Print a Document Using the BR-Script3 Printer Driver (PostScript® 3™ language emulation) (Mac)
- Monitor the Status of the Machine from Your Computer (Mac)

Print a Document (Mac)

1. Make sure you have loaded the correct size paper in the paper tray.
2. From an application, such as Apple TextEdit, click the **File** menu, and then select **Print**.
3. Select **Brother XXX-XXXX** (where XXXX is your model name).
4. Type the number of copies you want in the **Copies** field.
5. Click the **Paper Size** pop-up menu, and then select your paper size.
6. Select the **Orientation** option that matches the way you want the document to print.
7. Click the application pop-up menu, and then select **Print Settings**.
   The **Print Settings** options appear.
8. Click the **Media Type** pop-up menu, and then select the type of paper you are using.
9. Change other printer settings, if needed.
10. Click **Print**.

Related Information

- Print from Your Computer (Mac)

Related Topics:

- Print Options (Mac)

Print Options (Mac)

Page Setup

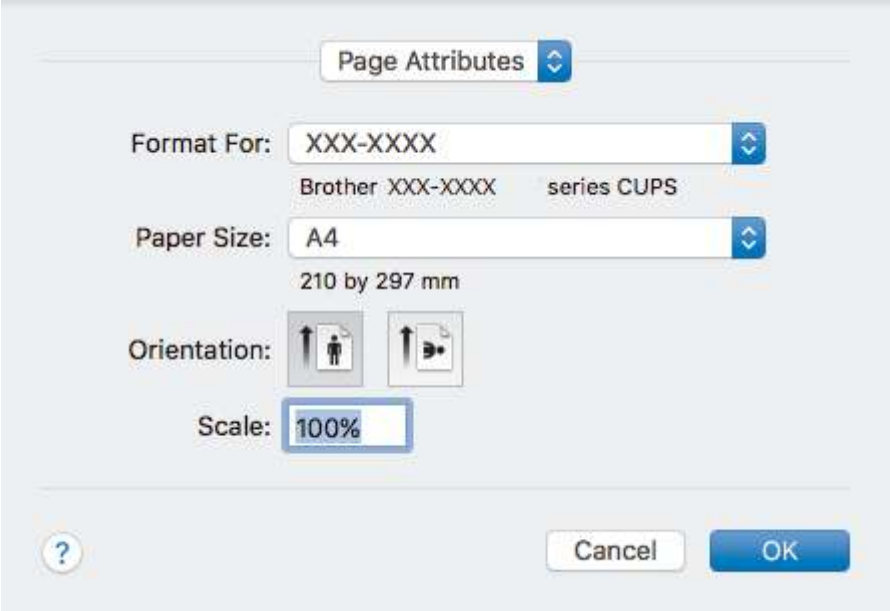

1. **Paper Size**

   Select the size of the paper you want to use. You can either choose from standard paper sizes or create a custom paper size.

2. **Orientation**

   Select the orientation (portrait or landscape) of your printout.

   If your application contains a similar setting, we recommend that you set the orientation using the application.

3. **Scale**

   Type a value into the field to enlarge or reduce the pages in your document to fit the selected paper size.

Layout

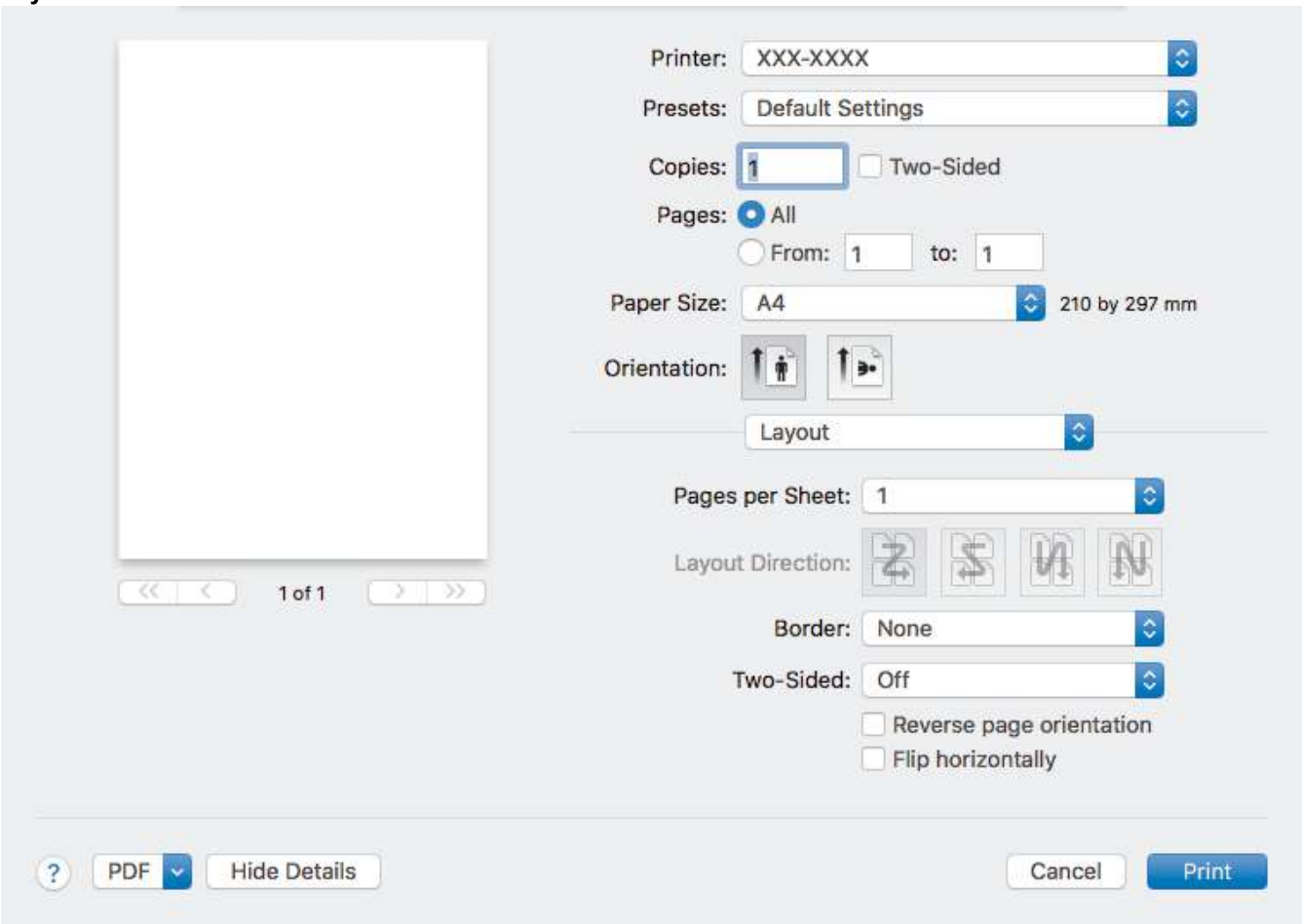

1. **Pages per Sheet**

   Select the number of pages to print on a single sheet of paper.
2. **Layout Direction**

   Select the page order when printing multiple pages on a single sheet of paper.
3. **Border**

   Select the type of border to use when printing multiple pages on a single sheet of paper.
4. **Two-Sided (Available only for certain models)**

   Select whether to print on both sides of the paper.
5. **Reverse page orientation**

   Select this option to rotate the printed image 180 degrees.
6. **Flip horizontally**

   Select this option to reverse the printed image on the page horizontally from left to right.

Paper Handling

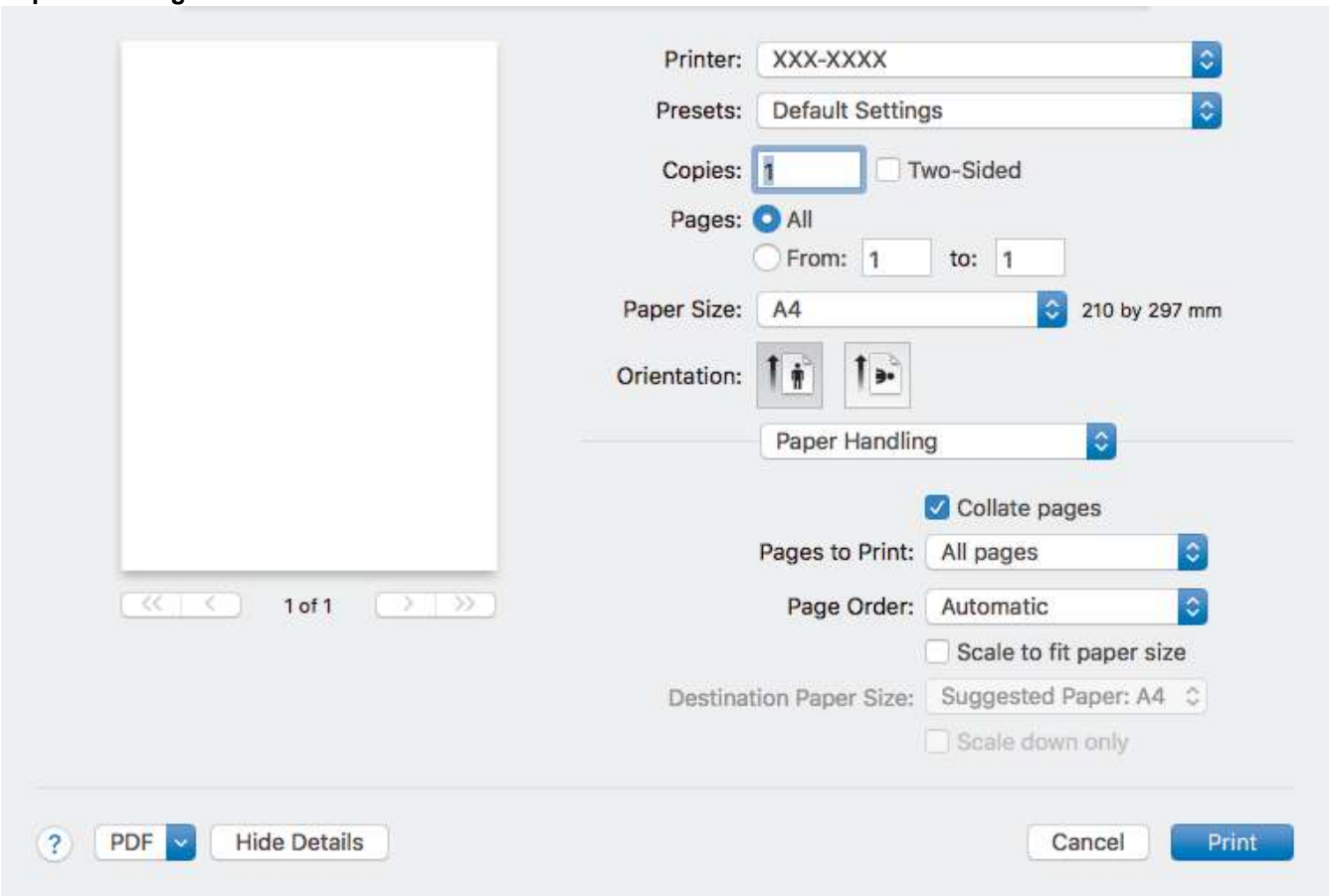

1. **Collate pages**

   Select this option to print sets of multi-page documents in the original page order. When this option is selected, one complete copy of your document will print, and then reprint according to the number of copies you choose. If this option is not selected, then each page will print according to the number of copies chosen before the next page of the document is printed.

2. **Pages to Print**

   Select which pages you want to print (even pages or odd pages).

3. **Page Order**

   Select the page order.

4. **Scale to fit paper size**

   Select this option to enlarge or reduce the pages in your document to fit the selected paper size.

5. **Destination Paper Size**

   Select the paper size to print on.

6. **Scale down only**

   Select this option if you want to reduce the pages in your document when they are too large for the selected paper size. If this option is selected and the document is formatted for a paper size that is smaller than the paper size you are using, the document will be printed at its original size.

Print Settings

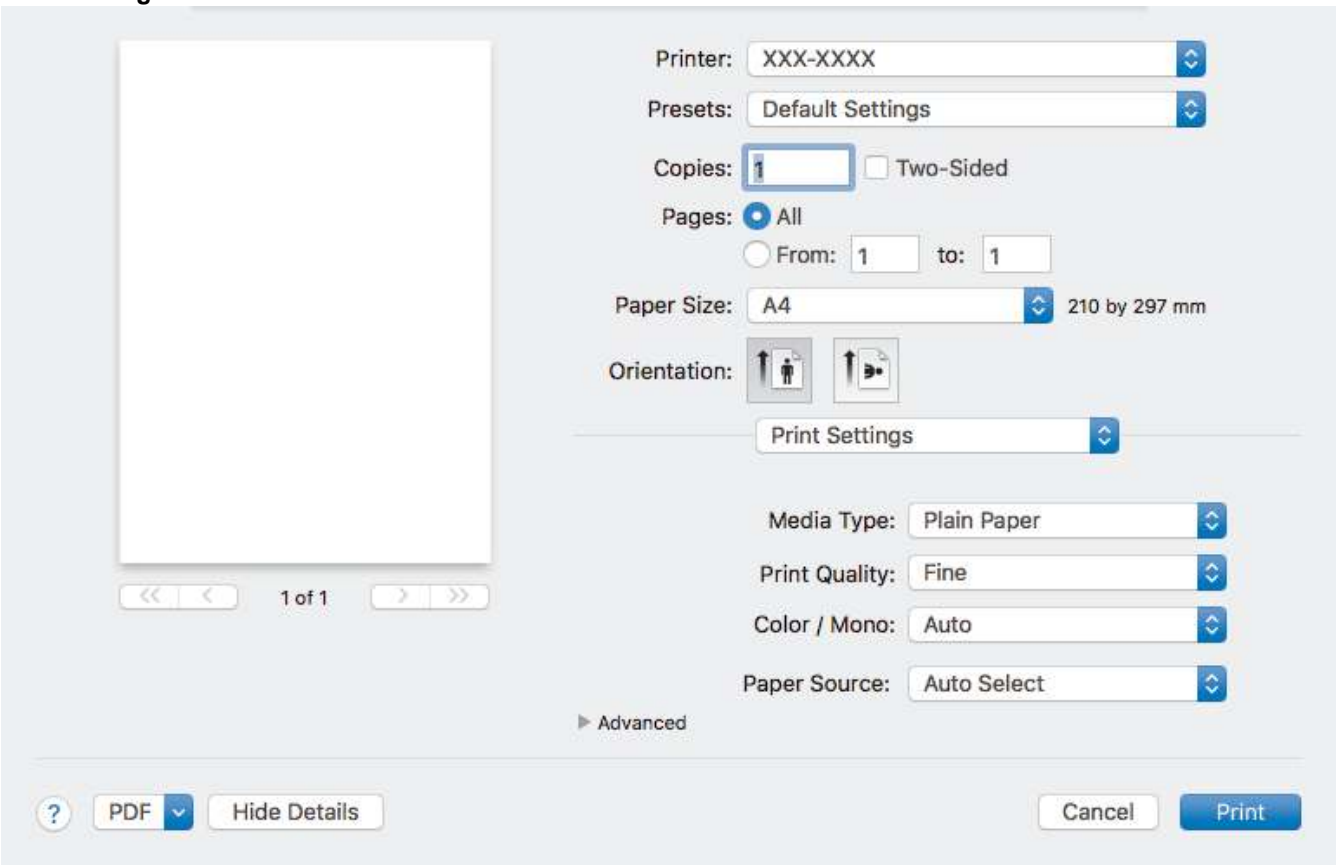

1. **Media Type**

   Select the type of media you want to use. To achieve the best print results, the machine automatically adjusts its print settings according to the selected media type.

2. **Print Quality**

   Select the print resolution you want. Because print quality and speed are related, the higher the quality, the longer it will take to print the document.

3. **Color / Mono**

   Select the Color/Mono settings to use.

NOTE

- The machine's color sensor is very sensitive and may perceive faded black text or an off-white background as color. If you know that your document is black and white and you want to conserve color toner, select **Mono** mode.
- If either the Cyan, Magenta or Yellow toner reaches the end of its life while printing a color document, the print job cannot be completed. Cancel your print job and select to start the print job again in **Mono** mode, as long as Black toner is available.

4. **Paper Source**

   Select the paper source setting according to your print conditions or purpose.

5. **Advanced**

   Toner Save Mode

   Select this feature to conserve toner by using less toner to print documents; printouts appear lighter, but are still legible.

   Improve Print Output

   Select this option to reduce the amount of paper curling and improve the toner fixing.

   Sleep Time

   Specify the amount of time that passes before the machine enters Sleep Mode.

Quiet Mode

Select this option to reduce printing noise.

Other Print Options

Skip Blank Page

Select this option to allow the printer driver to automatically detect blank pages and exclude them from printing.

Color Settings

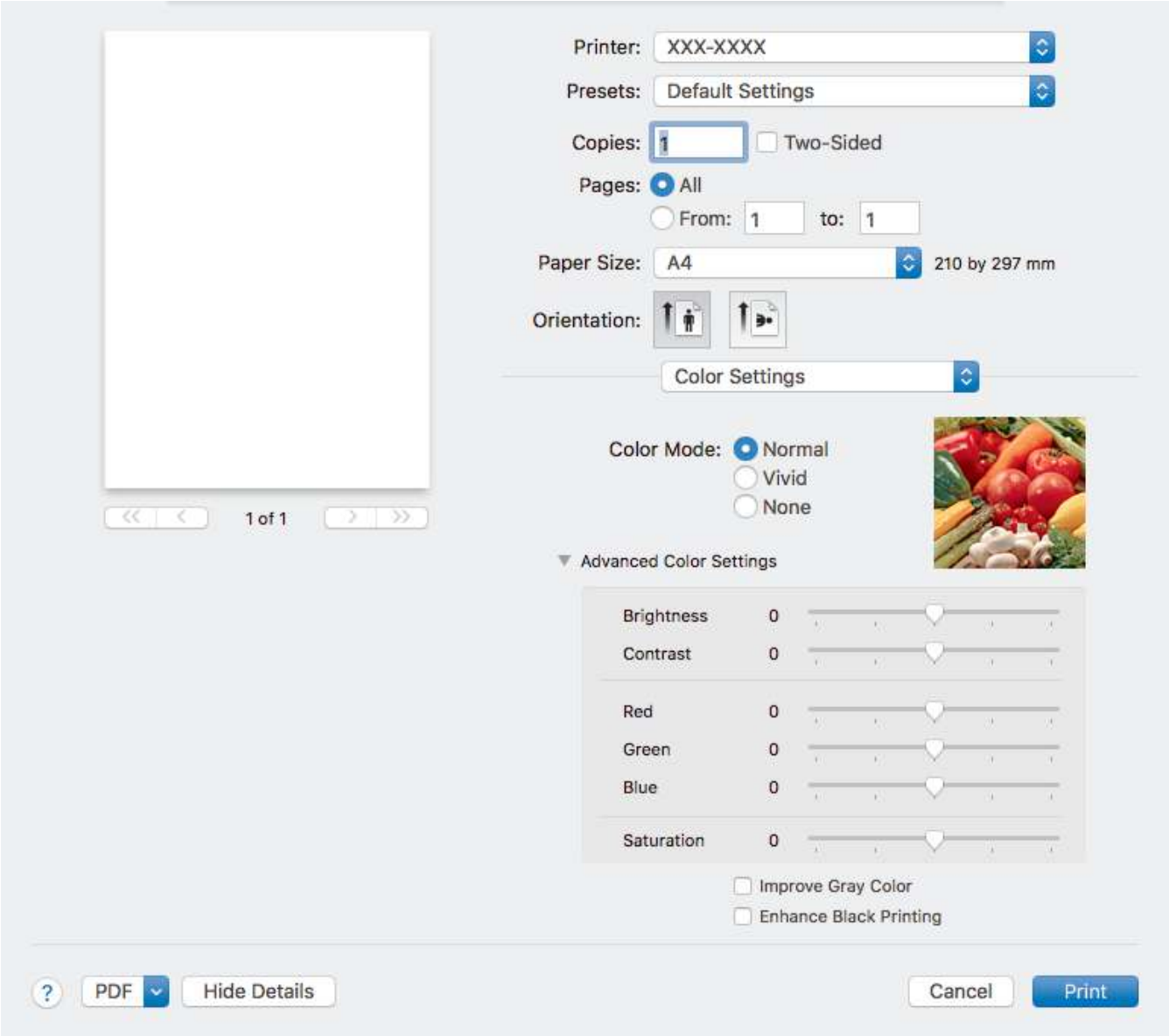

1. **Color Mode**

   Select the color mode to suit your preference.

2. **Advanced Color Settings**

   Click the disclosure triangle to select the Color Enhancement feature. This feature analyzes your image to improve its sharpness, white balance and color density. This process may take several minutes depending on the size of the image and the specifications of your computer.

Secure Print

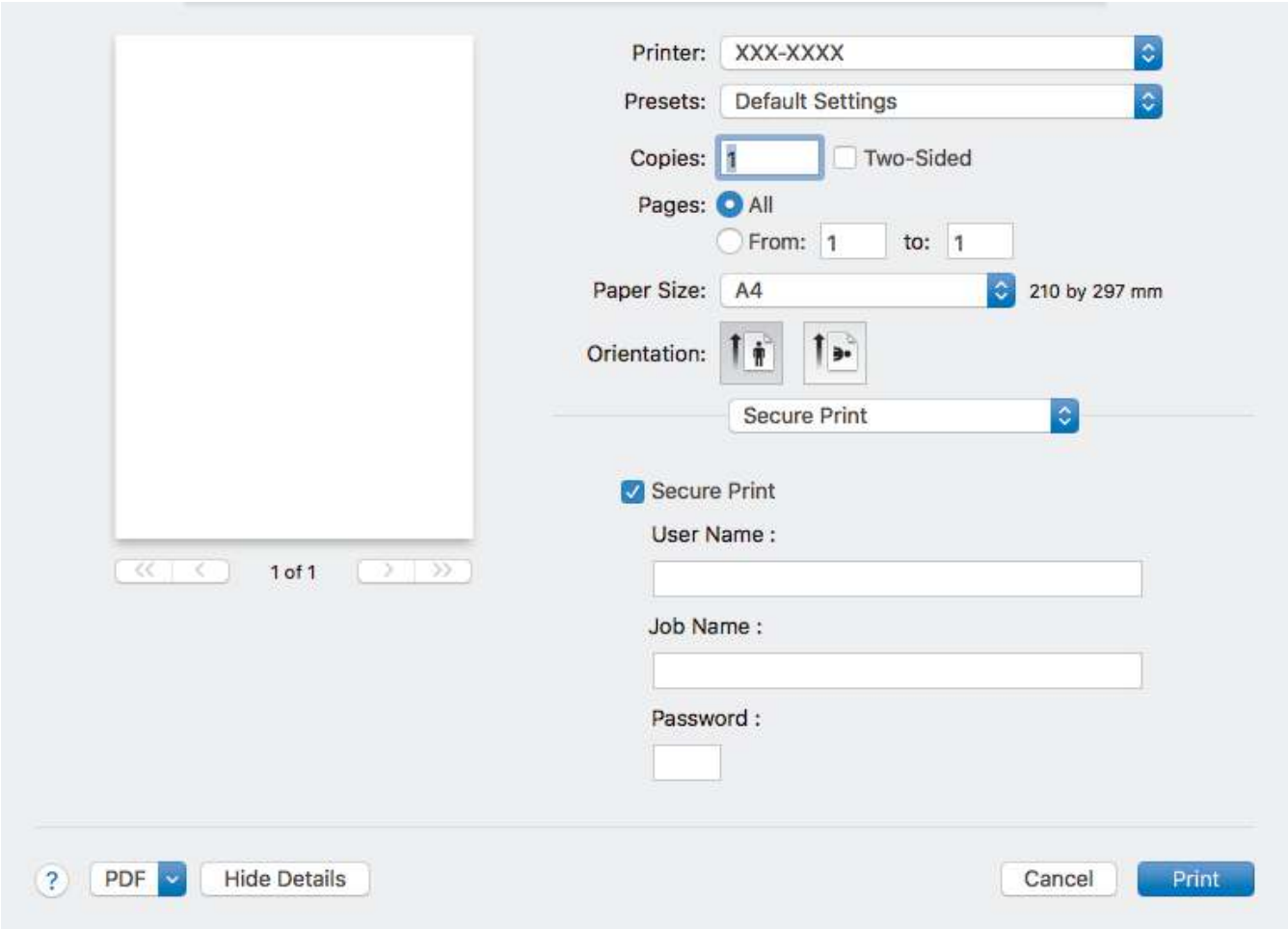

1. **Secure Print (Available only for certain models)**

   This feature ensures that confidential or sensitive documents do not print until you enter a password on the machine's control panel.

Related Information

- Print from Your Computer (Mac)

Related Topics:

- Print a Document (Mac)

Secure Print (Mac)

Use Secure Print to ensure that confidential or sensitive documents do not print until you enter a password on the machine's control panel.

- The secure data is deleted from the machine when you turn off the machine.

>> HL-L3210CW/HL-L3230CDN/HL-L3230CDW
>> HL-L3270CDW

HL-L3210CW/HL-L3230CDN/HL-L3230CDW

1. From an application, such as Apple TextEdit, click the **File** menu, and then select **Print**.
2. Select **Brother XXX-XXXX** (where XXXX is your model name).
3. Click the application pop-up menu, and then select the **Secure Print** option. The **Secure Print** options appear.
4. Select the **Secure Print** check box.
5. Type your user name, job name and a four-digit password.
6. Click **Print**.
7. On the machine's control panel, press **Secure**.
8. Press ▲ or ▼ to display your user name, and then press **OK**.
   The LCD displays the list of secured jobs for that name.
9. Press ▲ or ▼ to display the job, and then press **OK**.
10. Enter your four-digit password.
    To enter each digit, press ▲ or ▼ to select a number, and then press **OK**.
11. Press ▲ or ▼ to select the `[Print]` option, and then press **OK**.
12. Press ▲ or ▼ to enter the number of copies you want.
13. Press **OK**.
    The machine prints the data.

After you have printed the secured data, it will be cleared from the machine's memory.

HL-L3270CDW

1. From an application, such as Apple TextEdit, click the **File** menu, and then select **Print**.
2. Select **Brother XXX-XXXX** (where XXXX is your model name).
3. Click the application pop-up menu, and then select the **Secure Print** option. The **Secure Print** options appear.
4. Select the **Secure Print** check box.
5. Type your user name, job name and a four-digit password.
6. Click **Print**.
7. On the machine's control panel, press `[Functions]`.
8. Press `[Secure Print]`.
9. Press ▲ or ▼ to display user names, and then press your user name.
   The LCD displays the list of secured jobs for your name.
10. Press ▲ or ▼ to display the print job, and then press it.
11. Enter your four-digit password, and then press `[OK]`.
12. Enter the number of copies you want.
13. Press `[Start]`.

After you have printed the secured data, it will be cleared from the machine's memory.

Related Information

- Print from Your Computer (Mac)

Print a Document Using the BR-Script3 Printer Driver (PostScript® 3™ language emulation) (Mac)

The BR-Script3 printer driver lets you print PostScript® data more clearly.

- Go to your model's **Downloads** page on the Brother Solutions Center at support.brother.com to download the PS driver (BR-Script3 printer driver).
- Make sure you have added the BR-Script3 printer driver from **Printers & Scanners** in the **System Preferences** list on your Mac.

1. Make sure you have loaded the correct size paper in the paper tray.
2. From an application, such as Apple TextEdit, click the **File** menu, and then select **Print**.
3. Select your machine.
4. Type the number of copies you want in the **Copies** field.
5. Click the **Paper Size** pop-up menu, and then select your paper size.
6. Select the **Orientation** option that matches the way you want the document to print.
7. Click the print options pop-up menu, and then click **Printer Features**.

   The **Printer Features** options appear.
8. Click the **Print Quality** pop-up menu, and then select the print quality.
9. Click the **Media Type** pop-up menu, and then select the type of paper you are using.
10. Select the **Auto**, **Color**, or **Mono** option for the **Color / Mono** print setting.
11. Change other printer settings, if needed.
12. Click **Print**.

Related Information

- Print from Your Computer (Mac)

Monitor the Status of the Machine from Your Computer (Mac)

The Status Monitor utility is a configurable software tool for monitoring the status of a device, allowing you to get immediate notification of error messages, such as paper empty or paper jam, at preset update intervals. You can also access Web Based Management.

1. Click the **System Preferences** menu, select **Printers & Scanners**, and then select your machine.
2. Click the **Options & Supplies** button.
3. Click the **Utility** tab, and then click the **Open Printer Utility** button.

   Status Monitor starts.

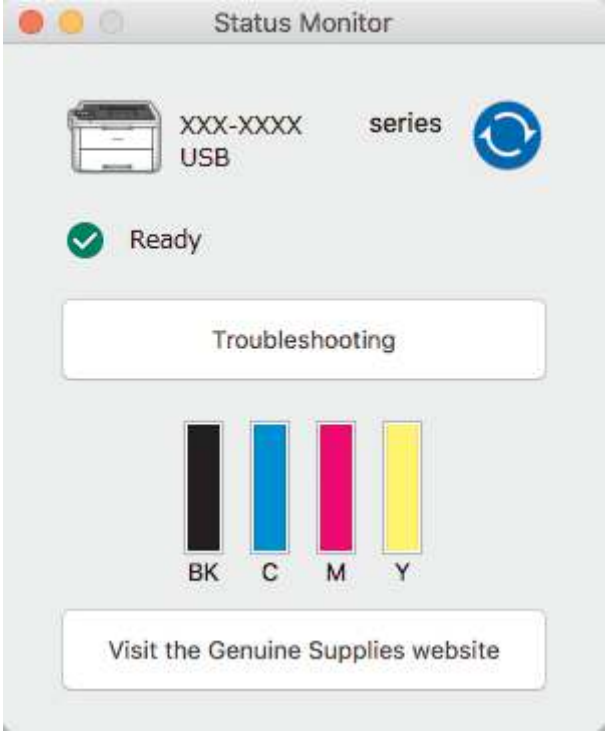

Troubleshooting

Click the **Troubleshooting** button to access the troubleshooting website.

Visit the Genuine Supplies website

Click the **Visit the Genuine Supplies website** button for more information on Brother genuine supplies.

Updating the machine's status

To view the latest machine status while the **Status Monitor** window is open, click the icon. You can set the interval at which the software updates machine status information. Click **Brother Status Monitor** in the menu bar, and then select **Preferences**.

Web Based Management (Network Connection Only)

Access the Web Based Management System by clicking the machine icon on the **Status Monitor** screen. You can use a standard Web Browser to manage your machine using HTTP (Hyper Text Transfer Protocol).

Related Information

- Print from Your Computer (Mac)

Related Topics:

- Printing Problems
- Calibrate Color Output

Cancel a Print Job

>> HL-L3210CW/HL-L3230CDN/HL-L3230CDW
>> HL-L3270CDW

HL-L3210CW/HL-L3230CDN/HL-L3230CDW

1. Press **Cancel**.

To cancel multiple print jobs, press and hold **Cancel** for four seconds.

HL-L3270CDW

1. Press .

To cancel multiple print jobs, press and hold for four seconds.

Related Information

- Print

Related Topics:

- Printing Problems

Test Print

If there are problems with print quality, follow these instructions to do a test print:

>> HL-L3210CW/HL-L3230CDN/HL-L3230CDW
>> HL-L3270CDW

HL-L3210CW/HL-L3230CDN/HL-L3230CDW

1. Press ▲ or ▼ to display the [Printer] option, and then press **OK**.
2. (HL-L3210CW/HL-L3230CDN/HL-L3230CDW) Press ▲ or ▼ to display the [Print Options] option, and then press **OK**.
3. Press ▲ or ▼ to display the [Test Print] option, and then press **OK**.
4. Press **Go**.

The machine prints the test page.

HL-L3270CDW

1. Press [Settings] > [All Settings] > [Printer] > [Print Options] > [Test Print].
2. Press [Yes].
3. Press .

Related Information

- Print

Related Topics:

- Improve the Print Quality

Network

- Configure Network Details Using the Control Panel
- Supported Basic Network Features
- Network Management Software and Utilities
- Additional Methods of Configuring Your Brother Machine for a Wireless Network
- Advanced Network Features
- Technical Information for Advanced Users

Configure Network Details Using the Control Panel

To configure the machine for your network, use the control panel's [Network] menu selections.

- For information about the network settings you can configure using the control panel, see *Related Information*: *Settings Tables*.
- You can also use management utilities, such as BRAdmin Light (Windows), BRAdmin Professional (Windows) and Web Based Management, to configure and change your Brother machine's network settings.

  See *Related Information*: *Learn about Network Management Software and Utilities*.

>> HL-L3210CW/HL-L3230CDN/HL-L3230CDW
>> HL-L3270CDW

HL-L3210CW/HL-L3230CDN/HL-L3230CDW

1. Press ▲ or ▼ to select the [Network] option, and then press **OK**.
2. Press ▲ or ▼ to select the network option you want, and then press **OK**. Repeat this step until you access the menu you want to configure, and then follow the LCD instructions.

HL-L3270CDW

1. Press [Settings] > [All Settings] > [Network].
2. Press ▲ or ▼ to display the network option you want, and then press it. Repeat this step until you access the menu you want to configure, and then follow the touchscreen LCD instructions.

Related Information

- Network

Related Topics:

- Settings Tables (HL-L3210CW/HL-L3230CDN/HL-L3230CDW)
- Settings Tables (HL-L3270CDW)
- Learn about Network Management Software and Utilities
- Supported Basic Network Features

Supported Basic Network Features

The print server supports various features depending on the operating system. Use this table to see which network features and connections are supported by each operating system.

Operating Systems	Windows 7 Windows 8 Windows 10	Windows Server 2008/2008 R2/2012/2012 R2/2016	macOS v10.11.6 macOS v10.12.x macOS v10.13.x
Printing	Yes	Yes	Yes
BRAdmin Light [1]	Yes	Yes	
BRAdmin Professional [1]	Yes	Yes	
Web Based Management [1]	Yes	Yes	Yes
Status Monitor	Yes		Yes
Driver Deployment Wizard	Yes	Yes	

- Go to your model's **Downloads** page on the Brother Solutions Center at support.brother.com to download the latest version of BRAdmin Light.
- Go to your model's **Downloads** page on the Brother Solutions Center at support.brother.com to download the latest version of BRAdmin Professional.

Related Information

- Network

[1] The default login password to manage machine settings is **initpass**. We recommend you change it to protect your machine from unauthorized access.

Network Management Software and Utilities

Configure and change your Brother machine's network settings using a management utility.

- Learn about Network Management Software and Utilities
- Change Machine Settings from Your Computer
- Change Machine Settings Using Web Based Management

Learn about Network Management Software and Utilities

Web Based Management

Web Based Management is a utility that uses a standard web browser to manage your machine using the Hyper Text Transfer Protocol (HTTP) or Hyper Text Transfer Protocol over Secure Socket Layer (HTTPS). Type your machine's IP address into your web browser to access and change your print server settings.

BRAdmin Light (Windows)

BRAdmin Light is a utility for the initial setup of Brother network-connected devices. This utility can search for Brother products on your network, view the status and configure the basic network settings, such as IP address.

Go to your model's **Downloads** page on the Brother Solutions Center at support.brother.com to download BRAdmin Light.

- If using Windows Firewall, or the firewall function of an anti-spyware or antivirus application, temporarily disable them. When you are sure you can print, configure the software settings following the instructions.

BRAdmin Professional (Windows)

BRAdmin Professional is a utility for more advanced management of network-connected Brother devices. This utility can search for Brother products on your network and view the device status from an easy-to-read Windows Explorer-style screen that changes color to identify the status of each device. You can configure network and device settings, and update device firmware from a Windows computer on your LAN. BRAdmin Professional can also log activity of Brother devices on your network and export the log data. For users who want to monitor locally-connected machines, install the Print Auditor Client software on the client computer. This utility allows you to use BRAdmin Professional to monitor machines that are connected to a client computer via the USB interface.

- Go to your model's **Downloads** page on the Brother Solutions Center at support.brother.com to download the latest version of BRAdmin Professional.
- Node name: The node name appears in the current BRAdmin Professional window. The default node name is "BRNxxxxxxxxxxxx" for a wired network or "BRWxxxxxxxxxxxx" for a wireless network (where "xxxxxxxxxxxx" is your machine's MAC Address / Ethernet address).
- If using Windows Firewall, or the firewall function of an anti-spyware or antivirus application, temporarily disable them. When you are sure you can print, configure the software settings following the instructions.

Related Information

- Network Management Software and Utilities

Related Topics:

- Change Machine Settings Using Web Based Management

Additional Methods of Configuring Your Brother Machine for a Wireless Network

Related Models: HL-L3210CW/HL-L3230CDW/HL-L3270CDW

To connect your machine to your wireless network, we recommend using the Brother installation disc.

- Before Configuring Your Brother Machine for a Wireless Network
- Configure Your Machine for a Wireless Network
- Configure Your Machine for a Wireless Network Using the One Push Method of Wi-Fi Protected Setup™ (WPS)
- Configure Your Machine for a Wireless Network Using the PIN Method of Wi-Fi Protected Setup™ (WPS)
- Configure Your Machine for a Wireless Network Using the Machine's Control Panel Setup Wizard
- Configure Your Machine for a Wireless Network When the SSID Is Not Broadcast
- Configure Your Machine for an Enterprise Wireless Network
- Use Wi-Fi Direct®

Before Configuring Your Brother Machine for a Wireless Network

Related Models: HL-L3210CW/HL-L3230CDW/HL-L3270CDW

Before attempting to configure a wireless network, confirm the following:

- If you are using an enterprise wireless network, you must know the User ID and Password.
- To achieve optimum results with normal everyday document printing, place the Brother machine as close to the wireless LAN access point/router as possible with minimal obstructions. Large objects and walls between the two devices and interference from other electronic devices can affect the data transfer speed of your documents.

  Due to these factors, wireless may not be the best method of connection for all types of documents and applications. If you are printing large files, such as multi-page documents with mixed text and large graphics, you may want to consider selecting wired Ethernet for faster data transfer (supported models only), or USB for the fastest throughput speed.
- Although the Brother machine can be used in both a wired and wireless network (supported models only), only one connection method can be used at a time. However, a wireless network connection and Wi-Fi Direct connection, or a wired network connection (supported models only) and Wi-Fi Direct connection can be used at the same time.

If you do not know the security information (for example, Network Name (SSID) and Network Key), consult the router manufacturer, your system administrator, or your Internet provider.

Related Information

- Additional Methods of Configuring Your Brother Machine for a Wireless Network

Configure Your Machine for a Wireless Network

Related Models: HL-L3210CW/HL-L3230CDW/HL-L3270CDW

1. Turn on your computer and insert the Brother installation disc into your computer.
   - For Windows, follow these instructions:
   - For Mac, click **Driver Download** to go to the Brother Solutions Center. Follow the on-screen instructions to install printer drivers.
2. The opening screen appears automatically.

   Choose your language, and then follow the on-screen instructions.

If the Brother screen does not appear, do the following:

- (Windows 7)

  Go to **Computer**. Double-click the CD/DVD icon, and then double-click **start.exe**.
- (Windows 8 and Windows 10)

  Click the (**File Explorer**) icon on the taskbar, and then go to **Computer** (**This PC**). Double-click the CD/DVD icon, and then double-click **start.exe**.
- If the **User Account Control** screen appears, click **Yes**.

3. Choose **Wireless Network Connection (Wi-Fi)**, and then click **Next**.
4. Follow the on-screen instructions.

You have completed the wireless network setup. To install the **Full Driver & Software Package** necessary for operating your machine, insert the Brother installation disc into your computer, or go to your model's **Downloads** page on the Brother Solutions Center at support.brother.com.

Related Information

- Additional Methods of Configuring Your Brother Machine for a Wireless Network

Configure Your Machine for a Wireless Network Using the One Push Method of Wi-Fi Protected Setup™ (WPS)

Related Models: HL-L3210CW/HL-L3230CDW/HL-L3270CDW

If your wireless access point/router supports WPS (PBC: Push Button Configuration), you can use WPS from your machine's control panel menu to configure your wireless network settings.

Routers or access points that support WPS are marked with this symbol:

>> HL-L3210CW/HL-L3230CDW
>> HL-L3270CDW

HL-L3210CW/HL-L3230CDW

1. Press ▲ or ▼ to select the [Network] option, and then press **OK**.
2. Press ▲ or ▼ to select the [WLAN] option, and then press **OK**.
3. Press ▲ or ▼ to select the [WPS] option, and then press **OK**.
4. When [WLAN Enable?] appears, select On.

   This will start the wireless setup wizard.
5. When the LCD displays [Press Key on rtr], press the WPS button on your wireless access point/router. Press ▲ on the machine's control panel. Your machine will automatically detect your wireless access point/router and try to connect to your wireless network.

If your wireless device is connected successfully, the machine's LCD displays [Connected].

You have completed the wireless network setup. To install the **Full Driver & Software Package** necessary for operating your machine, insert the Brother installation disc into your computer, or go to your model's **Downloads** page on the Brother Solutions Center at support.brother.com.

HL-L3270CDW

1. Press [Settings] > [All Settings] > [Network] > [WLAN] > [WPS].
2. When [Enable WLAN?] appears, press [Yes].

   This will start the wireless setup wizard. To cancel, press [No].
3. When the touchscreen displays [Start WPS on your wireless access point/router, then press [OK].], press the WPS button on your wireless access point/router. Then press [OK] on your machine. Your machine will automatically detect your wireless access point/router and try to connect to your wireless network.

If your wireless device is connected successfully, the machine's LCD displays [Connected].

You have completed the wireless network setup. To install the **Full Driver & Software Package** necessary for operating your machine, insert the Brother installation disc into your computer, or go to your model's **Downloads** page on the Brother Solutions Center at support.brother.com.

Related Information

- Additional Methods of Configuring Your Brother Machine for a Wireless Network

Related Topics:

- Wireless LAN Report Error Codes

Configure Your Machine for a Wireless Network Using the PIN Method of Wi-Fi Protected Setup™ (WPS)

Related Models: HL-L3210CW/HL-L3230CDW/HL-L3270CDW

If your wireless LAN access point/router supports WPS, you can use the Personal Identification Number (PIN) Method to configure your wireless network settings.

The PIN Method is one of the connection methods developed by the Wi-Fi Alliance®. By submitting a PIN created by an Enrollee (your machine) to the Registrar (a device that manages the wireless LAN), you can set up the wireless network and security settings. For more information on how to access WPS mode, see the instructions provided with your wireless access point/router.

Type A

Connection when the wireless LAN access point/router (1) doubles as the Registrar:

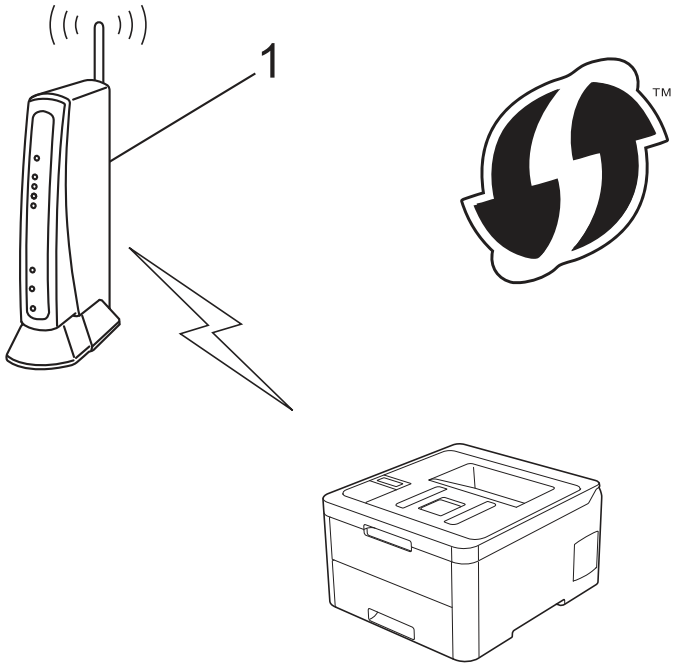

Type B

Connection when another device (2), such as a computer, is used as the Registrar:

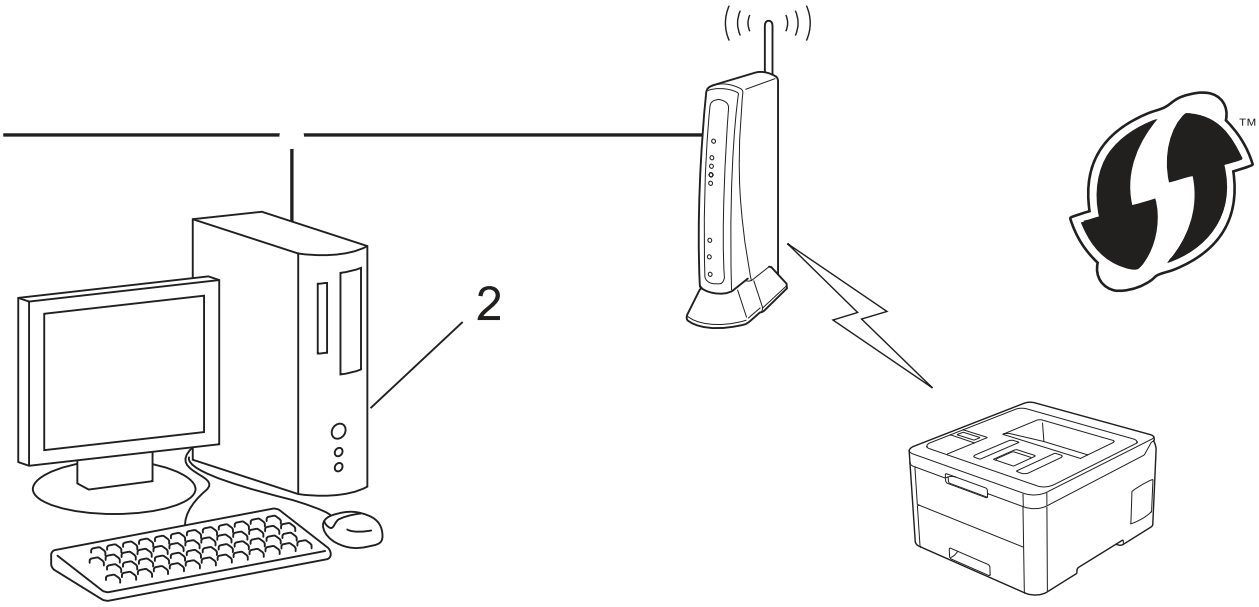

Routers or access points that support WPS are marked with this symbol:

>> HL-L3210CW/HL-L3230CDW
>> HL-L3270CDW

HL-L3210CW/HL-L3230CDW

1. Press ▲ or ▼ to select the `[Network]` option, and then press **OK**.
2. Press ▲ or ▼ to select the `[WLAN]` option, and then press **OK**.
3. Press ▲ or ▼ to select the `[WPS w/PIN Code]` option, and then press **OK**.
4. When `[WLAN Enable?]` appears, select On.

   This will start the wireless setup wizard.
5. The LCD displays an eight-digit PIN and the machine starts searching for a wireless LAN access point/router.
6. Using a computer connected to the network, in your browser's address bar, type the IP address of the device you are using as the Registrar. (For example: http://192.168.1.2)
7. Go to the WPS settings page and type the PIN, and then follow the on-screen instructions.

- The Registrar is usually the wireless LAN access point/router.
- The settings page will differ depending on the brand of wireless LAN access point/router. For more information, see the instructions supplied with your wireless LAN access point/router.

If you are using a Windows 7, Windows 8, or Windows 10 computer as a Registrar, complete the following steps:

8. Do one of the following:
   - Windows 7

     Click **(Start)** > **Devices and Printers** > **Add a device**.

- Windows 8

  Move your mouse to the lower right corner of your desktop. When the menu bar appears, click **Settings** > **Control Panel** > **Hardware and Sound** > **Devices and Printers** > **Add a device**.
- Windows 10

  Click > **Windows System** > **Control Panel**. In the **Hardware and Sound** group, click **Add a device**.

- To use a Windows 7, Windows 8, or Windows 10 computer as a Registrar, you must register it to your network in advance. For more information, see the instructions supplied with your wireless LAN access point/router.
- If you use Windows 7, Windows 8, or Windows 10 as a Registrar, you can install the printer driver after the wireless configuration by following the on-screen instructions. To install the **Full Driver & Software Package** necessary for operating your machine, insert the Brother installation disc into your computer or go to your model's **Downloads** page on the Brother Solutions Center at support.brother.com.

9. Select your machine and click **Next**.
10. Type the PIN displayed on the machine's LCD, and then click **Next**.
11. (Windows 7) Select your network, and then click **Next**.
12. Click **Close**.

If your wireless device is connected successfully, the machine's LCD displays `[Connected]`.

You have completed the wireless network setup. To install the **Full Driver & Software Package** necessary for operating your machine, insert the Brother installation disc into your computer, or go to your model's **Downloads** page on the Brother Solutions Center at support.brother.com.

HL-L3270CDW

1. Press `[Settings]` > `[All Settings]` > `[Network]` > `[WLAN]` > `[WPS w/ PIN Code]`.
2. When `[Enable WLAN?]` appears, press `[Yes]`.

   This will start the wireless setup wizard. To cancel, press `[No]`.
3. The LCD displays an eight-digit PIN and the machine starts searching for a wireless LAN access point/router.
4. Using a computer connected to the network, in your browser's address bar, type the IP address of the device you are using as the Registrar. (For example: http://192.168.1.2)
5. Go to the WPS settings page and type the PIN, and then follow the on-screen instructions.

- The Registrar is usually the wireless LAN access point/router.
- The settings page will differ depending on the brand of wireless LAN access point/router. For more information, see the instructions supplied with your wireless LAN access point/router.

If you are using a Windows 7, Windows 8, or Windows 10 computer as a Registrar, complete the following steps:

6. Do one of the following:
   - Windows 7

     Click **(Start)** > **Devices and Printers** > **Add a device**.
   - Windows 8

     Move your mouse to the lower right corner of your desktop. When the menu bar appears, click **Settings** > **Control Panel** > **Hardware and Sound** > **Devices and Printers** > **Add a device**.
   - Windows 10

     Click > **Windows System** > **Control Panel**. In the **Hardware and Sound** group, click **Add a device**.

- To use a Windows 7, Windows 8, or Windows 10 computer as a Registrar, you must register it to your network in advance. For more information, see the instructions supplied with your wireless LAN access point/router.
- If you use Windows 7, Windows 8, or Windows 10 as a Registrar, you can install the printer driver after the wireless configuration by following the on-screen instructions. To install the **Full Driver & Software Package** necessary for operating your machine, insert the Brother installation disc into your computer or go to your model's **Downloads** page on the Brother Solutions Center at support.brother.com.

7. Select your machine and click **Next**.
8. Type the PIN displayed on the machine's LCD, and then click **Next**.
9. (Windows 7) Select your network, and then click **Next**.
10. Click **Close**.

If your wireless device is connected successfully, the machine's LCD displays `[Connected]`.

You have completed the wireless network setup. To install **Full Driver & Software Package** necessary for operating your device, insert the Brother installation disc into your computer or go to your model's **Downloads** page on the Brother Solutions Center at support.brother.com.

Related Information

- Additional Methods of Configuring Your Brother Machine for a Wireless Network

Related Topics:

- Wireless LAN Report Error Codes

Configure Your Machine for a Wireless Network Using the Machine's Control Panel Setup Wizard

Related Models: HL-L3210CW/HL-L3230CDW/HL-L3270CDW

>> HL-L3210CW/HL-L3230CDW
>> HL-L3270CDW

HL-L3210CW/HL-L3230CDW

Before configuring your machine, we recommend writing down your wireless network settings. You will need this information before you continue with the configuration.

1. Check and record the current wireless network settings of the computer to which you are connecting.

Network Name (SSID)

Network Key

For example:

Network Name (SSID)
HELLO

Network Key
12345

- Your access point/router may support the use of multiple WEP keys, however your Brother machine supports the use of the first WEP key only.
- If you need assistance during setup and want to contact Brother Customer Service, make sure you have your SSID (Network Name) and Network Key ready. We cannot assist you in locating this information.
- If you do not know this information (SSID and Network Key), you cannot continue the wireless setup.

  How can I find this information?

  - Check the documentation provided with your wireless access point/router.
  - The initial SSID could be the manufacturer's name or the model name.
  - If you do not know the security information, please consult the router manufacturer, your system administrator, or your Internet provider.

2. Press ▲ or ▼ to select the `[Network]` option, and then press **OK**.
3. Press ▲ or ▼ to select the `[WLAN]` option, and then press **OK**.
4. Press ▲ or ▼ to select the `[Setup Wizard]` option, and then press **OK**.
5. When `[WLAN Enable?]` appears, select On.

   This will start the wireless setup wizard.
6. The machine will search for your network and display a list of available SSIDs. When a list of SSIDs appears, press ▲ or ▼ to select the SSID you want.
7. Press **OK**.
8. Do one of the following:

- If you are using an authentication and encryption method that requires a Network Key, enter the Network Key you wrote down in the first step.

  Enter the key, and then press **OK** to apply your settings.

  To apply the settings, select [Yes].
- If your authentication method is Open System and your encryption mode is None, go to the next step.

9. The machine attempts to connect to the wireless device you have selected.

If your wireless device is connected successfully, the machine's LCD displays [Connected].

You have completed the wireless network setup. To install the **Full Driver & Software Package** necessary for operating your machine, insert the Brother installation disc into your computer, or go to your model's **Downloads** page on the Brother Solutions Center at support.brother.com.

HL-L3270CDW

Before configuring your machine, we recommend writing down your wireless network settings. You will need this information before you continue with the configuration.

1. Check and record the current wireless network settings of the computer to which you are connecting.

Network Name (SSID)

Network Key

For example:

Network Name (SSID)
HELLO

Network Key
12345

- Your access point/router may support the use of multiple WEP keys, however your Brother machine supports the use of the first WEP key only.
- If you need assistance during setup and want to contact Brother Customer Service, make sure you have your SSID (Network Name) and Network Key ready. We cannot assist you in locating this information.
- If you do not know this information (SSID and Network Key), you cannot continue the wireless setup.

  How can I find this information?

  - Check the documentation provided with your wireless access point/router.
  - The initial SSID could be the manufacturer's name or the model name.
  - If you do not know the security information, please consult the router manufacturer, your system administrator, or your Internet provider.

2. Press [Settings] > [All Settings] > [Network] > [WLAN] > [Setup Wizard].
3. When [Enable WLAN?] appears, press [Yes].

   This will start the wireless setup wizard. To cancel, press [No].
4. The machine will search for your network and display a list of available SSIDs.

   If a list of SSIDs is displayed, press ▲ or ▼ to display the SSID to which you want to connect, and then press the SSID.
5. Press [OK].

6. Do one of the following:
   - If you are using an authentication and encryption method that requires a Network Key, enter the Network Key you wrote down in the first step.

     When you have entered all the characters, press [OK].
   - If your authentication method is Open System and your encryption mode is None, go to the next step.
7. The machine attempts to connect to the wireless device you have selected.

If your wireless device is connected successfully, the machine's LCD displays [Connected].

You have completed the wireless network setup. To install **Full Driver & Software Package** necessary for operating your device, insert the Brother installation disc into your computer or go to your model's **Downloads** page on the Brother Solutions Center at support.brother.com.

Related Information

- Additional Methods of Configuring Your Brother Machine for a Wireless Network

Related Topics:

- How to Enter Text on Your Brother Machine
- Wireless LAN Report Error Codes

Configure Your Machine for a Wireless Network When the SSID Is Not Broadcast

Related Models: HL-L3210CW/HL-L3230CDW/HL-L3270CDW

>> HL-L3210CW/HL-L3230CDW
>> HL-L3270CDW

HL-L3210CW/HL-L3230CDW

Before configuring your machine, we recommend writing down your wireless network settings. You will need this information before you continue with the configuration.

1. Check and write down the current wireless network settings.

Network Name (SSID)

Communication Mode	Authentication Method	Encryption Mode	Network Key
Infrastructure	Open System	NONE	-
		WEP	
	Shared Key	WEP	
	WPA/WPA2-PSK	AES	
		TKIP	

For example:

Network Name (SSID)
HELLO

Communication Mode	Authentication Method	Encryption Mode	Network Key
Infrastructure	WPA2-PSK	AES	12345678

If your router uses WEP encryption, enter the key used as the first WEP key. Your Brother machine supports the use of the first WEP key only.

2. Press ▲ or ▼ to select the `[Network]` option, and then press **OK**.
3. Press ▲ or ▼ to select the `[WLAN]` option, and then press **OK**.
4. Press ▲ or ▼ to select the `[Setup Wizard]` option, and then press **OK**.
5. When `[WLAN Enable?]` appears, select On.

   This will start the wireless setup wizard.
6. The machine will search for your network and display a list of available SSIDs. Press ▲ or ▼ to select the `[<New SSID>]` option, and then press **OK**.
7. Enter the SSID name, and then press **OK**.
8. Select the `[Infrastructure]` option, and then press **OK**.
9. Press ▲ or ▼ to select the Authentication Method you want, and then press **OK**.
10. Do one of the following:
    - If you selected the `[Open System]` option, press ▲ or ▼ to select the Encryption Type `[None]` or `[WEP]`, and then press **OK**.

If you selected the [WEP] option for Encryption Type, enter the WEP key, and then press **OK**.

- If you selected the [Shared Key] option, enter the WEP key, and then press **OK**.
- If you selected the [WPA/WPA2-PSK] option, press ▲ or ▼ to select the Encryption Type [TKIP+AES] or [AES], and then press **OK**.

  Enter the WPA™ key, and then press **OK**.

Your Brother machine supports the use of the first WEP key only.

11. To apply the settings, select [Yes].
12. The machine will attempt to connect to the wireless device you have selected.

If your wireless device is connected successfully, the machine's LCD displays [Connected].

You have completed the wireless network setup. To install the **Full Driver & Software Package** necessary for operating your machine, insert the Brother installation disc into your computer, or go to your model's **Downloads** page on the Brother Solutions Center at support.brother.com.

HL-L3270CDW

Before configuring your machine, we recommend writing down your wireless network settings. You will need this information before you continue with the configuration.

1. Check and write down the current wireless network settings.

Network Name (SSID)

Communication Mode	Authentication Method	Encryption Mode	Network Key
Infrastructure	Open System	NONE	-
		WEP	
	Shared Key	WEP	
	WPA/WPA2-PSK	AES	
		TKIP	

For example:

Network Name (SSID)
HELLO

Communication Mode	Authentication Method	Encryption Mode	Network Key
Infrastructure	WPA2-PSK	AES	12345678

If your router uses WEP encryption, enter the key used as the first WEP key. Your Brother machine supports the use of the first WEP key only.

2. Press [Settings] > [All Settings] > [Network] > [WLAN] > [Setup Wizard].
3. When [Enable WLAN?] appears, press [Yes].

   This will start the wireless setup wizard. To cancel, press [No].
4. The machine will search for your network and display a list of available SSIDs. Press ▲ or ▼ to display the [<New SSID>] option.
5. Press [<New SSID>], and then press [OK].
6. Enter the SSID name, and then press [OK].
7. Press [Infrastructure] when instructed.

8. Select the Authentication Method.
9. Do one of the following:
   - If you selected the [Open System] option, press [None] or [WEP].

     If you selected the [WEP] option for Encryption type, enter the WEP key, and then press [OK].
   - If you selected the [Shared Key] option, enter the WEP key, and then press [OK].
   - If you selected the [WPA/WPA2-PSK] option, press [TKIP+AES] or [AES].

     Enter the WPA™ key, and then press [OK].

Your Brother machine supports the use of the first WEP key only.

10. The machine attempts to connect to the wireless device you have selected.

If your wireless device is connected successfully, the machine's LCD displays [Connected].

You have completed the wireless network setup. To install **Full Driver & Software Package** necessary for operating your device, insert the Brother installation disc into your computer or go to your model's **Downloads** page on the Brother Solutions Center at support.brother.com.

Related Information

- Additional Methods of Configuring Your Brother Machine for a Wireless Network

Related Topics:

- I Cannot Complete the Wireless Network Setup Configuration
- How to Enter Text on Your Brother Machine
- Wireless LAN Report Error Codes

Configure Your Machine for an Enterprise Wireless Network

Related Models: HL-L3210CW/HL-L3230CDW/HL-L3270CDW

>> HL-L3210CW/HL-L3230CDW
>> HL-L3270CDW

HL-L3210CW/HL-L3230CDW

Before configuring your machine, we recommend writing down your wireless network settings. You will need this information before you continue with the configuration.

1. Check and record the current wireless network settings.

Network Name (SSID)

Communication Mode	Authentication Method	Encryption Mode	User ID	Password
Infrastructure	LEAP	CKIP		
	EAP-FAST/NONE	AES		
		TKIP		
	EAP-FAST/MS-CHAPv2	AES		
		TKIP		
	EAP-FAST/GTC	AES		
		TKIP		
	PEAP/MS-CHAPv2	AES		
		TKIP		
	PEAP/GTC	AES		
		TKIP		
	EAP-TTLS/CHAP	AES		
		TKIP		
	EAP-TTLS/MS-CHAP	AES		
		TKIP		
	EAP-TTLS/MS-CHAPv2	AES		
		TKIP		
	EAP-TTLS/PAP	AES		
		TKIP		
	EAP-TLS	AES		-
		TKIP		-

For example:

Network Name (SSID)
HELLO

Communication Mode	Authentication Method	Encryption Mode	User ID	Password
Infrastructure	EAP-FAST/MS-CHAPv2	AES	Brother	12345678

- If you configure your machine using EAP-TLS authentication, you must install the client certificate issued by a CA before you start configuration. Contact your network administrator about the client certificate. If you have installed more than one certificate, we recommend writing down the certificate name you want to use.
- If you verify your machine using the common name of the server certificate, we recommend writing down the common name before you start configuration. Contact your network administrator about the common name of the server certificate.

2. Press ▲ or ▼ to select the `[Network]` option, and then press **OK**.
3. Press ▲ or ▼ to select the `[WLAN]` option, and then press **OK**.
4. Press ▲ or ▼ to select the `[Setup Wizard]` option, and then press **OK**.
5. When `[WLAN Enable?]` appears, select On.

   This will start the wireless setup wizard.
6. The machine will search for your network and display a list of available SSIDs. Press ▲ or ▼ to select the `[<New SSID>]` option, and then press **OK**.
7. Enter the SSID name, and then press **OK**.
8. Select the `[Infrastructure]` option, and then press **OK**.
9. Press ▲ or ▼ to select the Authentication Method you want, and then press **OK**.
10. Do one of the following:
    - If you selected the `[LEAP]` option, enter the user ID, and then press **OK**.

      Enter the Password, and then press **OK**.
    - If you selected the `[EAP-FAST]`, `[PEAP]` or `[EAP-TTLS]` option, press ▲ or ▼ to select the Inner Authentication Method `[NONE]`, `[CHAP]`, `[MS-CHAP]`, `[MS-CHAPv2]`, `[PAP]` or `[GTC]`, and then press **OK**.

Depending on your Authentication Method, the Inner Authentication Method selections differ.

Press ▲ or ▼ to select the Encryption Type `[TKIP+AES]` or `[AES]`, and then press **OK**.

Press ▲ or ▼ to select the Verification Method `[No Verification]`, `[CA]` or `[CA+Server ID]`, and then press **OK**.

- If you selected the `[CA+Server ID]` option, enter the server ID, user ID and password (if required), and then press **OK** for each option.
- For other selections, enter the user ID and the Password, and then press **OK** for each option.

If you have not imported a CA certificate into your machine, the machine will display the message `[No Verification]`.

- If you selected the `[EAP-TLS]` option, press ▲ or ▼ to select the Encryption Type `[TKIP+AES]` or `[AES]`, and then press **OK**.

  When the machine displays a list of available Client Certificates, select the certificate you want.

  Press ▲ or ▼ to select the Verification Method `[No Verification]`, `[CA]` or `[CA+Server ID]`, and then press **OK**.
  - If you selected the `[CA+Server ID]` option, enter the server ID and user ID, and then press **OK** for each option.
  - For other selections, enter the user ID, and then press **OK**.

11. To apply the settings, press ▲. To cancel, press ▼.
12. The machine will attempt to connect to the wireless device you have selected.

If your wireless device is connected successfully, the machine's LCD displays `[Connected]`.

You have completed the wireless network setup. To install **Full Driver & Software Package** necessary for operating your device, insert the Brother installation disc into your computer or go to your model's **Downloads** page on the Brother Solutions Center at support.brother.com.

HL-L3270CDW

Before configuring your machine, we recommend writing down your wireless network settings. You will need this information before you continue with the configuration.

1. Check and record the current wireless network settings.

Network Name (SSID)

Communication Mode	Authentication Method	Encryption Mode	User ID	Password
Infrastructure	LEAP	CKIP		
	EAP-FAST/NONE	AES		
		TKIP		
	EAP-FAST/MS-CHAPv2	AES		
		TKIP		
	EAP-FAST/GTC	AES		
		TKIP		
	PEAP/MS-CHAPv2	AES		
		TKIP		
	PEAP/GTC	AES		
		TKIP		
	EAP-TTLS/CHAP	AES		
		TKIP		
	EAP-TTLS/MS-CHAP	AES		
		TKIP		
	EAP-TTLS/MS-CHAPv2	AES		
		TKIP		
	EAP-TTLS/PAP	AES		
		TKIP		
	EAP-TLS	AES		-
		TKIP		-

For example:

Network Name (SSID)
HELLO

Communication Mode	Authentication Method	Encryption Mode	User ID	Password
Infrastructure	EAP-FAST/MS-CHAPv2	AES	Brother	12345678

- If you configure your machine using EAP-TLS authentication, you must install the client certificate issued by a CA before you start configuration. Contact your network administrator about the client certificate. If you have installed more than one certificate, we recommend writing down the certificate name you want to use.
- If you verify your machine using the common name of the server certificate, we recommend writing down the common name before you start configuration. Contact your network administrator about the common name of the server certificate.

2. Press [Settings] > [All Settings] > [Network] > [WLAN] > [Setup Wizard].
3. When [Enable WLAN?] appears, press [Yes].

   This will start the wireless setup wizard. To cancel, press [No].
4. The machine will search for your network and display a list of available SSIDs. Press ▲ or ▼ to display the [<New SSID>] option.
5. Press [<New SSID>], and then press [OK].
6. Enter the SSID name, and then press [OK].
7. Press [Infrastructure] when instructed.
8. Select the Authentication Method.
9. Do one of the following:
   - If you selected the [LEAP] option, enter the user ID, and then press [OK]. Enter the Password, and then press [OK].
   - If you selected the [EAP-FAST], [PEAP] or [EAP-TTLS] option, press ▲ or ▼ to select the Inner Authentication Method [NONE], [CHAP], [MS-CHAP], [MS-CHAPv2], [GTC] or [PAP].

     Depending on your Authentication Method, the Inner Authentication Method selections differ.

     Select the Encryption Type [TKIP+AES] or [AES].

     Select the Verification Method [No Verification], [CA] or [CA + Server ID].
     - If you selected the [CA + Server ID] option, enter the server ID, user ID and password (if required), and then press [OK] for each option.
     - For other selections, enter the user ID and Password, and then press [OK] for each option.

     If you have not imported a CA certificate into your machine, the machine displays [No Verification].
   - If you selected the [EAP-TLS] option, select the Encryption Type [TKIP+AES] or [AES].

     When the machine displays a list of available Client Certificates, select the certificate you want.

     Select the Verification Method [No Verification], [CA] or [CA + Server ID].
     - If you selected the [CA + Server ID] option, enter the server ID and user ID, and then press [OK] for each option.
     - For other selections, enter the user ID, and then press [OK].
10. The machine attempts to connect to the wireless device you have selected.

If your wireless device is connected successfully, the machine's LCD displays [Connected].

You have completed the wireless network setup. To install **Full Driver & Software Package** necessary for operating your device, insert the Brother installation disc into your computer or go to your model's **Downloads** page on the Brother Solutions Center at support.brother.com.

Related Information

- Additional Methods of Configuring Your Brother Machine for a Wireless Network

Related Topics:

- Wireless LAN Report Error Codes

Use Wi-Fi Direct®

- Print from Your Mobile Device Using Wi-Fi Direct
- Configure Your Wi-Fi Direct Network
- I Cannot Complete the Wireless Network Setup Configuration

Print from Your Mobile Device Using Wi-Fi Direct

Related Models: HL-L3210CW/HL-L3230CDW/HL-L3270CDW

Wi-Fi Direct is one of the wireless configuration methods developed by the Wi-Fi Alliance®. It allows you to configure a secured wireless network between your Brother machine and a mobile device, such as an Android™ device, Windows device, iPhone, iPod touch, or iPad, without using an access point. Wi-Fi Direct supports wireless network configuration using the one-push or PIN Method of Wi-Fi Protected Setup™ (WPS). You can also configure a wireless network by manually setting an SSID and password. Your Brother machine's Wi-Fi Direct feature supports WPA2™ security with AES encryption.

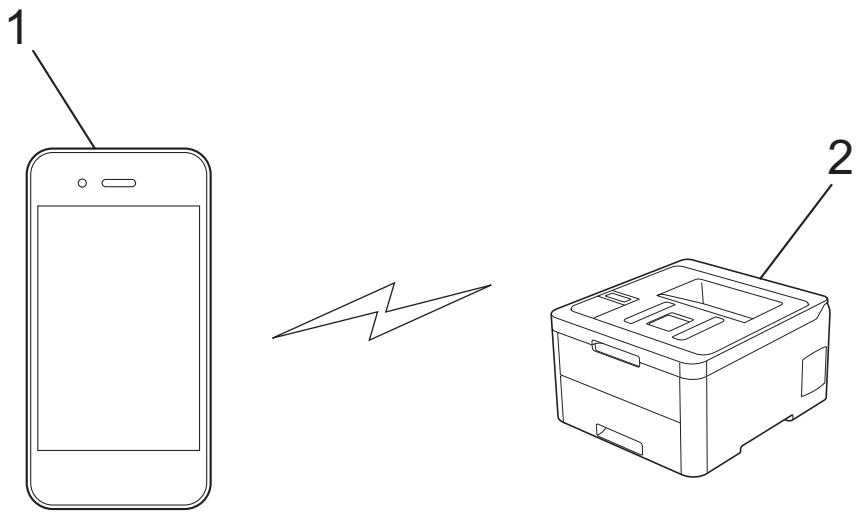

1. Mobile device
2. Your Brother machine

- Although the Brother machine can be used in both a wired and wireless network, only one connection method can be used at a time. However, a wireless network connection and Wi-Fi Direct connection, or a wired network connection (supported models only) and Wi-Fi Direct connection can be used at the same time.
- The Wi-Fi Direct-supported device can become a Group Owner (G/O). When configuring the Wi-Fi Direct network, the G/O serves as an access point.

Related Information

- Use Wi-Fi Direct®

Configure Your Wi-Fi Direct Network

Configure your Wi-Fi Direct network settings from your machine's control panel.

- Wi-Fi Direct Network Configuration Overview
- Configure Your Wi-Fi Direct Network Using the One-Push Method
- Configure Your Wi-Fi Direct Network Using the One-Push Method of Wi-Fi Protected Setup™ (WPS)
- Configure Your Wi-Fi Direct Network Using the PIN Method
- Configure Your Wi-Fi Direct Network Using the PIN Method of Wi-Fi Protected Setup™ (WPS)
- Configure Your Wi-Fi Direct Network Manually

Wi-Fi Direct Network Configuration Overview

Related Models: HL-L3210CW/HL-L3230CDW/HL-L3270CDW

The following instructions offer five methods for configuring your Brother machine in a wireless network environment. Select the method you prefer for your environment:

Check your mobile device for configuration.

1. Does your mobile device support Wi-Fi Direct?

Option	Description
Yes	Go to Step 2
No	Go to Step 3

2. Does your mobile device support one-push configuration for Wi-Fi Direct?

Option	Description
Yes	See *Related Information*: *Configure Your Wi-Fi Direct Network Using the One-Push Method*.
No	See *Related Information*: *Configure Your Wi-Fi Direct Network Using the PIN Method*.

3. Does your mobile device support Wi-Fi Protected Setup™ (WPS)?

Option	Description
Yes	Go to Step 4
No	See *Related Information*: *Configure Your Wi-Fi Direct Network Manually*.

4. Does your mobile device support one-push configuration for Wi-Fi Protected Setup™ (WPS)?

Option	Description
Yes	See *Related Information*: *Configure Your Wi-Fi Direct Network Using the One-Push Method of Wi-Fi Protected Setup™ (WPS)*.
No	See *Related Information*: *Configure Your Wi-Fi Direct Network Using the PIN Method of Wi-Fi Protected Setup™ (WPS)*.

To use Brother iPrint&Scan functionality in a Wi-Fi Direct network configured by one-push configuration using Wi-Fi Direct or by PIN Method configuration using Wi-Fi Direct, the device you use to configure Wi-Fi Direct must be running Android™ 4.0 or greater.

Related Information

- Configure Your Wi-Fi Direct Network

Related Topics:

- Configure Your Wi-Fi Direct Network Using the One-Push Method
- Configure Your Wi-Fi Direct Network Using the One-Push Method of Wi-Fi Protected Setup™ (WPS)
- Configure Your Wi-Fi Direct Network Using the PIN Method

- Configure Your Wi-Fi Direct Network Using the PIN Method of Wi-Fi Protected Setup™ (WPS)
- Configure Your Wi-Fi Direct Network Manually

Configure Your Wi-Fi Direct Network Using the One-Push Method

Related Models: HL-L3210CW/HL-L3230CDW/HL-L3270CDW

>> HL-L3210CW/HL-L3230CDW
>> HL-L3270CDW

HL-L3210CW/HL-L3230CDW

If your mobile device supports Wi-Fi Direct, follow these steps to configure a Wi-Fi Direct network:

1. Press ▲ or ▼ to select the [Network] option, and then press **OK**.
2. Press ▲ or ▼ to select the [Wi-Fi Direct] option, and then press **OK**.
3. Press ▲ or ▼ to select the [Push Button] option, and then press **OK**.
4. When [Wi-Fi Direct On?] appears, select On.
5. Activate Wi-Fi Direct on your mobile device (see your mobile device's user's guide for instructions) when [Activate Wi-Fi Direct on other device and press OK.] appears on the machine's LCD. Press **OK** on your machine.

   This will start the Wi-Fi Direct setup.
6. Do one of the following:
   - When your Brother machine is the Group Owner (G/O), connect your mobile device to the machine directly.
   - When your Brother machine is not the G/O, it will display available device names with which to configure a Wi-Fi Direct network. Press ▲ or ▼ to select the mobile device you want to connect to and press **OK**. To search for available devices again, select [<Rescan>], and then press **OK**.
7. If your mobile device connects successfully, the machine's LCD displays [Connected]. You have completed the Wi-Fi Direct network setup.

HL-L3270CDW

If your mobile device supports Wi-Fi Direct, follow these steps to configure a Wi-Fi Direct network:

When the machine receives the Wi-Fi Direct request from your mobile device, the message [Wi-Fi Direct connection request received. Press [OK] to connect.] will appear on the LCD. Press [OK] to connect.

1. Press [Settings] > [All Settings] > [Network] > [Wi-Fi Direct] > [Push Button].
2. Activate Wi-Fi Direct on your mobile device (see your mobile device's user's guide for instructions) when [Activate Wi-Fi Direct on other device. Then Press [OK].] appears on the machine's LCD. Press [OK] on your machine.

   This will start the Wi-Fi Direct setup. To cancel, press .
3. Do one of the following:
   - When your Brother machine is the Group Owner (G/O), connect your mobile device to the machine directly.
   - When your Brother machine is not the G/O, it displays available device names with which to configure a Wi-Fi Direct network. Select the mobile device you want to connect to. Search for available devices again by pressing [Rescan].
4. If your mobile device connects successfully, the machine's LCD displays [Connected]. You have completed the Wi-Fi Direct network setup.

Related Information

- Configure Your Wi-Fi Direct Network

Related Topics:

- Wi-Fi Direct Network Configuration Overview

Configure Your Wi-Fi Direct Network Using the One-Push Method of Wi-Fi Protected Setup™ (WPS)

Related Models: HL-L3210CW/HL-L3230CDW/HL-L3270CDW

>> HL-L3210CW/HL-L3230CDW
>> HL-L3270CDW

HL-L3210CW/HL-L3230CDW

If your mobile device supports WPS (PBC: Push Button Configuration), follow these steps to configure a Wi-Fi Direct network:

1. Press ▲ or ▼ to select the [Network] option, and then press **OK**.
2. Press ▲ or ▼ to select the [Wi-Fi Direct] option, and then press **OK**.
3. Press ▲ or ▼ to select the [Group Owner] option, and then press **OK**.
4. Press ▲ or ▼ to select the [On] option, and then press **OK**.
5. Press ▲ or ▼ to select the [Push Button] option, and then press **OK**.
6. When [Wi-Fi Direct On?] appears, select On.
7. Activate your mobile device's WPS one-push configuration method (see your mobile device's user's guide for instructions) when [Activate Wi-Fi Direct on other device and press OK.] appears on the machine's LCD. Press **OK** on your machine.

   This will start the Wi-Fi Direct setup.
8. If your mobile device connects successfully, the machine's LCD displays [Connected]. You have completed the Wi-Fi Direct network setup.

HL-L3270CDW

If your mobile device supports WPS (PBC: Push Button Configuration), follow these steps to configure a Wi-Fi Direct network:

When the machine receives the Wi-Fi Direct request from your mobile device, the message [Wi-Fi Direct connection request received. Press [OK] to connect.] will appear on the LCD. Press [OK] to connect.

1. Press [Settings] > [All Settings] > [Network] > [Wi-Fi Direct] > [Group Owner].
2. Press [On].
3. Press ▲ or ▼ to select the [Push Button] option. Press [Push Button].
4. Activate your mobile device's WPS one-push configuration method (see your mobile device's user's guide for instructions) when [Activate Wi-Fi Direct on other device. Then Press [OK].] appears on the machine's LCD. Press [OK] on your Brother machine.

   This will start the Wi-Fi Direct setup. To cancel, press .
5. If your mobile device connects successfully, the machine's LCD displays [Connected]. You have completed the Wi-Fi Direct network setup.

Related Information

- Configure Your Wi-Fi Direct Network

Related Topics:

- Wi-Fi Direct Network Configuration Overview

Configure Your Wi-Fi Direct Network Using the PIN Method

Related Models: HL-L3210CW/HL-L3230CDW/HL-L3270CDW

>> HL-L3210CW/HL-L3230CDW
>> HL-L3270CDW

HL-L3210CW/HL-L3230CDW

If your mobile device supports the PIN Method of Wi-Fi Direct, follow these steps to configure a Wi-Fi Direct network:

1. Press ▲ or ▼ to select the [Network] option, and then press **OK**.
2. Press ▲ or ▼ to select the [Wi-Fi Direct] option, and then press **OK**.
3. Press ▲ or ▼ to select the [PIN Code] option, and then press **OK**.
4. When [Wi-Fi Direct On?] appears, select On.
5. Activate Wi-Fi Direct on your mobile device (see your mobile device's user's guide for instructions) when [Activate Wi-Fi Direct on other device and press OK.] appears on the machine's LCD. Press **OK** on your machine.

   This will start the Wi-Fi Direct setup.
6. Do one of the following:
   - When your Brother machine is the Group Owner (G/O), it will wait for a connection request from your mobile device. When [Input PIN Code] appears, enter the PIN displayed on your mobile device in your Brother machine. Press **OK** to complete the setup.

     If the PIN is displayed on your Brother machine, enter the PIN in your mobile device.
   - When your Brother machine is not the G/O, it will display available device names with which to configure a Wi-Fi Direct network. Press ▲ or ▼ to select the mobile device you want to connect to and press **OK**. To search for available devices again, select [<Rescan>], and then press **OK**.
7. Do one of the following:
   - Select [Display] to display the PIN on your Brother machine, enter the PIN in your mobile device, and then go to the next step.
   - Select [Input] to enter the PIN displayed by your mobile device in your Brother machine. Press **OK**, and then go to the next step.

     If your mobile device does not display a PIN, press **Back** on your Brother machine. Go back to the first step and try again.
8. If your mobile device connects successfully, the machine's LCD displays [Connected]. You have completed the Wi-Fi Direct network setup.

HL-L3270CDW

If your mobile device supports the PIN Method of Wi-Fi Direct, follow these steps to configure a Wi-Fi Direct network:

When the machine receives the Wi-Fi Direct request from your mobile device, the message [Wi-Fi Direct connection request received. Press [OK] to connect.] will appear on the LCD. Press [OK] to connect.

1. Press [Settings] > [All Settings] > [Network] > [Wi-Fi Direct] > [PIN Code].

2. Activate Wi-Fi Direct on your mobile device (see your mobile device's user's guide for instructions) when `[Activate Wi-Fi Direct on other device. Then Press [OK].]` appears on the machine's LCD. Press `[OK]` on your machine.

   This will start the Wi-Fi Direct setup. To cancel, press ✕.

3. Do one of the following:
   - When your Brother machine is the Group Owner (G/O), it will wait for a connection request from your mobile device. When `[PIN Code]` appears, enter the PIN displayed on your mobile device in the machine. Press `[OK]` to complete the setup.

     If the PIN is displayed on your Brother machine, enter the PIN in your mobile device.
   - When your Brother machine is not the G/O, it displays available device names with which to configure a Wi-Fi Direct network. Select the mobile device you want to connect to. Search for available devices again by pressing `[Rescan]`.
4. Do one of the following:
   - Press `[Display PIN Code]` to display the PIN on your Brother machine and enter the PIN in your mobile device. Go to the next step.
   - Press `[Input PIN Code]` to enter the PIN displayed by your mobile device in the machine, and then press `[OK]`. Go to the next step.

     If your mobile device does not display a PIN, press ⌂ on your Brother machine. Go back to the first step and try again.
5. If your mobile device connects successfully, the machine's LCD displays `[Connected]`. You have completed the Wi-Fi Direct network setup.

Related Information

- Configure Your Wi-Fi Direct Network

Related Topics:

- Wi-Fi Direct Network Configuration Overview

Configure Your Wi-Fi Direct Network Using the PIN Method of Wi-Fi Protected Setup™ (WPS)

Related Models: HL-L3210CW/HL-L3230CDW/HL-L3270CDW

>> HL-L3210CW/HL-L3230CDW
>> HL-L3270CDW

HL-L3210CW/HL-L3230CDW

If your mobile device supports the PIN Method of Wi-Fi Protected Setup™ (WPS), follow these steps to configure a Wi-Fi Direct network:

1. Press ▲ or ▼ to select the `[Network]` option, and then press **OK**.
2. Press ▲ or ▼ to select the `[Wi-Fi Direct]` option, and then press **OK**.
3. Press ▲ or ▼ to select the `[Group Owner]` option, and then press **OK**.
4. Press ▲ or ▼ to select the `[On]` option, and then press **OK**.
5. Press ▲ or ▼ to select the `[PIN Code]` option, and then press **OK**.
6. When `[Wi-Fi Direct On?]` appears, select On.
7. Activate your mobile device's WPS PIN configuration method (see your mobile device's user's guide for instructions) when `[Activate Wi-Fi Direct on other device and press OK.]` appears on the machine's LCD. Press **OK** on your machine.

   This will start the Wi-Fi Direct setup.
8. The machine will wait for a connection request from your mobile device. When `[Input PIN Code]` appears, enter the PIN displayed on your mobile device in the machine.
9. Press **OK**.
10. If your mobile device connects successfully, the machine's LCD displays `[Connected]`. You have completed the Wi-Fi Direct network setup.

HL-L3270CDW

If your mobile device supports the PIN Method of Wi-Fi Protected Setup™ (WPS), follow these steps to configure a Wi-Fi Direct network:

When the machine receives the Wi-Fi Direct request from your mobile device, the message `[Wi-Fi Direct connection request received. Press [OK] to connect.]` will appear on the LCD. Press `[OK]` to connect.

1. Press `[Settings]` > `[All Settings]` > `[Network]` > `[Wi-Fi Direct]` > `[Group Owner]`.
2. Press `[On]`.
3. Press ▲ or ▼ to select the `[PIN Code]` option. Press `[PIN Code]`.
4. When `[Activate Wi-Fi Direct on other device. Then Press [OK].]` appears, activate your mobile device's WPS PIN configuration method (see your mobile device's user's guide for instructions) and then press `[OK]` on your Brother machine.

   This will start the Wi-Fi Direct setup. To cancel, press .
5. The machine will wait for a connection request from your mobile device. When `[PIN Code]` appears, enter the PIN displayed on your mobile device in to the machine. Press `[OK]`.

6. If your mobile device connects successfully, the machine's LCD displays `[Connected]`. You have completed the Wi-Fi Direct network setup.

Related Information

- Configure Your Wi-Fi Direct Network

Related Topics:

- Wi-Fi Direct Network Configuration Overview

Configure Your Wi-Fi Direct Network Manually

Related Models: HL-L3210CW/HL-L3230CDW/HL-L3270CDW

>> HL-L3210CW/HL-L3230CDW
>> HL-L3270CDW

HL-L3210CW/HL-L3230CDW

If your mobile device does not support Wi-Fi Direct or WPS, you must configure a Wi-Fi Direct network manually.

1. Press ▲ or ▼ to select the [Network] option, and then press **OK**.
2. Press ▲ or ▼ to select the [Wi-Fi Direct] option, and then press **OK**.
3. Press ▲ or ▼ to select the [Manual] option, and then press **OK**.
4. When [Wi-Fi Direct On?] appears, select On.
5. The machine will display the SSID name and Password. Go to your mobile device's wireless network settings screen, select the SSID name, and then enter the password.
6. If your mobile device connects successfully, the machine's LCD displays [Connected]. You have completed the Wi-Fi Direct network setup.

HL-L3270CDW

If your mobile device does not support Wi-Fi Direct or WPS, you must configure a Wi-Fi Direct network manually.

When the machine receives the Wi-Fi Direct request from your mobile device, the message [Wi-Fi Direct connection request received. Press [OK] to connect.] will appear on the LCD. Press [OK] to connect.

1. Press [Settings] > [All Settings] > [Network] > [Wi-Fi Direct] > [Manual].
2. The machine will display the SSID name and Password. Go to your mobile device's wireless network settings screen, select the SSID name, and then enter the password.
3. If your mobile device connects successfully, the machine's LCD displays [Connected]. You have completed the Wi-Fi Direct network setup.

Related Information

- Configure Your Wi-Fi Direct Network

Related Topics:

- Wi-Fi Direct Network Configuration Overview

Advanced Network Features

- Print the Network Configuration Report
- Print the WLAN Report
- Configure the SNTP Protocol Using Web Based Management

Print the Network Configuration Report

The Network Configuration Report lists the network configuration, including the network print server settings.

- Node Name: The Node Name appears on the current Network Configuration Report. The default Node Name is "BRNxxxxxxxxxxxx" for a wired network or "BRWxxxxxxxxxxxx" for a wireless network (where "xxxxxxxxxxxx" is your machine's MAC Address / Ethernet Address.)
- If the `[IP Address]` on the Network Configuration Report shows 0.0.0.0, wait for one minute and try printing it again.
- You can find your machine's settings, such as the IP address, subnet mask, node name, and MAC Address on the report, for example:
  - IP address: 192.168.0.5
  - Subnet mask: 255.255.255.0
  - Node name: BRN000ca0000499
  - MAC Address: 00-0c-a0-00-04-99

>> HL-L3210CW/HL-L3230CDN/HL-L3230CDW
>> HL-L3270CDW

HL-L3210CW/HL-L3230CDN/HL-L3230CDW

1. Press ▲ or ▼ to select the `[Print Reports]` option, and then press **OK**.
2. Press ▲ or ▼ to select `[Network Config]`.
3. Press **OK**.
4. Press **Go**.

HL-L3270CDW

1. Press `[Settings]` > `[All Settings]` > `[Print Reports]` > `[Network Configuration]`.
2. Press `[Yes]`.
   The machine prints the Network Configuration Report.
3. Press .

Related Information

- Advanced Network Features

Related Topics:

- Where Can I Find My Brother Machine's Network Settings?
- Use the Network Connection Repair Tool (Windows)
- Access Web Based Management
- I Want to Check that My Network Devices are Working Correctly

Print the WLAN Report

Related Models: HL-L3210CW/HL-L3230CDW/HL-L3270CDW

The WLAN Report reflects your machine's wireless status. If the wireless connection fails, check the error code on the printed report.

>> HL-L3210CW/HL-L3230CDW
>> HL-L3270CDW

HL-L3210CW/HL-L3230CDW

1. Press ▲ or ▼ to select the `[Print Reports]` option, and then press **OK**.
2. Press ▲ or ▼ to select the `[WLAN Report]` option, and then press **OK**.
3. Press **Go**.

   The machine will print the WLAN Report.

HL-L3270CDW

1. Press `[Settings]` > `[All Settings]` > `[Print Reports]` > `[WLAN Report]`.
2. Press `[Yes]`.

   The machine will print the WLAN Report.
3. Press .

If the WLAN Report does not print, check your machine for errors. If there are no visible errors, wait for one minute and then try to print the report again.

Related Information

- Advanced Network Features
  - Wireless LAN Report Error Codes

Related Topics:

- My Brother Machine Cannot Print over the Network
- I Want to Check that My Network Devices are Working Correctly

Wireless LAN Report Error Codes

Related Models: HL-L3210CW/HL-L3230CDW/HL-L3270CDW

If the Wireless LAN Report shows that the connection failed, check the error code on the printed report and see the corresponding instructions in the table:

Error Code	Problem and Recommended Solutions
TS-01	The wireless setting is not activated, change the wireless setting to ON. If a network cable is connected to your machine, disconnect it and change the wireless setting of your machine to ON.
TS-02	The wireless access point/router cannot be detected. 1. Check the following two points: • Unplug the power to your wireless access point/router, wait for 10 seconds, and then plug it back in. • If your WLAN access point/router is using MAC address filtering, confirm that the MAC address of the Brother machine is allowed in the filter. 2. If you manually entered the SSID and security information (SSID/authentication method/encryption method/Network Key), the information may be incorrect. Reconfirm the SSID and security information and re-enter the correct information as necessary. This device does not support a 5 GHz SSID/ESSID and you must select a 2.4 GHz SSID/ESSID. Make sure the access point/router is set to 2.4 GHz or 2.4 GHz/5 GHz mixed mode.
TS-03	The wireless network and security setting you entered may be incorrect. Reconfirm the wireless network settings. If you do not know this information, ask your network administrator.
TS-04	The Authentication/Encryption methods used by the selected wireless access point/router are not supported by your machine. Change the authentication and encryption method of the wireless access point/router. Your machine supports the following authentication methods: • WPA-Personal TKIP or AES • WPA2-Personal TKIP or AES • Open WEP or None (without encryption) • Shared key WEP If your problem is not solved, the SSID or network settings you entered may be incorrect. Confirm the wireless network settings.
TS-05	The security information (SSID/Network Key) is incorrect. Confirm the wireless security information (Authentication method/Encryption method/Network Key).
TS-06	The machine cannot detect a WLAN access point/router that has WPS enabled. Confirm the wireless security information (Authentication method/Encryption method/Network Key).

Error Code	Problem and Recommended Solutions
TS-07	The machine cannot detect a WLAN access point/router that has WPS enabled. If you want to connect with WPS, you must operate both your machine and the WLAN access point/router. Confirm the connection method for WPS on WLAN access point/router and try starting again. If you do not know how to operate your WLAN access point/router using WPS, see the documentation provided with your WLAN access point/router, ask the manufacturer of your WLAN access point/router or ask your network administrator.
TS-08	Two or more WLAN access points that have WPS enabled are detected. • Confirm that only one WLAN access point/router within range has the WPS method active and try again. • Try starting again after few minutes in order to avoid effects from other access points.

Related Information

- Print the WLAN Report

Related Topics:

- My Brother Machine Cannot Print over the Network
- I Want to Check that My Network Devices are Working Correctly
- Configure Your Machine for a Wireless Network Using the One Push Method of Wi-Fi Protected Setup™ (WPS)
- Configure Your Machine for a Wireless Network Using the PIN Method of Wi-Fi Protected Setup™ (WPS)
- Configure Your Machine for a Wireless Network Using the Machine's Control Panel Setup Wizard
- Configure Your Machine for a Wireless Network When the SSID Is Not Broadcast
- Configure Your Machine for an Enterprise Wireless Network

Configure the SNTP Protocol Using Web Based Management

Configure the SNTP protocol to synchronize the time the machine uses for authentication with the time kept by the SNTP time server.

1. Start your web browser.
2. Type "https://machine's IP address" in your browser's address bar (where "machine's IP address" is the machine's IP address).

   For example:

   https://192.168.1.2
3. If the machine prompts you for a password, type it, and then click .
4. Click the **Network** tab.
5. Click the **Protocol** menu in the left navigation bar.
6. Select the **SNTP** check box to activate the settings.
7. Click **Submit**.
8. Restart your Brother machine to activate the configuration.
9. Next to the SNTP check box, click **Advanced Settings**.
10. Select the profile you want to set up or change.

Option	Description
Status	Displays whether the SNTP protocol is enabled or disabled.
Synchronization Status	Confirm the latest synchronization status.
SNTP Server Method	Select **AUTO** or **STATIC**. • **AUTO** If you have a DHCP server in your network, the SNTP server will obtain the address from that server automatically. • **STATIC** Type the address you want to use.
Primary SNTP Server Address **Secondary SNTP Server Address**	Type the server address (up to 64 characters). The secondary SNTP server address is used as a backup to the primary SNTP server address. If the primary server is unavailable, the machine will contact the secondary SNTP server.
Primary SNTP Server Port **Secondary SNTP Server Port**	Type the port number (1-65535). The secondary SNTP server port is used as a backup to the primary SNTP server port. If the primary port is unavailable, the machine will contact the secondary SNTP port.
Synchronization Interval	Type the number of hours between server synchronization attempts (1-168 hours).

11. Click **Submit**.

Related Information

- Advanced Network Features

Technical Information for Advanced Users

- Reset the Network Settings to the Factory Settings

Reset the Network Settings to the Factory Settings

You can use your machine's control panel to reset the print server to its default factory settings. This resets all information, such as the password and IP address.

- This feature restores all wired (supported models only) and wireless network settings to the factory settings.
- You can also reset the print server to its factory settings using BRAdmin Light, BRAdmin Professional, or Web Based Management.

>> HL-L3210CW/HL-L3230CDN/HL-L3230CDW
>> HL-L3270CDW

HL-L3210CW/HL-L3230CDN/HL-L3230CDW

1. Press ▲ or ▼ to select the `[Network]` option, and then press **OK**.
2. Press ▲ or ▼ to select the `[Network Reset]` option, and then press **OK**.
3. Follow the machine's instruction to reset the network settings.

   The machine will restart.

HL-L3270CDW

1. Press `[Settings]` > `[All Settings]` > `[Network]` > `[Network Reset]`.
2. `[Reboot OK?]` will be displayed. Press `[Yes]` for two seconds to confirm.

   The machine will restart.

Related Information

- Technical Information for Advanced Users

Security

- Lock the Machine Settings
- Network Security Features

Lock the Machine Settings

Before turning on the machine's Access Lock, make a careful note of your password. If you forget the password, you must reset all passwords stored in the machine by contacting your administrator or Brother Customer Service.

- Setting Lock Overview

Setting Lock Overview

Use the Setting Lock feature to block unauthorized access to machine settings.
When Setting Lock is set to On, you cannot access the machine settings without entering the password.

- Set the Setting Lock Password
- Change the Setting Lock Password
- Turn On Setting Lock

Set the Setting Lock Password

>> HL-L3210CW/HL-L3230CDN/HL-L3230CDW
>> HL-L3270CDW

HL-L3210CW/HL-L3230CDN/HL-L3230CDW

1. Press ▲ or ▼ to display the [General Setup] option, and then press **OK**.
2. Press ▲ or ▼ to display the [Setting Lock] option, and then press **OK**.
3. Enter a four-digit number for the password.
   To enter each digit, press ▲ or ▼ to select a number, and then press **OK**.
4. When the LCD displays [Verify:], re-enter the new password.

HL-L3270CDW

1. Press [Settings] > [All Settings] > [General Setup] > [Setting Lock].
2. Enter a four-digit number for the password.
3. Press [OK].
4. When the LCD displays [Verify], re-enter the new password.
5. Press [OK].
6. Press .

Related Information

- Setting Lock Overview

Change the Setting Lock Password

>> HL-L3210CW/HL-L3230CDN/HL-L3230CDW
>> HL-L3270CDW

HL-L3210CW/HL-L3230CDN/HL-L3230CDW

1. Press ▲ or ▼ to display the [General Setup] option, and then press **OK**.
2. Press ▲ or ▼ to display the [Setting Lock] option, and then press **OK**.
3. Press ▲ or ▼ to select the [Set Password] option, and then press **OK**.
4. Enter the current four-digit password.
   To enter each digit, press ▲ or ▼ to select a number, and then press **OK**.
5. Enter a new four-digit password.
   To enter each digit, press ▲ or ▼ to select a number, and then press **OK**.
6. When the LCD displays [Verify:], re-enter the new password.

HL-L3270CDW

1. Press [Settings] > [All Settings] > [General Setup] > [Setting Lock] > [Set Password].
2. Enter the current four-digit password.
3. Press [OK].
4. Enter a new four-digit password.
5. Press [OK].
6. When the LCD displays [Verify], re-enter the new password.
7. Press [OK].
8. Press .

Related Information

- Setting Lock Overview

Turn On Setting Lock

>> HL-L3210CW/HL-L3230CDN/HL-L3230CDW
>> HL-L3270CDW

HL-L3210CW/HL-L3230CDN/HL-L3230CDW

1. Press ▲ or ▼ to display the [General Setup] option, and then press **OK**.
2. Press ▲ or ▼ to display the [Setting Lock] option, and then press **OK**.
3. Press **OK** when the LCD displays [On].
4. Enter the current four-digit password.
   To enter each digit, press ▲ or ▼ to select a number, and then press **OK**.

HL-L3270CDW

1. Press [Settings] > [All Settings] > [General Setup] > [Setting Lock] > [Lock Off⇒On].
2. Enter the current four-digit password.
3. Press [OK].

Related Information

- Setting Lock Overview

Network Security Features

- Before Using Network Security Features
- Secure Function Lock 3.0
- Manage Your Network Machine Securely Using SSL/TLS
- Send an Email Securely
- Use IEEE 802.1x Authentication for a Wired or a Wireless Network
- Store Print Log to Network

Before Using Network Security Features

Your Brother machine employs some of the latest network security and encryption protocols available today. These network features can be integrated into your overall network security plan to help protect your data and prevent unauthorized access to the machine.

We recommend disabling the Telnet, FTP server and TFTP protocols. Accessing the machine using these protocols is not secure.

Related Information

- Network Security Features

Secure Function Lock 3.0

Brother's Secure Function Lock 3.0 increases security by restricting the functions available on your Brother machine.

- Before Using Secure Function Lock 3.0
- Configure Secure Function Lock 3.0 Using Web Based Management
- Configure Public Mode for Secure Function Lock 3.0
- Additional Secure Function Lock 3.0 Features

Before Using Secure Function Lock 3.0

Use Secure Function Lock to configure passwords, set specific user page limits, and grant access to some or all of the functions listed here.

You can configure and change the following Secure Function Lock 3.0 settings using Web Based Management or BRAdmin Professional (Windows):

- **Print**

  Print includes print jobs sent via AirPrint, Google Cloud Print™ and Brother iPrint&Scan.

  If you register users' login names in advance, the users do not need to enter their passwords when they use the print function.
- **Color Print**
- **Web Connect** (supported models only)
- **Page Limits**
- **Page Counters**

Related Information

- Secure Function Lock 3.0

Configure Secure Function Lock 3.0 Using Web Based Management

1. Start your web browser.
2. Type "https://machine's IP address" in your browser's address bar (where "machine's IP address" is the machine's IP address).

   For example:

   https://192.168.1.2
3. If the machine prompts you for a password, type it, and then click .
4. Click the **Administrator** tab.
5. Click the **Restriction Management** or **User Restriction Function** menu in the left navigation bar.
6. Select **Secure Function Lock**.
7. Click **Submit**.
8. Click the **Restricted Functions** menu in the left navigation bar.
9. In the **User List / Restricted Functions** field, type a group name or user name.
10. In the **Print** and the other columns, select a check box to allow or clear a check box to restrict the function listed.
11. To configure the maximum page count, select the **On** check box in the **Page Limits** column, and then type the maximum number in the **Max. Pages** field.
12. Click **Submit**.
13. Click the **User List** menu in the left navigation bar.
14. In the **User List** field, type the user name.
15. In the **PIN Number** field, type a four-digit password.
16. Select **User List / Restricted Functions** from the drop-down list for each user.
17. Click **Submit**.

Related Information

- Secure Function Lock 3.0

Configure Public Mode for Secure Function Lock 3.0

Use the Secure Function Lock screen to set up Public Mode, which limits the functions available to public users. Public users will not need to enter a password to access the features made available through Public Mode settings.

Public Mode includes print jobs sent via Google Cloud Print™, Brother iPrint&Scan, and CUPS driver (Mac).

1. Start your web browser.
2. Type "https://machine's IP address" in your browser's address bar (where "machine's IP address" is the machine's IP address).

   For example:

   https://192.168.1.2
3. If the machine prompts you for a password, type it, and then click .
4. Click the **Administrator** tab.
5. Click the **Restriction Management** or **User Restriction Function** menu in the left navigation bar.
6. Select **Secure Function Lock**.
7. Click **Submit**.
8. Click the **Restricted Functions** menu in the left navigation bar.
9. In the **Public Mode** row, select a check box to allow or clear a check box to restrict the function listed.
10. Click **Submit**.

Related Information

- Secure Function Lock 3.0

Related Topics:

- Register Your Machine with Google Cloud Print Using Web Based Management

Additional Secure Function Lock 3.0 Features

Configure the following features in the Secure Function Lock screen:

All Counter Reset

Click **All Counter Reset**, in the **Page Counters** column, to reset the page counter.

Export to CSV file

Click **Export to CSV file**, to export the current page counter including **User List / Restricted Functions** information as a CSV file.

Last Counter Record

Click **Last Counter Record** if you want the machine to retain the page count after the counter has been reset.

Related Information

- Secure Function Lock 3.0

Manage Your Network Machine Securely Using SSL/TLS

- Introduction to SSL/TLS
- Certificates and Web Based Management
- Manage Your Network Machine Securely Using Web Based Management
- Manage Your Network Machine Securely Using BRAdmin Professional (Windows)
- Print Documents Securely Using SSL/TLS

Introduction to SSL/TLS

Secure Socket Layer (SSL) or Transport Layer Security (TLS) is an effective method of protecting data sent over a local or wide area network (LAN or WAN). It works by encrypting data, such as a print job, sent over a network, so anyone trying to capture it will not be able to read it.

SSL/TLS can be configured on both wired and wireless networks and will work with other forms of security such as WPA keys and firewalls.

Related Information

- Manage Your Network Machine Securely Using SSL/TLS
  - Brief History of SSL/TLS
  - Benefits of Using SSL/TLS

Brief History of SSL/TLS

SSL/TLS was originally created to secure web traffic information, particularly data sent between web browsers and servers. For example, when you use Internet Explorer for Internet Banking and you see https:// and the little padlock icon in the web browser, you are using SSL. SSL grew to work with additional applications, such as Telnet, printer, and FTP software, in order to become a universal solution for online security. Its original design intentions are still being used today by many online retailers and banks to secure sensitive data, such as credit card numbers, customer records, etc.

SSL/TLS uses extremely high levels of encryption and is trusted by banks all over the world.

Related Information

- Introduction to SSL/TLS

Benefits of Using SSL/TLS

The primary benefit of using SSL/TLS on Brother machines is to guarantee secure printing over an IP network by restricting unauthorized users from reading data sent to the machine. SSL's key selling point is that it can be used to print confidential data securely. For example, an HR department in a large company may be printing wage slips on a regular basis. Without encryption, the data contained on these wages slips can be read by other network users. However, with SSL/TLS, anyone trying to capture the data will see a confusing page of code and not the actual wage slip.

Related Information

- Introduction to SSL/TLS

Certificates and Web Based Management

You must configure a certificate to manage your networked Brother machine securely using SSL/TLS. You must use Web Based Management to configure a certificate.

- Supported Security Certificate Features
- Create and Install a Certificate
- Manage Multiple Certificates

Supported Security Certificate Features

Your Brother machine supports the use of multiple security certificates, which allows secure management, authentication, and communication with the machine. The following security certificate features can be used with the machine:

- SSL/TLS communication
- SSL communication for SMTP
- IEEE 802.1x authentication

The Brother machine supports the following:

- Pre-installed certificate

  Your machine has a pre-installed self-signed certificate. This certificate enables you to use SSL/TLS communication without creating or installing a different certificate.

  The pre-installed self-signed certificate protects your communication up to a certain level. We recommend using a certificate that is issued by a trusted organization for better security.

- Self-signed certificate

  This print server issues its own certificate. Using this certificate, you can easily use the SSL/TLS communication without creating or installing a different certificate from a CA.

- Certificate from a Certificate Authority (CA)

  There are two methods for installing a certificate from a CA. If you already have a certificate from a CA or if you want to use a certificate from an external trusted CA:

  - When using a Certificate Signing Request (CSR) from this print server.
  - When importing a certificate and a private key.

- Certificate Authority (CA) Certificate

  To use a CA certificate that identifies the CA and owns its private key, you must import that CA certificate from the CA before configuring the security features of the Network.

  - If you are going to use SSL/TLS communication, we recommend contacting your system administrator first.
  - When you reset the print server back to its default factory settings, the certificate and the private key that are installed will be deleted. If you want to keep the same certificate and the private key after resetting the print server, export them before resetting, and then reinstall them.

Related Information

- Certificates and Web Based Management

Create and Install a Certificate

- Step by Step Guide for Creating and Installing a Certificate
- Create and Install a Self-signed Certificate
- Create and Install a Certificate from a Certificate Authority (CA)
- Import and Export a CA Certificate

Step by Step Guide for Creating and Installing a Certificate

There are two options when choosing a security certificate: use a self-signed certificate or use a certificate from a Certificate Authority (CA).

These are a brief summary of the actions required, based on the option you choose.

Option 1

Self-Signed Certificate

1. Create a self-signed certificate using Web Based Management.
2. Install the self-signed certificate on your computer.

Option 2

Certificate from a CA

1. Create a Certificate Signing Request (CSR) using Web Based Management.
2. Install the certificate issued by the CA on your Brother machine using Web Based Management.
3. Install the certificate on your computer.

Related Information

- Create and Install a Certificate

Create and Install a Self-signed Certificate

- Create a Self-signed Certificate
- Install the Self-signed Certificate for Windows users with Administrator Rights
- Import and Export the Self-signed Certificate on your Brother Machine

Create a Self-signed Certificate

1. Start your web browser.
2. Type "https://machine's IP address" in your browser's address bar (where "machine's IP address" is the machine's IP address).

   For example:

   https://192.168.1.2

   - If you are using a Domain Name System or enable a NetBIOS name, you can type another name, such as "SharedPrinter" instead of the IP address.
     - For example:

       https://SharedPrinter

     If you enable a NetBIOS name, you can also use the node name.
     - For example:

       https://brnxxxxxxxxxxxx

     The NetBIOS name can be found in the Network Configuration Report.
   - For Mac, access Web Based Management by clicking the machine's icon on the **Status Monitor** screen.
3. If the machine prompts you for a password, type it, and then click .
4. Click the **Network** tab.
5. Click the **Security** tab.
6. Click the **Certificate** menu in the left navigation bar.
7. Click **Create Self-Signed Certificate**.
8. Enter a **Common Name** and a **Valid Date**.
   - The length of the **Common Name** is less than 64 bytes. Enter an identifier, such as an IP address, node name, or domain name to use when accessing this machine through SSL/TLS communication. The node name is displayed by default.
   - A warning will appear if you use the IPPS or HTTPS protocol and enter a different name in the URL than the **Common Name** that was used for the self-signed certificate.
9. Select your setting from the **Public Key Algorithm** drop-down list. The default setting is **RSA(2048bit)**.
10. Select your setting from the **Digest Algorithm** drop-down list. The default setting is **SHA256**.
11. Click **Submit**.
12. Click the **Network** tab.
13. Click the **Protocol** menu in the left navigation bar.
14. Click **HTTP Server Settings**.
15. Select the certificate you want to configure from the **Select the Certificate** drop-down list.
16. Click **Submit**.
17. Click **Yes** to restart your print server.

The self-signed certificate is created and saved in your machine's memory.

To use SSL/TLS communication, the self-signed certificate must be installed on your computer.

Related Information

- Create and Install a Self-signed Certificate

Install the Self-signed Certificate for Windows users with Administrator Rights

The following steps are for Microsoft Internet Explorer. If you use another web browser, consult the documentation for your web browser to get help with installing certificates.

1. Do one of the following:
   - (Windows 7 and Windows Server 2008)

     Click **(Start)** > **All Programs**.
   - (Windows 8)

     Right-click the (**Internet Explorer**) icon on the taskbar.
   - (Windows 10 and Windows Server 2016)

     Click > **Windows Accessories**.
   - (Windows Server 2012 and Windows Server 2012 R2)

     Click (**Internet Explorer**), and then right-click the (**Internet Explorer**) icon that appears on the taskbar.
2. Right-click **Internet Explorer**, and then click **Run as administrator**.

   If the **More** option appears, click **More**.

   If the **User Account Control** screen appears, click **Yes**.
3. Type "https://machine's IP address" in your browser's address bar to access your machine (where "machine's IP address" is the machine's IP address or the node name that you assigned for the certificate).
4. Click **Continue to this website (not recommended).**
5. Click **Certificate error**, and then click **View certificates**.

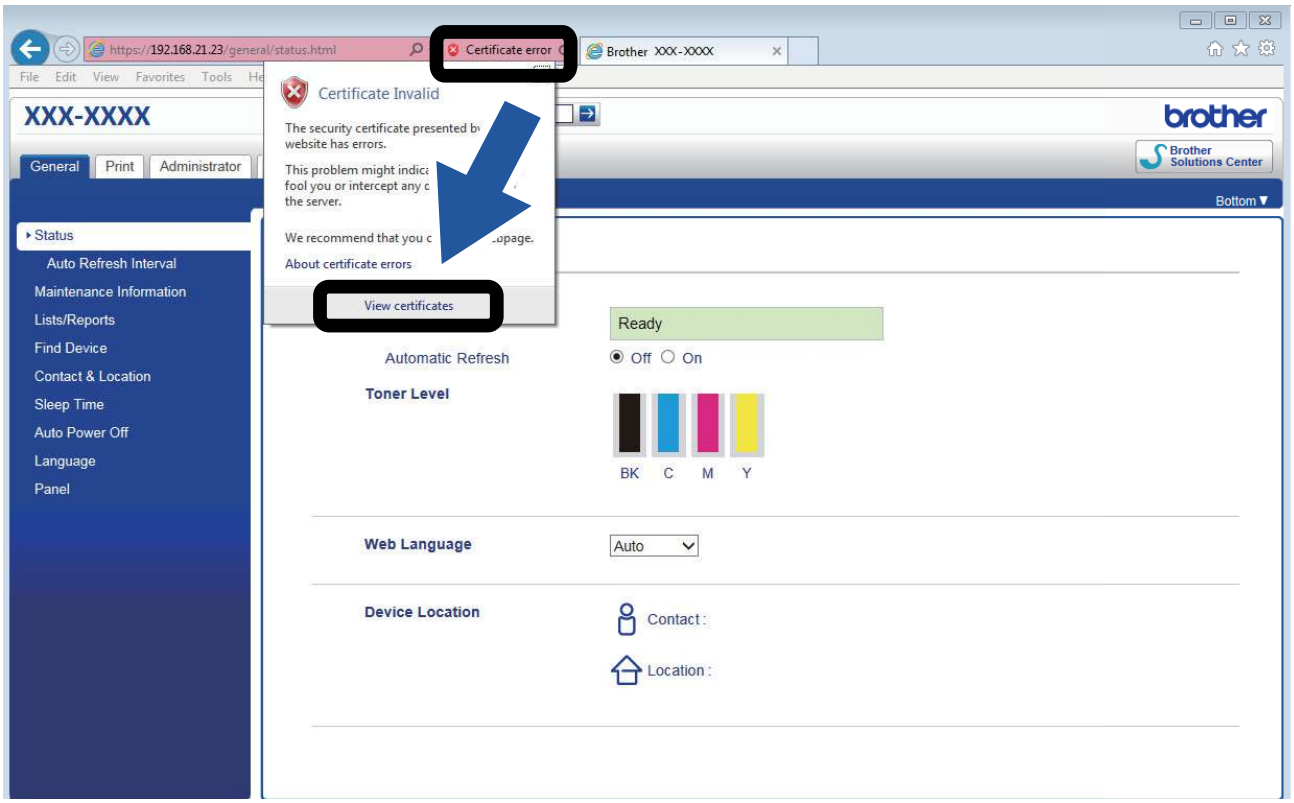

6. Click **Install Certificate…**.
7. When the **Certificate Import Wizard** appears, click **Next**.
8. Select **Place all certificates in the following store**, and then click **Browse…**.
9. Select **Trusted Root Certification Authorities**, and then click **OK**.
10. Click **Next**.
11. Click **Finish**.
12. Click **Yes**, if the fingerprint (thumbprint) is correct.
13. Click **OK**.

The self-signed certificate is now installed on your computer, and SSL/TLS communication is available.

Related Information

- Create and Install a Self-signed Certificate

Import and Export the Self-signed Certificate on your Brother Machine

You can store the self-signed certificates on your Brother machine and manage them by importing and exporting.

- Import the Self-signed Certificate
- Export the Self-signed Certificate

Import the Self-signed Certificate

1. Start your web browser.
2. Type "https://machine's IP address" in your browser's address bar (where "machine's IP address" is the machine's IP address).

   For example:

   https://192.168.1.2

- If you are using a Domain Name System or enable a NetBIOS name, you can type another name, such as "SharedPrinter" instead of the IP address.
  - For example:

    https://SharedPrinter

  If you enable a NetBIOS name, you can also use the node name.
  - For example:

    https://brnxxxxxxxxxxxx

  The NetBIOS name can be found in the Network Configuration Report.
- For Mac, access Web Based Management by clicking the machine's icon on the **Status Monitor** screen.

3. If the machine prompts you for a password, type it, and then click .
4. Click the **Network** tab.
5. Click the **Security** tab.
6. Click the **Certificate** menu in the left navigation bar.
7. Click **Import Certificate and Private Key**.
8. Browse to the file you want to import.
9. Type the password if the file is encrypted, and then click **Submit**.

The self-signed certificate is imported to your machine.

To use SSL/TLS communication, the self-signed certificate must also be installed on your computer. Contact your network administrator.

Related Information

- Import and Export the Self-signed Certificate on your Brother Machine

Export the Self-signed Certificate

1. Start your web browser.
2. Type "https://machine's IP address" in your browser's address bar (where "machine's IP address" is the machine's IP address).

   For example:

   https://192.168.1.2

- If you are using a Domain Name System or enable a NetBIOS name, you can type another name, such as "SharedPrinter" instead of the IP address.
  - For example:

    https://SharedPrinter

  If you enable a NetBIOS name, you can also use the node name.
  - For example:

    https://brnxxxxxxxxxxxx

  The NetBIOS name can be found in the Network Configuration Report.
- For Mac, access Web Based Management by clicking the machine's icon on the **Status Monitor** screen.

3. If the machine prompts you for a password, type it, and then click .
4. Click the **Network** tab.
5. Click the **Security** tab.
6. Click the **Certificate** menu in the left navigation bar.
7. Click **Export** shown with **Certificate List**.
8. If you want to encrypt the file, type a password in the **Enter password** field.

   If the **Enter password** field is blank, your output file will not be encrypted.
9. Type the password again in the **Retype password** field, and then click **Submit**.
10. Click **Save**.
11. Specify the location where you want to save the file.

The self-signed certificate is exported to your computer.

You can also import the self-signed certificate to your computer.

Related Information

- Import and Export the Self-signed Certificate on your Brother Machine

Create and Install a Certificate from a Certificate Authority (CA)

If you already have a certificate from an external trusted CA, you can store the certificate and private key on the machine and manage them by importing and exporting. If you do not have a certificate from an external trusted CA, create a Certificate Signing Request (CSR), send it to a CA for authentication, and install the returned certificate on your machine.

- Create a Certificate Signing Request (CSR)
- Install a Certificate on Your Brother Machine
- Import and Export the Certificate and Private Key

Create a Certificate Signing Request (CSR)

A Certificate Signing Request (CSR) is a request sent to a Certificate Authority (CA) to authenticate the credentials contained within the certificate.

We recommend installing a Root Certificate from the CA on your computer before creating the CSR.

1. Start your web browser.
2. Type "https://machine's IP address" in your browser's address bar (where "machine's IP address" is the machine's IP address).

   For example:

   https://192.168.1.2

   - If you are using a Domain Name System or enable a NetBIOS name, you can type another name, such as "SharedPrinter" instead of the IP address.
     - For example:

       https://SharedPrinter

     If you enable a NetBIOS name, you can also use the node name.
     - For example:

       https://brnxxxxxxxxxxxx

     The NetBIOS name can be found in the Network Configuration Report.
   - For Mac, access Web Based Management by clicking the machine's icon on the **Status Monitor** screen.

3. If the machine prompts you for a password, type it, and then click .
4. Click the **Network** tab.
5. Click the **Security** tab.
6. Click the **Certificate** menu in the left navigation bar.
7. Click **Create CSR**.
8. Type a **Common Name** (required) and add other information about your **Organization** (optional).

   - Your company details are required so that a CA can confirm your identity and verify it to the outside world.
   - The length of the **Common Name** must be less than 64 bytes. Enter an identifier, such as an IP address, node name, or domain name to use when accessing this printer through SSL/TLS communication. The node name is displayed by default. The **Common Name** is required.
   - A warning will appear if you type a different name in the URL than the Common Name that was used for the certificate.
   - The length of the **Organization**, the **Organization Unit**, the **City/Locality** and the **State/Province** must be less than 64 bytes.
   - The **Country/Region** should be a two character ISO 3166 country code.
   - If you are configuring an X.509v3 certificate extension, select the **Configure extended partition** check box, and then select **Auto (Register IPv4)** or **Manual**.

9. Select your setting from the **Public Key Algorithm** drop-down list. The default setting is **RSA(2048bit)**.
10. Select your setting from the **Digest Algorithm** drop-down list. The default setting is **SHA256**.
11. Click **Submit**.

    The CSR appears on your screen. Save the CSR as a file or copy and paste it into an online CSR form offered by a Certificate Authority.

12. Click **Save**.

- Follow your CA's policy regarding the method to send a CSR to your CA.
- If you are using the Enterprise root CA of Windows Server 2008/2012/2012 R2/2016, we recommend using the Web Server for the certificate template to securely create the Client Certificate. If you are creating a Client Certificate for an IEEE 802.1x environment with EAP-TLS authentication, we recommend using User for the certificate template. For more detailed information, go to your model's **FAQs & Troubleshooting** page on the Brother support website at support.brother.com. Search for "SSL".

Related Information

- Create and Install a Certificate from a Certificate Authority (CA)

Install a Certificate on Your Brother Machine

When you receive a certificate from a CA, follow the steps below to install it into the print server:

> Only a certificate issued with your machine's CSR can be installed onto the machine. When you want to create another CSR, make sure that the certificate is installed before creating another CSR. Create another CSR only after installing the certificate on the machine. If you do not, the CSR you create before installing will be invalid.

1. Start your web browser.
2. Type "https://machine's IP address" in your browser's address bar (where "machine's IP address" is the machine's IP address).

   For example:

   https://192.168.1.2

   - If you are using a Domain Name System or enable a NetBIOS name, you can type another name, such as "SharedPrinter" instead of the IP address.
     - For example:

       https://SharedPrinter

     If you enable a NetBIOS name, you can also use the node name.
     - For example:

       https://brnxxxxxxxxxxxx

     The NetBIOS name can be found in the Network Configuration Report.
   - For Mac, access Web Based Management by clicking the machine's icon on the **Status Monitor** screen.

3. If the machine prompts you for a password, type it, and then click .
4. Click the **Network** tab.
5. Click the **Security** tab.
6. Click the **Certificate** menu in the left navigation bar.
7. Click **Install Certificate**.
8. Browse to the file that contains the certificate issued by the CA, and then click **Submit**.

   The certificate has been created successfully and saved in your machine's memory successfully.

To use SSL/TLS communication, the Root Certificate from the CA must be installed on your computer. Contact your network administrator.

Related Information

- Create and Install a Certificate from a Certificate Authority (CA)

Import and Export the Certificate and Private Key

Store the certificate and private key on your machine and manage them by importing and exporting them.

- Import a Certificate and Private Key
- Export the Certificate and Private Key

Import a Certificate and Private Key

1. Start your web browser.
2. Type "https://machine's IP address" in your browser's address bar (where "machine's IP address" is the machine's IP address).

   For example:

   https://192.168.1.2

- If you are using a Domain Name System or enable a NetBIOS name, you can type another name, such as "SharedPrinter" instead of the IP address.
  - For example:

    https://SharedPrinter

  If you enable a NetBIOS name, you can also use the node name.
  - For example:

    https://brnxxxxxxxxxxxx

  The NetBIOS name can be found in the Network Configuration Report.
- For Mac, access Web Based Management by clicking the machine's icon on the **Status Monitor** screen.

3. If the machine prompts you for a password, type it, and then click .
4. Click the **Network** tab.
5. Click the **Security** tab.
6. Click the **Certificate** menu in the left navigation bar.
7. Click **Import Certificate and Private Key**.
8. Browse to the file you want to import.
9. Type the password if the file is encrypted, and then click **Submit**.

The certificate and private key are imported to your machine.

To use SSL/TLS communication, the Root Certificate from the CA must also be installed on your computer. Contact your network administrator.

Related Information

- Import and Export the Certificate and Private Key

Export the Certificate and Private Key

1. Start your web browser.
2. Type "https://machine's IP address" in your browser's address bar (where "machine's IP address" is the machine's IP address).

   For example:

   https://192.168.1.2

- If you are using a Domain Name System or enable a NetBIOS name, you can type another name, such as "SharedPrinter" instead of the IP address.
  - For example:

    https://SharedPrinter

  If you enable a NetBIOS name, you can also use the node name.
  - For example:

    https://brnxxxxxxxxxxxx

  The NetBIOS name can be found in the Network Configuration Report.
- For Mac, access Web Based Management by clicking the machine's icon on the **Status Monitor** screen.

3. If the machine prompts you for a password, type it, and then click .
4. Click the **Network** tab.
5. Click the **Security** tab.
6. Click the **Certificate** menu in the left navigation bar.
7. Click **Export** shown with **Certificate List**.
8. Enter the password if you want to encrypt the file.

   If a blank password is used, the output is not encrypted.
9. Enter the password again for confirmation, and then click **Submit**.
10. Click **Save**.
11. Specify the location where you want to save the file.

The certificate and private key are exported to your computer.

You can also import the certificate to your computer.

Related Information

- Import and Export the Certificate and Private Key

Import and Export a CA Certificate

You can import, export and store CA certificates on your Brother machine.

- Import a CA Certificate
- Export a CA Certificate

Import a CA Certificate

1. Start your web browser.
2. Type "https://machine's IP address" in your browser's address bar (where "machine's IP address" is the machine's IP address).

   For example:

   https://192.168.1.2

   - If you are using a Domain Name System or enable a NetBIOS name, you can type another name, such as "SharedPrinter" instead of the IP address.
     - For example:

       https://SharedPrinter

     If you enable a NetBIOS name, you can also use the node name.
     - For example:

       https://brnxxxxxxxxxxxx

     The NetBIOS name can be found in the Network Configuration Report.
   - For Mac, access Web Based Management by clicking the machine's icon on the **Status Monitor** screen.
3. If the machine prompts you for a password, type it, and then click .
4. Click the **Network** tab.
5. Click the **Security** tab.
6. Click **CA Certificate**.
7. Click **Import CA Certificate**.
8. Browse to the file you want to import.
9. Click **Submit**.

Related Information

- Import and Export a CA Certificate

Export a CA Certificate

1. Start your web browser.
2. Type "https://machine's IP address" in your browser's address bar (where "machine's IP address" is the machine's IP address).

   For example:

   https://192.168.1.2

   - If you are using a Domain Name System or enable a NetBIOS name, you can type another name, such as "SharedPrinter" instead of the IP address.
     - For example:

       https://SharedPrinter

     If you enable a NetBIOS name, you can also use the node name.
     - For example:

       https://brnxxxxxxxxxxxx

     The NetBIOS name can be found in the Network Configuration Report.
   - For Mac, access Web Based Management by clicking the machine's icon on the **Status Monitor** screen.
3. If the machine prompts you for a password, type it, and then click .
4. Click the **Network** tab.
5. Click the **Security** tab.
6. Click **CA Certificate**.
7. Select the certificate you want to export and click **Export**.
8. Click **Submit**.
9. Click **Save**.
10. Specify where on your computer you want to save the exported certificate, and save it.

Related Information

- Import and Export a CA Certificate

Manage Multiple Certificates

The multiple certificate feature allows you to use Web Based Management to manage each certificate installed on your machine. In Web Based Management, navigate to the **Certificate** or **CA Certificate** screen to view certificate content, delete, or export your certificates.

	Maximum Number of Certificates Stored UP on Brother Machine
Self-signed Certificate or Certificate Issued by a CA	3
CA Certificate	4

We recommend storing one less certificate than allowed, reserving an empty spot in case of certificate expiration. When a certificate expires, import a new certificate into the reserved spot, and then delete the expired certificate. This ensures that you avoid configuration failure.

- When you use HTTPS/IPPS, or IEEE 802.1x, you must select which certificate you are using.
- When you use SSL for SMTP communications, you do not have to choose the certificate. The necessary certificate will be chosen automatically.

Related Information

- Certificates and Web Based Management

Manage Your Network Machine Securely Using Web Based Management

To manage your network machine securely, you must use management utilities with security protocols.

We recommend using the HTTPS protocol for secure management. To use this protocol, HTTPS must be enabled on your machine.

- The HTTPS protocol is enabled by default.
- You can change the HTTPS protocol settings using the Web Based Management screen.

1. Start your web browser.
2. Type "https://Common Name" in your browser's address bar (where "Common Name" is the Common Name that you assigned to the certificate; this could be your IP address, node name, or domain name).
3. If the machine prompts you for a password, type it, and then click .
4. You can now access the machine using HTTPS.

- If you use the SNMPv3 protocol, follow the steps below.
- You can also change the SNMP settings by using BRAdmin Professional.

5. Click the **Network** tab.
6. Click **Protocol**.
7. Make sure the **SNMP** setting is enabled, and then click **Advanced Settings**.
8. Configure the SNMP settings.

   There are three options for **SNMP Mode of Operation**.

   - **SNMP v1/v2c read-write access**

     In this mode, the print server uses version 1 and version 2c of the SNMP protocol. You can use all Brother applications in this mode. However, it is not secure since it will not authenticate the user, and data will not be encrypted.
   - **SNMPv3 read-write access and v1/v2c read-only access**

     In this mode, the print server uses the read-write access of version 3 and the read-only access of version 1 and version 2c of the SNMP protocol.

When you use **SNMPv3 read-write access and v1/v2c read-only access** mode, some Brother applications (such as BRAdmin Light) that access the print server do not work correctly since they authorize the read-only access of version 1 and version 2c. If you want to use all applications, we recommend using **SNMP v1/v2c read-write access** mode.

   - **SNMPv3 read-write access**

     In this mode, the print server uses version 3 of the SNMP protocol. If you want to manage the print server securely, use this mode.

When you use **SNMPv3 read-write access** mode, note the following:

- You can use only BRAdmin Professional or Web Based Management to manage the print server.
- Except for BRAdmin Professional, all applications that use SNMPv1/v2c will be restricted. To allow the use of SNMPv1/v2c applications, use **SNMPv3 read-write access and v1/v2c read-only access** or **SNMP v1/v2c read-write access** mode.

9. Click **Submit**.

Related Information

- Manage Your Network Machine Securely Using SSL/TLS

Manage Your Network Machine Securely Using BRAdmin Professional (Windows)

To use BRAdmin Professional, you must:

- Use the latest version of BRAdmin Professional. Go to your model's **Downloads** page on the Brother Solutions Center at support.brother.com.
- Use Web Based Management with the HTTPS protocol if you use BRAdmin Professional and Web Based Management together.
- Use a different password in each group if you are managing a mixed group of older and newer print servers with BRAdmin Professional. This will ensure security is maintained on the newer print servers.

- "Older versions of BRAdmin" refer to BRAdmin Professional older than Ver. 2.80 and BRAdmin Light for Mac older than Ver.1.10.
- "Older print servers" refer to NC-2000 series, NC-2100p, NC-3100h, NC-3100s, NC-4100h, NC-5100h, NC-5200h, NC-6100h, NC-6200h, NC-6300h, NC-6400h, NC-8000, NC-100h, NC-110h, NC-120w, NC-130h, NC-140w, NC-8100h, NC-9100h, NC-7100w, NC-7200w and NC-2200w.

Related Information

- Manage Your Network Machine Securely Using SSL/TLS

Print Documents Securely Using SSL/TLS

To print documents securely with IPP protocol, use the IPPS protocol.

1. Start your web browser.
2. Type "https://machine's IP address" in your browser's address bar (where "machine's IP address" is the machine's IP address).

   For example:

   https://192.168.1.2

   - If you are using a Domain Name System or enable a NetBIOS name, you can type another name, such as "SharedPrinter" instead of the IP address.
     - For example:

       https://SharedPrinter

     If you enable a NetBIOS name, you can also use the node name.
     - For example:

       https://brnxxxxxxxxxxxx

     The NetBIOS name can be found in the Network Configuration Report.
   - For Mac, access Web Based Management by clicking the machine's icon on the **Status Monitor** screen.

3. If the machine prompts you for a password, type it, and then click .
4. Click the **Network** tab.
5. Click **Protocol**. Make sure the **IPP** check box is selected.

   If the **IPP** check box is not selected, select the **IPP** check box, and then click **Submit**.

   Restart your machine to activate the configuration.

   After the machine restarts, return to the machine's web page, click the **Network** tab, and then click **Protocol**.

6. Click **HTTP Server Settings**.
7. Select the **HTTPS(Port 443)** check box in the **IPP**, and then click **Submit**.
8. Restart your machine to activate the configuration.

Communication using IPPS cannot prevent unauthorized access to the print server.

Related Information

- Manage Your Network Machine Securely Using SSL/TLS

Send an Email Securely

- Configure Email Sending Using Web Based Management
- Send an Email with User Authentication
- Send an Email Securely Using SSL/TLS

Configure Email Sending Using Web Based Management

We recommend using Web Based Management to configure secured email sending with user authentication, or email sending using SSL/TLS.

1. Start your web browser.
2. Type "https://machine's IP address" in your browser's address bar (where "machine's IP address" is the machine's IP address).

   For example:

   https://192.168.1.2
3. If the machine prompts you for a password, type it, and then click .
4. Click the **Network** tab.
5. Click the **Protocol** menu in the left navigation bar.
6. In the **SMTP** field, click **Advanced Settings** and make sure the status of **SMTP** is **Enabled**.
7. Configure the **SMTP** settings.
   - Confirm that the email settings are correct after configuration by sending a test email.
   - If you do not know the SMTP server settings, contact your network administrator or Internet Service Provider (ISP).
8. When finished, click **Submit**.

   The **Test Send E-mail Configuration** dialog box appears.
9. Follow the instructions in the dialog box to test the current settings.

Related Information

- Send an Email Securely

Send an Email with User Authentication

Your Brother machine supports the SMTP-AUTH method to send email via an email server that requires user authentication. This method prevents unauthorized users from accessing the email server.

You can use the SMTP-AUTH method for email notification and email reports.

We recommend using Web Based Management to configure the SMTP authentication.

Email Server Settings

You must configure your machine's SMTP authentication method to match the method used by your email server. For details about your email server settings, contact your network administrator or Internet Service Provider (ISP).

To enable SMTP server authentication, in the Web Based Management **SMTP** screen, under **Server Authentication Method**, you must select **SMTP-AUTH**.

Related Information

- Send an Email Securely

Send an Email Securely Using SSL/TLS

Your Brother machine supports SSL/TLS communication methods. To use email server that is using SSL/TLS communication, you must configure following settings.

We recommend using Web Based Management to configure SSL/TLS.

Verify Server Certificate

Under **SSL/TLS**, if you choose **SSL** or **TLS**, the **Verify Server Certificate** check box will be selected automatically.

- Before you verify the server certificate, you must import the CA certificate issued by the CA that signed the server certificate. Contact your network administrator or your Internet Service Provider (ISP) to confirm if importing a CA certificate is necessary.
- If you do not need to verify the server certificate, clear the **Verify Server Certificate** check box.

Port Number

If you select **SSL**, or **TLS**, the **Port** value will be changed to match the protocol. To change the port number manually, type the port number after you select **SSL/TLS** settings.

You must configure your machine's communication method to match the method used by your email server. For details about your email server settings, contact your network administrator or your ISP.

In most cases, the secured webmail services require the following settings:

SMTP	**Port**	25
	Server Authentication Method	**SMTP-AUTH**
	SSL/TLS	**TLS**

Related Information

- Send an Email Securely

Use IEEE 802.1x Authentication for a Wired or a Wireless Network

- What Is IEEE 802.1x Authentication?
- Configure IEEE 802.1x Authentication for a Wired or a Wireless Network Using Web Based Management (Web Browser)
- IEEE 802.1x Authentication Methods

What Is IEEE 802.1x Authentication?

IEEE 802.1x is an IEEE standard for wired and wireless networks that limits access from unauthorized network devices. Your Brother machine (supplicant) sends an authentication request to a RADIUS server (Authentication server) through your access point or HUB. After your request has been verified by the RADIUS server, your machine can access the network.

Related Information

- Use IEEE 802.1x Authentication for a Wired or a Wireless Network

Configure IEEE 802.1x Authentication for a Wired or a Wireless Network Using Web Based Management (Web Browser)

- If you configure your machine using EAP-TLS authentication, you must install the client certificate issued by a CA before you start configuration. Contact your network administrator about the client certificate. If you have installed more than one certificate, we recommend writing down the certificate name you want to use.
- Before you verify the server certificate, you must import the CA certificate that has been issued by the CA that signed the server certificate. Contact your network administrator or your Internet Service Provider (ISP) to confirm whether a CA certificate import is necessary.

You can also configure IEEE 802.1x authentication using:

- BRAdmin Professional (Wired and wireless network)
- Wireless setup wizard from the control panel (Wireless network)
- Wireless setup wizard on the installation disc (Wireless network)

1. Start your web browser.
2. Type "https://machine's IP address" in your browser's address bar (where "machine's IP address" is the machine's IP address).

   For example:

   https://192.168.1.2

   - If you are using a Domain Name System or enable a NetBIOS name, you can type another name, such as "SharedPrinter" instead of the IP address.
     - For example:

       https://SharedPrinter

     If you enable a NetBIOS name, you can also use the node name.
     - For example:

       https://brnxxxxxxxxxxxx

     The NetBIOS name can be found in the Network Configuration Report.
   - For Mac, access Web Based Management by clicking the machine's icon on the **Status Monitor** screen.
3. If the machine prompts you for a password, type it, and then click .
4. Click the **Network** tab.
5. Do one of the following:

Option	Description
Wired network	Click the **Wired** tab, and then select **Wired 802.1x Authentication** in the left navigation bar.
Wireless network	Click the **Wireless** tab, and then select **Wireless (Enterprise)** in the left navigation bar.

6. Configure the IEEE 802.1x authentication settings.

- To enable IEEE 802.1x authentication for wired networks, select **Enabled** for **Wired 802.1x status** on the **Wired 802.1x Authentication** page.
- If you are using **EAP-TLS** authentication, you must select the client certificate that has been installed (shown with certificate name) for verification from the **Client Certificate** drop-down list.
- If you select **EAP-FAST**, **PEAP**, **EAP-TTLS**, or **EAP-TLS** authentication, select the verification method from the **Server Certificate Verification** drop-down list. Verify the server certificate using the CA certificate, imported to the machine in advance, that has been issued by the CA that signed the server certificate.

Select one of the following verification methods from the **Server Certificate Verification** drop-down list:

Option	Description
No Verification	The server certificate can always be trusted. The verification is not performed.
CA Cert.	The verification method to check the CA reliability of the server certificate, using the CA certificate that has been issued by the CA that signed the server certificate.
CA Cert. + ServerID	The verification method to check the common name [1] value of the server certificate, in addition to the CA reliability of the server certificate.

7. When finished with configuration, click **Submit**.

   For wired networks: After configuring, connect your machine to the IEEE 802.1x supported network. After a few minutes, print the Network Configuration Report to check the <**Wired IEEE 802.1x**> Status.

Option	Description
Success	The wired IEEE 802.1x function is enabled and the authentication was successful.
Failed	The wired IEEE 802.1x function is enabled; however, the authentication failed.
Off	The wired IEEE 802.1x function is not available.

Related Information

- Use IEEE 802.1x Authentication for a Wired or a Wireless Network

1 The common name verification compares the common name of the server certificate to the character string configured for the **Server ID**. Before you use this method, contact your system administrator about the server certificate's common name and then configure **Server ID**.

IEEE 802.1x Authentication Methods

LEAP (Wireless network)

Lightweight Extensible Authentication Protocol (LEAP) is a proprietary EAP method developed by Cisco Systems, Inc., which uses a user ID and password for authentication.

EAP-FAST

Extensible Authentication Protocol-Flexible Authentication via Secured Tunneling (EAP-FAST) has been developed by Cisco Systems, Inc., which uses a user ID and password for authentication, and symmetric key algorithms to achieve a tunneled authentication process.

The Brother machine supports the following inner authentication methods:

- EAP-FAST/NONE
- EAP-FAST/MS-CHAPv2
- EAP-FAST/GTC

EAP-MD5 (Wired network)

Extensible Authentication Protocol-Message Digest Algorithm 5 (EAP-MD5) uses a user ID and password for challenge-response authentication.

PEAP

Protected Extensible Authentication Protocol (PEAP) is a version of EAP method developed by Cisco Systems, Inc., Microsoft Corporation and RSA Security. PEAP creates an encrypted Secure Sockets Layer (SSL)/Transport Layer Security (TLS) tunnel between a client and an authentication server, for sending a user ID and password. PEAP provides mutual authentication between the server and the client.

The Brother machine supports the following inner authentications:

- PEAP/MS-CHAPv2
- PEAP/GTC

EAP-TTLS

Extensible Authentication Protocol-Tunneled Transport Layer Security (EAP-TTLS) has been developed by Funk Software and Certicom. EAP-TTLS creates a similar encrypted SSL tunnel to PEAP, between a client and an authentication server, for sending a user ID and password. EAP-TTLS provides mutual authentication between the server and the client.

The Brother machine supports the following inner authentications:

- EAP-TTLS/CHAP
- EAP-TTLS/MS-CHAP
- EAP-TTLS/MS-CHAPv2
- EAP-TTLS/PAP

EAP-TLS

Extensible Authentication Protocol-Transport Layer Security (EAP-TLS) requires digital certificate authentication both at a client and an authentication server.

Related Information

- Use IEEE 802.1x Authentication for a Wired or a Wireless Network

Store Print Log to Network

- Store Log to Network Overview
- Configure the Store Print Log to Network Settings Using Web Based Management
- Use the Store Print Log to Network's Error Detection Setting

Store Log to Network Overview

The Store Print Log to Network feature allows you to save the print log file from your Brother machine to a network server using the Common Internet File System (CIFS) protocol. You can record the ID, type of print job, job name, user name, date, time and the number of printed pages for every print job. CIFS is a protocol that runs over TCP/IP, allowing computers on a network to share files over an intranet or the Internet.

The following print functions are recorded in the print log:

- Print jobs from your computer
- Web Connect Print (supported models only)

- The Store Print Log to Network feature supports Kerberos authentication and NTLMv2 authentication. You must configure the SNTP protocol (network time server) for Authentication.
- You can set the file type to TXT or CSV when storing a file to the server.

Related Information

- Store Print Log to Network

Configure the Store Print Log to Network Settings Using Web Based Management

1. Start your web browser.
2. Type "https://machine's IP address" in your browser's address bar (where "machine's IP address" is the machine's IP address).

   For example:

   https://192.168.1.2
3. If the machine prompts you for a password, type it, and then click .
4. Click the **Administrator** tab.
5. Click the **Store Print Log to Network** menu.
6. In the **Print Log** field, click **On**.
7. Configure the following settings:

Option	Description
Network Folder Path	Type the destination folder where your log will be stored on the CIFS server (i.e., \\ComputerName\SharedFolder).
File Name	Type the file name you want to use for the print log (up to 32 characters).
File Type	Select the **TXT** or **CSV** option for the Print Log file type.
Auth. Method	Select the authentication method required for access to the CIFS server: **Auto**, **Kerberos**, or **NTLMv2**. Kerberos is an authentication protocol which allows devices or individuals to securely prove their identity to network servers using a single sign-on. NTLMv2 is the authentication method used by Windows to log into servers. • **Auto**: If you select **Auto**, NTLMv2 will be used to the authentication method. • **Kerberos**: Select the **Kerberos** option to use Kerberos authentication only. • **NTLMv2**: Select the **NTLMv2** option to use NTLMv2 authentication only. • For the **Kerberos** and **NTLMv2** authentication, you must also configure the SNTP protocol (network time server) and DNS server.
Username	Type the user name for the authentication (up to 96 characters). If the user name is part of a domain, enter the user name in one of the following styles: user@domain or domain\user.
Password	Type the password for the authentication (up to 32 characters).
Kerberos Server Address (if needed)	Type the KDC host address (for example: kerberos.example.com; up to 64 characters) or the IP address (for example: 192.168.56.189).
Error Detection Setting	Choose what action should be taken when the Print Log cannot be stored to the server due to a network error.

8. In the **Connection Status** field, confirm the last log status.

   You can also confirm the error status on the LCD of your machine.
9. Click **Submit** to display the **Test Print Log to Network** page.

To test your settings, click **Yes** and then go to the next step.

To skip the test, click **No**. Your settings will be submitted automatically.

10. The machine will test your settings.
11. If your settings are accepted, **Test OK** appears on the screen.

    If **Test Error** appears, check all settings, and then click **Submit** to display the Test page again.

Related Information

- Store Print Log to Network

Use the Store Print Log to Network's Error Detection Setting

Use Error Detection Settings to determine the action that is taken when the print log cannot be stored to the server due to a network error.

1. Start your web browser.
2. Type "https://machine's IP address" in your browser's address bar (where "machine's IP address" is the machine's IP address).

   For example:

   https://192.168.1.2
3. If the machine prompts you for a password, type it, and then click .
4. Click the **Administrator** tab.
5. Click the **Store Print Log to Network** menu in the left navigation bar.
6. In the **Error Detection Setting** section, select the **Cancel Print** or **Ignore Log & Print** option.

Option	Description
Cancel Print	If you select the **Cancel Print** option, the print jobs are canceled when the print log cannot be stored to the server.

Ignore Log & Print	If you select the **Ignore Log & Print** option, the machine prints the documentation even if the print log cannot be stored to the server.
	When the store print log function has recovered, the print log is recorded as follows:
	`Id, Type, Job Name, User Name, Date, Time, Print Pages, Color Pages`
	`1, Print(xxxxxxx), "Document01.doc", "user01", 03/03/20xx, 14:01:32, 52, 21`
	`2, Print(xxxxxxx), "Document02.doc", "user01", 03/03/20xx, 14:45:30, ?, ?` — a
	`3, <Error>, ?, ?, ?, ?, ?, ?` — b
	`4, Print(xxxxxxx), "Report01.xls", "user02", 03/03/20xx, 19:30:40, 4, 4`
	a. If the log cannot be stored at the end of printing, the print log except the number of printed pages will be recorded.
	b. If the print log cannot be stored at the beginning and the end of printing, the print log of the job will not be recorded. When the function has recovered, the error is reflected in the log.

7. Click **Submit** to display the **Test Print Log to Network** page.

   To test your settings, click **Yes** and then go to the next step.

   To skip the test, click **No**. Your settings will be submitted automatically.
8. The machine will test your settings.
9. If your settings are accepted, **Test OK** appears on the screen.

   If **Test Error** appears, check all settings, and then click **Submit** to display the Test page again.

Related Information

- Store Print Log to Network

Mobile/Web Connect

- Brother Web Connect
- Google Cloud Print
- AirPrint
- Mobile Printing for Windows
- Mopria® Print Service
- Brother iPrint&Scan for Mobile Devices
- Near-Field Communication (NFC)

Brother Web Connect

Related Models: HL-L3270CDW

- Brother Web Connect Overview
- Online Services Used with Brother Web Connect
- Conditions for Using Brother Web Connect
- Set Up Brother Web Connect
- Download and Print Documents Using Brother Web Connect

Brother Web Connect Overview

Related Models: HL-L3270CDW

Certain websites provide services that allow users to upload and view images and files on the websites. Your Brother machine can download and print images that are already uploaded to these services.

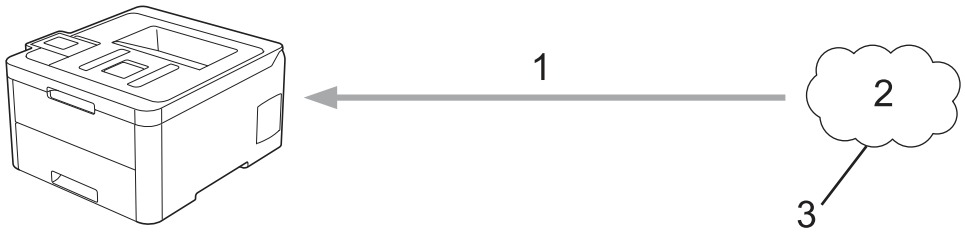

1. Printing
2. Photos, images, documents and other files
3. Web Service

To use Brother Web Connect, your Brother machine must be connected to a network that has access to the Internet, through either a wired or wireless connection.

For network setups that use a proxy server, the machine must also be configured to use a proxy server. If you are unsure of your network configuration, check with your network administrator.

A proxy server is a computer that serves as an intermediary between computers without a direct Internet connection, and the Internet.

Related Information

- Brother Web Connect

Online Services Used with Brother Web Connect

Related Models: HL-L3270CDW

Use Brother Web Connect to access services from your Brother machine:

To use Brother Web Connect, you must have an account with the online service you want to use. If you do not already have an account, use a computer to access the service's website and create an account.

If you already have an account, there is no need to create an additional account.

Google Drive™

An online document storage, editing, sharing and file synchronization service.

URL: drive.google.com

Evernote®

An online file storage and management service.

URL: www.evernote.com

Dropbox

An online file storage, sharing and synchronization service.

URL: www.dropbox.com

OneDrive

An online file storage, sharing and managing service.

URL: onedrive.live.com

Box

An online document editing and sharing service.

URL: www.box.com

OneNote

An online document editing and sharing service.

URL: www.onenote.com

For more information about any of these services, refer to the respective service's website.

The following table describes which file types can be used with each Brother Web Connect feature:

Accessible Services	Google Drive™ Evernote® Dropbox OneDrive Box OneNote
Download and print images	JPEG PDF DOCX XLSX PPTX [1]

1 DOC/XLS/PPT formats are also available for downloading and printing images.

(For Hong Kong, Taiwan and Korea)

Brother Web Connect supports only file names written in English. Files named in the local language will not be downloaded.

Related Information

- Brother Web Connect

Conditions for Using Brother Web Connect

Related Models: HL-L3270CDW

- Brother Software Installation for Using Brother Web Connect
- Configure the Proxy Server Settings Using Your Brother Machine's Control Panel
- Configure the Proxy Server Settings Using Web Based Management

Brother Software Installation for Using Brother Web Connect

Related Models: HL-L3270CDW

The initial installation of Brother Web Connect requires a computer that has access to the Internet and has the Brother machine's software installed.

Windows

To install the Brother software and connect your machine to a wireless or wired network, see the *Quick Setup Guide*.

Mac

To install the **Full Driver & Software Package**, go to your model's **Downloads** page on the Brother Solutions Center at support.brother.com.

Related Information

- Conditions for Using Brother Web Connect

Configure the Proxy Server Settings Using Your Brother Machine's Control Panel

Related Models: HL-L3270CDW

If your network uses a proxy server, the following proxy server information must be configured on the machine:

- Proxy server address
- Port number
- User Name
- Password

1. Press [Settings] > [All Settings] > [Network] > [Web Connect Settings] > [Proxy Settings] > [Proxy Connection] > [On].
2. Press the proxy server information, and then enter the option that you want to set.
3. Press .

Related Information

- Conditions for Using Brother Web Connect

Configure the Proxy Server Settings Using Web Based Management

Related Models: HL-L3270CDW

If your network uses a proxy server, the following proxy server information must be configured using Web Based Management:

- Proxy server address
- Port number
- User Name
- Password

We recommend Microsoft Internet Explorer 11/Microsoft Edge for Windows and Safari 10/11 for Mac. Make sure that JavaScript and Cookies are always enabled in whichever browser you use.

1. Start your web browser.
2. Type "https://machine's IP address" in your browser's address bar (where "machine's IP address" is the machine's IP address).

   For example:

   https://192.168.1.2
3. If the machine prompts you for a password, type it, and then click .
4. Click the **Network** tab.
5. Click the **Protocol** menu in the left navigation bar.
6. Make sure the **Proxy** check box is selected, and then click **Submit**.
7. In the **Proxy** field, click **Advanced Settings**.
8. Enter the proxy server information.
9. Click **Submit**.

Related Information

- Conditions for Using Brother Web Connect

Set Up Brother Web Connect

Related Models: HL-L3270CDW

- Brother Web Connect Setup Overview
- Create an Account for Each Online Service Before Using Brother Web Connect
- Apply for Brother Web Connect Access
- Register an Account on Your Brother Machine for Brother Web Connect

Brother Web Connect Setup Overview

Related Models: HL-L3270CDW

Configure the Brother Web Connect settings using the following procedure:

Step 1: Create an account with the service you want to use.

Access the service's website using a computer and create an account. (If you already have an account, there is no need to create an additional account.)

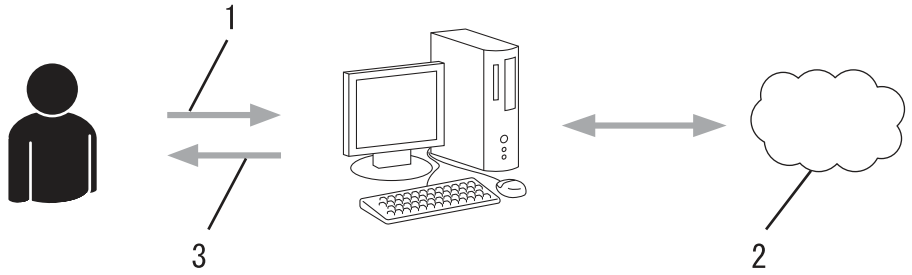

1. User registration
2. Web Service
3. Obtain account

Step 2: Apply for Brother Web Connect access.

Start Brother Web Connect access using a computer and obtain a temporary ID.

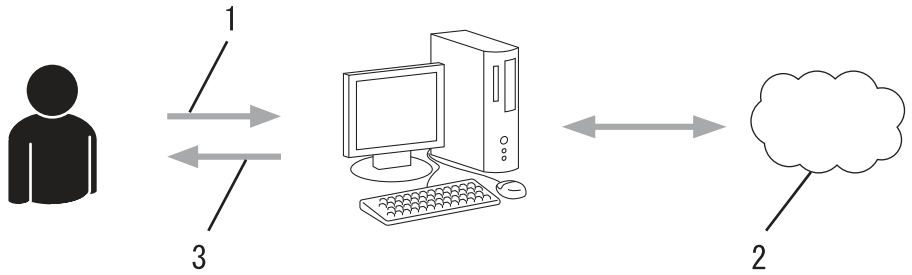

1. Enter account information
2. Brother Web Connect application page
3. Obtain temporary ID

Step 3: Register your account information on your machine so you can access the service you want to use.

Enter the temporary ID to enable the service on your machine. Specify the account name as you would like it to be displayed on the machine, and enter a PIN if you would like to use one.

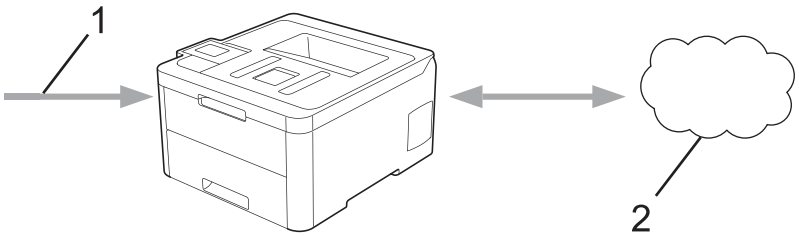

1. Enter temporary ID
2. Web Service

Your Brother machine can now use the service.

Related Information

- Set Up Brother Web Connect

Create an Account for Each Online Service Before Using Brother Web Connect

Related Models: HL-L3270CDW

To use Brother Web Connect to access an online service, you must have an account with that online service. If you do not already have an account, use a computer to access the service's website and create an account. After creating an account, log on and use the account once with a computer before using the Brother Web Connect feature. Otherwise, you may not be able to access the service using Brother Web Connect.

If you already have an account, there is no need to create an additional account.

After you finish creating an account with the online service you want to use, apply for Brother Web Connect access.

You do not need to create an account if you use the service as a guest. You can use only certain services as a guest. If the service you want to use does not have a guest-user option, you must create an account.

Related Information

- Set Up Brother Web Connect

Apply for Brother Web Connect Access

Related Models: HL-L3270CDW

To use Brother Web Connect to access online services, you must first apply for Brother Web Connect access using a computer that has the Brother Software installed.

1. Access the Brother Web Connect application website:

Option	Description
Windows 7	Click **(Start)** > **All Programs** > **Brother** > **Brother Utilities**, and then click the drop-down list and select your model name (if not already selected). Click **Do More** in the left navigation bar, and then click **Brother Web Connect**.
Windows 8 Windows 10	Launch (**Brother Utilities**), and then click the drop-down list and select your model name (if not already selected). Click **Do More** in the left navigation bar, and then click **Brother Web Connect**.
Windows 8.1	Move your mouse to the lower left corner of the **Start** screen and click (if you are using a touch-based device, swipe up from the bottom of the **Start** screen to bring up the **Apps** screen). Click (**Brother Utilities**), and then click the drop-down list and select your model name (if not already selected). Click **Do More** in the left navigation bar, and then click **Brother Web Connect**.
Mac	Click **Go** in the **Finder** bar, **Applications** > **Brother** > **Utilities** > **Brother Web Connect**.

You can also access the website directly:
Type bwc.brother.com into your web browser's address bar.

The Brother Web Connect page launches.

2. Select the service you want to use.

The actual screen may differ from the screen shown above.

3. Follow the on-screen instructions and apply for access.
When finished, your temporary ID will appear.

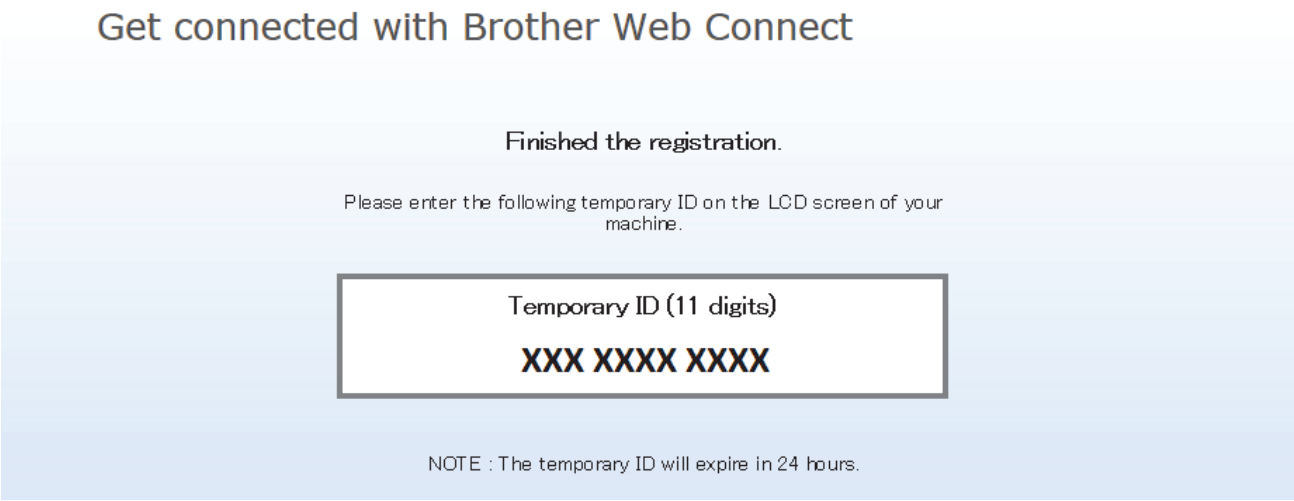

4. Make a note of your temporary ID, as you will need it to register accounts to the machine. The temporary ID is valid for 24 hours.
5. Close the web browser.

Now that you have a Brother Web Connect access ID, you must register this ID on your machine, and then use your machine to access the web service you want to use.

Related Information

- Set Up Brother Web Connect

Related Topics:

- Register an Account on Your Brother Machine for Brother Web Connect

Register an Account on Your Brother Machine for Brother Web Connect

Related Models: HL-L3270CDW

You must enter your Brother Web Connect account information and configure your machine so that it can use Brother Web Connect to access the service you want.

- You must apply for Brother Web Connect access to register an account on your machine.
- Before you register an account, confirm that the correct date and time are set on the machine.

1. Press [Functions] > [Web].

   - If information regarding the Internet connection appears on the machine's LCD, read the information and press [OK]. If you want to display this information again, press [Yes].
   - Occasionally, updates or announcements about Brother Web Connect's features will appear on the LCD. Read the information, and then press [OK].

2. If the information regarding license agreement appears, make your selection and follow the on-screen instructions.
3. Press ▲ or ▼ to display the service with which you want to register.
4. Press the service name.
5. If information regarding Brother Web Connect appears, press [OK].
6. Press [Register/Delete].
7. Press [Register Account].

   The machine will prompt you to enter the temporary ID you received when you applied for Brother Web Connect access.
8. Press [OK].
9. Enter the temporary ID using the LCD.
10. Press [OK].

    The machine will prompt you to enter the account name that you want to be displayed on the LCD.
11. Press [OK].
12. Enter the name using the LCD.
13. Press [OK].
14. Do one of the following:
    - To set a PIN for the account, press [Yes]. (A PIN prevents unauthorized access to the account.) Enter a four-digit number, and then press [OK].
    - If you do not want to set a PIN, press [No].
15. When the account information you entered appears, confirm that it is correct.
16. Press [Yes] to register your information as entered.

    An error message will appear on the LCD if the information you entered does not match the temporary ID you received when you applied for access, or if the temporary ID has expired. Enter the temporary ID correctly, or apply for access again to receive a new temporary ID.

17. Press [OK].
18. Press .

Registration is complete and your machine can now access the service.

Related Information

- Set Up Brother Web Connect

Related Topics:

- Apply for Brother Web Connect Access

Download and Print Documents Using Brother Web Connect

Related Models: HL-L3270CDW

Documents that have been uploaded to your account can be downloaded directly to your machine and printed. Documents that other users have uploaded to their own accounts for sharing can also be downloaded to your machine and printed, as long as you have viewing privileges for those documents. Certain services allow guest users to view documents that are public. When accessing a service or an account as a guest user, you can view documents that the owner has made public, that is, documents with no viewing restrictions.

To download other users' documents, you must have access privileges to view the corresponding albums or documents.

If you are a restricted user for Web Connect due to the Secure Function Lock feature (available for certain models), you cannot download the data.

The Secure Function Lock Page Limit feature applies to the print job using Web Connect.

For Hong Kong, Taiwan and Korea

Brother Web Connect supports only file names written in English. Files named in the local language will not be downloaded.

Related Information

- Brother Web Connect
  - Download and Print Using Web Services

Download and Print Using Web Services

Related Models: HL-L3270CDW

1. Press [Functions] > [Web].

- If information regarding the Internet connection appears on the machine's LCD, read the information and press [OK]. If you want to display this information again, press [Yes].
- Occasionally, updates or announcements about Brother Web Connect's features will appear on the LCD. Read the information, and then press [OK].

2. Press ▲ or ▼ to display the service that hosts the document you want to download and print. Press the service name.
3. To log on to the service, press ▲ or ▼ to display your account name, and then press it. If the PIN entry screen appears, enter the four-digit PIN and press [OK].
4. Press ▲ or ▼ to display the folder you want, and then press it. Some services do not require documents to be saved in folders. For documents not saved in folders, select [See Unsorted Files] to select documents. Other users' documents cannot be downloaded if they are not saved in a folder.
5. Select the documents you want to print.
6. When finished, press [OK].
7. Follow the on-screen instructions to complete this operation.

Related Information

- Download and Print Documents Using Brother Web Connect

Google Cloud Print

- Google Cloud Print Overview
- Before Using Google Cloud Print
- Print from Google Chrome™ or Chrome OS™
- Print from Google Drive™ for Mobile
- Print from Gmail™ Webmail Service for Mobile

Google Cloud Print Overview

Google Cloud Print™ is a Google service that allows you to print to a printer registered to your Google account using a network-compatible device (such as a mobile phone or computer) without installing the printer driver on the device.

Printing from Android™ apps requires installing the Google Cloud Print™ app from the Google Play™ Store.

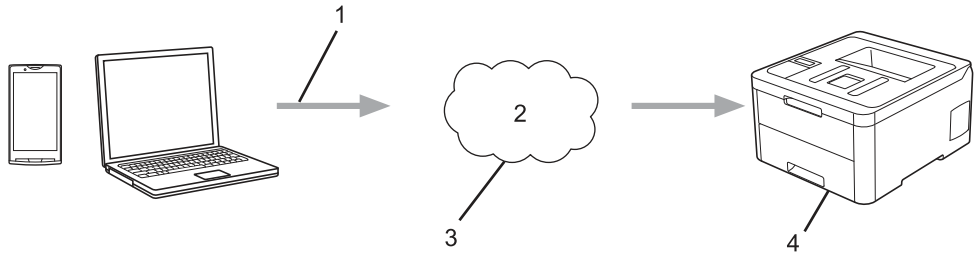

1. Print request
2. Internet
3. Google Cloud Print™
4. Printing

Related Information

- Google Cloud Print

Before Using Google Cloud Print

- Network Settings for Using Google Cloud Print
- Register Your Machine with Google Cloud Print Using Google Chrome™
- Register Your Machine with Google Cloud Print Using Web Based Management

Network Settings for Using Google Cloud Print

In order to use Google Cloud Print™, your Brother machine must be connected to a network that has access to the Internet, either through a wired or wireless connection. To connect and configure your machine correctly, see the *Quick Setup Guide* or related topics in this guide.

Related Information

- Before Using Google Cloud Print

Related Topics:

- Google Cloud Print Problems

Register Your Machine with Google Cloud Print Using Google Chrome™

Make sure you have already created a Google Account. If you do not have an account, use a computer or mobile device to access the Google website (https://accounts.google.com/signup) and create an account.

Make sure your Brother machine is idle before starting the registration process.

The steps in this section are examples for Windows users.

Screens on your computer may vary depending on your operating system and environment.

1. Open Google Chrome™ on your computer.
2. Sign in to your Google Account.
3. Click the Google Chrome™ menu icon, and then **Settings** > **Show advanced settings…**.
4. Click **Google Cloud Print** > **Manage**.
5. Follow the on-screen instructions to register your machine.
6. When a confirmation message appears on your machine, press the [OK] button.

If the confirmation message does not appear on your machine's LCD, repeat these steps.

7. When your Brother machine is successfully registered, it will appear in the **My devices** field.

Related Information

- Before Using Google Cloud Print

Register Your Machine with Google Cloud Print Using Web Based Management

Make sure you have already created a Google Account. If you do not have an account, use a computer or mobile device to access the Google website (https://accounts.google.com/signup) and create an account.

Make sure your Brother machine is idle before starting the registration process.

Before you begin to register your machine, confirm that the correct date and time are set on the machine.

1. Confirm that your Brother machine is connected to the same network as your computer or mobile device.
2. Start your web browser.
3. Type "https://machine's IP address" in your browser's address bar (where "machine's IP address" is the machine's IP address).

   For example:

   https://192.168.1.2
4. If the machine prompts you for a password, type it, and then click .
5. Click the **Network** tab.
6. Click the **Protocol** menu in the left navigation bar.
7. Make sure that **Google Cloud Print** is selected, and then click **Advanced Settings**.
8. Make sure that **Status** is set to **Enabled**. Click **Register**.
9. Follow the on-screen instructions to register your machine.
10. When a confirmation message appears on your machine, press the OK button.

If the confirmation message does not appear on your machine's LCD, repeat these steps.

11. Click **Google**.
12. The sign-in screen for Google Cloud Print™ appears. Sign in with your Google Account and follow the on-screen instructions to register your machine.
13. When you have finished registering your machine, return to the Web Based Management screen and make sure that **Registration Status** is set to **Registered**.

If your machine supports the Secure Function Lock feature, printing via Google Cloud Print™ is possible even if PC print for each user is restricted. To restrict printing via Google Cloud Print™, disable Google Cloud Print™ using Web Based Management or set the Secure Function Lock feature to Public Mode, and then restrict print for public users. See *Related Information*.

Related Information

- Before Using Google Cloud Print

Related Topics:

- Configure Public Mode for Secure Function Lock 3.0

Print from Google Chrome™ or Chrome OS™

1. Make sure your Brother machine is turned on.
2. Open the web page that you want to print.
3. Click the Google Chrome™ menu icon.
4. Click **Print**.
5. Select your machine from the printer list.
6. Change print options, if needed.
7. Click **Print**.

Related Information

- Google Cloud Print

Print from Google Drive™ for Mobile

1. Make sure your Brother machine is turned on.
2. Access Google Drive™ from your Android™ or iOS device's web browser.
3. Open the document that you want to print.
4. Tap the menu icon.
5. Tap **Print**.
6. Select your machine from the printer list.
7. Change print options, if needed.
8. Tap or **Print**.

Related Information

- Google Cloud Print

Print from Gmail™ Webmail Service for Mobile

1. Make sure your Brother machine is turned on.
2. Access the Gmail™ webmail service from your Android™ or iOS device's web browser.
3. Open the email that you want to print.
4. Tap the menu icon.

If **Print** appears beside the attachment name, you can also print the attachment. Tap **Print**, and then follow the instructions on your mobile device.

5. Tap **Print**.
6. Select your machine from the printer list.
7. Change print options, if needed.
8. Tap or **Print**.

Related Information

- Google Cloud Print

AirPrint

- AirPrint Overview
- Before Using AirPrint (macOS)
- Print Using AirPrint

AirPrint Overview

AirPrint is a printing solution for Apple operating systems that allows you to wirelessly print photos, email, web pages and documents from your iPad, iPhone, iPod touch and Mac computer without the need to install a driver.

For more information, visit Apple's website.

Use of the "Works with Apple badge" means that an accessory has been designed to work specifically with the technology identified in the badge and has been certified by the developer to meet Apple performance standards.

Related Information

- AirPrint

Related Topics:

- AirPrint Problems

Before Using AirPrint (macOS)

Before printing using macOS, add your Brother machine to the printer list on your Mac computer.

1. Select **System Preferences** from the Apple menu.
2. Click **Printers & Scanners**.
3. Click the + icon below the Printers pane on the left.
   The **Add** screen appears.
4. Select your Brother machine, and then select **AirPrint** from the **Use** pop-up menu.
5. Click **Add**.

Related Information

- AirPrint

Print Using AirPrint

- Print from iPad, iPhone, or iPod touch
- Print Using AirPrint (macOS)

Print from iPad, iPhone, or iPod touch

The procedure used to print may vary by application. Safari is used in the example below.

1. Make sure your Brother machine is turned on.
2. Use Safari to open the page that you want to print.
3. Tap or .
4. Tap **Print**.
5. Make sure your Brother machine is selected.
6. If a different machine (or no printer) is selected, tap **Printer**.

   A list of available machines appears.
7. Tap your machine's name in the list.
8. Select the desired options, such as the number of pages to print and 2-sided printing (if supported by your machine).
9. Tap **Print**.

Related Information

- Print Using AirPrint

Print Using AirPrint (macOS)

The procedure used to print may vary by application. Safari is used in the example below. Before printing, make sure your Brother machine is in the printer list on your Mac computer.

1. Make sure your Brother machine is turned on.
2. On your Mac computer, use Safari to open the page that you want to print.
3. Click the **File** menu, and then select **Print**.
4. Make sure your Brother machine is selected. If a different machine (or no printer) is selected, click the **Printer** pop-up menu, and then select your Brother machine.
5. Select the desired options, such as the number of pages to print and 2-sided printing (if supported by your machine).
6. Click **Print**.

Related Information

- Print Using AirPrint

Related Topics:

- Before Using AirPrint (macOS)

Mobile Printing for Windows

Mobile printing for Windows is a function to print wirelessly from your Windows mobile device. You can connect to the same network that your Brother machine is connected to and print without installing the printer driver on the device. Many Windows apps support this function.

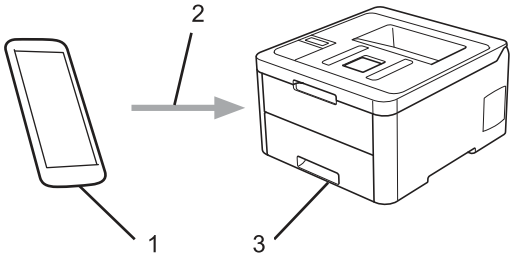

1. Windows mobile device (Windows 10 Mobile or later)
2. Wi-Fi® connection
3. Your Brother machine

Related Information

- Mobile/Web Connect

Mopria® Print Service

Mopria® Print Service is a print feature on Android™ mobile devices (Android™ version 4.4 or later) developed by the Mopria® Alliance. With this service, you can connect to the same network as your machine and print without additional setup. Many native Android™ apps support printing.

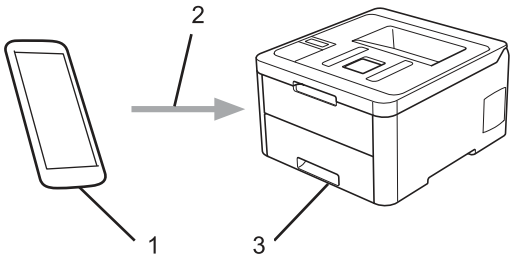

1. Android™ 4.4 or later
2. Wi-Fi® Connection
3. Your Brother Machine

You must download the Mopria® Print Service from the Google Play™ Store and install it on your Android™ device. Before using this service, you must turn it on.

Related Information

- Mobile/Web Connect

Brother iPrint&Scan for Mobile Devices

Use Brother iPrint&Scan to print from various mobile devices.

- For Android™ Devices

  Brother iPrint&Scan allows you to use features of your Brother machine directly from your Android™ device, without using a computer.

  Download and install Brother iPrint&Scan from the Google Play™ Store app.
- For all iOS supported devices including iPhone, iPad and iPod touch

  Brother iPrint&Scan allows you to use features of your Brother machine directly from your iOS device.

  Download and install Brother iPrint&Scan from the App Store.
- For Windows Devices

  Brother iPrint&Scan allows you to use features of your Brother machine directly from your Windows device, without using a computer.

  Download and install Brother iPrint&Scan from the Microsoft Store.

For more detailed information, visit support.brother.com/ips.

Related Information

- Mobile/Web Connect

Related Topics:

- Brother iPrint&Scan Overview

Near-Field Communication (NFC)

Related Models: HL-L3270CDW

Near-Field Communication (NFC) allows for simple transactions, data exchange, and wireless connections between two devices that are in close range of each other.

If your Android™ device is NFC-enabled, you can print data (photos, PDF files, text files, web pages and email messages) from the device by touching it to the NFC symbol on the machine's control panel.

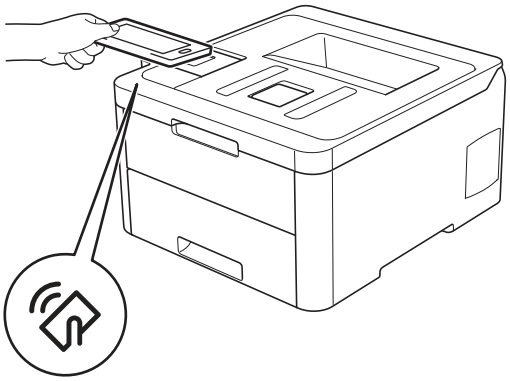

You must download and install Brother iPrint&Scan on your Android™ device to use this feature. For more detailed information, visit support.brother.com/ips.

Related Information

- Mobile/Web Connect

Brother iPrint&Scan for Windows and Mac

- Brother iPrint&Scan Overview

Brother iPrint&Scan Overview

Use Brother iPrint&Scan for Windows and Mac to print from your computer.

The following screen shows an example of Brother iPrint&Scan for Windows. The actual screen may differ depending on the version of the application.

- For Windows

  Go to your model's **Downloads** page on the Brother Solutions Center at support.brother.com to download the latest application.

- For Mac

  Download and install Brother iPrint&Scan from the App Store.

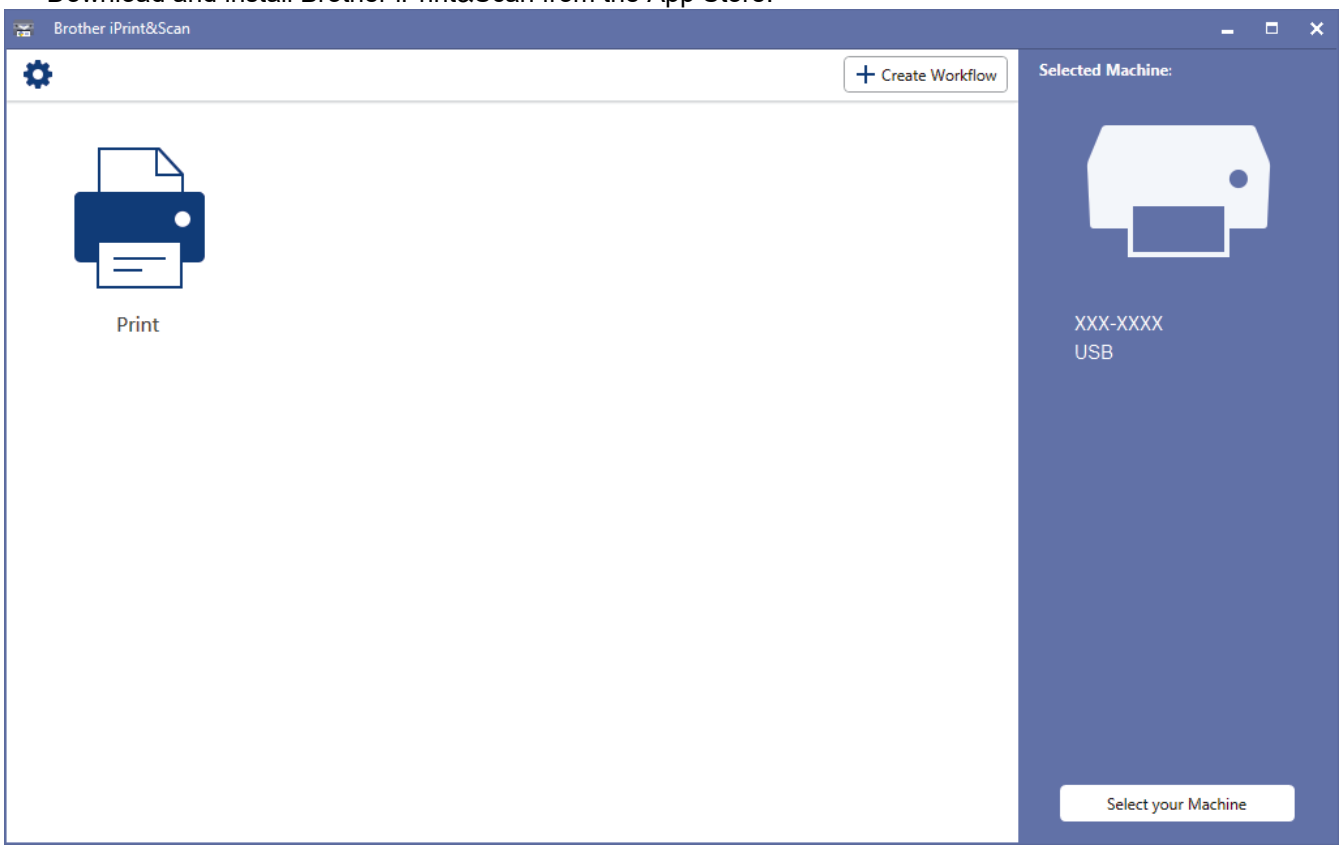

Related Information

- Brother iPrint&Scan for Windows and Mac

Related Topics:

- Brother iPrint&Scan for Mobile Devices

Troubleshooting

Use this section to resolve typical problems you may encounter when using your Brother machine. You can correct most problems yourself.

IMPORTANT

For technical help, you must call the country where you bought the machine. Calls must be made from within that country.

Using non-Brother supplies may affect the print quality, hardware performance, and machine reliability.

If you need additional help, go to the Brother Solutions Center at support.brother.com.

First, check the following:

- The machine's power cord is connected correctly and the machine's power is on. See the *Quick Setup Guide*.
- All of the protective materials have been removed. See the *Quick Setup Guide*.
- Paper is loaded correctly in the paper tray.
- The interface cables are securely connected to the machine and the computer, or the wireless connection is set up on both the machine and your computer.
- Error and maintenance messages

If you did not solve the problem with the checks, identify the problem and then see *Related Information*.

Related Information

- Error and Maintenance Messages
- Error Messages When Using the Brother Web Connect Feature
- Paper Jams
- Printing Problems
- Improve the Print Quality
- Network Problems
- Google Cloud Print Problems
- AirPrint Problems
- Other Problems
- Check the Machine Information
- Reset Functions

Error and Maintenance Messages

- HL-L3270CDW

  If the LCD displays errors and your Android™ device supports the NFC feature, touch your device to the NFC symbol on your Brother machine to access the Brother Solutions Center and browse the latest FAQs from your device. (Your mobile telephone provider's message and data rates may apply.)

  Make sure the NFC settings of both your Brother machine and your Android™ device are set to On.

As with any sophisticated office product, errors may occur and supply items may have to be replaced. If this happens, your machine identifies the error or required routine maintenance and shows the appropriate message. The most common error and maintenance messages are shown in the table.

Follow the instructions in the **Action** column to solve the error and remove the message.

You can correct most errors and perform routine maintenance by yourself. If you need more tips: Visit support.brother.com, and click the **FAQs & Troubleshooting** page.

>> HL-L3210CW/HL-L3230CDN/HL-L3230CDW
>> HL-L3270CDW

HL-L3210CW/HL-L3230CDN/HL-L3230CDW

Error Message	Cause	Action
2-sided Disabled	The back cover of the machine is not closed completely.	Close the back cover of the machine until it locks in the closed position.
Access Denied	The function you want to use is restricted by Secure Function Lock 3.0.	Ask your administrator to check your Secure Function Lock Settings.
Belt End Soon	The belt unit is near the end of its life.	Order a new belt unit before the LCD displays Replace Belt.
Calibrate	Calibration failed.	• Press and hold down ⏻ to turn off the machine. Wait a few seconds, and then turn it on again. Perform the color calibration again using the control panel. • Install a new belt unit. • If the problem continues, contact Brother Customer Service or your local Brother dealer.
Cartridge Error	The toner cartridge is not installed correctly.	Remove the toner cartridge and drum unit assembly for the color that is indicated on the LCD. Take out the toner cartridge, and put it back into the drum unit again. Re-install the toner cartridge and drum unit assembly back in the machine. If the problem continues, contact Brother Customer Service or your local Brother dealer.
Condensation	Condensation may have formed inside the machine after a room temperature change.	Leave the machine turned on. Wait for 30 minutes with the top cover in the open position. Then turn off the machine and close the cover. Turn it on again.
Cooling Down	The temperature of the inside of the machine is too hot. The machine pauses its current print job and goes into cooling down mode.	Wait until the machine has finished cooling down. Make sure all vents on the machine are clear of obstructions. When the machine has cooled down, it will resume printing.

Error Message	Cause	Action
Cover is Open	The top cover is not completely closed.	Open and then firmly close the top cover of the machine.
Cover is Open	The fuser cover is not completely closed.	Close the fuser cover located inside the back cover of the machine.
Drum !	The corona wires on the drum unit must be cleaned.	Clean the corona wires on the drum unit. 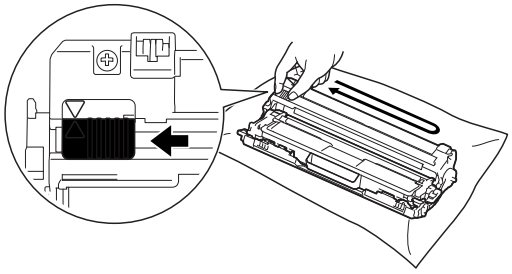 See *Related Information*: *Clean the Corona Wires*. If the problem continues, replace the drum unit with a new one.
Drum End Soon	The drum unit is near the end of its life.	Order a new drum unit before the LCD displays Replace Drum.
Drum Stop	It is time to replace the drum unit.	Replace the drum unit. See *Related Information*: *Replace the Drum Unit*.
Jam 2-sided	The paper is jammed underneath the paper tray or the fuser unit.	Remove the paper tray or open the back cover to gently remove the jammed paper.
Jam Inside	The paper is jammed inside the machine.	Open the top cover, remove the toner cartridges and drum unit assembly, and gently remove the jammed paper. Reinstall the toner cartridges and drum unit assemblies into the machine. Close the top cover.
Jam Manual Feed	The paper is jammed in the manual feed slot of the machine.	Gently remove the jammed paper from in and around the manual feed slot. Reload the paper into the manual feed slot, and then press **Go**.
Jam Rear	The paper is jammed in the back of the machine.	Open the fuser cover and gently remove the jammed paper. Close the fuser cover.
Jam Tray 1	The paper is jammed in the indicated paper tray.	Pull out the paper tray and gently remove all jammed paper.
Limit Exceeded	The print limit set in Secure Function Lock 3.0 was reached.	Ask your administrator to check your Secure Function Lock Settings.
Manual Feed	**Manual** was selected as the paper source in the printer driver, but there is no paper in the manual feed slot.	Place paper in the manual feed slot.
Media Mismatch	The media type specified in the printer driver differs from the paper type specified in the machine's menu.	Load the correct type of paper in the tray, and then select the correct media type in the Paper Type setting on the machine.
No Belt Unit	The belt unit is not installed or not installed correctly.	Reinstall the belt unit.
No Drum Unit	The drum unit is not installed correctly.	Reinstall the toner cartridges and drum unit assembly.

Error Message	Cause	Action
No Paper T1	The machine failed to feed paper from the indicated paper tray.	Do one of the following: • Refill paper in the paper tray indicated on the LCD. Make sure the paper guides are set to the correct size. • If paper is in the tray, remove it and load it again. Make sure the paper guides are set to the correct size. • Do not overfill the paper tray.
No Toner	The toner cartridge is not installed or not installed correctly.	Remove the toner cartridge and drum unit assembly. Remove the toner cartridge from the drum unit, and reinstall the toner cartridge back into the drum unit. Reinstall the toner cartridge and drum unit assembly back in the machine. If the problem continues, replace the toner cartridge.
No Tray T1	The paper tray is not installed or not installed correctly.	Reinstall the paper tray indicated on the LCD.
No Waste Toner	The waste toner box is not installed or not installed correctly.	Reinstall the waste toner box.
Out of Memory	The machine's memory is full.	Press and hold **Go** for about two seconds and reduce the print resolution.
Print Data Full	The machine's memory is full.	Press **Cancel** and delete the previously stored secure print data.
Print Unable ##	The machine has a mechanical problem.	• Press and hold ⏻ to turn off the machine, wait a few minutes, and then turn it on again. • If the problem continues, contact Brother Customer Service. Contact Brother Customer Service at: 1-877-BROTHER (1-877-276-8437) **(in USA)** www.brother.ca/support **(in Canada)** or to locate a Brother Authorized Service Center, visit: www.brother-usa.com/service
Registration	Registration failed.	• If the error continues, press and hold down ⏻ to turn off the machine. Wait a few seconds, and then turn on the machine again. Perform the color registration using the control panel. • Install a new belt unit. • If the problem continues, contact Brother Customer Service or your local Brother dealer.
Replace Belt	It is time to replace the belt unit.	Replace the belt unit with a new one. See *Related Information*: *Replace the Belt Unit.*

Error Message	Cause	Action
Replace Drum	It is time to replace the drum unit.	Replace the drum unit for the color indicated on the LCD. See *Related Information*: *Replace the Drum Unit.*
	If this message is displayed even after replacing the drum unit with new one, the drum unit counter was not reset.	Reset the drum unit counter. See *Related Information*: *Replace the Drum Unit.*
Replace Toner	The toner cartridge is at the end of its life. The machine stops all print operations.	Replace the toner cartridge for the color indicated on the LCD. See *Related Information*: *Replace the Toner Cartridge.*
Replace WT Box	It is time to replace the waste toner box.	Replace the waste toner box with a new one. See *Related Information*: *Replace the Waste Toner Box.*
Self-Diagnostic	The temperature of the fuser unit does not rise to a specified temperature within the specified time.	Press and hold ⏻ to turn off the machine, wait a few seconds, and then turn it on again. Leave the machine idle for 15 minutes with the power on.
	The fuser unit is too hot.	
Short paper	The length of the paper in the tray is too short for the machine to deliver it to the Face down output tray.	Open the back cover (Face up output tray) to let the printed page exit onto the Face up output tray. Remove the printed pages, and then press **Go**.
Size Error	The paper size defined in the printer driver is not supported by the defined tray.	Choose a paper size supported by the defined tray.
Size Error DX	The paper size specified in the machine's paper size setting is not available for automatic 2-sided printing.	Press **Cancel** (if required). Load the correct size of paper in the tray and set the tray for that paper size. Choose a paper size supported by 2-sided printing. Paper sizes available for automatic 2-sided printing are Letter, Legal, Mexico Legal, India Legal and Folio.
	The paper in the tray is not the correct size and is not available for automatic 2-sided printing.	
Size Mismatch	The paper in the tray is not the correct size.	Load the correct size of paper in the tray and set the size of paper for the tray. Press **Go**.
Toner Error	One or more toner cartridges are not installed or not installed correctly.	Pull out the drum units. Remove all the toner cartridges, and then put them back into the drum units.
Toner Low: BK Toner Low: C Toner Low: M Toner Low: Y (BK=Black, C=Cyan, M=Magenta, Y=Yellow.)	If the LCD displays this message, you can still print. The toner cartridge is near the end of its life.	Order a new toner cartridge before the LCD displays Replace Toner.
WT Box End Soon	The waste toner box is almost full.	Order a new waste toner box before the LCD displays Replace WT Box.

HL-L3270CDW

Error Message	Cause	Action
2-sided Disabled	The back cover of the machine is not closed completely.	Close the back cover of the machine until it locks in the closed position.
Access Denied	The function you want to use is restricted by Secure Function Lock 3.0.	Ask your administrator to check your Secure Function Lock Settings.
Calibration	Calibration failed.	• Press and hold down to turn off the machine. Wait a few seconds, and then turn it on again. Perform the color calibration again using the LCD. • Install a new belt unit. • If the problem continues, contact Brother Customer Service or your local Brother dealer.
Cartridge Error	The toner cartridge is not installed correctly.	Remove the toner cartridge and drum unit assembly for the color that is indicated on the LCD. Take out the toner cartridge, and put it back into the drum unit again. Install the toner cartridge and drum unit assembly back in the machine. If the problem continues, contact Brother Customer Service or your local Brother dealer.
Condensation	Condensation may have formed inside the machine after a room temperature change.	Leave the machine turned on. Wait for 30 minutes with the top cover in the open position. Then turn off the machine and close the cover. Turn it on again.
Cooling Down	The temperature of the inside of the machine is too hot. The machine pauses its current print job and goes into cooling down mode.	Wait until the machine has finished cooling down. Make sure all vents on the machine are clear of obstructions. When the machine has cooled down, it will resume printing.
Cover is Open	The top cover is not completely closed.	Open and then firmly close the top cover of the machine.
Cover is Open	The fuser cover is not completely closed.	Close the fuser cover located inside the back cover of the machine.
Drum !	The corona wires on the drum unit must be cleaned.	Clean the corona wires on the drum unit. 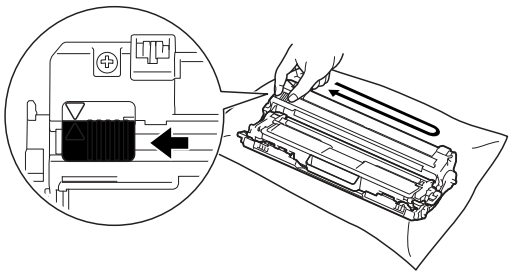 See *Related Information*: *Clean the Corona Wires*. If the problem continues, replace the drum unit with a new one.
Drum Stop	It is time to replace the drum unit.	Replace the drum unit. See *Related Information*: *Replace the Drum Unit*.
Jam 2-sided	The paper is jammed underneath the paper tray or the fuser unit.	Remove the paper tray or open the back cover to gently remove the jammed paper.

Error Message	Cause	Action
Jam Inside	The paper is jammed inside the machine.	Open the top cover, remove the toner cartridges and drum unit assembly, and gently remove the jammed paper. Reinstall the toner cartridges and drum unit assemblies into the machine. Close the top cover.
Jam Manual Feed	The paper is jammed in the manual feed slot of the machine.	Gently remove the jammed paper from in and around the manual feed slot. Reload the paper into the manual feed slot, and then press Retry.
Jam Rear	The paper is jammed in the back of the machine.	Open the fuser cover and gently remove the jammed paper. Close the fuser cover. If the error message remains, press Retry.
Jam Tray1	The paper is jammed in the indicated paper tray.	Pull out the paper tray and gently remove all jammed paper as shown in the animation on the LCD.
Limit Exceeded	The print limit set in Secure Function Lock 3.0 was reached.	Ask your administrator to check your Secure Function Lock Settings.
Manual Feed	**Manual** was selected as the paper source in the printer driver, but there is no paper in the manual feed slot.	Place paper in the manual feed slot.
Media Type Mismatch	The media type specified in the printer driver differs from the paper type specified in the machine's menu.	Load the correct type of paper in the tray indicated on the LCD, and then select the correct media type in the Paper Type setting on the machine.
No Belt Unit	The belt unit is not installed or not installed correctly.	Reinstall the belt unit.
No Drum Unit	The drum unit is not installed correctly.	Reinstall the toner cartridges and drum unit assembly.
No Paper Tray1	The machine failed to feed paper from the indicated paper tray.	Do one of the following: • Refill paper in the paper tray indicated on the LCD. Make sure the paper guides are set to the correct size. • If paper is in the tray, remove it and load it again. Make sure the paper guides are set to the correct size. • Do not overfill the paper tray.
No Toner	The toner cartridge is not installed or not installed correctly.	Remove the toner cartridge and drum unit assembly. Remove the toner cartridge from the drum unit, and reinstall the toner cartridge back into the drum unit. Reinstall the toner cartridge and drum unit assembly back in the machine. If the problem continues, replace the toner cartridge.
No Tray1	The paper tray is not installed or not installed correctly.	Reinstall the paper tray indicated on the LCD.
No Waste Toner	The waste toner box is not installed or not installed correctly.	Reinstall the waste toner box.
Out of Memory	The machine’s memory is full.	Press ✕ and reduce the print resolution.
Print Data Full	The machine’s memory is full.	Press ✕ and delete the previously stored secure print data.

Error Message	Cause	Action
Print Unable ##	The machine has a mechanical problem.	• Press and hold ⏻ to turn off the machine, wait a few minutes, and then turn it on again. • If the problem continues, contact Brother Customer Service. Contact Brother Customer Service at: 1-877-BROTHER (1-877-276-8437) **(in USA)** www.brother.ca/support **(in Canada)** or to locate a Brother Authorized Service Center, visit: www.brother-usa.com/service
Registration	Registration failed.	• Press and hold down ⏻ to turn off the machine. Wait a few seconds, and then turn it on again. Perform the color registration again using the LCD. • Install a new belt unit. • If the problem continues, contact Brother Customer Service or your local Brother dealer.
Replace Toner	The toner cartridge is at the end of its life. The machine stops all print operations.	Replace the toner cartridge for the color indicated on the LCD. See *Related Information*: *Replace the Toner Cartridge.*
Replace WT Box	It is time to replace the waste toner box.	Replace the waste toner box with a new one. See *Related Information*: *Replace the Waste Toner Box.*
Screen Init. Fail	The touchscreen was pressed before the power on initialization was completed.	Make sure nothing is touching the touchscreen.
	Debris may be stuck between the lower part of the touchscreen and its frame.	Insert a piece of stiff paper between the lower part of the touchscreen and its frame and slide it back and forth to push out any debris.
Self-Diagnostic	The temperature of the fuser unit does not rise to a specified temperature within the specified time.	Press and hold ⏻ to turn off the machine, wait a few seconds, and then turn it on again. Leave the machine idle for 15 minutes with the power on.
	The fuser unit is too hot.	
Short paper	The length of the paper in the tray is too short for the machine to deliver it to the Face down output tray.	Open the back cover (Face up output tray) to let the printed page exit onto the Face up output tray. Remove the printed pages, and then press Retry.
Size Error	The paper size defined in the printer driver is not supported by the defined tray.	Choose a paper size supported by the defined tray.

Error Message	Cause	Action
Size Error 2-sided	The paper size specified in the machine's paper size setting is not available for automatic 2-sided printing.	Press (if required). Load the correct size of paper in the tray and set the tray for that paper size.
	The paper in the tray is not the correct size and is not available for automatic 2-sided printing.	Choose a paper size supported by 2-sided printing. Paper sizes available for automatic 2-sided printing are Letter, Legal, Mexico Legal, India Legal and Folio.
Size Mismatch	The paper in the tray is not the correct size.	Load the correct size of paper in the tray and set the size of paper for the tray. Press Retry.
Supplies Belt End Soon	The belt unit is near the end of its life.	Order a new belt unit before the LCD displays Replace Belt.
Supplies Drum End Soon	The drum unit is near the end of its life.	Order a new drum unit before the LCD displays Replace Drum.
Supplies Replace Belt	It is time to replace the belt unit.	Replace the belt unit with a new one. See *Related Information*: *Replace the Belt Unit.*
Supplies Replace Drum	It is time to replace the drum unit.	Replace the drum unit for the color indicated on the LCD. See *Related Information*: *Replace the Drum Unit.*
	If this message is displayed even after replacing the drum unit with new one, the drum unit counter was not reset.	Reset the drum unit counter. See *Related Information*: *Replace the Drum Unit.*
Supplies Toner Low: X (X indicates the toner cartridge or drum unit color that is near the end of its life. BK=Black, C=Cyan, M=Magenta, Y=Yellow.)	If the LCD displays this message, you can still print. The toner cartridge is near the end of its life.	Order a new toner cartridge before the LCD displays Replace Toner.
Supplies WT Box End Soon	The waste toner box is almost full.	Order a new waste toner box before the LCD displays Replace WT Box.
Toner Error	One or more toner cartridges are not installed or not installed correctly.	Pull out the drum units. Remove all the toner cartridges, and then put them back into the drum units.

Related Information

- Troubleshooting

Related Topics:

- Load and Print Using the Paper Tray
- Replace Supplies
- Replace the Toner Cartridge
- Replace the Drum Unit
- Replace the Belt Unit
- Replace the Waste Toner Box
- Clean the Corona Wires
- Calibrate Color Output

Error Messages When Using the Brother Web Connect Feature

Your Brother machine displays an error message if an error occurs. The most common error messages are shown in the table.

You can correct most errors yourself. If, after reading this table, you still need help, the Brother Solutions Center offers the latest troubleshooting tips.

Go to the Brother Solutions Center at support.brother.com.

Connection Error

Error Messages	Cause	Action
`Connection Error 02` `Network connection failed. Verify that the network connection is good.`	The machine is not connected to a network.	• Verify that the network connection is good. • If the `Web` button was pressed soon after the machine was turned on, the network connection may not have been established yet. Wait and try again.
`Connection Error 03` `Connection failed to server. Check network settings.`	• Network or server settings are incorrect. • There is a problem with the network or server.	• Confirm that network settings are correct, or wait and try again later. • If the `Web` button was pressed soon after the machine was turned on, the network connection may not have been established yet. Wait and try again.
`Connection Error 07` `Connection failed to server. Wrong Date&Time.`	Date and time settings are incorrect.	Set the date and time correctly. Note that if the machine's power cord is disconnected, the date and time settings may have reset to factory settings.

Authentication Error

Error Messages	Cause	Action
`Authentication Error 01` `Incorrect PIN code. Enter PIN correctly.`	The PIN you entered to access the account is incorrect. The PIN is the four-digit number that was entered when registering the account to the machine.	Enter the correct PIN.
`Authentication Error 02` `Incorrect or expired ID, or this temporary ID is already used. Enter correctly or reissue temporary ID. Temporary ID is valid for 24 hours after it is issued.`	The temporary ID that was entered is incorrect.	Enter the correct temporary ID.
	The temporary ID that was entered has expired. A temporary ID is valid for 24 hours.	Apply for Brother Web Connect access again and receive a new temporary ID, and then use the new ID to register the account to the machine.
`Authentication Error 03` `Display name has already been registered. Enter another display name.`	The name you entered as the display name has already been registered to another service user.	Enter a different display name.

Server Error

Error Messages	Cause	Action
Server Error 01 Authentication failed. Do the following: 1. Go to http://bwc.brother.com to get a new temporary ID. 2. Press OK and enter your new temporary ID in the next screen.	The machine's authentication information (needed to access the service) has expired or is invalid.	Apply for Brother Web Connect access again to receive a new temporary ID, and then use the new ID to register the account to the machine.
Server Error 03 Failed to upload. Unsupported file or corrupt data. Confirm data of file.	The file you are trying to upload may have one of the following problems: • The file exceeds the service's limit on number of pixels, file size, etc. • The file type is not supported. • The file is corrupted.	The file cannot be used: • Check the service's size or format restrictions. • Save the file as a different type. • If possible, get a new, uncorrupted version of the file.
Server Error 13 Service temporarily unavailable. Try again later.	There is a problem with the service and it cannot be used now.	Wait and try again. If you get the message again, access the service from a computer to confirm if it is unavailable.

Shortcut Error

Error Messages	Cause	Action
Shortcut Error 02 Account is invalid. Please register account and shortcut again after deleting this shortcut.	The shortcut cannot be used because the account was deleted after the shortcut was registered.	Delete the shortcut, and then register the account and shortcut again.

Related Information

- Troubleshooting

Paper Jams

Always remove the remaining paper from the paper tray and straighten the stack when you are adding new paper. This helps prevent multiple sheets of paper from feeding through the machine at one time and prevents paper jams.

- Paper is Jammed in the Manual Feed Slot
- Paper is Jammed in the Paper Tray
- Paper is Jammed in the Back of the Machine
- Paper is Jammed Inside the Machine
- Paper is Jammed underneath the Paper Tray

Paper is Jammed in the Manual Feed Slot

If the machine's control panel or the Status Monitor indicates that there is a jam in the machine's manual feed slot, follow these steps:

1. Gently remove any paper that is jammed in or around the manual feed slot.

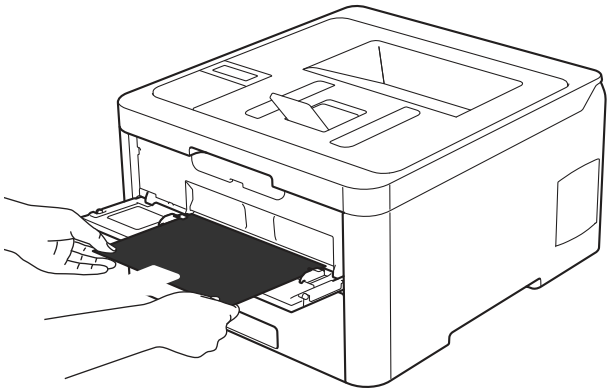

2. Reload the paper into the manual feed slot.
3. Do one of the following:
   - HL-L3210CW/HL-L3230CDN/HL-L3230CDW

     Press **Go** to resume printing.
   - HL-L3270CDW

     Press `[Retry]` to resume printing.

Related Information

- Paper Jams

Paper is Jammed in the Paper Tray

If the machine's control panel or the Status Monitor indicates that there is a jam in the paper tray, follow these steps:

1. Pull the paper tray completely out of the machine.

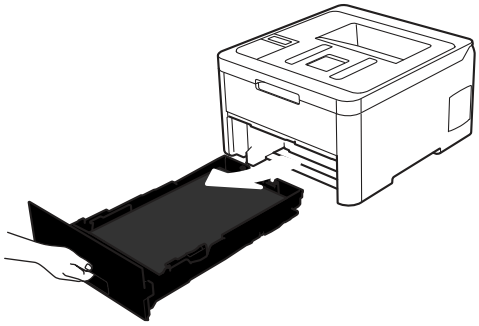

2. Slowly pull out the jammed paper.

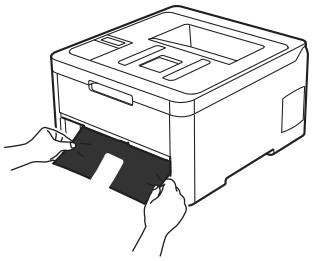

Pulling the jammed paper downward using both hands allows you to remove the paper more easily.

3. Fan the stack of paper to prevent further jams, and slide the paper guides to fit the paper size.

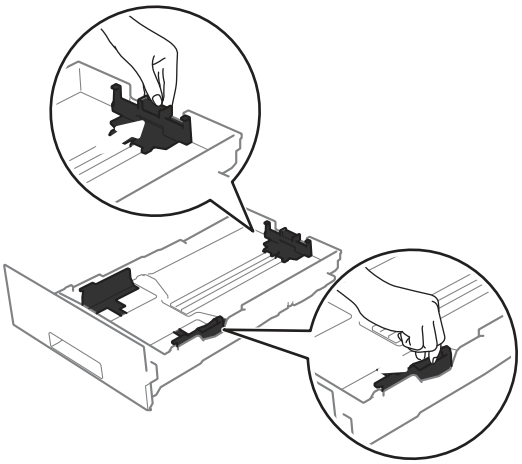

4. Make sure the paper is below the maximum paper mark (▼▼▼).

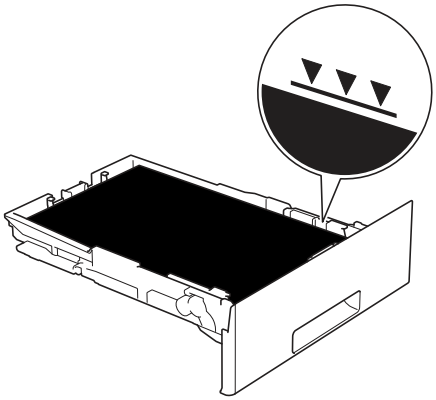

5. Put the paper tray firmly back in the machine.

Related Information

- Paper Jams

Paper is Jammed in the Back of the Machine

If the machine's control panel or the Status Monitor indicates that there is a jam in the back (Rear) of the machine, follow these steps:

1. Leave the machine turned on but do not use it for 10 minutes to allow its internal fan to cool the extremely hot parts inside the machine.
2. Open the back cover.

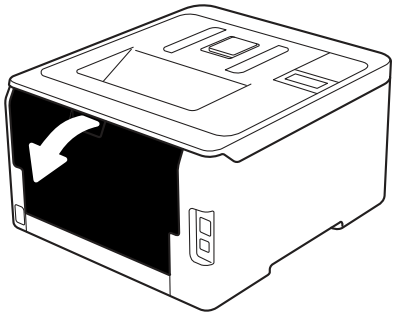

3. Pull the green tabs at the left and right sides toward you to release the fuser cover.

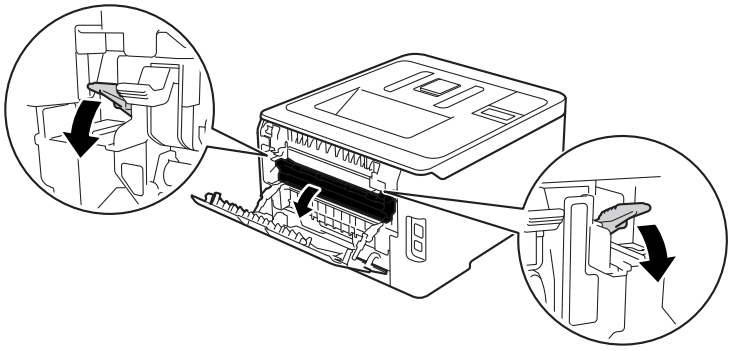

WARNING

HOT SURFACE

The machine's internal parts will be extremely hot. Wait for the machine to cool down before touching them.

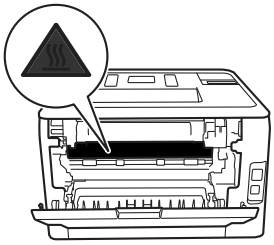

If the gray envelope levers inside the back cover are pulled down to the envelope position, lift these levers to the original position before pulling the green tabs down.

4. Use both hands to gently pull the jammed paper out of the fuser unit.

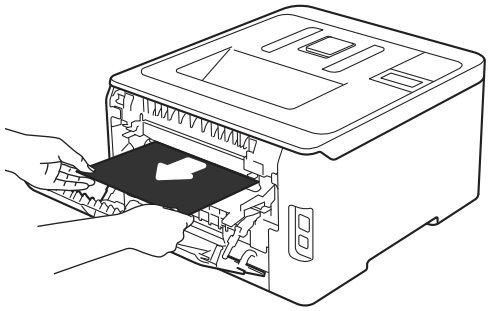

5. Close the fuser cover.

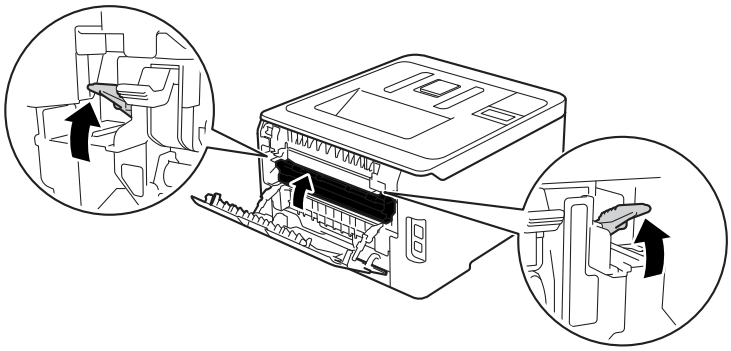

If you print on envelopes, pull down the gray envelope levers to the envelope position again before closing the back cover.

6. Close the back cover until it locks in the closed position.

Related Information

- Paper Jams

Paper is Jammed Inside the Machine

If the machine's control panel or the Status Monitor indicates that there is a jam inside the machine, follow these steps:

1. Leave the machine turned on but do not use it for 10 minutes to allow its internal fan to cool the extremely hot parts inside the machine.
2. Open the top cover until it locks in the open position.

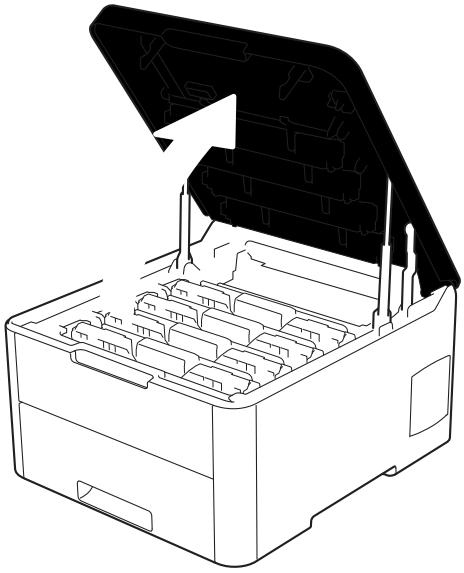

WARNING

HOT SURFACE

The machine's internal parts will be extremely hot. Wait for the machine to cool down before touching them.

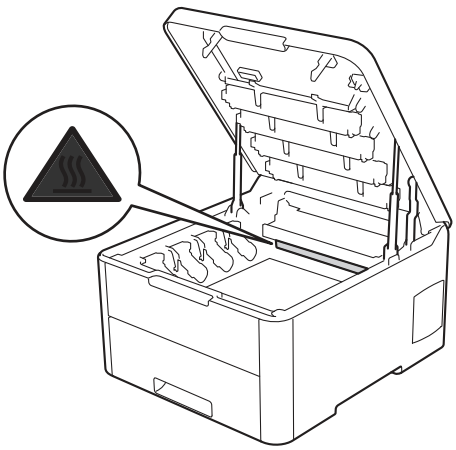

3. Remove all of the toner cartridge and drum unit assemblies.

CAUTION

We recommend placing the toner cartridge and drum unit assemblies on a clean, flat surface with disposable paper underneath it in case you accidentally spill or scatter toner.

IMPORTANT

To prevent damage to the machine from static electricity, DO NOT touch the electrodes shown in the illustration.

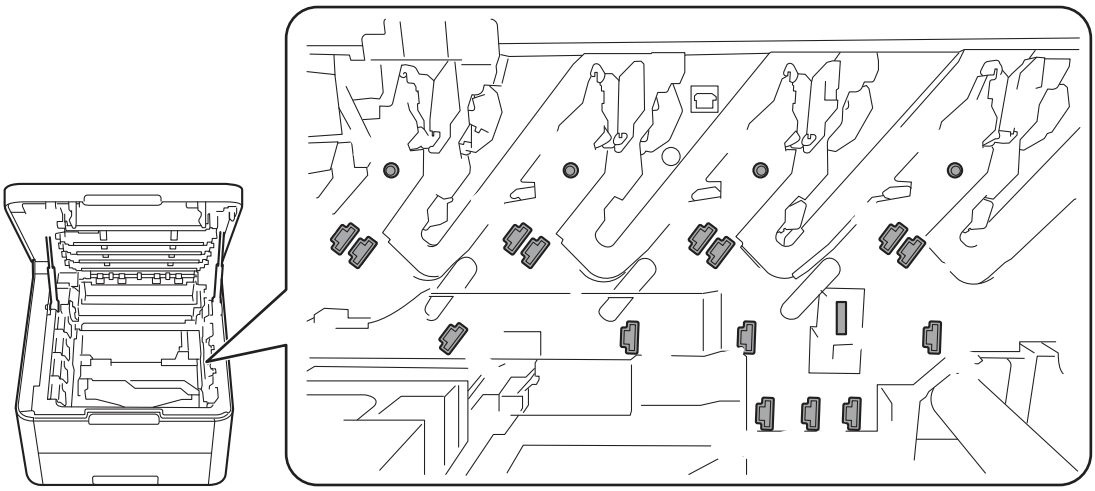

4. Gently remove the jammed paper slowly.

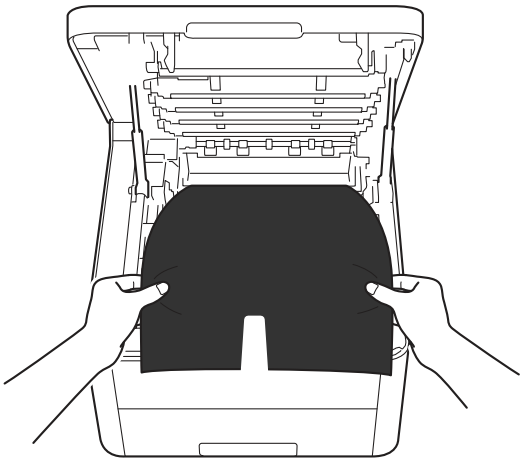

5. Reinsert each toner cartridge and drum unit assembly into the machine. Make sure that you match the toner cartridge color to the same color label on the machine for all four toner cartridge and drum unit assemblies.

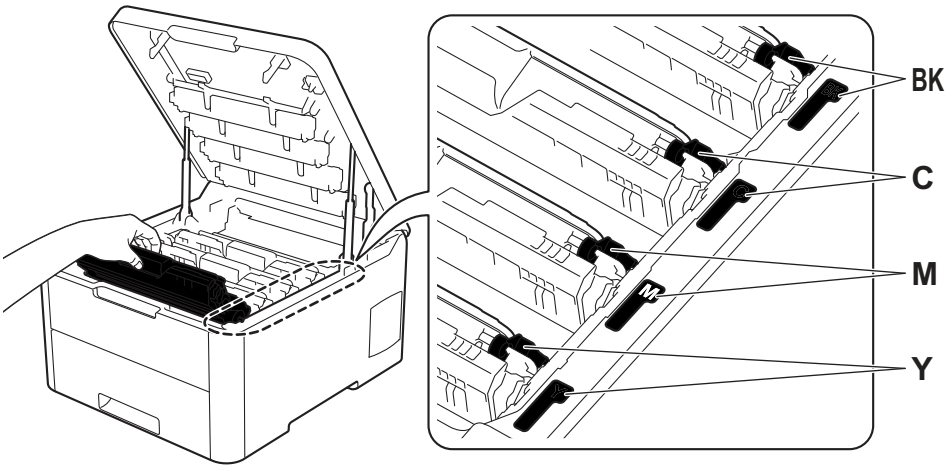

6. Close the machine's top cover.

Related Information

- Paper Jams

Paper is Jammed underneath the Paper Tray

If the machine's control panel or the Status Monitor indicates that there is a jam in the paper tray, follow these steps:

1. Leave the machine turned on but do not use it for 10 minutes to allow its internal fan to cool the extremely hot parts inside the machine.
2. Pull the paper tray completely out of the machine.

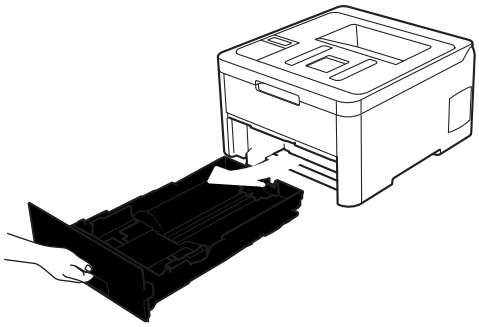

3. Make sure the jammed paper does not remain inside the machine.

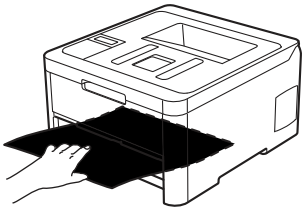

4. If paper is not jammed inside the machine, remove the paper from the paper tray, flip it over, and check underneath the paper tray.

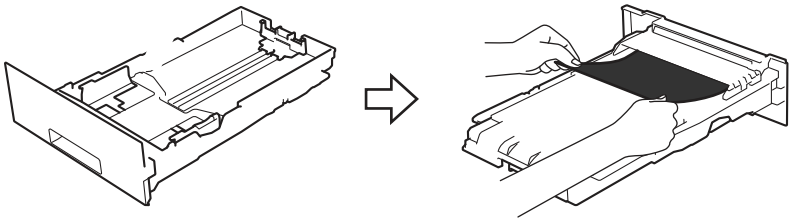

5. If the paper is not jammed in the paper tray, open the back cover.

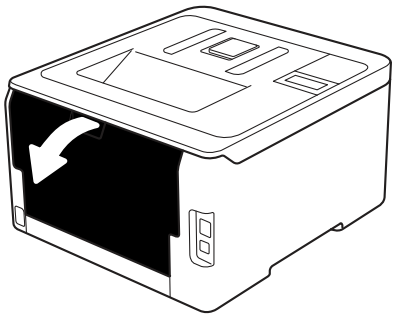

WARNING

HOT SURFACE

The machine's internal parts will be extremely hot. Wait for the machine to cool down before touching them.

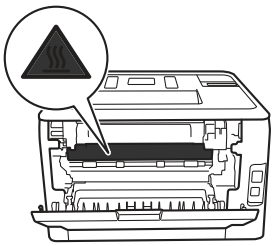

6. Use both hands to gently pull the jammed paper out of the back of the machine.

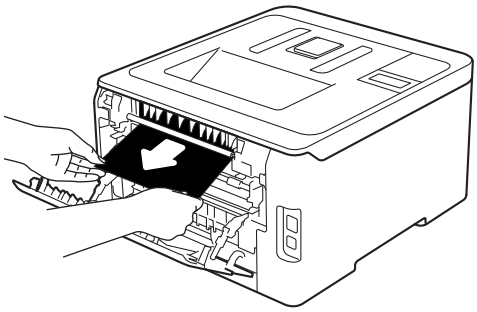

7. Close the back cover until it locks in the closed position.
8. Put the paper tray firmly back in the machine.

Related Information

- Paper Jams

Printing Problems

If, after reading this table, you still need help, go to the Brother Solutions Center at support.brother.com.

Difficulties	Suggestions
No printout	Check the machine is not in Power Off mode. If the machine is in Power Off mode, press on the control panel, and then send the print data again.
	Check that the correct printer driver has been installed and selected.
	Check to see if the Status Monitor or the machine's control panel displays an error status.
	Check that the machine is online: • Windows7 and Windows Server 2008 R2 Click **(Start)** >**Devices and Printers**. Right-click **Brother XXX-XXXX** and click **See what's printing**. Click **Printer** in the menu bar. Make sure **Use Printer Offline** is not selected. • Windows Server 2008 Click **(Start)** >**Control Panel** > **Hardware and Sound** > **Printers**. Right-click **Brother XXX-XXXX**. Make sure **Use Printer Online** is not listed. If it is listed, click this option to set the driver Online. • Windows 8 and Windows Server 2012 Move your mouse to the lower right corner of your desktop. When the menu bar appears, click **Settings** > **Control Panel** > **Hardware and Sound** > **Devices and Printers**. Right-click the **Brother XXX-XXXX**. Click **See what's printing**. If printer driver options appear, select your printer driver. Click **Printer** in the menu bar and make sure that **Use Printer Offline** is not selected. • Windows 10 and Windows Server 2016 Click > **Windows System** > **Control Panel**. In the **Hardware and Sound** group, click **View devices and printers**. Right-click the **Brother XXX-XXXX**. Click **See what's printing**. If printer driver options appear, select your printer driver. Click **Printer** in the menu bar and make sure that **Use Printer Offline** is not selected. • Windows Server 2012 R2 Click **Control Panel** on the **Start** screen. In the **Hardware** group, click **View devices and printers**. Right-click the **Brother XXX-XXXX**. Click **See what's printing**. If printer driver options appear, select your printer driver. Click **Printer** in the menu bar and make sure **Use Printer Offline** is not selected.
	• Mac Click the **System Preferences** menu, and then select the **Printers & Scanners** option. When the machine is offline, delete it using the button, and then add it using the button.

Difficulties	Suggestions
The machine is not printing or has stopped printing.	Cancel the print job and clear it from the machine's memory. The printout may be incomplete. Send the print data again. See *Related Information*:*Cancel a Print Job.*
The headers or footers appear when the document displays on the screen but they do not show up when it is printed.	There is an unprintable area on the top and bottom of the page. Adjust the top and bottom margins in your document to allow for this.
The machine prints unexpectedly or it prints garbage.	Cancel the print job and clear it from the machine's memory. The printout may be incomplete. Send the print data again. See *Related Information*:*Cancel a Print Job.*
	Check the settings in your application to make sure they are set up to work with your machine.
	Confirm that the Brother printer driver is selected in your application's Print window.
The machine prints the first couple of pages correctly, then some pages have missing text.	Check the settings in your application to make sure they are set up to work with your machine.
	Your machine is not receiving all of the data sent from the computer. Make sure you connected the interface cable correctly.
The machine does not print on both sides of the paper even though the printer driver setting is 2-sided and the machine supports automatic 2-sided printing.	Check the paper size setting in the printer driver. You must select Letter, Legal, Folio, Mexico Legal, or India Legal paper. Supported paper weight is 16 to 43 lb (60 to 163 g/m²).
Print speed is too slow.	Try changing the printer driver setting. The highest resolution needs longer data processing, sending and printing time.
	If you have enabled the Quiet Mode, disable the Quiet Mode on the printer driver or the machine's menu setting.
The machine does not feed paper.	If there is paper in the paper tray, make sure it is straight. If the paper is curled, straighten it. Sometimes it is helpful to remove the paper, turn the stack over and place it back in the paper tray.
	Reduce the amount of paper in the paper tray, and then try again.
	(For models with Manual Feed Slot)Make sure **Manual** is not selected for **Paper Source** in the printer driver.
	Clean the paper pick-up rollers.
The machine does not feed paper from the Manual feed slot. (For models with Manual Feed Slot)	Use both hands to push one sheet of paper firmly into the manual feed slot until the top edge of the paper presses against the paper feed rollers. Continue pressing the paper against the rollers until the machine grabs the paper and pulls it in further.
	Put only one sheet of paper in the manual feed slot.
	Make sure **Manual** is selected as **Paper Source** in the printer driver.
The machine does not feed envelopes.	(For models with Manual Feed Slot)Load one envelope at a time in the manual feed slot. Your application must be set to print the envelope size you are using. This is usually done in the Page Setup or Document Setup menu of your application.

Related Information

- Troubleshooting

Related Topics:

- Monitor the Status of the Machine from Your Computer (Windows)
- Monitor the Status of the Machine from Your Computer (Mac)
- Cancel a Print Job
- Load and Print Using the Paper Tray
- Clean the Paper Pick-up Rollers

Improve the Print Quality

If you have a print quality problem, print a test page first. If the printout looks good, the problem is probably not the machine. Check the interface cable connections and try printing a different document. If the printout or test page printed from the machine has a quality problem, check the examples of poor print quality and follow the recommendations in the table.

IMPORTANT

Using non-genuine supplies may affect the print quality, hardware performance, and machine reliability.

1. To get the best print quality, we suggest using recommended print media. Make sure you use paper that meets our specifications. See *Related Information*: *Recommended Print Media*
2. Check that the toner cartridge and drum unit assemblies are installed correctly.

Examples of poor print quality	Recommendation
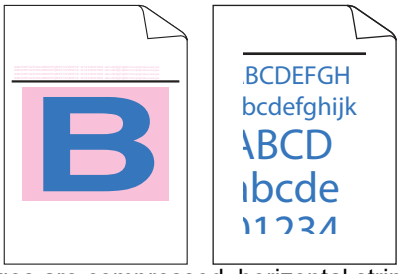 Printed pages are compressed, horizontal stripes appear, or characters in the top, bottom, left, or right margins are cut off	Adjust the print margins in your document's application and reprint the job.
Colors are light or faint on the whole page	• Use the machine's LCD to perform calibration.See *Related Information*: *Calibrate Color Output*. • Make sure Toner Save mode is off in the LCD or the printer driver. See *Related Information*: *Reduce Toner Consumption*. • Make sure the media type setting in the printer driver matches the type of paper you are using. • Shake all four toner cartridges gently. • Wipe the windows of all four LED heads with a dry, soft lint-free cloth. See *Related Information*: *Clean the LED Heads*.
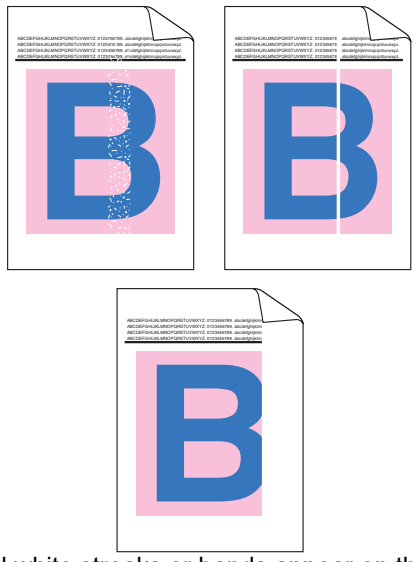 Vertical white streaks or bands appear on the page	• Wipe the windows of all four LED heads with a dry, soft lint-free cloth. • Make sure foreign material such as a torn piece of paper, sticky notes, or dust is not inside the machine or around the toner cartridge and drum unit assemblies.

Examples of poor print quality	Recommendation
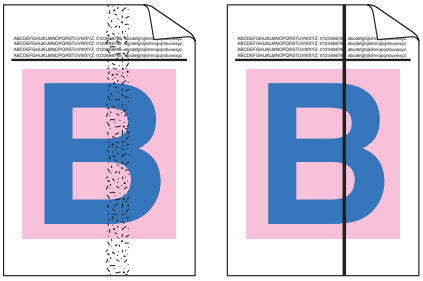 Vertical colored streaks or bands appear on the page	• Clean all four corona wires (one for each color) inside the drum unit by sliding the green tab. Make sure the green tab of the corona wire is in the home position (1). 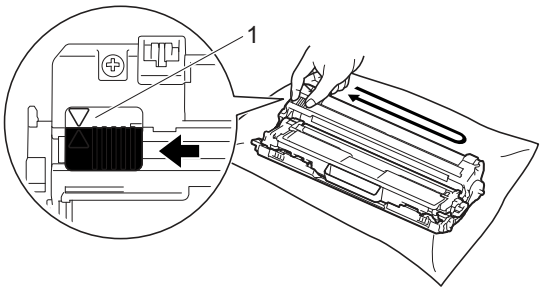 • Replace the toner cartridge that matches the color of the streak or band. To identify the color of the toner cartridge, visit the Brother Solutions Center at support.brother.com and view the **FAQs & Troubleshooting** page for your Brother model. See *Related Information*: *Replace the Toner Cartridge*. • Install a new drum unit. See *Related Information*: *Replace the Drum Unit*.
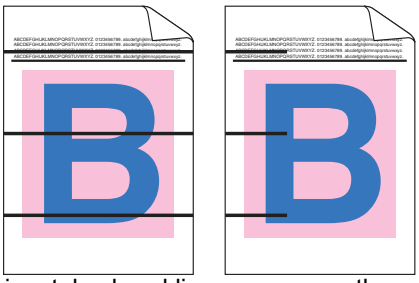 Horizontal colored lines appear on the page	• Identify the color causing the problem and replace the toner cartridge that matches the color of the line. To identify the color of the toner cartridge, visit the Brother Solutions Center at support.brother.com to see the **FAQs & Troubleshooting** page. See *Related Information*: *Replace the Toner Cartridge*. • Install a new drum unit. See *Related Information*: *Replace the Drum Unit*.
 White spots	• Make sure the media type setting in the printer driver matches the type of paper you are using. • Check the machine's environment. Conditions such as high humidity and high temperatures may cause this print quality problem. • If the problem is not solved after printing a few pages, the drum may have foreign material, such as glue from a label, stuck on the drum surface. Clean the drum unit. See *Related Information*: *Clean the Drum Unit*. • Install a new drum unit. See *Related Information*: *Replace the Drum Unit*.
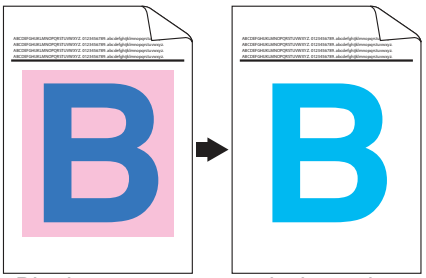 Blank page or some missing colors	• Identify the color causing the problem and install a new toner cartridge. To identify the color of the toner cartridge, visit the Brother Solutions Center at support.brother.com to see the **FAQs & Troubleshooting** page. See *Related Information*: *Replace the Toner Cartridge*. • Install a new drum unit. See *Related Information*: *Replace the Drum Unit*.

Examples of poor print quality	Recommendation
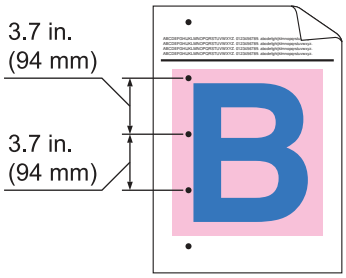 Colored spots at 3.7 in. (94 mm)	• If the problem is not solved after printing a few pages, the drum may have foreign material, such as glue from a label, stuck on the drum surface. Clean the drum unit. See *Related Information*: *Clean the Drum Unit.* • Install a new drum unit. See *Related Information*: *Replace the Drum Unit*.
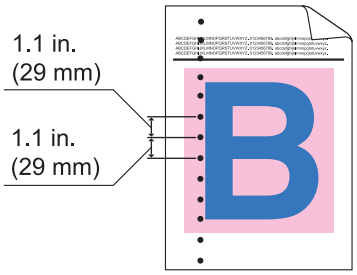 Colored spots at 1.1 in. (29 mm)	• Identify the color causing the problem and install a new toner cartridge. To identify the color of the toner cartridge, visit the Brother Solutions Center at support.brother.com to see the **FAQs & Troubleshooting** page. See *Related Information*: *Replace the Toner Cartridge*.
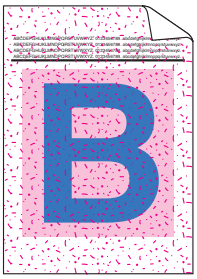 Toner scatter or toner stain	• Check the machine's environment. Conditions such as high humidity and high temperatures may cause this print quality problem. • Identify the color causing the problem and put in a new toner cartridge. To identify the color of the toner cartridge, visit the Brother Solutions Center at support.brother.com to see the **FAQs & Troubleshooting** page. See *Related Information*: *Replace the Toner Cartridge*. • Install a new drum unit. See *Related Information*: *Replace the Drum Unit*.
The color of your printouts is not what you expected	• To improve the color density, calibrate the colors using the LCD. • To adjust the print position of colors for sharper edges, perform the color registration using the LCD. • Make sure Toner Save mode is off in the LCD or the printer driver. • If the print quality of the black portion is not what you expected, select the **Enhance Black Printing** check box in the printer driver. • Clear the **Improve Gray Color** check box in the printer driver. • Identify the color causing the problem and put in a new toner cartridge. To identify the color of the toner cartridge, visit the Brother Solutions Center at support.brother.com to see the **FAQs & Troubleshooting** page. See *Related Information*: *Replace the Toner Cartridge*. • Install a new drum unit. See *Related Information*: *Replace the Drum Unit*.

Examples of poor print quality	Recommendation
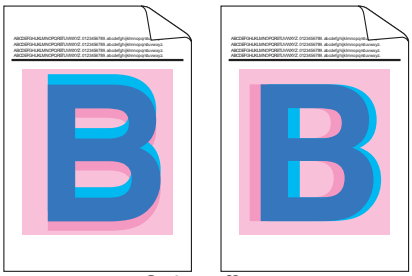 Color offset	• Make sure the machine is on a solid level surface. • Perform the color registration using the LCD. • Install a new drum unit. See *Related Information*: *Replace the Drum Unit*. • Install a new belt unit. See *Related Information*: *Replace the Belt Unit*.
 Uneven color density across the page	• Perform the calibration using the LCD. • Clear the **Improve Gray Color** check box in the printer driver. • Identify the color causing the problem and put in a new toner cartridge. To identify the color of the toner cartridge, visit the Brother Solutions Center at support.brother.com to see the **FAQs & Troubleshooting** page. See *Related Information*: *Replace the Toner Cartridge*. • Install a new drum unit. See *Related Information*: *Replace the Drum Unit*.
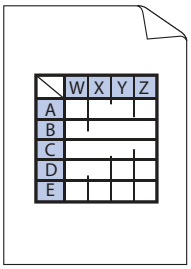 Missing thin lines in images	• Make sure Toner Save mode is off in the LCD or the printer driver. • Change the print resolution. • If you use a Windows printer driver, select **Improve Pattern Printing** in Print Setting of the **Basic** tab.
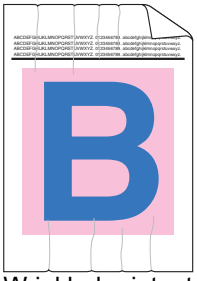 Wrinkled printout	• Check the paper type and quality. • Make sure the back cover is closed correctly. • Make sure the two gray levers inside the back cover are in the up position. • Make sure the media type setting in the printer driver matches the type of paper you are using.
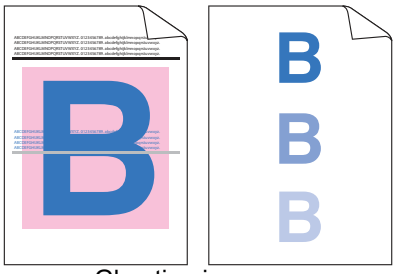 Ghosting images	• Check the machine's environment. Conditions such as low humidity and low temperatures may cause this print quality problem. • Make sure the media type setting in the printer driver matches the type of paper you are using. • Make sure the two gray levers inside the back cover are in the up position. • Install a new drum unit. See *Related Information*: *Replace the Drum Unit*.
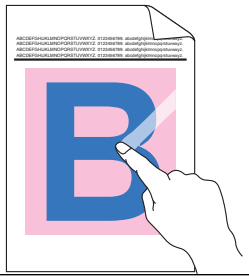	• Make sure the two gray levers inside the back cover are in the up position. • Make sure the media type setting in the printer driver matches the type of paper you are using. • Select **Improve Toner Fixing** mode in the printer driver. If this selection does not provide enough improvement, change the printer driver setting in

Examples of poor print quality	Recommendation
Toner smears easily	**Media Type** to a thick setting. If you are printing an envelope, select **Env. Thick** in the media type setting.
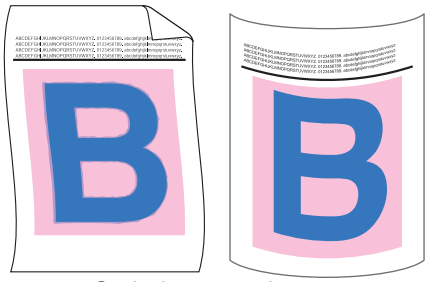 Curled or wavy image	• Select **Reduce Paper Curl** mode in the printer driver. If the problem is not solved, select **Plain Paper** in the media type setting. • If you are printing an envelope, select **Env. Thin** in the Media Type Setting of the printer driver. • If you do not use the machine often, the paper may have been in the paper tray too long. Turn over the stack of paper in the paper tray. Also, fan the paper stack and then rotate the paper 180° in the paper tray. • Store the paper where it will not be exposed to high temperatures and high humidity. • Open the back cover (Face up output tray) to let the printed paper exit onto the Face up output tray.
  Envelope creases	• Make sure the envelope levers inside the back cover are pulled down to the envelope position when you print envelopes. **NOTE** When you have finished printing, open the back cover and reset the two gray levers back to their original position (1) by lifting them up until they stop. 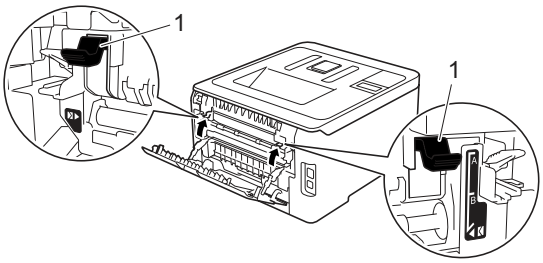

Related Information

- Troubleshooting

Related Topics:

- Recommended Print Media
- Test Print
- Calibrate Color Output
- Replace the Toner Cartridge
- Reduce Toner Consumption
- Replace the Drum Unit
- Replace the Belt Unit
- Clean the LED Heads
- Clean the Drum Unit

Network Problems

- Error Messages
- Use the Network Connection Repair Tool (Windows)
- Where Can I Find My Brother Machine's Network Settings?
- I Cannot Complete the Wireless Network Setup Configuration
- My Brother Machine Cannot Print over the Network
- I Want to Check that My Network Devices are Working Correctly

Error Messages

Your Brother machine will display an error message if an error occurs. The most common error messages are shown in the table.

>> HL-L3210CW/HL-L3230CDN/HL-L3230CDW
>> HL-L3270CDW

HL-L3210CW/HL-L3230CDN/HL-L3230CDW

Error Messages	Cause	Action
Authentication Error, contact your administrator.	Your authentication setting for the Store Print Log to Network feature is not correct.	• Make sure the **Username** and **Password** in **Authentication Setting** are correct. If the username is part of a domain, enter the username in one of the following styles: user@domain or domain\user. • Make sure the SNTP time server settings are configured correctly so the time matches the time used for authentication by Kerberos or NTLMv2.
Connection Error	Other devices are trying to connect to the Wi-Fi Direct network at the same time.	Make sure there are no other devices trying to connect to the Wi-Fi Direct network, and then try to configure the Wi-Fi Direct settings again.
Connection Fail	The Brother machine and your mobile device cannot communicate during the Wi-Fi Direct network configuration.	• Move the mobile device closer to your Brother machine. • Move your Brother machine and the mobile device to an obstruction-free area. • If you are using the PIN Method of WPS, make sure you have entered the correct PIN.
File Access Error, contact your administrator.	The Brother machine cannot access the destination folder for the Store Print Log to Network feature.	• Make sure the stored directory name is correct. • Make sure the stored directory is write-enabled. • Make sure the file is not locked.
Log Access Error	In Web Based Management, you have selected the **Cancel Print** option in the **Error Detection Setting** of **Store Print Log to Network**.	Wait for about 60 seconds until this message disappears from the LCD.
No Device	When configuring the Wi-Fi Direct network, the Brother machine cannot find your mobile device.	• Make sure your machine and mobile device are in the Wi-Fi Direct mode. • Move the mobile device closer to your Brother machine. • Move your Brother machine and the mobile device to an obstruction-free area. • If you are manually configuring the Wi-Fi Direct network, make sure you have entered the correct password.

Error Messages	Cause	Action
		• If your mobile device has a configuration page for how to obtain an IP address, make sure the IP address of your mobile device has been configured via DHCP.
Server Timeout, contact your administrator.	The Brother machine cannot connect to the server for the Store Print Log to Network feature.	• Make sure your server address is correct. • Make sure your server is connected to the network. • Make sure the machine is connected to the network.
Wrong Date&Time, contact your administrator.	The Brother machine does not obtain the time from the SNTP time server.	• Make sure the settings to access the SNTP time server are configured correctly in Web Based Management.

HL-L3270CDW

Error Messages	Cause	Action
A device is already connected. Press [OK].	The maximum number of mobile devices are already connected to the Wi-Fi Direct network when the Brother machine is the Group Owner (G/O).	After the current connection between your Brother machine and another mobile device has shut down, try to configure the Wi-Fi Direct settings again. You can confirm the connection status by printing the Network Configuration Report.
Authentication error, contact your administrator.	Your authentication setting for the Store Print Log to Network feature is not correct.	• Make sure the **Username** and **Password** in **Authentication Setting** are correct. If the username is part of a domain, enter the username in one of the following styles: user@domain or domain\user. • Make sure the SNTP time server settings are configured correctly so the time matches the time used for authentication by Kerberos or NTLMv2.
Connection Error	Other devices are trying to connect to the Wi-Fi Direct network at the same time.	Make sure there are no other devices trying to connect to the Wi-Fi Direct network, and then try to configure the Wi-Fi Direct settings again.
Connection Failed	The Brother machine and your mobile device cannot communicate during the Wi-Fi Direct network configuration.	• Move the mobile device closer to your Brother machine. • Move your Brother machine and the mobile device to an obstruction-free area. • If you are using the PIN Method of WPS, make sure you have entered the correct PIN.
File access error, contact your administrator.	The Brother machine cannot access the destination folder for the Store Print Log to Network feature.	• Make sure the stored directory name is correct. • Make sure the stored directory is write-enabled. • Make sure the file is not locked.
Log Access Error	In Web Based Management, you have selected the **Cancel Print** option in the **Error Detection Setting** of **Store Print Log to Network**.	Wait for about 60 seconds until this message disappears from the LCD.
No Device	When configuring the Wi-Fi Direct network, the Brother machine cannot find your mobile device.	• Make sure your machine and mobile device are in the Wi-Fi Direct mode. • Move the mobile device closer to your Brother machine. • Move your Brother machine and the mobile device to an obstruction-free area.

Error Messages	Cause	Action
		• If you are manually configuring the Wi-Fi Direct network, make sure you have entered the correct password. • If your mobile device has a configuration page for how to obtain an IP address, make sure the IP address of your mobile device has been configured via DHCP.
`Server timeout, contact your administrator.`	The Brother machine cannot connect to the server for the Store Print Log to Network feature.	• Make sure your server address is correct. • Make sure your server is connected to the network. • Make sure the machine is connected to the network.
`Wrong Date&Time, contact your administrator.`	The Brother machine does not obtain the time from the SNTP time server.	• Make sure the settings to access the SNTP time server are configured correctly in Web Based Management.

Related Information

- Network Problems

Use the Network Connection Repair Tool (Windows)

Use the Network Connection Repair Tool to fix the Brother machine's network settings. It will assign the correct IP address and Subnet Mask.

- Windows 7/Windows 8/Windows 10
  You must log on with Administrator rights.
- Make sure the Brother machine is turned on and is connected to the same network as your computer.

1. Do one of the following:

Option	Description
Windows Server 2008	Click **(Start)** > **All Programs** > **Brother** > **Brother Utilities**. Click the drop-down list and select your model name (if not already selected). Click **Tools** in the left navigation bar, and then click **Network Connection Repair Tool**.
Windows 7	Click **(Start)** > **All Programs** > **Brother** > **Brother Utilities**. Click the drop-down list and select your model name (if not already selected). Click **Tools** in the left navigation bar, and then click **Network Connection Repair Tool**.
Windows 8/ Windows 10	Launch (**Brother Utilities**), and then click the drop-down list and select your model name (if not already selected). Click **Tools** in the left navigation bar, and then click **Network Connection Repair Tool**.
Windows Server 2012 / 2012 R2 / 2016	Launch (**Brother Utilities**), and then click the drop-down list and select your model name (if not already selected). Click **Tools** in the left navigation bar, and then click **Network Connection Repair Tool**.

If the **User Account Control** screen appears, click **Yes**.

2. Follow the on-screen instructions.
3. Check the diagnosis by printing the Network Configuration Report or the Printer Settings page.

The Network Connection Repair Tool will start automatically if you select the **Enable Connection Repair Tool** option in the Status Monitor. Right-click the Status Monitor screen, and then click **Other Settings** > **Enable Connection Repair Tool**. This is not recommended when your network administrator has set the IP address to Static, since it will automatically change the IP address.

If the correct IP address and the Subnet Mask are still not assigned even after using the Network Connection Repair Tool, ask your network administrator for this information.

Related Information

- Network Problems

Related Topics:

- Print the Network Configuration Report
- My Brother Machine Cannot Print over the Network
- I Want to Check that My Network Devices are Working Correctly

Where Can I Find My Brother Machine's Network Settings?

- Print the Network Configuration Report
- Change Machine Settings from Your Computer

I Cannot Complete the Wireless Network Setup Configuration

Related Models: HL-L3210CW/HL-L3230CDW/HL-L3270CDW

Turn your wireless router off and back on. Then try to configure the wireless settings again. If you are unable to resolve the problem, follow the instructions below:

Investigate the problem using the WLAN Report.

Cause	Action	Interface
Your security settings (SSID/ Network Key) are not correct.	• Confirm the security settings using **Wireless Setup Helper**. For more information and to download the utility, go to your model's **Downloads** page on the Brother Solutions Center at support.brother.com. • Select and confirm that you are using the correct security settings. - See the instructions supplied with your wireless LAN access point/router for information on how to find the security settings. - The manufacturer's name or model number of the wireless LAN access point/router may be used as the default security settings. - Consult with the access point/router manufacturer, your Internet provider, or network administrator.	Wireless
Your Brother machine's MAC address is not allowed.	Confirm that the Brother machine's MAC Address is allowed in the filter. You can find the MAC Address on your Brother machine's control panel.	Wireless
Your wireless LAN access point/router is in stealth mode (not broadcasting the SSID).	• Enter the correct SSID name or Network Key manually. • Check the SSID name or the Network Key in the instructions supplied with your wireless LAN access point/router and reconfigure the wireless network setup.	Wireless
Your security settings (SSID/ password) are not correct.	• Confirm the SSID and password. - When you are configuring the network manually, the SSID and password are displayed on your Brother machine. If your mobile device supports the manual configuration, the SSID and password will be displayed on your mobile device's screen.	Wi-Fi Direct
You are using Android™ 4.0.	If your mobile device disconnects (approximately six minutes after using Wi-Fi Direct), try the one-push configuration using WPS (recommended) and set the Brother machine as a G/O.	Wi-Fi Direct
Your Brother machine is placed too far from your mobile device.	Move your Brother machine within about 3.3 feet (1 meter) of the mobile device when you configure the Wi-Fi Direct network settings.	Wi-Fi Direct
There are some obstructions (walls or furniture, for example) between your machine and the mobile device.	Move your Brother machine to an obstruction-free area.	Wi-Fi Direct
There is a wireless computer, Bluetooth®-supported device, microwave oven, or digital cordless phone near the Brother machine or the mobile device.	Move other devices away from the Brother machine or the mobile device.	Wi-Fi Direct

Cause	Action	Interface
If you have checked and tried all of the above, but still cannot complete the Wi-Fi Direct configuration, do the following:	• Turn your Brother machine off and back on. Then try to configure the Wi-Fi Direct settings again. • If you are using your Brother machine as a client, confirm how many devices are allowed in the current Wi-Fi Direct network, and then check how many devices are connected.	Wi-Fi Direct

For Windows

If your wireless connection has been interrupted, and you have checked and tried all of the above, we recommend using the Network Connection Repair Tool.

Related Information

- Network Problems

Related Topics:

- Configure Your Machine for a Wireless Network When the SSID Is Not Broadcast
- Use Wi-Fi Direct®

My Brother Machine Cannot Print over the Network

Cause	Action	Interface
Your security software blocks your machine's access to the network.	Some security software might block access without showing a security alert dialog box even after successful installation. To allow access, see the instructions for your security software or ask the software manufacturer.	Wired/Wireless
Your Brother machine was not assigned an available IP address.	• Confirm the IP address and the Subnet Mask. Verify that both the IP addresses and Subnet Masks of your computer and the Brother machine are correct and located on the same network. For more information about how to verify the IP address and the Subnet Mask, ask your network administrator. • Windows Confirm the IP address and the Subnet Mask using the Network Connection Repair Tool.	Wired/Wireless
The failed print job is still in your computer's print queue.	• If the failed print job is still in your computer's print queue, delete it. • Otherwise, double-click the printer icon in the following folder and cancel all documents: - Windows 7 Click (Start) > **Devices and Printers**. - Windows 8 Move your mouse to the lower right corner of your desktop. When the menu bar appears, click **Settings** > **Control Panel**. In the **Hardware and Sound** group, click **View devices and printers**. - Windows 10 and Windows Server 2016 Click > **Windows System** > **Control Panel**. In the **Hardware and Sound** group, click **View devices and printers**. - Windows Server 2008 Click **Start** > **Control Panel** > **Printers**. - Windows Server 2012 Move your mouse to the lower right corner of your desktop. When the menu bar appears, click **Settings** > **Control Panel**. In the **Hardware** group, click **View devices and printers** > **Printers**. - Windows Server 2012 R2 Click **Control Panel** on the **Start** screen. In the **Hardware** group, click **View devices and printers**. - Mac Click **System Preferences** > **Printers & Scanners**.	Wired/Wireless
Your Brother machine is not connected to the wireless network.	Print the WLAN Report to check the error code on the printed report.	Wireless

If you have checked and tried all of the above, but your Brother machine still cannot print, uninstall the printer driver and reinstall it.

Related Information

- Network Problems

Related Topics:

- Print the WLAN Report

- Wireless LAN Report Error Codes
- Use the Network Connection Repair Tool (Windows)
- I Want to Check that My Network Devices are Working Correctly

I Want to Check that My Network Devices are Working Correctly

Check	Action	Interface
Check that your Brother machine, access point/ router, or network hub is turned on.	**Check the following:** • The power cord is connected correctly and the Brother machine is turned on. • The access point/router or hub is turned on and its link button is blinking. • All protective packaging has been removed from the machine. • The toner cartridge and drum unit are installed correctly. • The machine's cover is fully closed. • Paper is inserted correctly in the paper tray. • (For wired networks) A network cable is securely connected to the Brother machine and to the router or hub.	Wired/Wireless
Check the **Link Status** in the Network Configuration Report or the Printer Settings page.	Print the Network Configuration Report and check that **Ethernet Link Status** or **Wireless Link Status** is **Link OK**.	Wired/Wireless
Check that you can "ping" the Brother machine from your computer.	Ping the Brother machine from your computer using the IP address or the node name in the Windows command prompt or Mac Terminal application: ping `<ipaddress>` or `<nodename>`. • Successful: Your Brother machine is working correctly and connected to the same network as your computer. • Unsuccessful: Your Brother machine is not connected to the same network as your computer. (Windows) Ask the network administrator and use the Network Connection Repair Tool to fix the IP address and the subnet mask. (Mac) Confirm that the IP address and the Subnet Mask are set correctly.	Wired/Wireless
Check that your Brother machine is connected to the wireless network.	Print the WLAN Report to check the error code on the printed report.	Wireless

If you have checked and tried all of the above but you are still having problems, see the instructions supplied with your wireless LAN access point/router to find the SSID and the Network Key information and set them correctly.

Related Information

- Network Problems

Related Topics:

- Print the Network Configuration Report
- Print the WLAN Report
- Wireless LAN Report Error Codes
- Use the Network Connection Repair Tool (Windows)
- My Brother Machine Cannot Print over the Network

Google Cloud Print Problems

Difficulty	Suggestions
My Brother machine is not displayed in the printer list.	Make sure your machine is turned on.
	Confirm that Google Cloud Print™ is enabled.
	Confirm that your machine is registered with Google Cloud Print™. If it is not registered, try to register again.
I cannot print.	Make sure your machine is turned on.
	Confirm your network settings. See *Related Information*.
	Certain files may not be printable, or may not appear exactly as they are displayed.
I cannot register my Brother machine with Google Cloud Print™.	Make sure your machine is connected to a network with Internet access.
	Verify that the date and time are set correctly on your machine.
I do not see a confirmation message on my Brother machine when I try to register with Google Cloud Print™, even after repeating the registration steps.	Make sure your Brother machine is idle while you are registering with Google Cloud Print™.

Related Information

- Troubleshooting

Related Topics:

- Network Settings for Using Google Cloud Print

AirPrint Problems

Difficulty	Suggestions
My Brother machine is not displayed in the printer list.	Make sure your Brother machine is turned on.
	Confirm the network settings.
	Move the mobile device closer to the wireless access point/router, or to your Brother machine.
I cannot print.	Make sure your Brother machine is turned on.
	Confirm the network settings.
I am trying to print a multiple-page document from an iOS device, but ONLY the first page is printing.	Make sure you are running the latest OS version. Refer to the following Apple support article for more information about AirPrint: support.apple.com/kb/HT4356.

Related Information

- Troubleshooting

Related Topics:

- AirPrint Overview

Other Problems

Difficulties	Suggestions
The machine will not turn on.	Adverse conditions on the power connection (such as lightning or a power surge) may have triggered the machine's internal safety mechanisms. Unplug the power cord. Wait for ten minutes, then plug in the power cord and press to turn on the machine. If the problem is not solved, press and hold to turn off the machine. If you are using a backup battery or surge suppressor device, disconnect it to make sure it is not the problem. Plug the machine's power cord directly into a different known working wall outlet and press to turn on the machine.
The machine cannot print EPS data that includes binary with the BR-Script3 printer driver.	**(Windows)** To print EPS data, do the following: 1. For Windows 7 and Windows Server 2008 R2: Click the **Start** button > **Devices and Printers**. For Windows Server 2008: Click the **(Start)** button > **Control Panel** > **Hardware and Sound** > **Printers**. For Windows 8 and Windows Server 2012: Move your mouse to the lower right corner of your desktop. When the menu bar appears, click **Settings** > **Control Panel**. In the **Hardware and Sound** [1] group, click **View devices and printers**. For Windows 10 and Windows Server 2016: Click > **Windows System** > **Control Panel**. In the **Hardware and Sound** group, click **View devices and printers**. For Windows Server 2012 R2: Click **Control Panel** on the **Start** screen. In the **Hardware** group, click **View devices and printers**. 2. Right-click the **Brother XXX-XXXX BR-Script3** icon, select **Printer properties**. 3. From the **Device Settings** tab, choose TBCP (Tagged binary communication protocol) in **Output Protocol**.
The Brother software cannot be installed.	**(Windows)** If the Security Software warning appears on the computer screen during the installation, change the Security Software settings to permit the Brother product setup program or other program to run. **(Mac)** If you are using a firewall function of anti-spyware or antivirus security software, temporarily disable it and then install the Brother software.

[1] For Windows Server 2012: **Hardware and Sound**

Related Information

- Troubleshooting

Check the Machine Information

Follow these instructions to check your Brother machine's serial number and firmware version.

>> HL-L3210CW/HL-L3230CDN/HL-L3230CDW
>> HL-L3270CDW

HL-L3210CW/HL-L3230CDN/HL-L3230CDW

1. Press ▲ or ▼ to select the [Machine Info.] option, and then press **OK**.
2. Press ▲ or ▼ to select one of the following options:

Option	Description
Serial No.	Check your machine's serial number.
Firmware Version	Check your machine's firmware version.
Page Counter	Check the total number of pages the machine has printed.
Parts Life	Check the supplies' life that remains available.

3. Press **OK**.

HL-L3270CDW

1. Press [Settings] > [All Settings] > [Machine Information].
2. Press one of the following options:

Option	Description
Serial No.	Check your machine's serial number.
Firmware Version	Check your machine's firmware version.
Firmware Update	Update your machine to the latest firmware.
Firmware Auto Check	View firmware information on the Home screen.
Page Counter	Check the total number of pages the machine has printed.
Parts Life	Check the percentage of the supplies' life that remains available.

3. Press .

Related Information

- Troubleshooting

Reset Functions

- Machine Reset
- Network Reset
- Factory Reset

Machine Reset

Use the Machine Reset function to reset the machine's settings to the factory settings.

The network settings and the security settings will not be reset by the Machine Reset function.

>> HL-L3210CW/HL-L3230CDN/HL-L3230CDW
>> HL-L3270CDW

HL-L3210CW/HL-L3230CDN/HL-L3230CDW

1. Press ▲ or ▼ to select the [Initial Setup] option, and then press **OK**.
2. Press ▲ or ▼ to select the [Reset] option, and then press **OK**.
3. Press ▲ or ▼ to select the [Machine Reset] option, and then press **OK**.
4. Press ▲ to select [Reset].
5. Press ▲ to restart the machine.

HL-L3270CDW

1. Press [Settings] > [All Settings] > [Initial Setup] > [Reset] > [Machine Reset].
2. You will be asked to reboot the machine. Press the option in the table to reboot the machine or to exit the process.

Option	Description
Press Yes for 2 seconds	Reboot the machine. The machine will begin the reset.
No	The machine will exit without rebooting.

If you do not reboot your machine, the reset process will not finish and your settings will remain unchanged.

3. Press .

Related Information

- Reset Functions

Network Reset

Use the Network Reset function to restore the print server's network settings, such as password and IP address, back to its default factory settings.

- Unplug all the interface cables before you perform a Network Reset.

>> HL-L3210CW/HL-L3230CDN/HL-L3230CDW
>> HL-L3270CDW

HL-L3210CW/HL-L3230CDN/HL-L3230CDW

1. Press ▲ or ▼ to select the [Initial Setup] option, and then press **OK**.
2. Press ▲ or ▼ to select the [Reset] option, and then press **OK**.
3. Press ▲ or ▼ to select the [Network Reset] option, and then press **OK**.
4. Press ▲ to select [Reset].
5. Press ▲ to restart the machine.

HL-L3270CDW

1. Press [Settings] > [All Settings] > [Initial Setup] > [Reset] > [Network Reset].
2. You will be asked to reboot the machine. Press the option in the table to reboot the machine or to exit the process.

Option	Description
Press Yes for 2 seconds	Reboot the machine. The machine will begin the reset.
No	The machine will exit without rebooting.

If you do not reboot your machine, the reset process will not finish and your settings will remain unchanged.

3. Press .

Related Information

- Reset Functions

Factory Reset

Use the Factory Reset function to restore all settings back to the factory settings.

Unplug all the interface cables before you perform a Factory Reset.

>> HL-L3210CW/HL-L3230CDN/HL-L3230CDW
>> HL-L3270CDW

HL-L3210CW/HL-L3230CDN/HL-L3230CDW

1. Press ▲ or ▼ to select the [Initial Setup] option, and then press **OK**.
2. Press ▲ or ▼ to select the [Reset] option, and then press **OK**.
3. Press ▲ or ▼ to select the [Factory Reset] option, and then press **OK**.
4. Press ▲ to select [Reset].
5. Press ▲ to restart the machine.

HL-L3270CDW

1. Press [Settings] > [All Settings] > [Initial Setup] > [Reset] > [Factory Reset].
2. You will be asked to reboot the machine. Press the option in the table to reboot the machine or to exit the process.

Option	Description
Press Yes for 2 seconds	Reboot the machine. The machine will begin the reset.
No	The machine will exit without rebooting.

If you do not reboot your machine, the reset process will not finish and your settings will remain unchanged.

3. Press .

Related Information

- Reset Functions

Routine Maintenance

- Replace Supplies
- Clean the Machine
- Calibrate Color Output
- Correct Color Print Alignment (Color Registration)
- Check the Remaining Part Life
- Pack and Ship Your Brother Machine
- Replace Periodic Maintenance Parts

Replace Supplies

You must replace supplies when the machine indicates that the life of the supply is over.

Using non-Brother supplies may affect the print quality, hardware performance, and machine reliability. The toner cartridge and drum unit are two separate supplies. Make sure both are installed as an assembly. The order number of supplies may vary depending on the country.

NOTE

- Be sure to seal up the used supplies tightly in a bag so that toner powder does not spill out of the cartridge.
- Visit www.brother.com/original/index.html for instructions on how to return your used supplies to the Brother collection and recycling program. If you choose not to return your used supply, discard the used supply according to local regulations, keeping it separate from domestic waste. If you have questions, contact your local waste disposal office.
- We recommend placing used and new supplies on a piece of paper to prevent accidentally spilling or scattering the material inside.
- If you use paper that is not a direct equivalent for the recommended print media, the life of supplies and machine parts may be reduced.
- The projected life for each of the toner cartridges is based on ISO/IEC 19798. Frequency of replacement will vary depending on the print volume, percentage of coverage, types of media used, and powering on/off the machine.
- Frequency of replacing supplies except toner cartridges will vary depending on the print volume, types of media used, and powering on/off the machine.
- Handle the toner cartridge carefully. If toner scatters on your hands or clothes, immediately wipe or wash it off with cold water.
- To avoid print quality problems, DO NOT touch the shaded parts shown in the illustrations.

  Toner Cartridge

  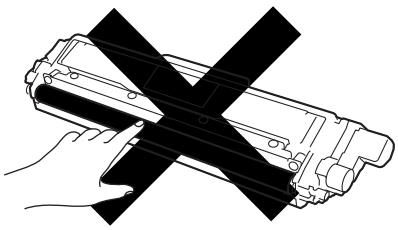

  Drum Unit

  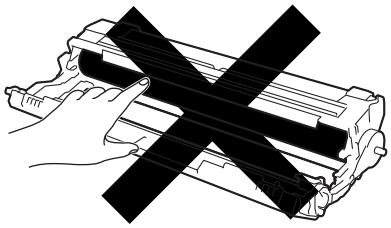

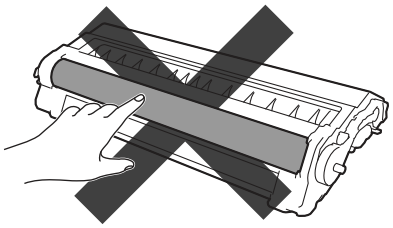

Belt Unit

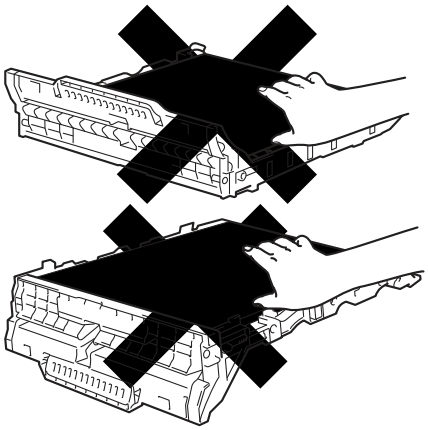

Waste Toner Box

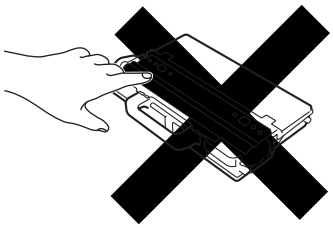

Related Information

- Routine Maintenance
  - Replace the Toner Cartridge
  - Replace the Drum Unit
  - Replace the Belt Unit
  - Replace the Waste Toner Box

Related Topics:

- Error and Maintenance Messages
- Supplies

Replace the Toner Cartridge

Before starting the replacement procedure, see *Related Information*: *Replace Supplies*.

1. Make sure the machine is turned on.
2. Open the top cover until it locks in the open position.

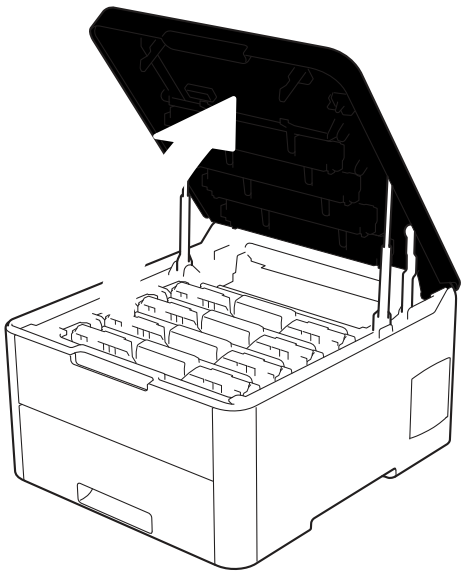

WARNING

HOT SURFACE

The machine's internal parts will be extremely hot. Wait for the machine to cool down before touching them.

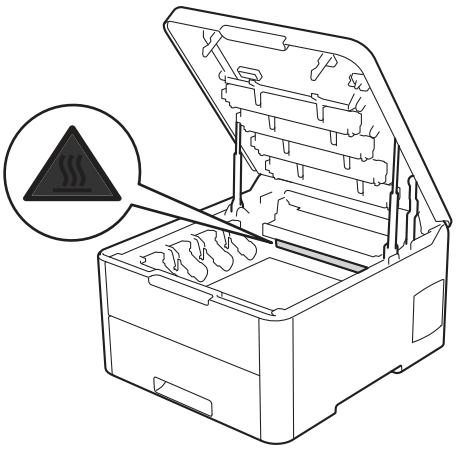

3. Remove the toner cartridge and drum unit assembly for the color shown on the LCD.

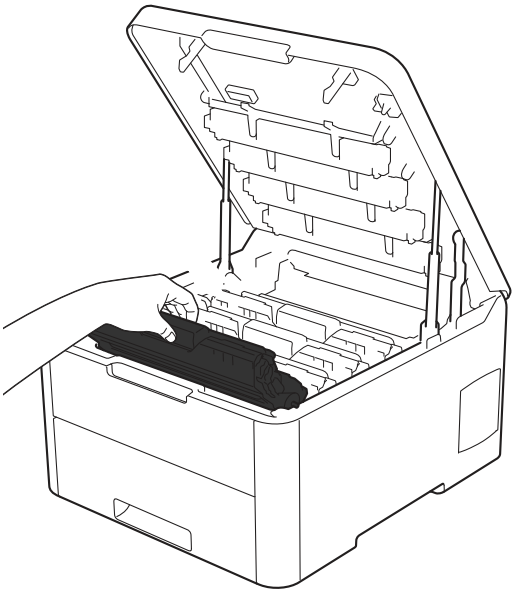

⚠ CAUTION

We recommend placing the toner cartridge and drum unit assemblies on a clean, flat surface with disposable paper underneath it in case you accidentally spill or scatter toner.

IMPORTANT

To prevent damage to the machine from static electricity, DO NOT touch the electrodes shown in the illustration.

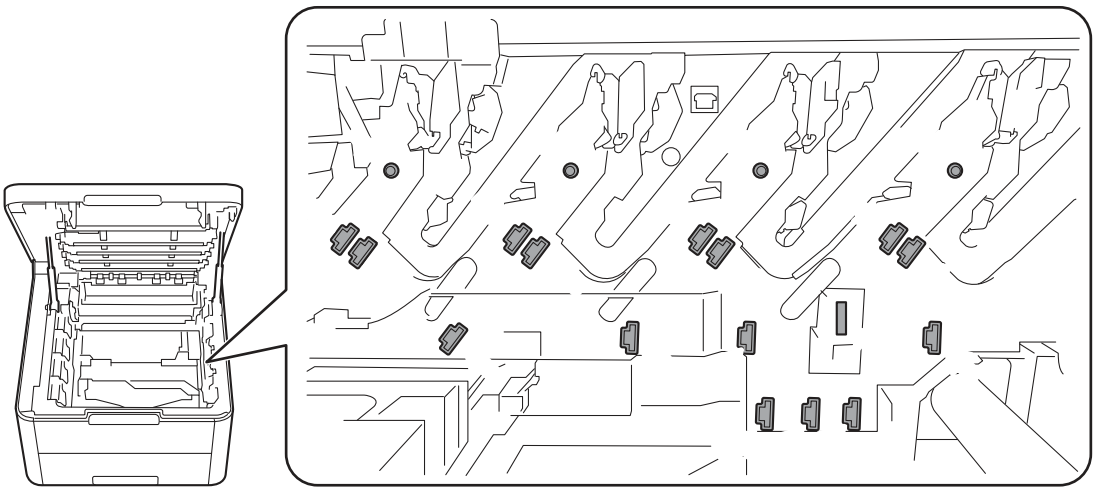

4. Push down the green lock lever and remove the toner cartridge from the drum unit.

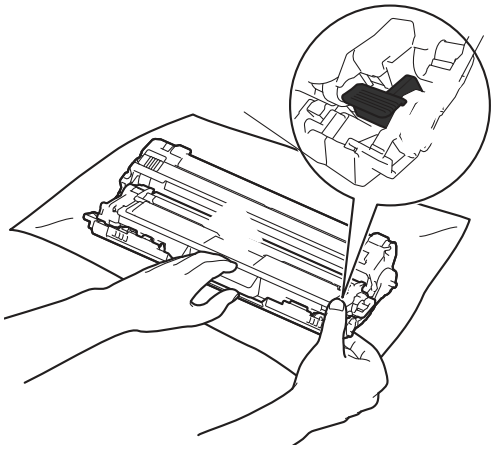

5. Unpack the new toner cartridge.
6. Remove the protective cover.

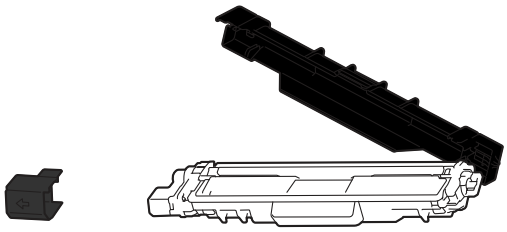

The shape of the toner cartridge will vary depending on your country and region.

7. Insert the new toner cartridge firmly into the drum unit until you hear it lock into place.

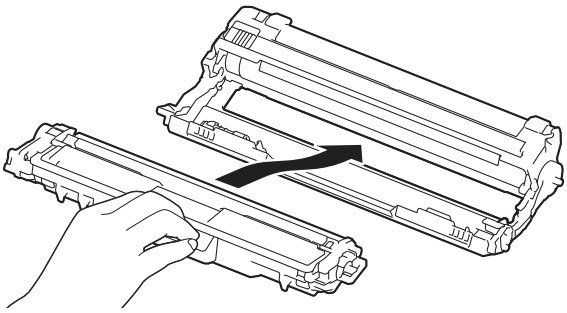

Make sure you put the toner cartridge in correctly or it may separate from the drum unit.

8. Clean the corona wire inside the drum unit by gently sliding the green tab from left to right and right to left several times. Repeat this for all the corona wires.

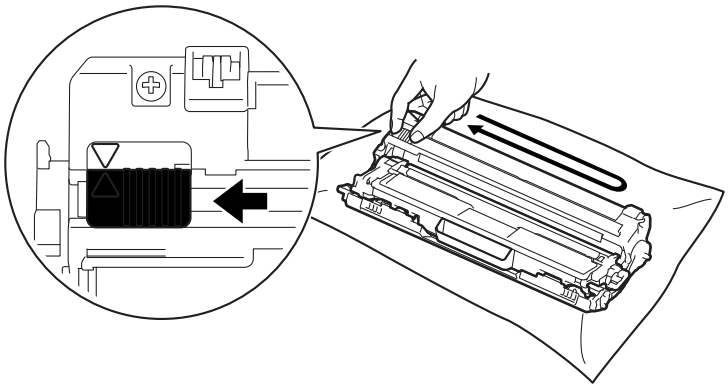

Be sure to return the green tab to the Home position (▲). The arrow on the tab must be aligned with the arrow on the drum unit. If it is not, printed pages may have a vertical stripe.

9. Slide the toner cartridge and drum unit assemblies into the machine. Make sure that you match the toner cartridge color to the same color label on the machine.

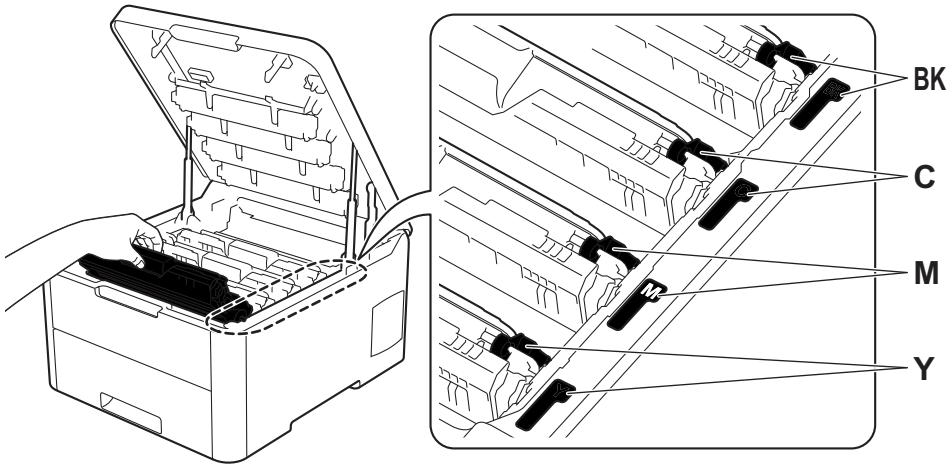

10. Close the machine's top cover.

- After replacing a toner cartridge, DO NOT turn off the machine or open the top cover until the machine's display returns to Ready Mode.
- The toner cartridge that comes with your Brother machine is a Starter toner cartridge.
- We recommend keeping a new toner cartridge ready for use when you see the Toner Low warning.
- To ensure high quality printing, we recommend using only Genuine Brother Brand toner cartridges. When you want to buy toner cartridges, contact Brother Customer Service or your local Brother dealer.
- DO NOT unpack the new toner cartridge until you are ready to install it.
- If a toner cartridge is left unpacked for a long time, the toner life will be shortened.
- Brother strongly recommends you DO NOT refill the toner cartridge provided with your machine. We also strongly recommend you continue to use only Genuine Brother Brand replacement toner cartridges. Use or attempted use of third-party toner and/or cartridges in the Brother machine may cause damage to the machine and/or may result in unsatisfactory print quality. Our limited warranty coverage does not apply to any problem that is caused by the use of third party toner and/or cartridges. To protect your investment and obtain premium performance from the Brother machine, we strongly recommend the use of Genuine Brother Supplies.

Related Information

- Replace Supplies

Related Topics:

- Error and Maintenance Messages
- Improve the Print Quality

Replace the Drum Unit

Before starting the replacement procedure, see *Related Information*: *Replace Supplies*.

>> Replace the Drum Unit
>> Reset the Drum Counter (HL-L3210CW/HL-L3230CDN/HL-L3230CDW)
>> Reset the Drum Counter (HL-L3270CDW)

Replace the Drum Unit

1. Make sure the machine is turned on.
2. Open the top cover until it locks in the open position.

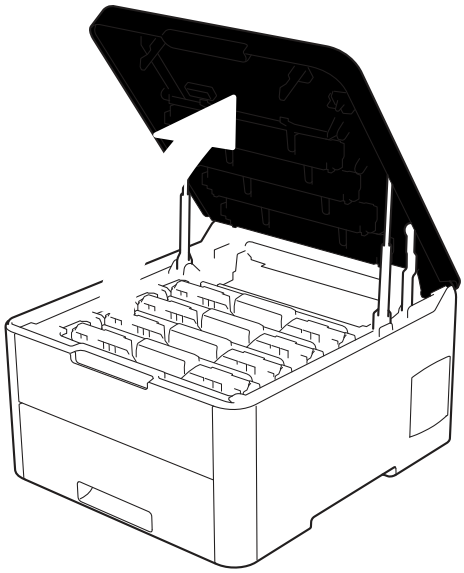

WARNING

HOT SURFACE

The machine's internal parts will be extremely hot. Wait for the machine to cool down before touching them.

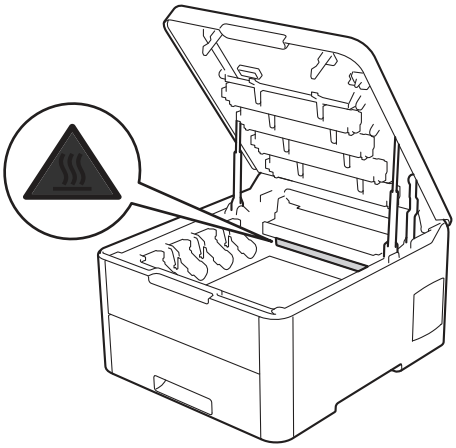

3. Remove the toner cartridge and drum unit assembly for the color shown on the LCD.

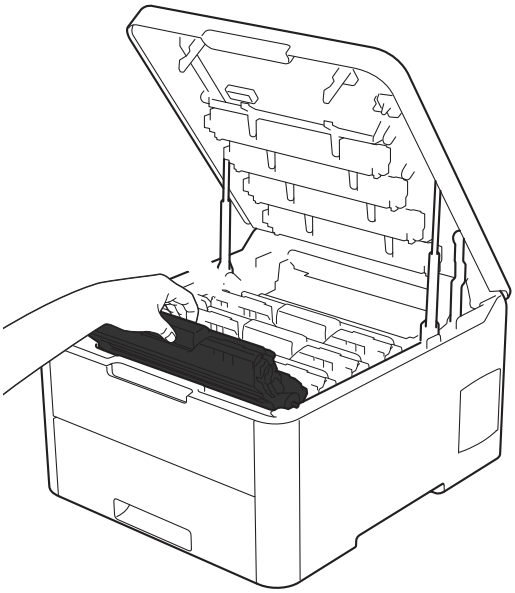

⚠ CAUTION

We recommend placing the toner cartridge and drum unit assemblies on a clean, flat surface with disposable paper underneath it in case you accidentally spill or scatter toner.

IMPORTANT

To prevent damage to the machine from static electricity, DO NOT touch the electrodes shown in the illustration.

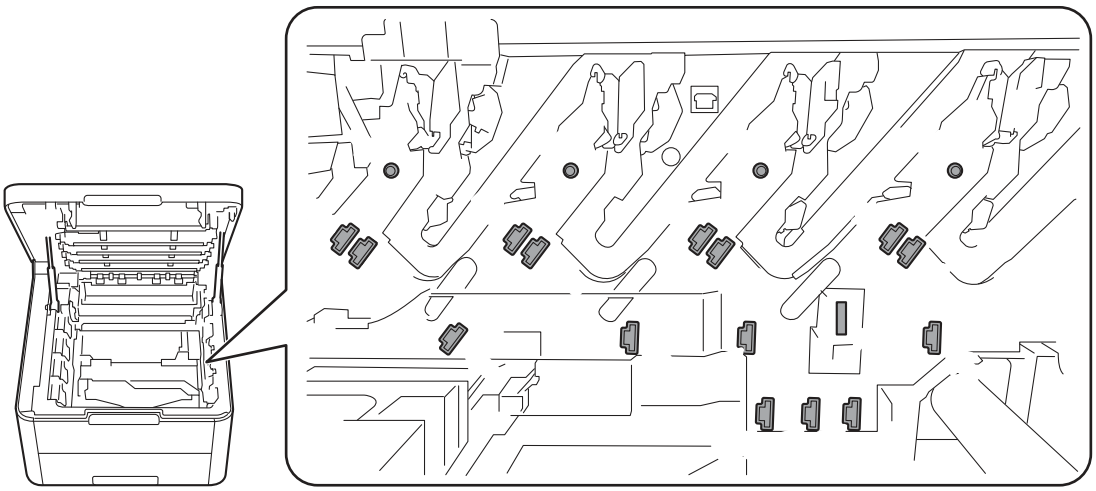

4. Push down the green lock lever and remove the toner cartridge from the drum unit.

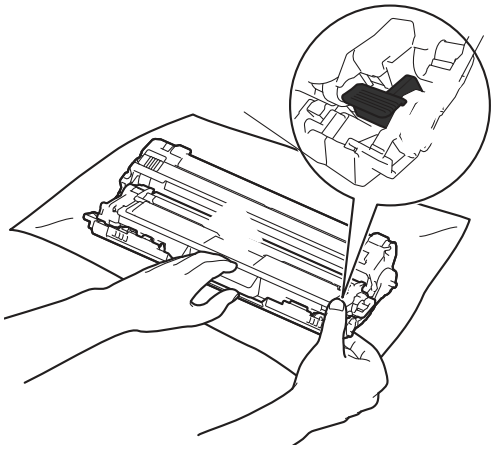

5. Unpack the new drum unit.
6. Remove the protective cover.

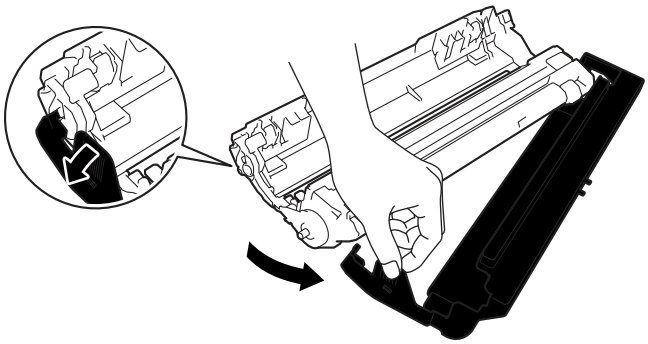

7. Reinsert the toner cartridge firmly into the new drum unit until you hear it lock into place.

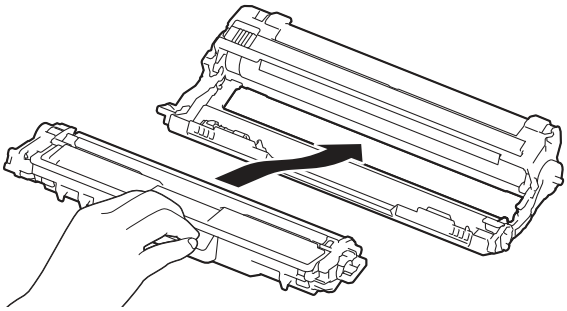

Make sure you put the toner cartridge in correctly or it may separate from the drum unit.

8. Clean the corona wire inside the drum unit by gently sliding the green tab from left to right and right to left several times. Repeat this for all the corona wires.

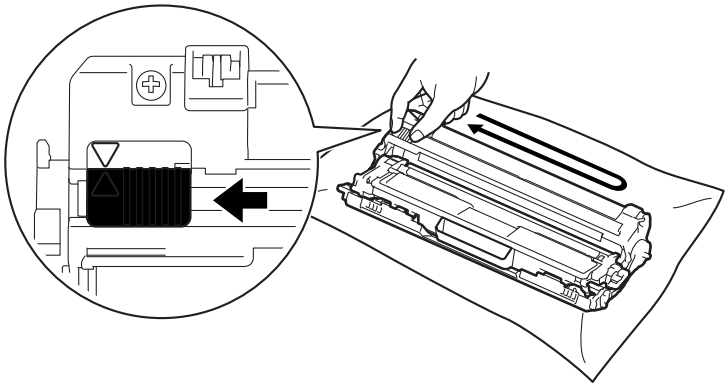

Be sure to return the green tab to the Home position (▲). The arrow on the tab must be aligned with the arrow on the drum unit. If it is not, printed pages may have a vertical stripe.

9. Slide the toner cartridge and drum unit assemblies into the machine. Make sure that you match the toner cartridge color to the same color label on the machine.

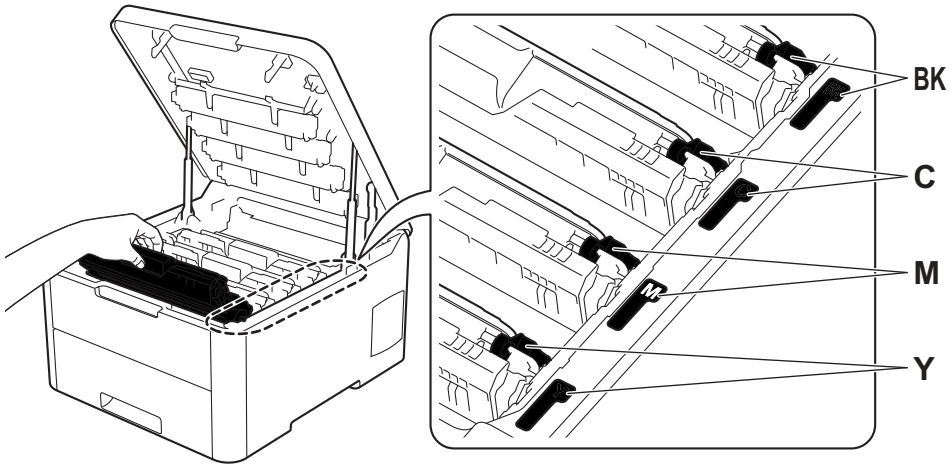

10. Close the machine's top cover.
11. Reset the drum counter by following the next section.

NOTE

- Drum wear and tear occurs due to use and rotation of the drum and interaction with paper, toner and other materials in the paper path. In designing this product, Brother decided to use the number of rotations of the drum as a reasonable determinant of the drum life. When a drum reaches the factory-established rotation limit corresponding to the rated page yield, the product's LCD will advise you to replace the drum. The product will continue to function; however, print quality may not be optimal.
- If an unpacked drum unit is placed in direct sunlight (or artificial light for long periods of time), the unit may be damaged.
- There are many factors that determine the actual drum life, such as the temperature, humidity, type of paper, type of toner used and so on. Under ideal conditions, the average drum life is estimated at approximately 18,000 pages based on one page per job [A4/letter simplex pages]. The number of pages may be affected due to a variety of factors including but not limited to media type and media size.

  Because we have no control over the many factors that determine the actual drum life, we cannot guarantee a minimum number of pages that will be printed by your drum.
- For best performance, use only genuine Brother toner.
- The machine should be used only in a clean, dust-free environment with adequate ventilation.

  Printing with a non-Brother drum unit may reduce not only the print quality but also the quality and life of the machine itself. Warranty coverage does not apply to problems caused by the use of a non-Brother drum unit.

IMPORTANT

- To avoid print quality issues or damage to the machine, DO NOT reset the drum counter unless you are replacing the drum unit.
- If you reset the drum counter without replacing the drum unit, the machine will not be able to correctly calculate the remaining drum life.
- Using non-genuine Brother supplies may affect the print quality, hardware performance, and machine reliability.

Reset the Drum Counter (HL-L3210CW/HL-L3230CDN/HL-L3230CDW)

1. Make sure the machine is turned on.
2. Make sure the machine's cover is closed.
3. Press **OK** and ▲ at the same time.

4. Press **OK** to select [Drum].
5. Select the toner color for the drum unit you just replaced, and then press **OK**.
6. Select [Reset] to reset the drum counter.

Reset the Drum Counter (HL-L3270CDW)

1. Make sure the machine is turned on.
2. Press and hold for about five seconds.
3. Press [Drum].
4. Select the toner color for the drum unit you just replaced.
5. Press [Yes].

Related Information

- Replace Supplies

Related Topics:

- Error and Maintenance Messages
- Improve the Print Quality

Replace the Belt Unit

Before starting the replacement procedure, see *Related Information*: *Replace Supplies*.

>> Replace the Belt Unit
>> Reset the Belt Unit Counter (HL-L3210CW/HL-L3230CDN/HL-L3230CDW)
>> Reset the Belt Unit Counter (HL-L3270CDW)

Replace the Belt Unit

1. Make sure the machine is turned on.
2. Open the top cover until it locks in the open position.

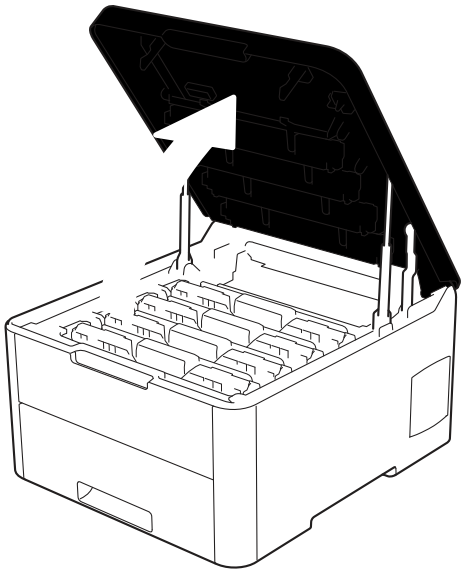

WARNING

HOT SURFACE

The machine's internal parts will be extremely hot. Wait for the machine to cool down before touching them.

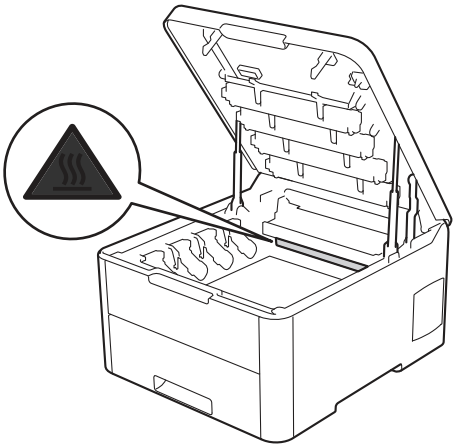

3. Remove all of the toner cartridge and drum unit assemblies.

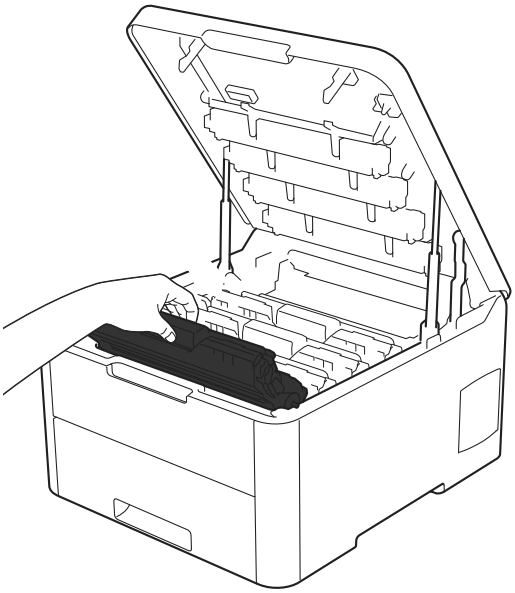

CAUTION

We recommend placing the toner cartridge and drum unit assemblies on a clean, flat surface with disposable paper underneath it in case you accidentally spill or scatter toner.

IMPORTANT

To prevent damage to the machine from static electricity, DO NOT touch the electrodes shown in the illustration.

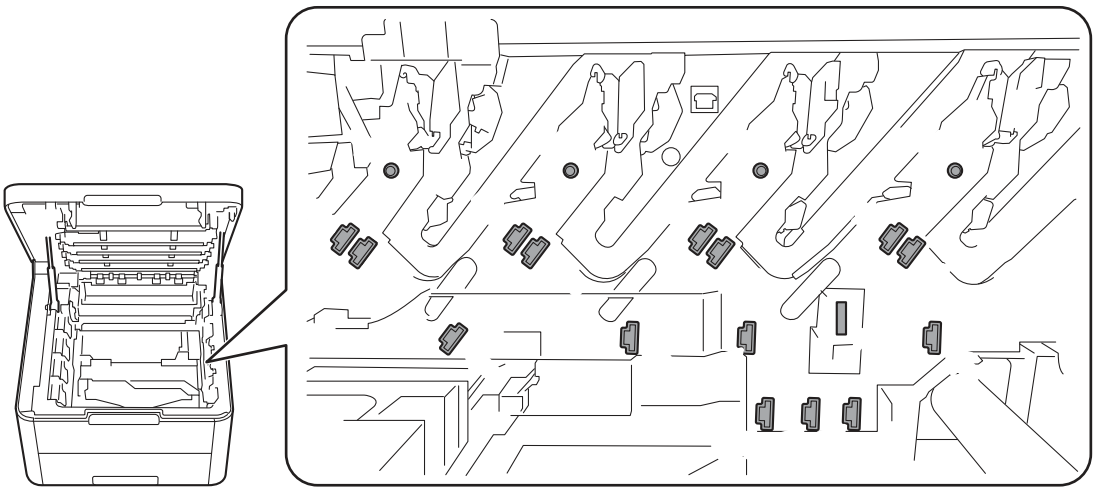

4. Hold the green handle of the belt unit and lift the belt unit up, and then pull it out without letting it touch the machine.

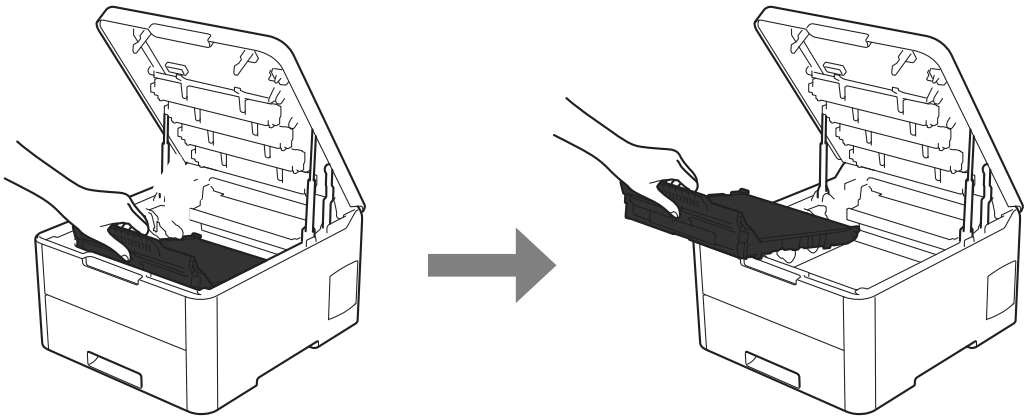

5. Unpack the new belt unit and insert it into the machine.

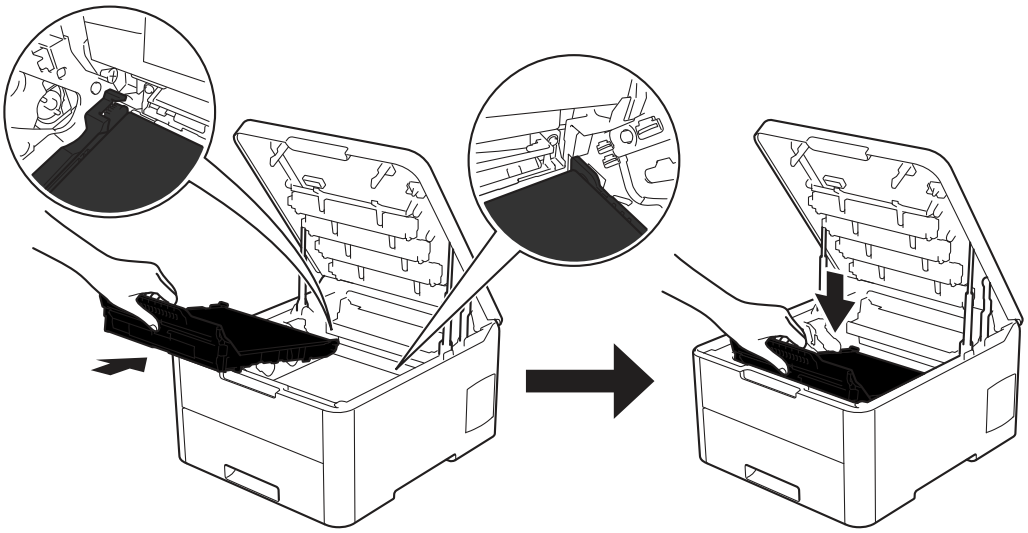

NOTE

To avoid print quality problems, DO NOT touch the shaded parts shown in the illustrations.

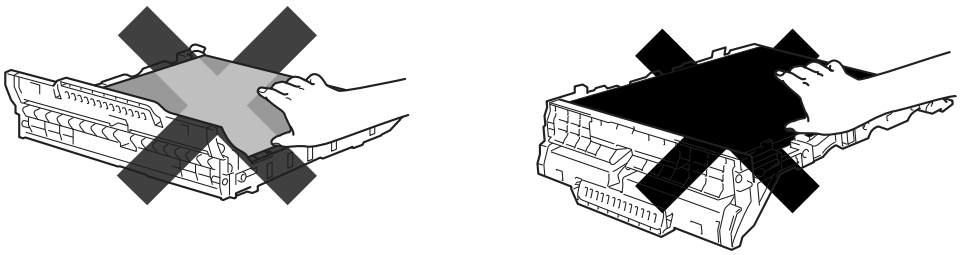

6. Reinsert each toner cartridge and drum unit assembly into the machine. Make sure that you match the toner cartridge color to the same color label on the machine for all four toner cartridge and drum unit assemblies.

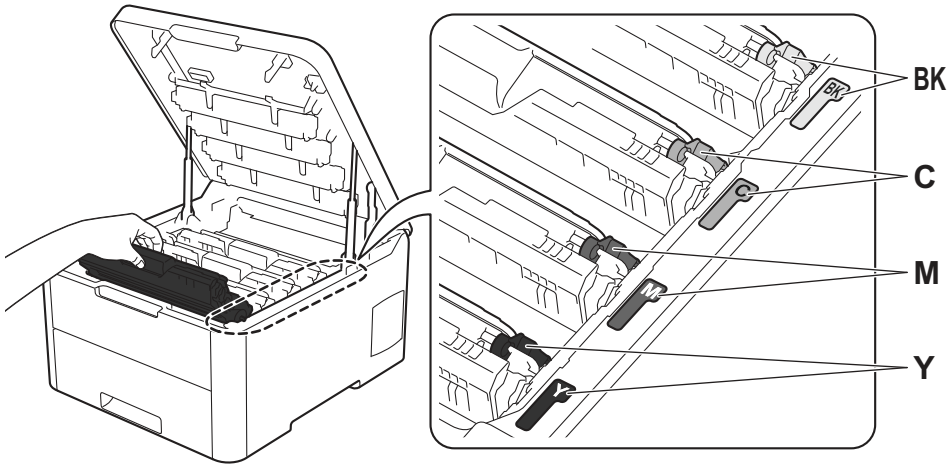

7. Close the machine's top cover.
8. Reset the belt unit counter by following the next section.

IMPORTANT

- To avoid print quality issues or damage to the machine, DO NOT reset the belt unit counter unless you are replacing the belt unit.
- Using non-genuine Brother supplies may affect the print quality, hardware performance, and machine reliability.

Reset the Belt Unit Counter (HL-L3210CW/HL-L3230CDN/HL-L3230CDW)

1. Make sure the machine is turned on.
2. Make sure the machine's cover is closed.
3. Press **OK** and ▲ at the same time.
4. Press ▲ or ▼ to display the `[Belt]` option, and then press **OK**.
5. Select `[Reset]` to reset the belt counter.

Reset the Belt Unit Counter (HL-L3270CDW)

1. Make sure the machine is turned on.
2. Press and hold for about five seconds.
3. Press `[Belt]`.
4. Press `[Yes]`.

Related Information

- Replace Supplies

Related Topics:

- Error and Maintenance Messages
- Improve the Print Quality

Replace the Waste Toner Box

Before starting the replacement procedure, see *Related Information*: *Replace Supplies*.

1. Make sure the machine is turned on.
2. Open the top cover until it locks in the open position.

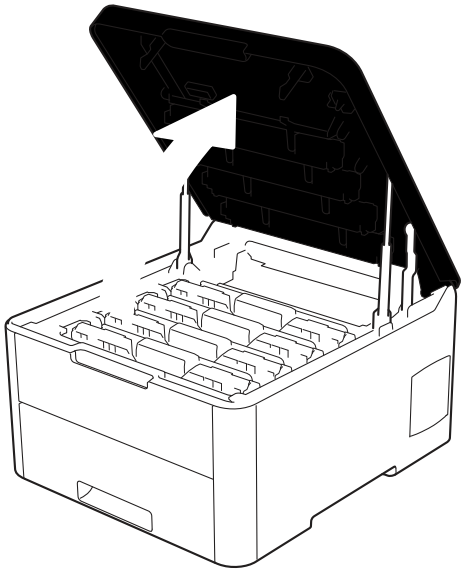

WARNING

HOT SURFACE

The machine's internal parts will be extremely hot. Wait for the machine to cool down before touching them.

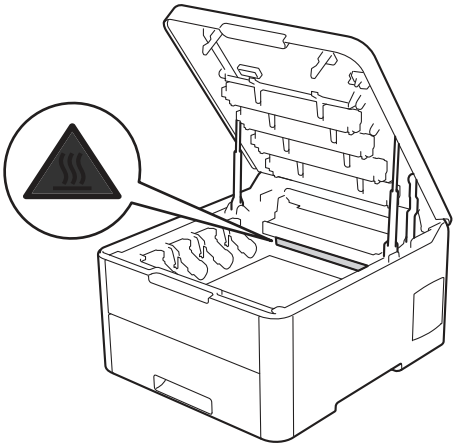

3. Remove all of the toner cartridge and drum unit assemblies.

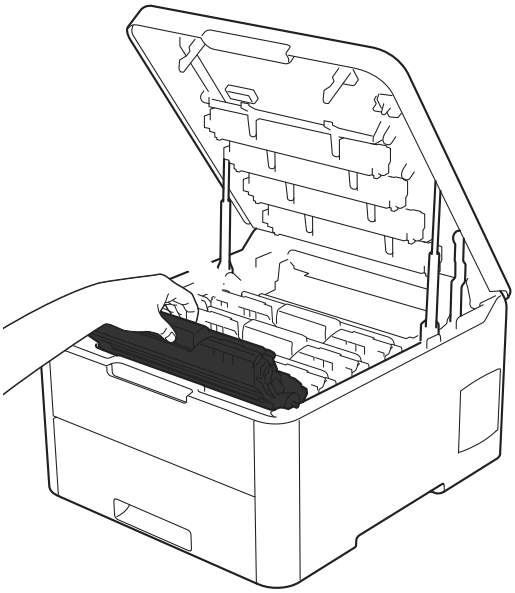

⚠ CAUTION

We recommend placing the toner cartridge and drum unit assemblies on a clean, flat surface with disposable paper underneath it in case you accidentally spill or scatter toner.

IMPORTANT

To prevent damage to the machine from static electricity, DO NOT touch the electrodes shown in the illustration.

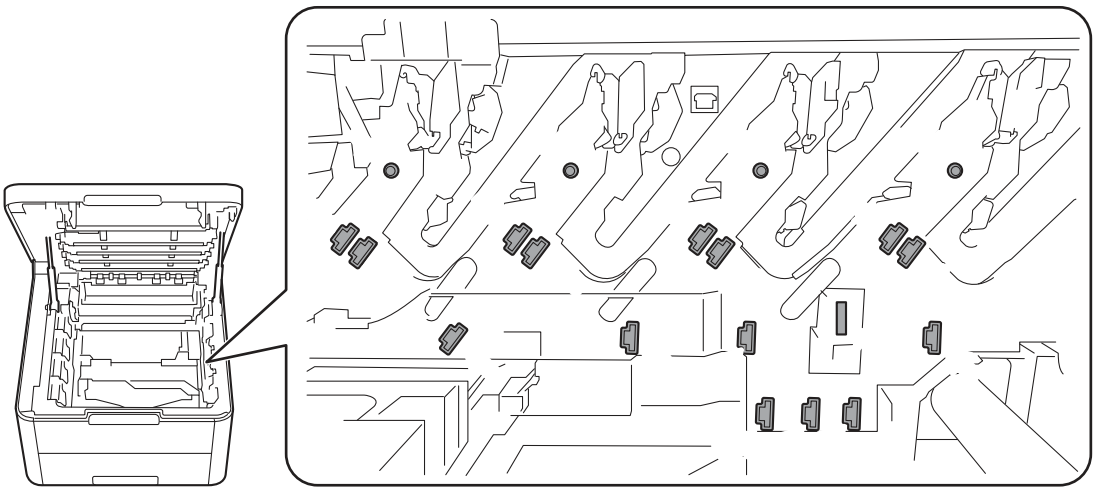

4. Hold the green handle of the belt unit and lift the belt unit up, and then pull it out without letting it touch the machine.

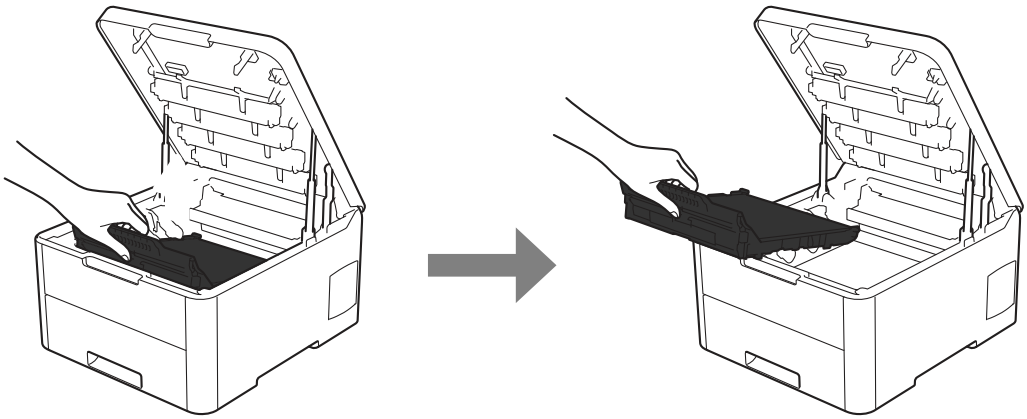

5. Remove the orange packing material and discard it.

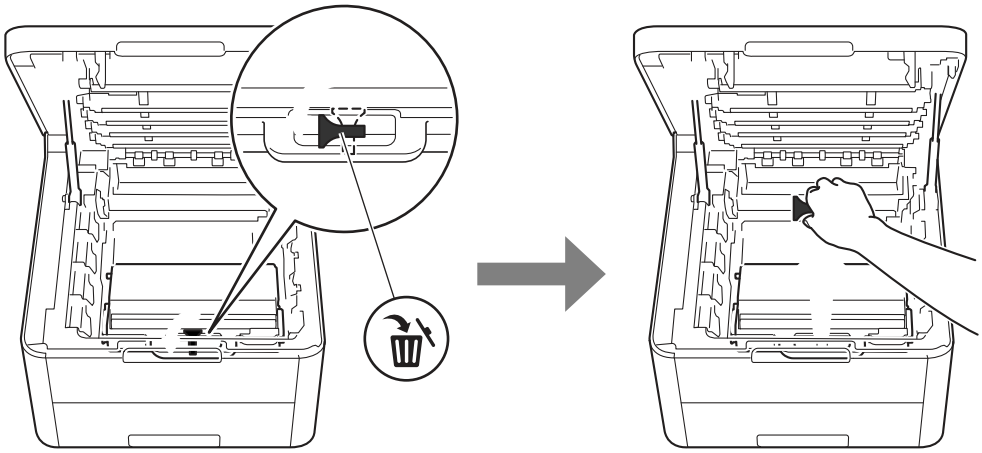

This step is only necessary when you are replacing the waste toner box for the first time, and is not required for the replacement waste toner box. The orange packing pieces are installed at the factory to protect your machine during shipment.

6. Hold the green handle of the waste toner box and remove the waste toner box from the machine.

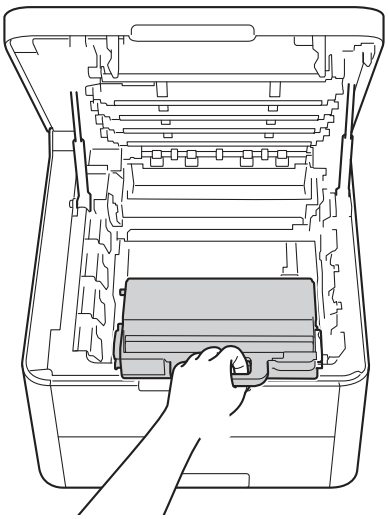

DO NOT reuse the waste toner box.

7. Unpack the new waste toner box and install the new waste toner box in the machine. Make sure the waste toner box is level and fits firmly into place.

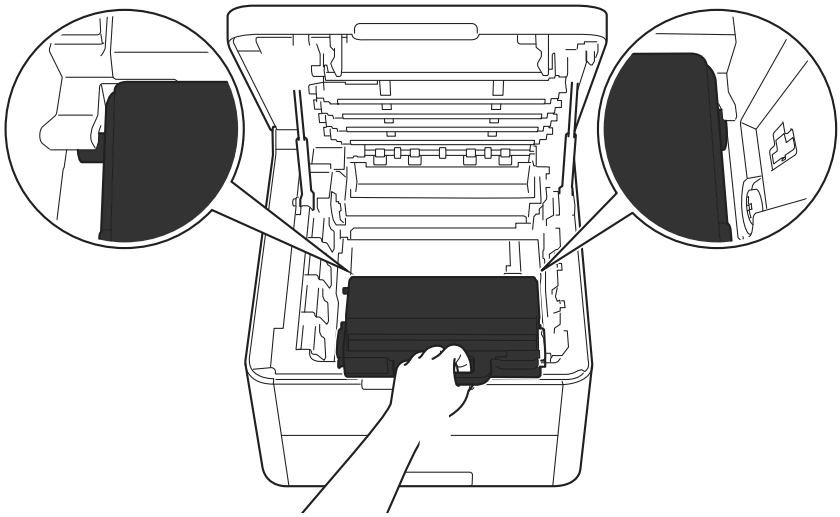

8. Reinsert the belt unit into the machine.

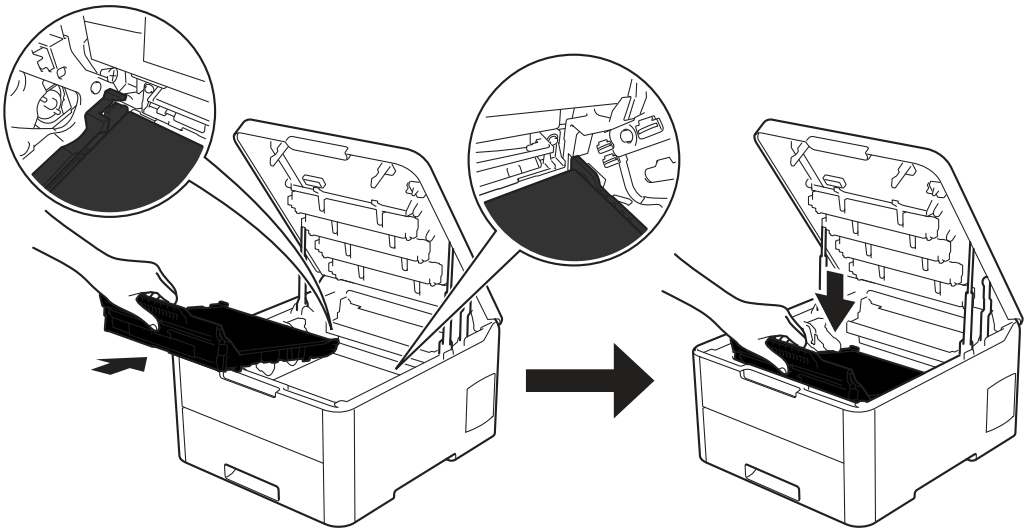

NOTE

To avoid print quality problems, DO NOT touch the shaded parts shown in the illustrations.

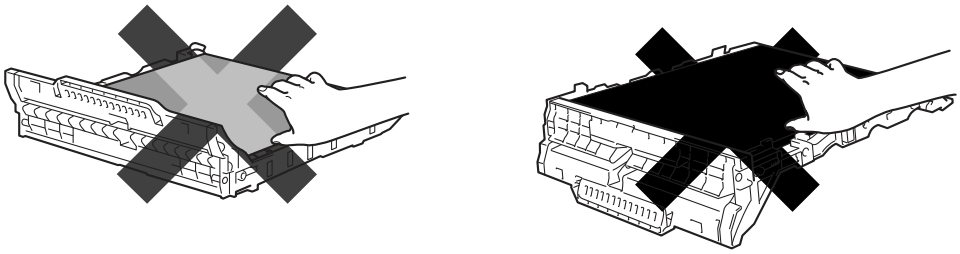

9. Reinsert each toner cartridge and drum unit assembly into the machine. Make sure that you match the toner cartridge color to the same color label on the machine for all four toner cartridge and drum unit assemblies.

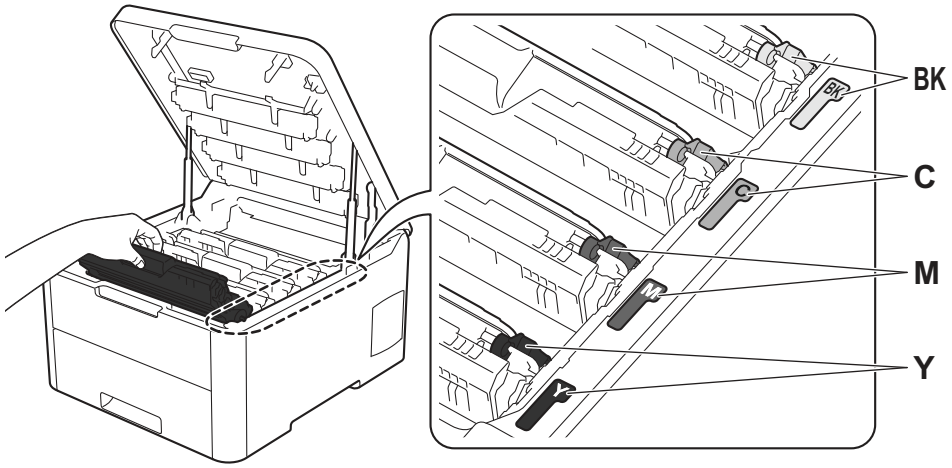

10. Close the machine's top cover.

Related Information

- Replace Supplies

Related Topics:

- Error and Maintenance Messages

Clean the Machine

Clean the outside and inside of the machine regularly with a dry, lint-free cloth.

When you replace the toner cartridge or the drum unit, make sure you clean the inside of the machine. If printed pages are stained with toner, clean the inside of the machine with a dry, lint-free cloth.

WARNING

- DO NOT use flammable substances, any type of spray, or an organic solvent/liquid containing alcohol or ammonia to clean the inside or outside of the product. Doing so could cause a fire. Instead, use only a dry, lint-free cloth.

IMPORTANT

- DO NOT use isopropyl alcohol to remove dirt from the control panel. It may crack the panel.
- To avoid print quality problems, DO NOT touch the shaded parts shown in the illustrations.

Toner Cartridge

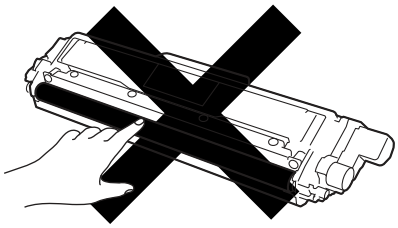

Drum Unit

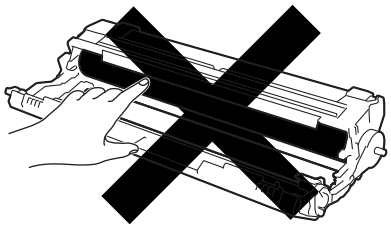

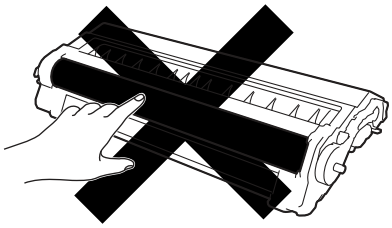

Belt Unit

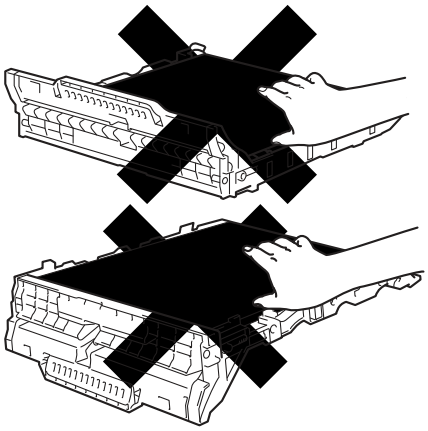

Waste Toner Box

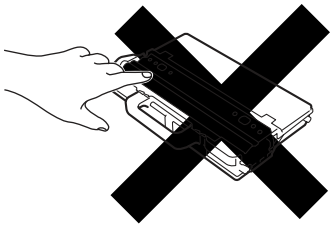

Related Information

- Routine Maintenance
  - Clean the LED Heads
  - Clean the Touchscreen LCD
  - Clean the Corona Wires
  - Clean the Drum Unit
  - Clean the Paper Pick-up Rollers

Clean the LED Heads

If there is a problem with the print quality, such as light or faded colors, white streaks, or bands that run down the page, clean the LED heads as follows:

1. Press and hold ⏻ to turn off the machine.
2. Open the top cover until it locks in the open position.

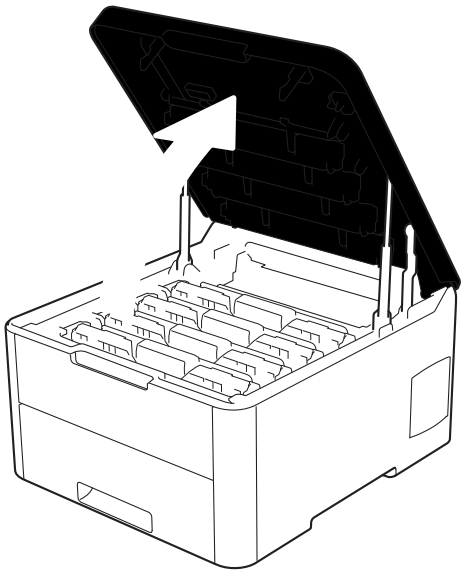

3. Wipe each LED head window (1) with a dry, soft, lint-free cloth. Do not touch the windows with your fingers.

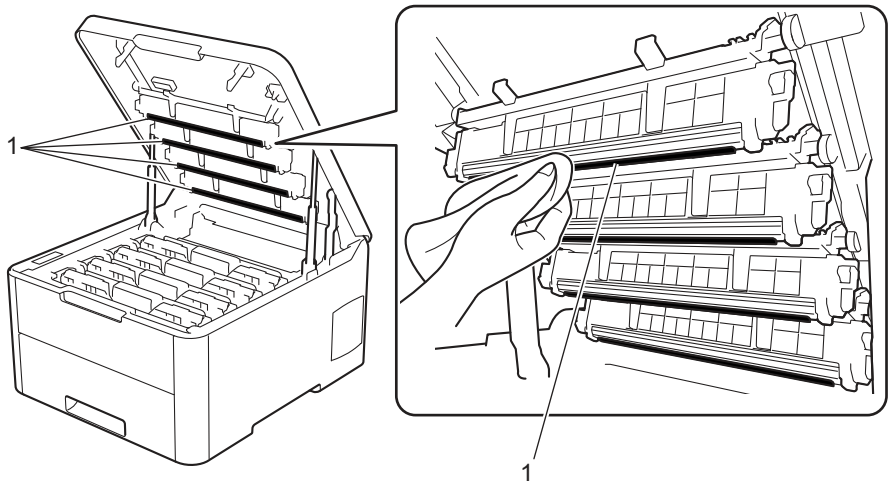

4. Close the machine's top cover.
5. Press ⏻ to turn on the machine.

Related Information

- Clean the Machine

Related Topics:

- Improve the Print Quality

Clean the Touchscreen LCD

Related Models: HL-L3270CDW

IMPORTANT

DO NOT use any type of liquid cleaners (including ethanol).

1. Press and hold ⏻ to turn off the machine.
2. Clean the touchscreen with a dry, soft lint-free cloth.

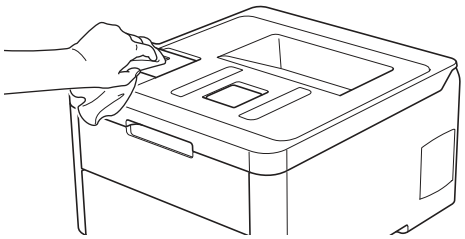

3. Press ⏻ to turn on the machine.

Related Information

- Clean the Machine

Clean the Corona Wires

1. Open the top cover until it locks in the open position.

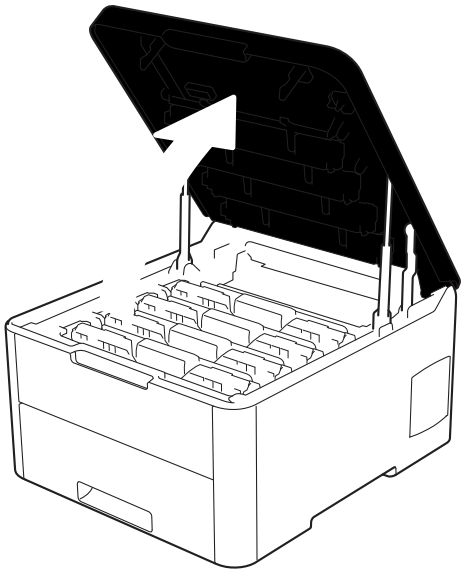

WARNING

HOT SURFACE

The machine's internal parts will be extremely hot. Wait for the machine to cool down before touching them.

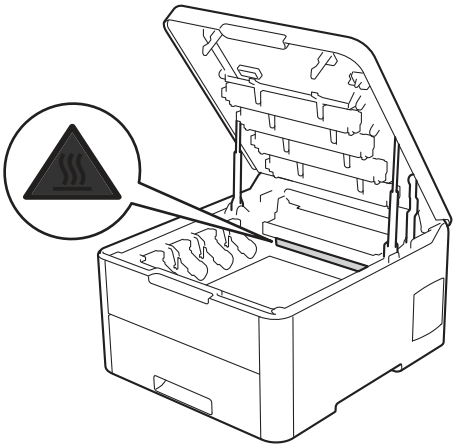

2. Remove the toner cartridge and drum unit assemblies.

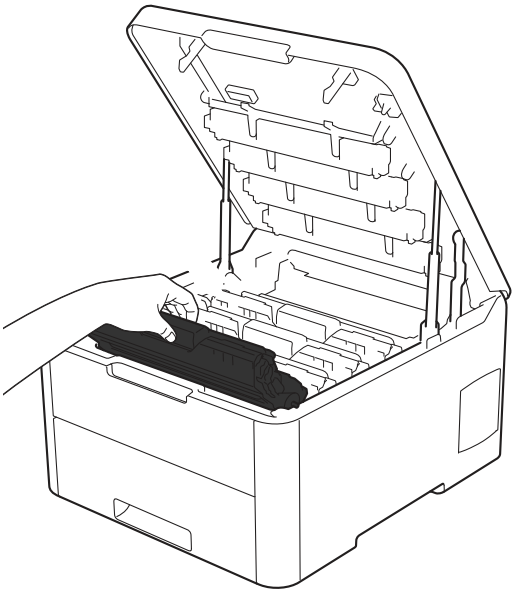

⚠ CAUTION

We recommend placing the toner cartridge and drum unit assemblies on a clean, flat surface with disposable paper underneath it in case you accidentally spill or scatter toner.

IMPORTANT

To prevent damage to the machine from static electricity, DO NOT touch the electrodes shown in the illustration.

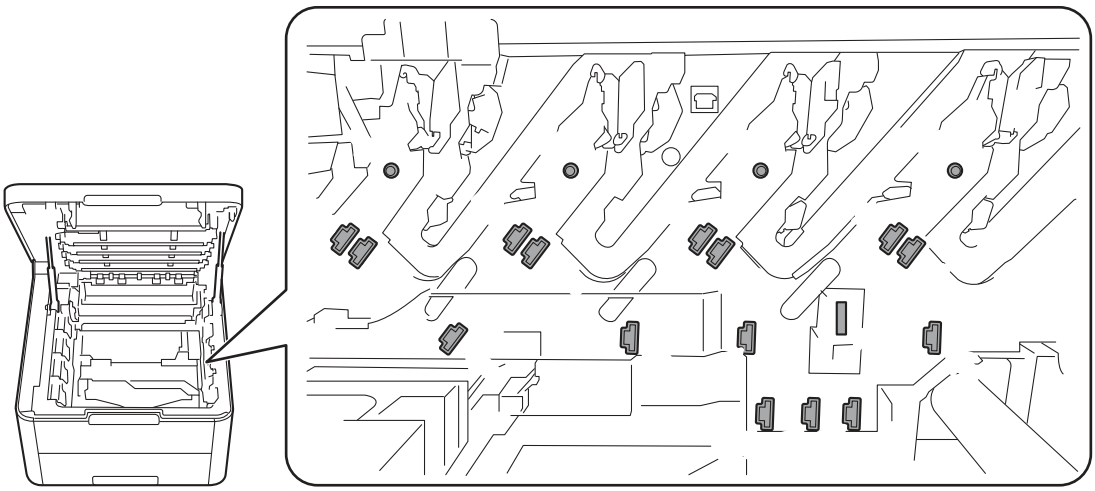

3. Clean the corona wire inside the drum unit by gently sliding the green tab from left to right and right to left several times. Repeat this for all the corona wires.

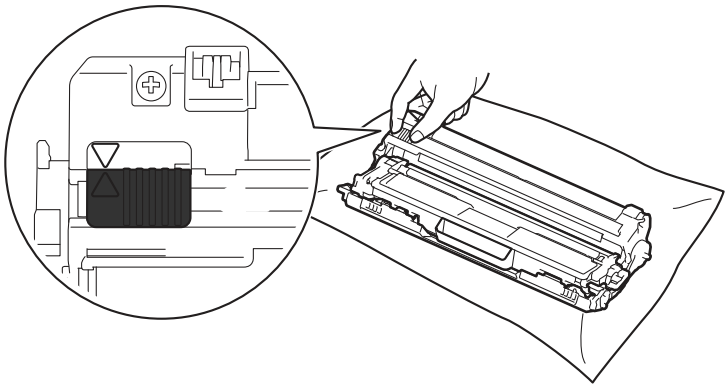

Be sure to return the green tab to the Home position (▲). The arrow on the tab must be aligned with the arrow on the drum unit. If it is not, printed pages may have a vertical stripe.

4. Slide the toner cartridge and drum unit assemblies into the machine. Make sure that you match the toner cartridge color to the same color label on the machine.

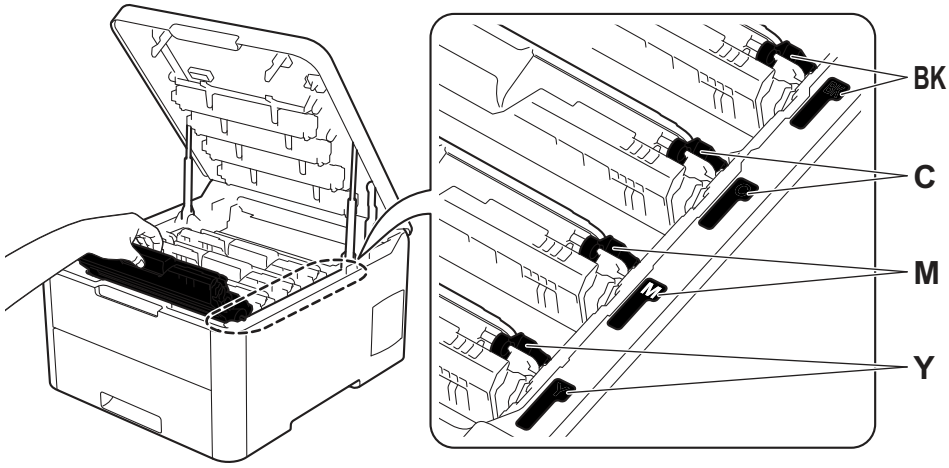

5. Close the machine's top cover.

Related Information

- Clean the Machine

Related Topics:

- Error and Maintenance Messages

Clean the Drum Unit

If your printout has black or white dots or other repeating marks at 3.7 in. (94 mm) intervals, the drum may have foreign material, such as glue from a label, stuck on the drum surface.

>> HL-L3210CW/HL-L3230CDN/HL-L3230CDW
>> HL-L3270CDW

HL-L3210CW/HL-L3230CDN/HL-L3230CDW

1. Make sure the machine is in Ready Mode.
2. Press ▲ or ▼ to display the `[Print Reports]` option, and then press **OK**.
3. Press ▲ or ▼ to select the `[Drum Dot Print]` option, and then press **OK**.
4. Press **Go**.

   The machine prints the Drum Dot Check Sheet.
5. Press and hold ⏻ to turn off the machine.
6. Open the top cover until it locks in the open position.

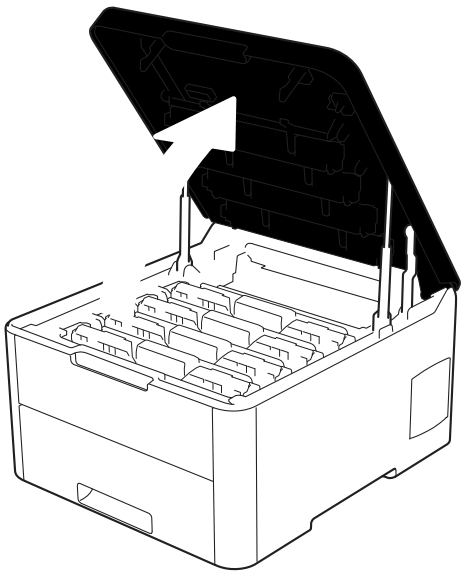

⚠ WARNING

HOT SURFACE

The machine's internal parts will be extremely hot. Wait for the machine to cool down before touching them.

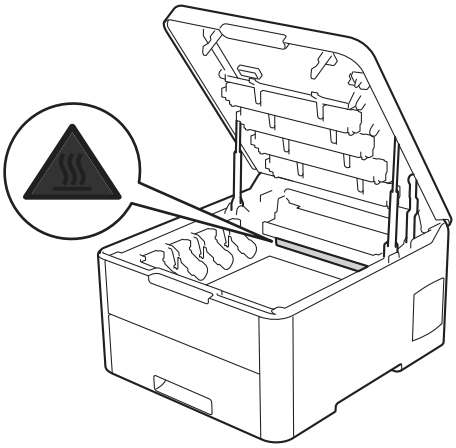

7. The color of printed dots on the Drum Dot Check Sheet is the color of the drum you should clean. Remove the toner cartridge and drum unit assembly that matches the color causing the problem.

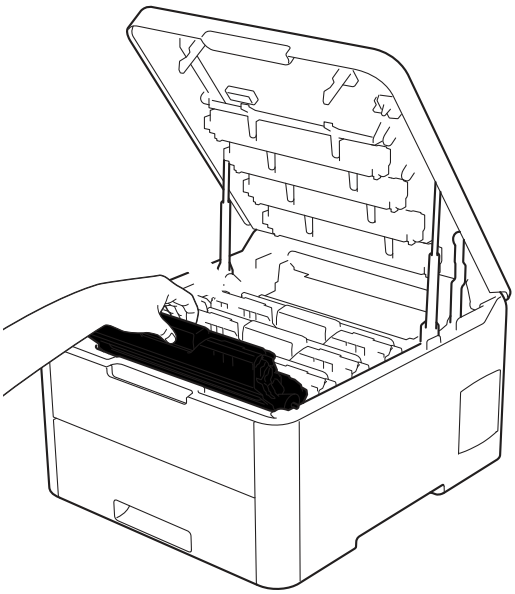

CAUTION

We recommend placing the toner cartridge and drum unit assemblies on a clean, flat surface with disposable paper underneath it in case you accidentally spill or scatter toner.

IMPORTANT

To prevent damage to the machine from static electricity, DO NOT touch the electrodes shown in the illustration.

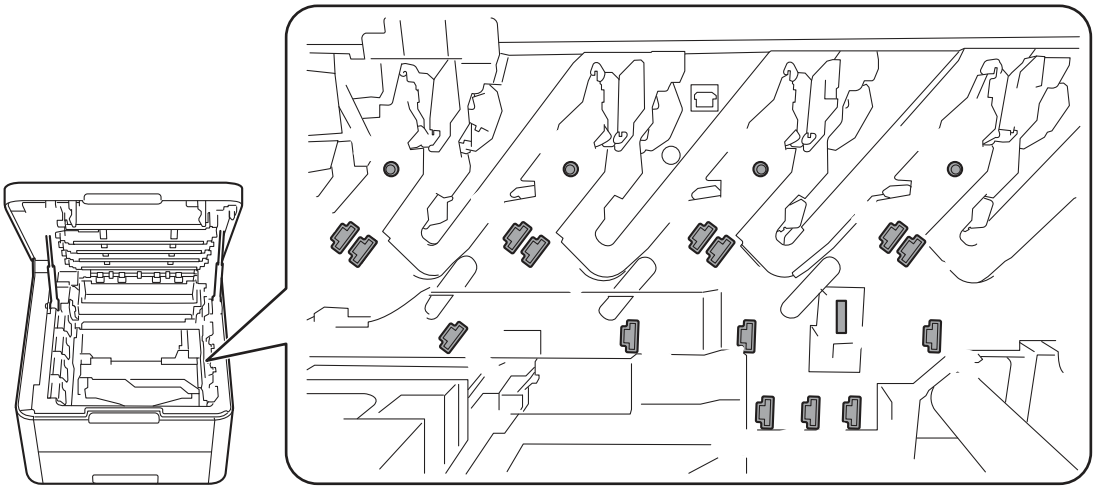

8. Push down the green lock lever and remove the toner cartridge from the drum unit.

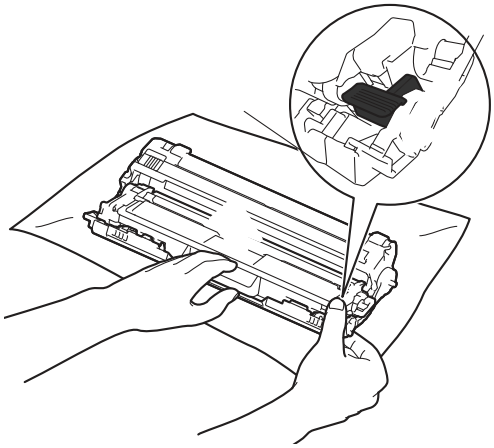

To avoid print quality problems, DO NOT touch any surface of the drum unit except the drum unit gear.

9. Lift the drum unit frame by the handle and rotate it counterclockwise, as shown.

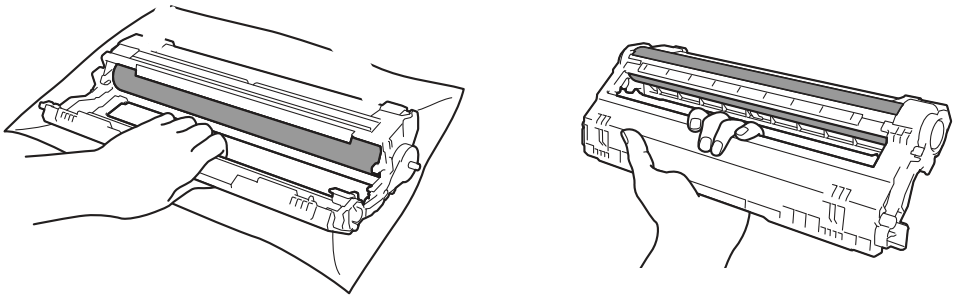

10. Loosen your grip so the frame drops forward, and then use your right hand to locate the drum unit gear inside the right side of the frame.

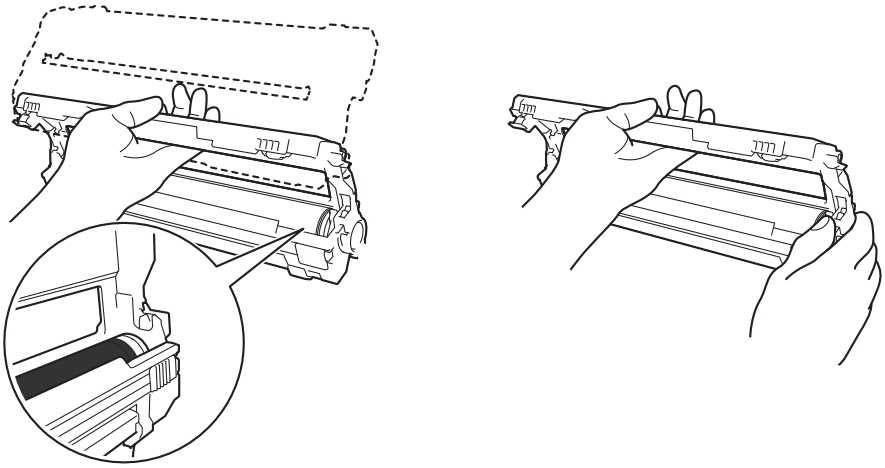

To avoid print quality problems, DO NOT touch any surface of the drum unit except the drum unit gear.

11. Tilt your left hand up to lift the frame so the numbered grid is visible, as shown. Use your right hand to rotate the drum while you look for marks or debris on the drum surface.

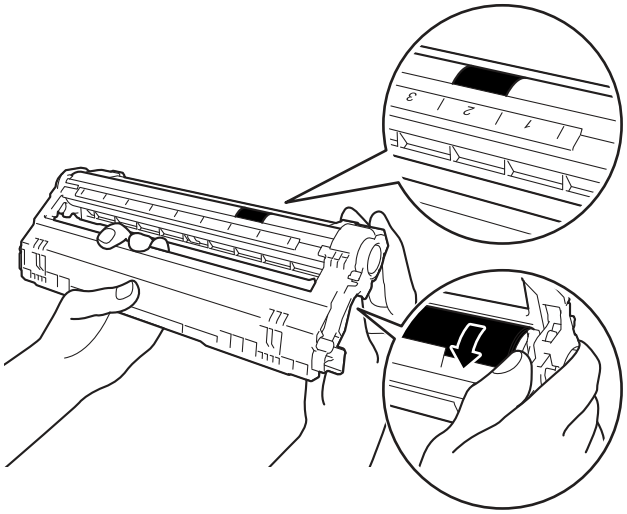

Use the column numbers next to the drum roller to find the mark. For example, a dot in column 2 on the Drum Dot Check Sheet would mean that there is a mark in the “2” region of the drum.

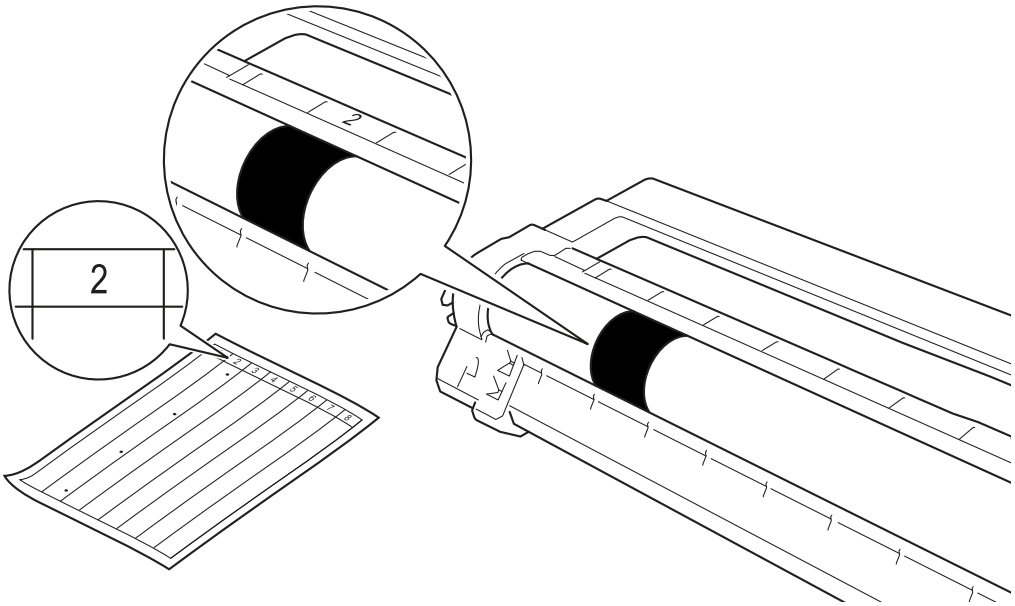

12. Wipe the surface of the drum gently with a dry cotton swab until the mark on the surface comes off.

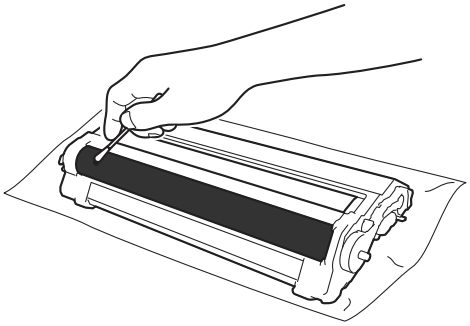

NOTE

DO NOT clean the surface of the photosensitive drum with a sharp object or any liquids.

13. Reinsert the toner cartridge firmly into the drum unit until you hear it lock into place.

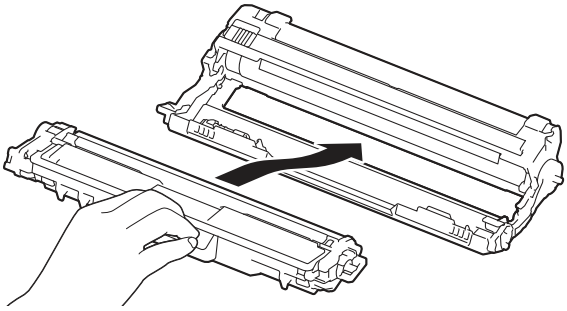

Make sure you put the toner cartridge in correctly or it may separate from the drum unit.

14. Slide the toner cartridge and drum unit assemblies into the machine. Make sure that you match the toner cartridge color to the same color label on the machine.

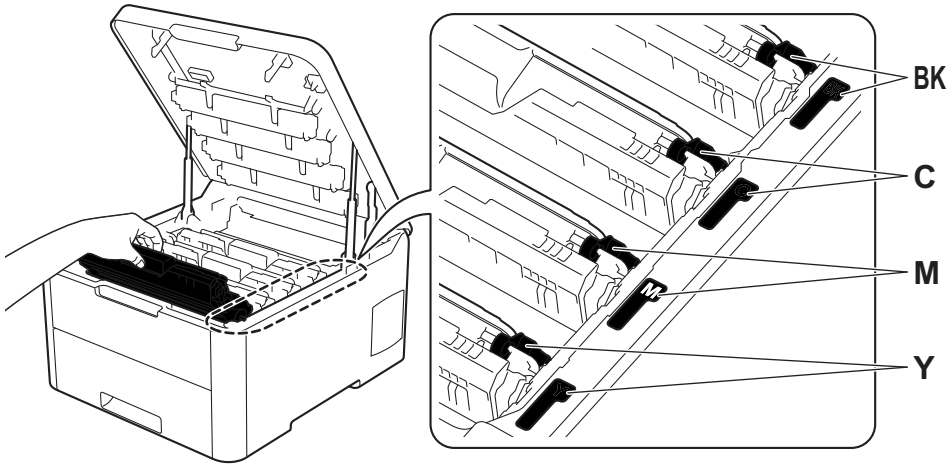

15. Close the machine's top cover.
16. Press ⏻ to turn on the machine.

HL-L3270CDW

1. Make sure the machine is in Ready Mode.
2. Press [Settings] > [All Settings] > [Print Reports] > [Drum Dot Print].
3. Press [Yes].

   The machine prints the Drum Dot Check Sheet.
4. Press and hold ⏻ to turn off the machine.

5. Open the top cover until it locks in the open position.

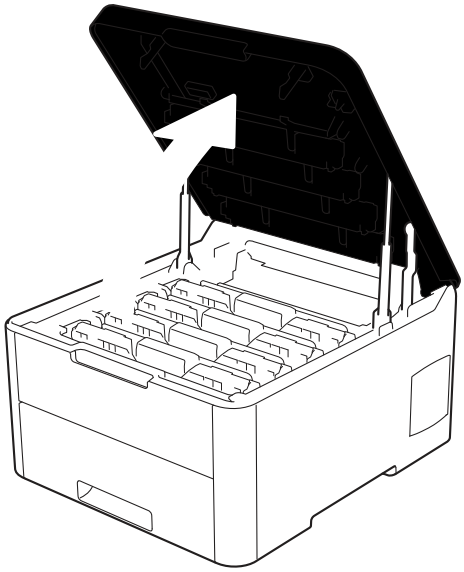

WARNING

HOT SURFACE

The machine's internal parts will be extremely hot. Wait for the machine to cool down before touching them.

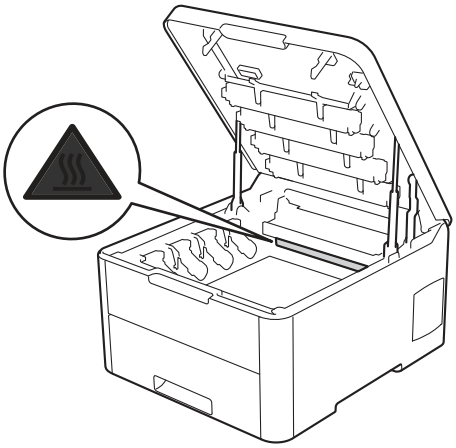

6. The color of printed dots on the Drum Dot Check Sheet is the color of the drum you should clean. Remove the toner cartridge and drum unit assembly that matches the color causing the problem.

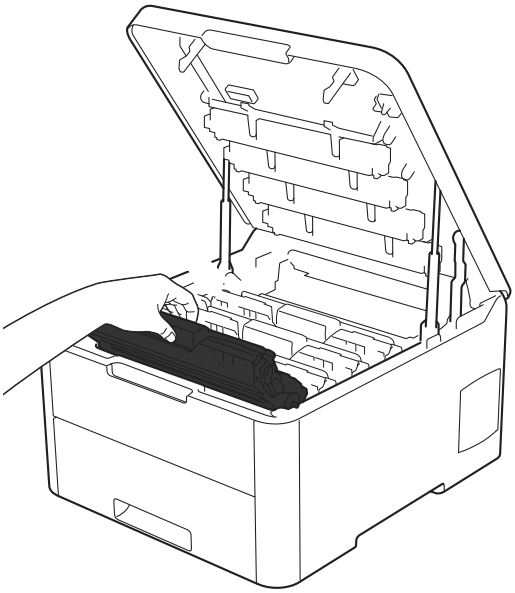

⚠ CAUTION

We recommend placing the toner cartridge and drum unit assemblies on a clean, flat surface with disposable paper underneath it in case you accidentally spill or scatter toner.

IMPORTANT

To prevent damage to the machine from static electricity, DO NOT touch the electrodes shown in the illustration.

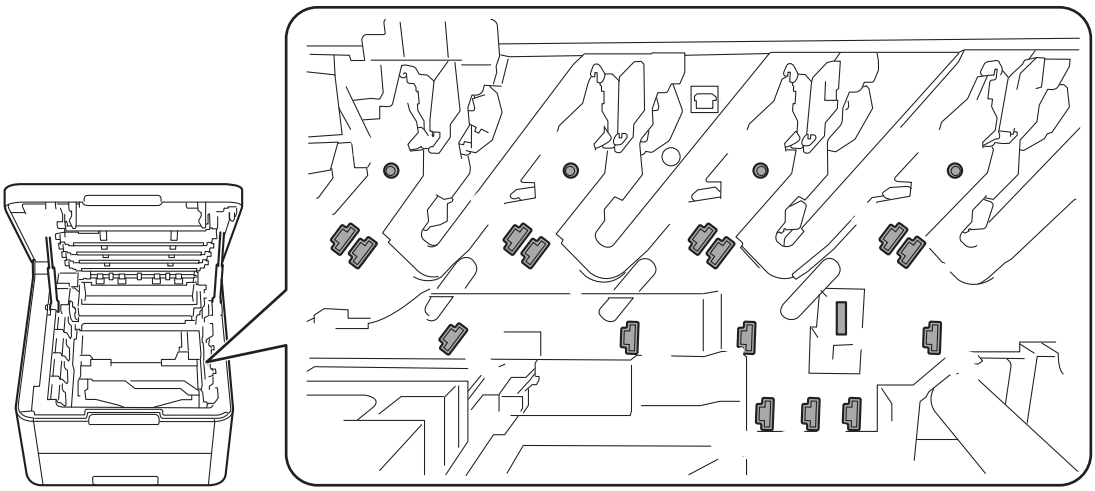

7. Push down the green lock lever and remove the toner cartridge from the drum unit.

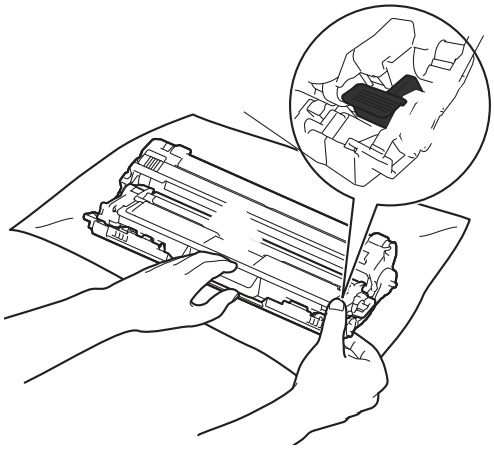

To avoid print quality problems, DO NOT touch any surface of the drum unit except the drum unit gear.

8. Lift the drum unit frame by the handle and rotate it counterclockwise, as shown.

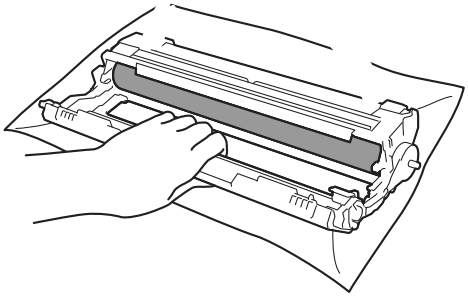

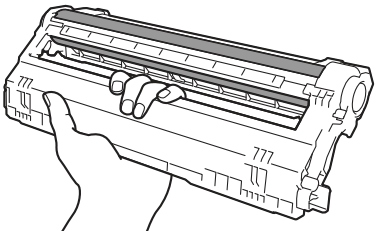

9. Loosen your grip so the frame drops forward, and then use your right hand to locate the drum unit gear inside the right side of the frame.

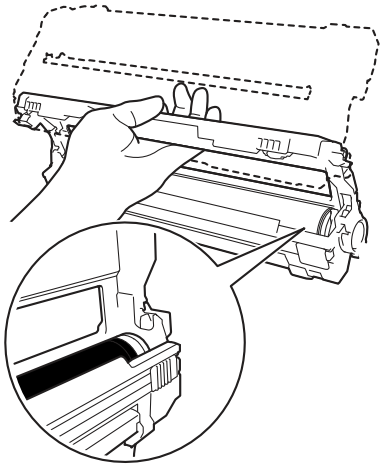

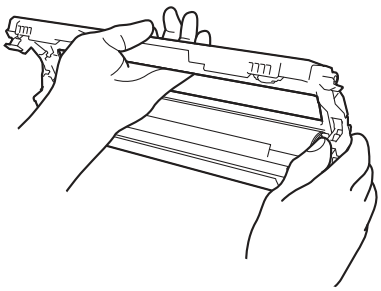

To avoid print quality problems, DO NOT touch any surface of the drum unit except the drum unit gear.

10. Tilt your left hand up to lift the frame so the numbered grid is visible, as shown. Use your right hand to rotate the drum while you look for marks or debris on the drum surface.

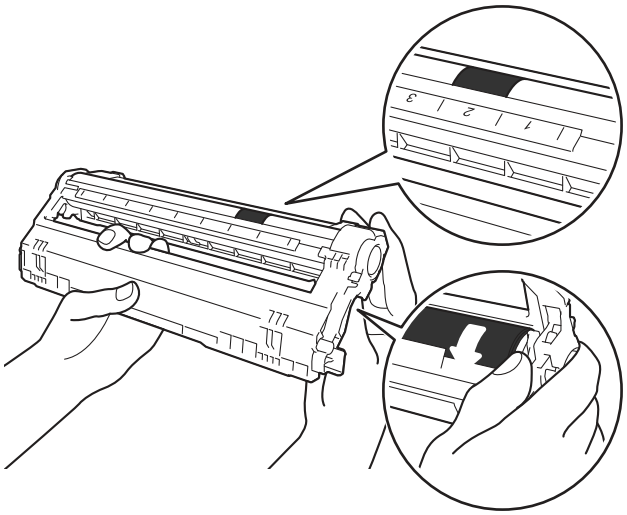

Use the column numbers next to the drum roller to find the mark. For example, a dot in column 2 on the Drum Dot Check Sheet would mean that there is a mark in the “2” region of the drum.

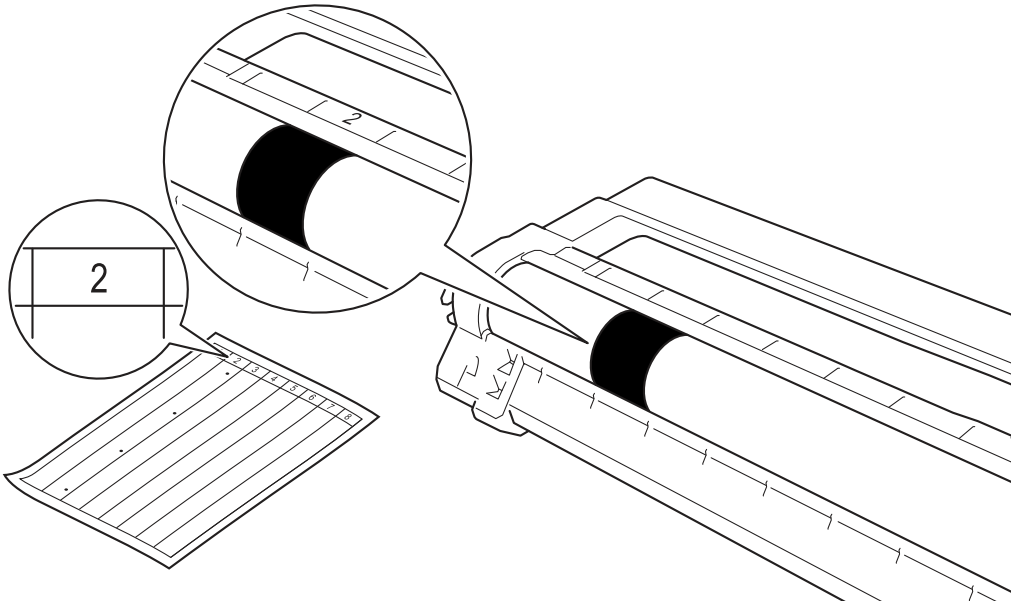

11. Wipe the surface of the drum gently with a dry cotton swab until the mark on the surface comes off.

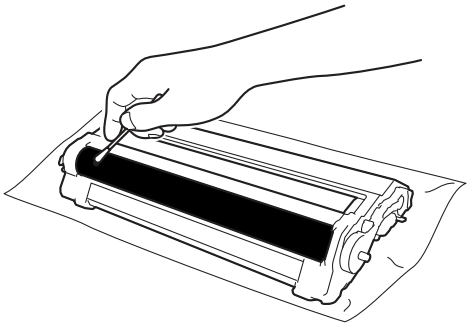

NOTE

DO NOT clean the surface of the photosensitive drum with a sharp object or any liquids.

12. Reinsert the toner cartridge firmly into the drum unit until you hear it lock into place.

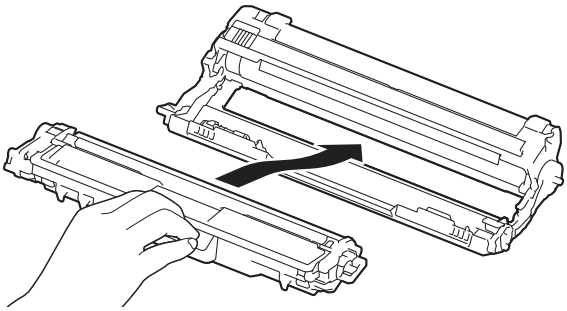

Make sure you put the toner cartridge in correctly or it may separate from the drum unit.

13. Slide the toner cartridge and drum unit assemblies into the machine. Make sure that you match the toner cartridge color to the same color label on the machine.

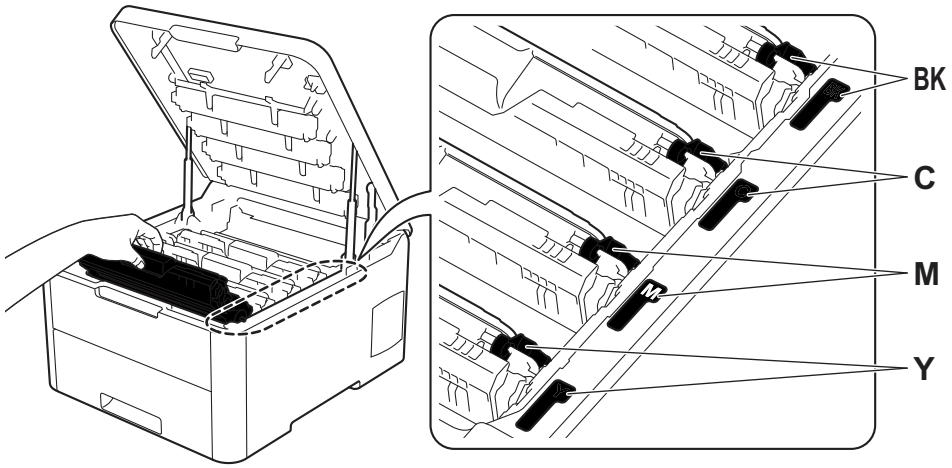

14. Close the machine's top cover.
15. Press ⏻ to turn on the machine.

Related Information

- Clean the Machine

Related Topics:

- Improve the Print Quality

Clean the Paper Pick-up Rollers

Cleaning the paper pick-up rollers periodically may prevent paper jams by ensuring that paper feeds correctly.

If you have paper feed problems, clean the pick-up rollers as follows:

1. Press and hold ⏻ to turn off the machine.
2. Pull the paper tray completely out of the machine.

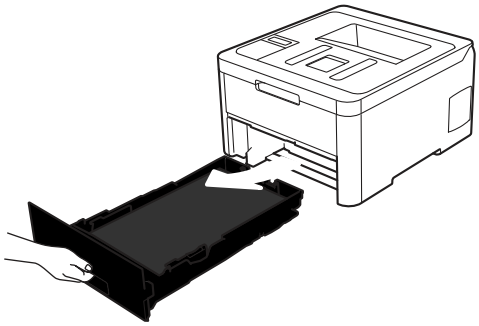

3. If paper is loaded or something is stuck inside in the paper tray, remove it.
4. Tightly wring out a lint-free cloth soaked in lukewarm water, and then wipe the separator pad on the paper tray to remove dust.

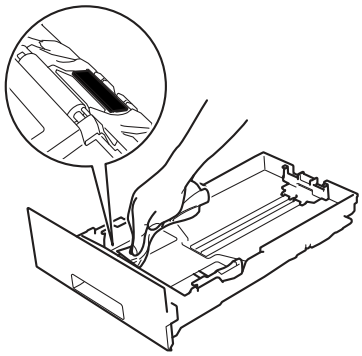

5. Wipe the two pick-up rollers inside the machine to remove dust.

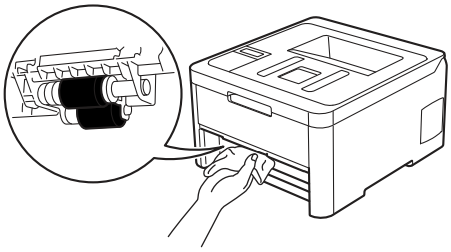

6. Reload the paper and put the paper tray firmly back in the machine.
7. Press ⏻ to turn on the machine.

Related Information

- Clean the Machine

Related Topics:

- Printing Problems

Calibrate Color Output

The output density for each color may vary depending on the machine's environment, including factors like temperature and humidity. Calibrating your machine helps improve the output color density.

If you are using the Mac printer driver, the printer driver automatically retrieves the calibration data. To retrieve the data manually, you must perform the calibration using Brother's **Status Monitor**.

>> HL-L3210CW/HL-L3230CDN/HL-L3230CDW
>> HL-L3270CDW

HL-L3210CW/HL-L3230CDN/HL-L3230CDW

1. Press ▲ or ▼ to select the [Printer] option, and then press **OK**.
2. Press ▲ or ▼ to display the [Color Correction] option, and then press **OK**.
3. Press ▲ or ▼ to display the [Calibration] option, and then press **OK**.
4. Press ▲ or ▼ to display the [Calibrate] option, and then press **OK**.
5. Press ▲ to select [Yes].

Calibration starts automatically, and will take a few minutes.

6. Press **Cancel**.

HL-L3270CDW

1. Press [Toner] > [Calibration] > [Calibrate].
2. Press [Yes].

Calibration starts automatically, and will take a few minutes.

3. Press .

Related Information

- Routine Maintenance
  - Reset the Machine's Calibration Settings

Related Topics:

- Error and Maintenance Messages
- Improve the Print Quality
- Monitor the Status of the Machine from Your Computer (Windows)
- Monitor the Status of the Machine from Your Computer (Mac)

Reset the Machine's Calibration Settings

If the output color differs from what you see on your monitor, try resetting your machine's calibration parameters.

>> HL-L3210CW/HL-L3230CDN/HL-L3230CDW
>> HL-L3270CDW

HL-L3210CW/HL-L3230CDN/HL-L3230CDW

1. Press ▲ or ▼ to select the [Printer] option, and then press **OK**.
2. Press ▲ or ▼ to display the [Color Correction] option, and then press **OK**.
3. Press ▲ or ▼ to display the [Calibration] option, and then press **OK**.
4. Press ▲ or ▼ to display the [Reset] option, and then press **OK**.
5. Press ▲ to select [Reset].
6. Press **Cancel**.

HL-L3270CDW

1. Press [Toner] > [Calibration] > [Reset].
2. Press [Yes].
3. Press .

Related Information

- Calibrate Color Output

Correct Color Print Alignment (Color Registration)

If solid areas of color or images have cyan, magenta or yellow fringes, use the Color Registration function.

>> HL-L3210CW/HL-L3230CDN/HL-L3230CDW
>> HL-L3270CDW

HL-L3210CW/HL-L3230CDN/HL-L3230CDW

1. Press ▲ or ▼ to select the [Printer] option, and then press **OK**.
2. Press ▲ or ▼ to display the [Color Correction] option, and then press **OK**.
3. Press ▲ or ▼ to display the [Registration] option, and then press **OK**.
4. Press ▲ to select [Yes].

Color registration starts automatically, and will take around 10 seconds or more.

5. Press **Cancel**.

HL-L3270CDW

1. Press [Toner] > [Registration].
2. Press [Yes].

Color registration starts automatically, and will take around 10 seconds or more.

3. Press .

Related Information

- Routine Maintenance

Check the Remaining Part Life

>> HL-L3210CW/HL-L3230CDN/HL-L3230CDW
>> HL-L3270CDW

HL-L3210CW/HL-L3230CDN/HL-L3230CDW

1. Press ▲ or ▼ to select the [Machine Info.] option, and then press **OK**.
2. Press ▲ or ▼ to display the [Parts Life] option, and then press **OK**.
3. Press ▲ or ▼ to select the machine part you want to check, and then press **OK**.
   The LCD displays the approximate remaining part life.
4. Press **Cancel**.

HL-L3270CDW

1. Press [Settings] > [All Settings] > [Machine Information] > [Parts Life].
2. Press ▲ or ▼ to display the machine parts, and then press the machine part you want to check.
   The LCD displays the approximate remaining part life.
3. Press .

To display the approximate remaining life of toner cartridges, press [Toner] > [Toner Life].

Related Information

- Routine Maintenance

Pack and Ship Your Brother Machine

WARNING

- When you move the machine, carry the machine as shown in the illustration.

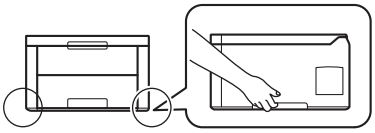

- If for any reason you must ship your machine, carefully repack the machine in the original packaging to avoid any damage during transit. The machine should be adequately insured with the carrier.
- Unless you are returning the machine as part of the Brother Exchange Service, leave the toner cartridge and drum unit inside the machine when you pack and ship it.

1. Press and hold ⏻ to turn off the machine. Leave the machine off for at least 10 minutes to cool down.
2. Disconnect all the cables, and then unplug the power cord from the AC power outlet.
3. Put the machine into the bag it originally came in.
4. Pack the machine, the printed materials, and the AC power cord (if applicable) in the original carton with the original packing material as shown. If you are returning your machine to Brother as part of the Exchange Service, pack only the machine. Keep all separate parts and printed materials to use with your "Exchange" machine.

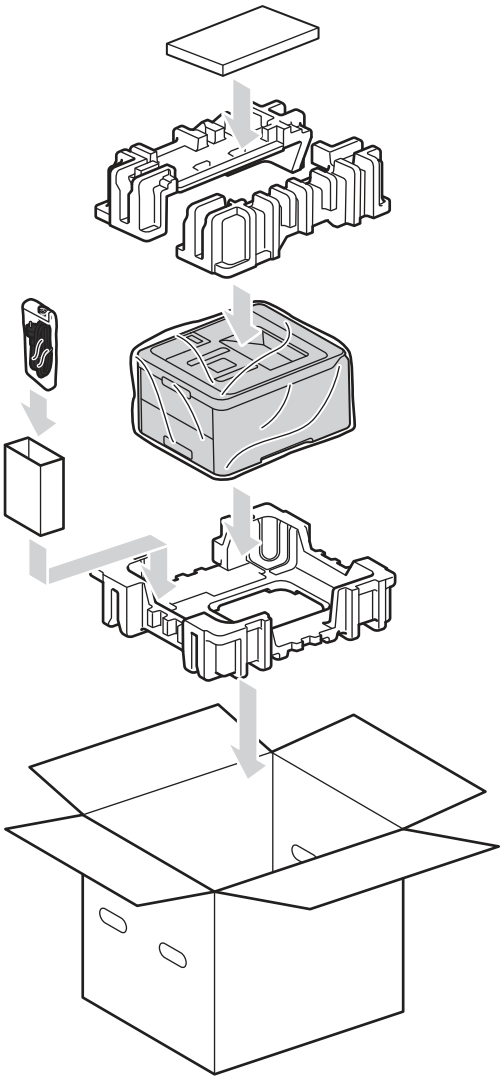

5. Close the carton and tape it shut.

Related Information

- Routine Maintenance

Replace Periodic Maintenance Parts

Replace the following parts regularly to maintain print quality. The parts listed below must be replaced after printing approximately 50,000 pages [1] for the Fuser Unit and the PF Kit for the Paper Tray.

Contact Brother Customer Service or a Brother Authorized Service Center when the following message appears on the LCD:

LCD Message	Description
`Replace Fuser` [2]	Replace the Fuser Unit.
`Replace PF Kit1` [2]	Replace the Paper Feeding Kit for the Paper Tray.

Related Information

- Routine Maintenance

[1] Letter or A4 size single-sided pages

[2] Replacement frequency depends on the complexity of printed pages, percentage of coverage, and the type of media used.

Machine Settings

Customize settings and features, create shortcuts, and work with options displayed on the machine's LCD to make your Brother machine a more efficient work tool.

- Change Machine Settings from the Control Panel
- Change Machine Settings from Your Computer

Change Machine Settings from the Control Panel

- General Settings
- Settings and Features Tables

General Settings

- Set Sleep Mode Countdown
- About Deep Sleep Mode
- Set Auto Power Off Mode
- Adjust the LCD Backlight Brightness
- Change How Long the LCD Backlight Stays On
- Reduce Toner Consumption
- Reduce Printing Noise
- Change the Language on the LCD

Set Sleep Mode Countdown

The Sleep Mode (or Power Save Mode) setting can reduce power consumption. Select how long the machine must be idle before it goes into Sleep Mode. The Sleep Mode timer is reset when the machine receives a print job.

When the machine is in Sleep Mode, it acts as if it is turned off. The machine will wake up and start printing when it receives a print job. Use these instructions to set a time delay (countdown) before the machine enters Sleep Mode.

>> HL-L3210CW/HL-L3230CDN/HL-L3230CDW
>> HL-L3270CDW

HL-L3210CW/HL-L3230CDN/HL-L3230CDW

1. Press ▲ or ▼ to select the [General Setup] option, and then press **OK**.
2. Press ▲ or ▼ to select the [Ecology] option, and then press **OK**.
3. Press ▲ or ▼ to select the [Sleep Time] option, and then press **OK**.
4. Press ▲ or ▼ to enter the length of time, in minutes, that the machine should remain idle before entering Sleep Mode.

   Press **Go**.

HL-L3270CDW

1. Press [Settings] > [All Settings] > [General Setup] > [Ecology] > [Sleep Time].
2. Enter the length of time (maximum 50 minutes) the machine will remain idle before entering Sleep Mode, and then press [OK].
3. Press .

Related Information

- General Settings

About Deep Sleep Mode

If the machine is in Sleep mode and does not receive any jobs for certain length of time, the machine will automatically enter Deep Sleep mode. The length of time is based on your specific model and settings.

Deep Sleep mode uses less power than Sleep mode.

Applicable Models	Machine's Control Panel in Deep Sleep Mode	Conditions That Will Wake the Machine
HL-L3210CW/HL-L3230CDN/ HL-L3230CDW	The LCD displays `Deep Sleep`.	• The machine receives a job. • Someone presses a button on the control panel.
HL-L3270CDW	The LCD backlight turns off and the Power LED brightens and dims.	• The machine receives a job. • Someone presses , or the touchscreen LCD.

Related Information

- General Settings

Set Auto Power Off Mode

If the machine is in Deep Sleep Mode for certain length of time, based on your model and settings, the machine will go into Power Off Mode automatically. The machine does not go into Power Off Mode when the machine is connected to a network or a telephone line , or has secure print data in the memory(Available only for certain models).

- To start printing, press on the control panel and then send a print job.

>> HL-L3210CW/HL-L3230CDN/HL-L3230CDW
>> HL-L3270CDW

HL-L3210CW/HL-L3230CDN/HL-L3230CDW

Select how long the machine must be in Deep Sleep Mode before it goes into Auto Power Off Mode.

1. Press ▲ or ▼ to display the [General Setup] option, and then press **OK**.
2. Press ▲ or ▼ to display the [Ecology] option, and then press **OK**.
3. Press ▲ or ▼ to select the [Auto Power Off] option, and then press **OK**.
4. Press ▲ or ▼ to select the option you want, and then press **Go**.

HL-L3270CDW

1. Press [Settings] > [All Settings] > [General Setup] > [Ecology] > [Auto Power Off].
2. Press ▲ or ▼ to display the length of time the machine will remain idle before entering Power Off Mode, and then press the option you want.
3. Press .

Related Information

- General Settings

Adjust the LCD Backlight Brightness

Related Models: HL-L3270CDW

If you are having difficulty reading the LCD, changing the brightness setting may help.

1. Press [Settings] > [All Settings] > [General Setup] > [LCD Settings] > [Backlight].
2. Press the option you want:
   - [Light]
   - [Med]
   - [Dark]
3. Press .

Related Information

- General Settings

Change How Long the LCD Backlight Stays On

Related Models: HL-L3270CDW

Set how long the LCD backlight stays on.

1. Press [Settings] > [All Settings] > [General Setup] > [LCD Settings] > [Dim Timer].
2. Press the option you want:
   - [10Secs]
   - [30Secs]
   - [1Min]
   - [2Mins]
   - [3Mins]
   - [5Mins]
3. Press .

Related Information

- General Settings

Reduce Toner Consumption

Using the Toner Save feature may reduce toner consumption. When Toner Save is set to on, the print on your documents appears lighter.

We DO NOT recommend using the Toner Save feature for printing photo or grayscale images.

>> HL-L3210CW/HL-L3230CDN/HL-L3230CDW
>> HL-L3270CDW

HL-L3210CW/HL-L3230CDN/HL-L3230CDW

1. Press ▲ or ▼ to display the [General Setup] option, and then press **OK**.
2. Press ▲ or ▼ to display the [Ecology] option, and then press **OK**.
3. Press ▲ or ▼ to display the [Toner Save] option, and then press **OK**.
4. Press ▲ or ▼ to display [On], and then press **Go**.

HL-L3270CDW

1. Press [Settings] > [All Settings] > [General Setup] > [Ecology] > [Toner Save].
2. Press [On] or [Off].
3. Press .

Related Information

- General Settings

Related Topics:

- Improve the Print Quality

Reduce Printing Noise

The Quiet Mode setting can reduce printing noise. When Quiet Mode is turned on, the print speed becomes slower. The factory setting is off.

>> HL-L3210CW/HL-L3230CDN/HL-L3230CDW
>> HL-L3270CDW

HL-L3210CW/HL-L3230CDN/HL-L3230CDW

1. Press ▲ or ▼ to display the [General Setup] option, and then press **OK**.
2. Press ▲ or ▼ to display the [Ecology] option, and then press **OK**.
3. Press ▲ or ▼ to select the [Quiet Mode] option, and then press **OK**.
4. Press ▲ or ▼ to display the [On] or [Off] option, and then press **Go**.

HL-L3270CDW

1. Press [Settings] > [All Settings] > [General Setup] > [Ecology] > [Quiet Mode].
2. Press [On] or [Off].
3. Press .

Related Information

- General Settings

Change the Language on the LCD

Change the LCD language if needed.

This feature is not available in some countries.

>> HL-L3210CW/HL-L3230CDN/HL-L3230CDW
>> HL-L3270CDW

HL-L3210CW/HL-L3230CDN/HL-L3230CDW

1. Press ▲ or ▼ to display the `[Initial Setup]` option, and then press **OK**.
2. Press ▲ or ▼ to display the `[Local Language]` option, and then press **OK**.
3. Press ▲ or ▼ to display your language, and then press **Go**.

HL-L3270CDW

1. Press `[Settings]` > `[All Settings]` > `[Initial Setup]` > `[Local Language]`.
2. Press your language.
3. Press .

Related Information

- General Settings

Settings and Features Tables

The Settings tables will help you understand the menu selections and options that are found in the machine's programs.

- Access Menus and Change Your Machine's Settings
- Settings Tables (HL-L3210CW/HL-L3230CDN/HL-L3230CDW)
- Settings Tables (HL-L3270CDW)
- Feature Tables (HL-L3270CDW)

Access Menus and Change Your Machine's Settings

Related Models: HL-L3210CW/HL-L3230CDN/HL-L3230CDW

Use the control panel to access the machine's menus and change various settings.

1. Scroll through each menu level by pressing ▲ or ▼.
2. When the option you want appears on the LCD, press **OK**.
   The LCD displays the next menu level.
3. Press ▲ or ▼ to scroll to your selection.
4. Press **OK** or **Go**.
5. When you have finished setting an option, the LCD displays a confirmation message.

Related Information

- Settings and Features Tables

Settings Tables (HL-L3210CW/HL-L3230CDN/HL-L3230CDW)

Related Models: HL-L3210CW/HL-L3230CDN/HL-L3230CDW

Use these tables to understand the various menus and options that you will use to set your preferences on the machine.

[General Setup]

Level 1	Level 2	Level 3	Description
Tray Setting	Paper Type	-	Set the type of paper in the paper tray.
	Paper Size	-	Set the size of paper.
	Check Size	-	Select whether to display a message telling you to check that the size of the paper in the machine and the machine's Paper Size setting match.
	Manual Feed	-	Select whether to print from the Manual Feed Slot.
Ecology	Eco Mode	-	Turn on the following machine settings at the same time. • 2-sided Print: Long Edge (Available only for certain models) • Sleep Time: 0Min
	Toner Save	-	Increase the page yield of the toner cartridge.
	Sleep Time	-	Set how much time will pass before the machine enters Power Saving mode.
	Quiet Mode	-	Decrease printing noise.
	Auto Power Off	-	Set the number of hours that the machine will remain in Deep Sleep mode before going into Power Off mode.
Panel Control	Button Repeat	-	Set the time for the LCD message to change when holding ▲ or ▼ at intervals.
	Message Scroll	-	Set the time in seconds that an LCD message will scroll across the LCD. From Level 1=0.2 s to Level 10=2.0 s.
	LCD Contrast	-	Adjust the contrast of the LCD.
	Auto Online	-	Set the machine to return to Ready mode after it has been idle for 30 seconds.
Setting Lock	-	-	Lock your machine’s settings using the Setting Lock password.
Interface	Select	-	Select the interface to use. If you select Auto, the machine changes the interface to USB or Network depending on which interface is receiving data.
	Auto IF Time	-	Set the time-out period for the auto interface selection.
	Input Buffer	-	Increase or decrease the input buffer capacity.
Delete Storage	Macro ID	-	Delete the registered Macro data.
	Font ID	-	Delete the registered Font data.
	Format	-	Restore the Macro and Font data of your machine to the default settings.

[Printer]

Level 2	Level 3	Level 4	Description
Emulation	-	-	Choose the emulation mode.

Level 2	Level 3	Level 4	Description
Quality	-	-	Select the print quality.
Print Options	Font List	HP LaserJet	Print the font list and samples of HP LaserJet.
		BR-Script 3	Print the font list and samples of BR-Script.
	Test Print	-	Print the test page.
2-sided (For automatic 2-sided printing models)	2-sided Print	-	Select whether to print on both sides of the paper.
	Single Image	-	For a print job where the last page is a 1-sided image, select the 1-sided Feed option to reduce printing time. When you use preprinted paper, you must select the 2-sided Feed option. If you select 1-sided Feed for preprinted paper, the last page will be printed on the reverse side.
Auto Continue	-	-	Select if you want the machine to clear paper size errors or media type errors automatically.
Output Color	-	-	Set the output color.
Paper Type	-	-	Set the type of paper.
Paper Size	-	-	Set the size of paper.
Copies	-	-	Set the number of printed pages.
Orientation	-	-	Set pages to print in either portrait or landscape orientation.
Print Position	X Offset	-	Move the print start position (at the top-left corner of pages) horizontally up to -500 (left) to +500 (right) dots in 300 dpi.
	Y Offset	-	Move the print start position (at the top-left corner of pages) vertically up to -500 (up) to +500 (down) dots in 300 dpi.
Auto FF	-	-	Allow the machine to print any remaining data automatically.
HP LaserJet	Font No.	-	Set the font number.
	Font Pitch	-	Set the font pitch. (Available for certain font numbers)
	Font Point	-	Set the font size. (Available for certain font numbers)
	Symbol Set	-	Select the symbol or character set.
	Table Print	-	Print the code table.
	Auto LF	-	ON: CR -> CR+LF, OFF: CR -> CR
	Auto CR	-	ON: LF -> LF+CR, FF -> FF+CR, or VT -> VT+CR OFF: LF -> LF, FF -> FF, or VT -> VT
	Auto WRAP	-	Choose whether a line feed and carriage return will happen when the machine reaches the right margin.
	Auto SKIP	-	Choose whether a line feed and carriage return will happen when the carriage position reaches the bottom margin.
	Left Margin	-	Set the left margin at column 0 to 70 columns at 1 cpi.
	Right Margin	-	Set the right margin at column 10 to 80 columns at 1 cpi.

Level 2	Level 3	Level 4	Description
HP LaserJet	Top Margin	-	Set the top margin distance from the top edge of the paper.
	Bottom Margin	-	Set the bottom margin distance from the bottom edge of the paper.
	Lines	-	Set the number of lines on each page.
	Tray Command	-	Select this setting if a tray mismatch appears when you use the HP drivers.
BR-Script 3	Error Print	-	Choose whether the machine prints the error information when errors occur.
	CAPT	-	Use CAPT (Color Advanced Printing Technology) for optimal print quality when printing a PS file created by a non-Brother PS driver. Colors and photos appear clearer and more accurate. Print speed will be slower.
Color Correction	Calibration	Calibrate	Initiate color calibration to check and correct colors.
		Reset	Reset the calibration parameters to the default settings.
	Registration	-	Align the print position of each color.
	Auto Correction	-	Set the machine to perform Color Calibration and Registration automatically.
	Color Settings	Setting Mode	Select whether to apply the color print settings of the machine or the printer driver.
		Color Mode	Select the color mode.
		Improve Gray	Turn on or off to improve the image quality of shaded areas.
		Enhance Black	Turn on or off if a black graphic does not print correctly.
		Brightness	Adjust the brightness.
		Contrast	Adjust the contrast.
		Red	Adjust the red color.
		Green	Adjust the green color.
		Blue	Adjust the blue color.

[Network]

For wired and wireless network models

Level 1	Level 2	Level 3	Level 4	Descriptions
Wired LAN	TCP/IP	Boot Method	-	Choose the IP method that best suits your needs.
		IP Address	-	Enter the IP address.
		Subnet Mask	-	Enter the Subnet mask.
		Gateway	-	Enter the Gateway address.
		Node Name	-	Enter the Node name.
		WINS Config	-	Select the WINS configuration mode.
		WINS Server	Primary	Specify the IP address of the primary WINS server.

Level 1	Level 2	Level 3	Level 4	Descriptions
Wired LAN	TCP/IP	WINS Server	Secondary	Specify the IP address of the secondary WINS server.
		DNS Server	Primary	Specify the IP address of the primary DNS server.
			Secondary	Specify the IP address of the secondary DNS server.
		APIPA	-	Allocate the IP address from the link-local address range automatically [1].
		IPv6	-	Turn the IPv6 protocol on or off. For more detailed information, go to your model's **FAQs & Troubleshooting** page on the Brother support website at support.brother.com.
	Ethernet	-	-	Choose the Ethernet link mode.
	Wired Status	-	-	Display the Ethernet link status.
	MAC Address	-	-	Display the MAC address of the machine.
	Set to Default	-	-	Restore wired network settings of your machine to the factory settings.
	Wired Enable	-	-	Turn the wired interface on or off.
WLAN	TCP/IP	Boot Method	-	Choose the IP method that best suits your needs.
		IP Address	-	Enter the IP address.
		Subnet Mask	-	Enter the Subnet mask.
		Gateway	-	Enter the Gateway address.
		Node Name	-	Enter the Node name.
		WINS Config	-	Select the WINS configuration mode.
		WINS Server	Primary	Specify the IP address of the primary WINS server.
			Secondary	Specify the IP address of the secondary WINS server.
		DNS Server	Primary	Specify the IP address of the primary DNS server.
			Secondary	Specify the IP address of the secondary DNS server.
		APIPA	-	Allocate the IP address from the link-local address range automatically [1].
		IPv6	-	Turn the IPv6 protocol on or off. For more detailed information, go to your model's **FAQs & Troubleshooting** page on the Brother support website at support.brother.com.
	Setup Wizard	-	-	Configure the wireless network settings using the setup wizard.
	WLAN Assistant	-	-	Configure your wireless network settings using the Brother installation disc.
	WPS	-	-	Configure your wireless network settings using the one-button push method.
	WPS w/PIN Code	-	-	Configure the wireless network settings using WPS with a PIN code.
	WLAN Status	Status	-	Display the wireless Ethernet link status.
		Signal	-	Display the signal condition.

Level 1	Level 2	Level 3	Level 4	Descriptions
WLAN	WLAN Status	Channel	-	Display the channel in use when Status is Active.
		Speed	-	Display the connection speed when Status is Active.
		SSID	-	Display SSID.
		Comm. Mode	-	Display the current Communication mode.
	MAC Address	-	-	Display the MAC address of the machine.
	Set to Default	-	-	Restore wireless network settings of your machine to the factory settings.
	WLAN Enable	-	-	Turn the wireless interface on or off.
Wi-Fi Direct	Push Button	-	-	Configure your Wi-Fi Direct network settings using the one-button push method quickly.
	PIN Code	-	-	Configure your Wi-Fi Direct network settings using WPS with a PIN code quickly.
	Manual	-	-	Configure your Wi-Fi Direct network settings manually.
	Group Owner	-	-	Set your machine as the Group Owner.
	Device Info.	Device Name	-	View your machine's device name.
		SSID	-	Display the Group Owner's SSID.
		IP Address	-	Display your machine's IP Address.
	Status Info.	Status	-	Display the Wi-Fi Direct network status.
		Signal	-	Display the current Wi-Fi Direct network signal strength. When your machine acts as Group Owner, the LCD always displays Strong.
		Channel	-	Display the channel in use when the Status is G/O Active or Client Active.
		Speed	-	Display the connection speed when the Status is G/O Active or Client Active.
	I/F Enable	-	-	Enable or disable the Wi-Fi Direct connection.
Network Reset	-	-	-	Restore all network settings of your machine to the factory settings.

[1] On connection to the network, if the machine's 'Boot Method' is 'Auto' the machine will attempt to set the IP address and Subnet Mask from a boot server such as DHCP. If a boot server cannot be found, an APIPA IP address will be allocated, such as 169. 254. [001-254]. [000-255]. If the 'Boot Method' of the machine is set to 'Static', you must manually enter an IP address from the machine's control panel.

[Network]

For wired network models

Level 1	Level 2	Level 3	Description
TCP/IP	Boot Method	-	Choose the IP method that best suits your needs.
	IP Address	-	Enter the IP address.
	Subnet Mask	-	Enter the Subnet mask.
	Gateway	-	Enter the Gateway address.
	Node Name	-	Enter the Node name.
	WINS Config	-	Select the WINS configuration mode.

Level 1	Level 2	Level 3	Description
TCP/IP	WINS Server	Primary	Specify the IP address of the primary WINS server.
		Secondary	Specify the IP address of the secondary WINS server.
	DNS Server	Primary	Specify the IP address of the primary DNS server.
		Secondary	Specify the IP address of the secondary DNS server.
	APIPA	-	Allocate the IP address from the link-local address range automatically. [1]
	IPv6	-	Turn the IPv6 protocol on or off. For more detailed information, go to your model's **FAQs & Troubleshooting** page on the Brother support website at support.brother.com.
Ethernet	-	-	Choose the Ethernet link mode.
Wired Status	-	-	Display the Ethernet link status.
MAC Address	-	-	Display the MAC address of the machine.
Network Reset	-	-	Restore all network settings of your machine to the factory settings.

1 On connection to the network, if the machine's 'Boot Method' is 'Auto' the machine will attempt to set the IP address and Subnet Mask from a boot server such as DHCP. If a boot server cannot be found, an APIPA IP address will be allocated, such as 169. 254. [001-254]. [000-255]. If the 'Boot Method' of the machine is set to 'Static', you must manually enter an IP address from the machine's control panel.

[Network]

For wireless network models

Level 1	Level 2	Level 3	Level 4	Descriptions
WLAN	TCP/IP	Boot Method	-	Choose the IP method that best suits your needs.
		IP Address	-	Enter the IP address.
		Subnet Mask	-	Enter the Subnet mask.
		Gateway	-	Enter the Gateway address.
		Node Name	-	Enter the Node name.
		WINS Config	-	Select the WINS configuration mode.
		WINS Server	Primary	Specify the IP address of the primary WINS server.
			Secondary	Specify the IP address of the secondary WINS server.
		DNS Server	Primary	Specify the IP address of the primary DNS server.
			Secondary	Specify the IP address of the secondary DNS server.
		APIPA	-	Allocate the IP address from the link-local address range automatically [1].
		IPv6	-	Turn the IPv6 protocol on or off. For more detailed information, go to your model's **FAQs & Troubleshooting** page on the Brother support website at support.brother.com.
	Setup Wizard	-	-	Configure the wireless network settings using the setup wizard.
	WLAN Assistant	-	-	Configure your wireless network settings using the Brother installation disc.
	WPS	-	-	Configure your wireless network settings using the one-button push method.

Level 1	Level 2	Level 3	Level 4	Descriptions
WLAN	WPS w/PIN Code	-	-	Configure the wireless network settings using WPS with a PIN code.
	WLAN Status	Status	-	Display the wireless Ethernet link status.
		Signal	-	Display the signal condition.
		Channel	-	Display the channel in use when Status is Active.
		Speed	-	Display the connection speed when Status is Active.
		SSID	-	Display SSID.
		Comm. Mode	-	Display the current Communication mode.
	MAC Address	-	-	Display the MAC address of the machine.
	WLAN Enable	-	-	Turn the wireless interface on or off.
Wi-Fi Direct	Push Button	-	-	Configure your Wi-Fi Direct network settings using the one-button push method quickly.
	PIN Code	-	-	Configure your Wi-Fi Direct network settings using WPS with a PIN code quickly.
	Manual	-	-	Configure your Wi-Fi Direct network settings manually.
	Group Owner	-	-	Set your machine as the Group Owner.
	Device Info.	Device Name	-	View your machine's device name.
		SSID	-	Display the Group Owner's SSID.
		IP Address	-	Display your machine's IP Address.
	Status Info.	Status	-	Display the Wi-Fi Direct network status.
		Signal	-	Display the current Wi-Fi Direct network signal strength. When your machine acts as Group Owner, the LCD always displays Strong.
		Channel	-	Display the channel in use when the Status is G/O Active or Client Active.
		Speed	-	Display the connection speed when the Status is G/O Active or Client Active.
	I/F Enable	-	-	Enable or disable the Wi-Fi Direct connection.
Network Reset	-	-	-	Restore all network settings of your machine to the factory settings.

1 On connection to the network, if the machine's ‘Boot Method’ is ‘Auto’ the machine will attempt to set the IP address and Subnet Mask from a boot server such as DHCP. If a boot server cannot be found, an APIPA IP address will be allocated, such as 169. 254. [001-254]. [000-255]. If the ‘Boot Method’ of the machine is set to ‘Static’, you must manually enter an IP address from the machine's control panel.

[Print Reports]

Level 1	Level 2	Description
Printer Settings	-	Print the Printer Settings page.
Network Config	-	Print the Network Configuration Report.
Print File List (Available only for certain models)	-	Print a list of data saved in the memory.
Drum Dot Print	-	Print the Drum Dot Check Sheet.
WLAN Report	-	Print the wireless LAN connectivity diagnosis result.

Level 1	Level 2	Description
(For wireless models)		

[Machine Info.]

Level 1	Level 2	Description
Serial No.	-	Display the machine's serial number.
Firmware Version	-	Check your machine's firmware version.
Page Counter	-	Display the total printed pages.
Parts Life [1]	Toner	Display the remaining life of each toner.
	Drum	Display the remaining life of each drum unit.
	Belt	Display the remaining life of the belt unit.
	Fuser	Display the remaining life of the fuser unit.
	PF Kit 1	Display the remaining life of the PF Kit 1.

[1] Life is approximate and may vary by type of use.

[Initial Setup]

Level 1	Level 2	Description
Reset	Machine Reset	Restore all the machine settings that you have changed.
	Network Reset	Restore all network settings back to the factory settings.
	Factory Reset	Restores all the machine's settings to the factory defaults. Perform this operation when you dispose of your machine.
Local Language	-	Select the LCD language for your country.

Related Information

- Settings and Features Tables

Settings Tables (HL-L3270CDW)

Related Models: HL-L3270CDW

[Settings]

Level 2	Level 3	Level 4	Descriptions
Toner	Toner Life	-	View the approximate remaining toner life.
	Test Print	-	Print a test page.
	Calibration	Calibrate	Initiate color calibration to check and correct colors.
		Reset	Reset the calibration parameters to the default settings.
	Registration	-	Align the print position of each color.
Network	-	-	Access the Network setting menus.
Tray Setting	-	-	Access the tray setting menus.
Wi-Fi Direct	-	-	Access the Wi-Fi Direct setting menus.
Eco Mode	-	-	Turn on the following machine settings at the same time. • 2-sided Print: Long Edge (Available only for certain models) • Sleep Time: 0 Min • Dim Timer: 10 Secs
All Settings	-	-	Configure the detailed settings.

[All Settings] > [General Setup]

Level 3	Level 4	Descriptions
Tray Setting	Paper Type	Select the paper type that matches the paper in the tray.
	Paper Size	Select the size of paper you loaded in the tray.
	Check Size	Select whether to display a message telling you to check that the size of the paper in the machine and the machine's Paper Size setting match.
	Manual Feed	Select whether to print from the Manual Feed Slot.
LCD Settings	Backlight	Adjust the brightness of the LCD backlight.
	Dim Timer	Set how long the LCD backlight stays on after the last finger press.
Ecology	Eco Mode	Turn on the following machine settings at the same time. • 2-sided Print: Long Edge (Available only for certain models) • Sleep Time: 0 Min • Dim Timer: 10 Secs
	Toner Save	Increase the page yield of the toner cartridge.
	Sleep Time	Set how much time will pass before the machine enters Power Saving mode.
	Quiet Mode	Decrease printing noise.
	Auto Power Off	Set the number of hours that the machine will remain in Deep Sleep mode before going into Power Off mode.
Setting Lock	Set Password	Restrict unauthorized users from changing the machine's settings.
	Lock Off⇒On	

Level 3	Level 4	Descriptions
Interface	Select	Select the interface to use. If you select the Auto option, the machine changes the interface to USB or Network depending on which interface is receiving data.
	Auto IF Time	Set the time-out period for the auto interface selection.
	Input Buffer	Increase or decrease the input buffer capacity.
Delete Storage	Macro ID	Delete the registered Macro data.
	Font ID	Delete the registered Font data.
	Format	Restore the Macro and Font data of your machine to the default settings.

[All Settings] > [Printer]

Level 3	Level 4	Level 5	Descriptions
Emulation	-	-	Choose the emulation mode.
Quality	-	-	Select the print quality.
Print Options	Font List	HP LaserJet	Print the font list and samples of HP LaserJet.
		BR-Script 3	Print the font list and samples of BR-Script.
	Test Print	-	Print the test page.
2-sided	2-sided Print	-	Select whether to print on both sides of the paper.
	Single Image	-	For a print job where the last page is a 1-sided image, select the 1-sided Feed option to reduce printing time. When you use preprinted paper, you must select the 2-sided Feed option. If you select 1-sided Feed for preprinted paper, the last page will be printed on the reverse side.
Auto Continue	-	-	Select if you want the machine to clear paper size errors or media type errors automatically, and use paper from other trays.
Output Color	-	-	Set the output color.
Paper Type	-	-	Set the type of paper.
Paper Size	-	-	Set the size of paper.
Copies	-	-	Set the number of printed pages.
Orientation	-	-	Set pages to print in either portrait or landscape orientation.
Print Position	X Offset	-	Move the print start position (at the top-left corner of pages) horizontally up to -500 (left) to +500 (right) dots in 300 dpi.
	Y Offset	-	Move the print start position (at the top-left corner of pages) vertically up to -500 (up) to +500 (down) dots in 300 dpi.
Auto FF	-	-	Allow the machine to print any remaining data automatically.
HP LaserJet	Font No.	Font No.	Set the font number.
		Soft Font No.	Set the soft font number. This menu appears if a soft font is installed on your Brother machine.
	Font Pitch	-	Set the font pitch. (Available for certain font numbers)

Level 3	Level 4	Level 5	Descriptions
HP LaserJet	Font Point	-	Set the font size. (Available for certain font numbers)
	Symbol Set	-	Select the symbol or character set.
	Table Print	-	Print the code table.
	Auto LF	-	ON: CR -> CR+LF, OFF: CR -> CR
	Auto CR	-	ON: LF -> LF+CR, FF -> FF+CR, or VT -> VT+CR OFF: LF -> LF, FF -> FF, or VT -> VT
	Auto WRAP	-	Choose whether a line feed and carriage return will happen when the machine reaches the right margin.
	Auto SKIP	-	Choose whether a line feed and carriage return will happen when the carriage position reaches the bottom margin.
	Left Margin	-	Set the left margin at column 0 to 70 columns at 1 cpi.
	Right Margin	-	Set the right margin at column 10 to 80 columns at 1 cpi.
	Top Margin	-	Set the top margin distance from the top edge of the paper.
	Bottom Margin	-	Set the bottom margin distance from the bottom edge of the paper.
	Lines	-	Set the number of lines on each page.
	Tray Command	-	Select this setting if a tray mismatch appears when you use the HP drivers.
BR-Script 3	Error Print	-	Choose whether the machine prints the error information when errors occur.
	CAPT	-	Use CAPT (Color Advanced Printing Technology) for optimal print quality when printing a PS file created by a non-Brother PS driver. Colors and photos appear clearer and more accurate. Print speed will be slower.
Color Correction	Calibration	Calibrate	Initiate color calibration to check and correct colors.
		Reset	Reset the calibration parameters to the default settings.
	Registration	-	Align the print position of each color.
	Auto Correction	-	Set the machine to perform Color Calibration and Registration automatically.
	Color Settings	Setting Mode	Select whether to apply the color print settings of the machine or the printer driver.
		Color Mode	Select the color mode.
		Improve Gray Color	Turn on or off to improve the image quality of shaded areas.
		Enhance Black Printing	Turn on or off if a black graphic does not print correctly.
		Brightness	Adjust the brightness.
		Contrast	Adjust the contrast.
		Red	Adjust the red color.
		Green	Adjust the green color.
		Blue	Adjust the blue color.

[All Settings] > [Network]

Level 3	Level 4	Level 5	Level 6	Descriptions
Wired LAN	TCP/IP	Boot Method	-	Choose the IP method that best suits your needs.
		IP Address	-	Enter the IP address.
		Subnet Mask	-	Enter the Subnet mask.
		Gateway	-	Enter the Gateway address.
		Node Name	-	Enter the Node name.
		WINS Configuration	-	Select the WINS configuration mode.
		WINS Server	Primary	Specify the IP address of the primary WINS server.
			Secondary	Specify the IP address of the secondary WINS server.
		DNS Server	Primary	Specify the primary DNS server's IP address.
			Secondary	Specify the secondary DNS server's IP address.
		APIPA	-	Allocate the IP address from the link-local address range automatically [1].
		IPv6	-	Turn the IPv6 protocol on or off. For more detailed information, go to your model's **FAQs & Troubleshooting** page on the Brother support website at support.brother.com.
	Ethernet	-	-	Choose the Ethernet link mode.
	Wired Status	-	-	Display the Ethernet link status.
	MAC Address	-	-	Display the MAC address of the machine.
	Set to Default	-	-	Restore wired network settings of your machine to the factory settings.
	Wired Enable	-	-	Turn the wired interface on or off.
WLAN	TCP/IP	Boot Method	-	Choose the IP method that best suits your needs.
		IP Address	-	Enter the IP address.
		Subnet Mask	-	Enter the Subnet mask.
		Gateway	-	Enter the Gateway address.
		Node Name	-	Enter the Node name.
		WINS Configuration	-	Select the WINS configuration mode.
		WINS Server	Primary	Specify the IP address of the primary WINS server.
			Secondary	Specify the IP address of the secondary WINS server.
		DNS Server	Primary	Specify the primary DNS server's IP address.
			Secondary	Specify the secondary DNS server's IP address.
		APIPA	-	Allocate the IP address from the link-local address range automatically [1].

Level 3	Level 4	Level 5	Level 6	Descriptions
WLAN	TCP/IP	IPv6	-	Turn the IPv6 protocol on or off. For more detailed information, go to your model's **FAQs & Troubleshooting** page on the Brother support website at support.brother.com.
	Setup Wizard	-	-	Configure the wireless network settings using the setup wizard.
	WLAN Assistant	-	-	Configure your wireless network settings using the Brother installation disc.
	WPS	-	-	Configure your wireless network settings using the one-button push method.
	WPS w/ PIN Code	-	-	Configure the wireless network settings using WPS with a PIN code.
	WLAN Status	Status	-	Display the wireless Ethernet link status.
		Signal	-	Display the signal condition.
		SSID	-	Display SSID.
		Comm. Mode	-	Display the current Communication mode.
	MAC Address	-	-	Display the MAC address of the machine.
	Set to Default	-	-	Restore wireless network settings of your machine to the factory settings.
	WLAN Enable	-	-	Turn the wireless interface on or off.
Wi-Fi Direct	Push Button	-	-	Configure your Wi-Fi Direct network settings using the one-button push method quickly.
	PIN Code	-	-	Configure your Wi-Fi Direct network settings using WPS with a PIN code quickly.
	Manual	-	-	Configure your Wi-Fi Direct network settings manually.
	Group Owner	-	-	Set your machine as the Group Owner.
	Device Information	Device Name	-	View your machine's device name.
		SSID	-	Display the Group Owner's SSID.
		IP Address	-	Display your machine's IP Address.
	Status Information	Status	-	Display the Wi-Fi Direct network status.
		Signal	-	Display the current Wi-Fi Direct network signal strength.
	I/F Enable	-	-	Enable or disable the Wi-Fi Direct connection.
NFC	-	-	-	Turn the NFC function on or off.
Web Connect Settings	Proxy Settings	Proxy Connection	-	Change the web connection settings.
		Address	-	
		Port	-	
		User Name	-	
		Password	-	
Network Reset	-	-	-	Restore all network settings of your machine to the factory settings.

[1] On connection to the network, if the machine's 'Boot Method' is 'Auto' the machine will attempt to set the IP address and Subnet Mask from a boot server such as DHCP. If a boot server cannot be found, an APIPA IP address will be allocated, such as 169. 254. [001-254]. [000-255]. If the 'Boot Method' of the machine is set to 'Static' you must manually enter an IP address from the machine's control panel.

[All Settings] > [Print Reports]

Level 3	Descriptions
Printer Settings	Print the Printer Settings page.
Network Configuration	Print the Network Configuration Report.
Print File List	Print a list of data saved in the memory.
Drum Dot Print	Print the Drum Dot Check Sheet.
WLAN Report	Print the wireless LAN connectivity diagnosis result.

[All Settings] > [Machine Information]

Level 3	Level 4	Descriptions
Serial No.	-	Display the machine's serial number.
Firmware Version	Main Version	Display the main firmware version.
	Sub1 Version	Display the sub firmware version.
Firmware Update	-	Update your machine to the latest firmware.
Firmware Auto Check	-	View firmware information on the Home screen.
Page Counter	Total	Display the total printed pages.
	Color	Display the total color printed pages.
	Black and White	Display the total monochrome printed pages.
Parts Life [1]	Drum	Display the remaining life of each drum unit.
	Belt	Display the remaining life of the belt unit.
	Fuser	Display the remaining life of the fuser unit.
	PF Kit 1	Display the remaining life of the PF Kit 1.

[1] Life is approximate and may vary by type of use.

[All Settings] > [Initial Setup]

Level 3	Level 4	Descriptions
Reset	Machine Reset	Restore all the machine's settings that you have changed, such as Paper Type.
	Network Reset	Restore all network settings of your machine to the factory settings.
	Factory Reset	Reset the machine and restore the printer settings (including command settings) to the factory settings.
Local Language	-	Select the LCD language for your country.

Related Information

- Settings and Features Tables

Feature Tables (HL-L3270CDW)

Related Models: HL-L3270CDW

(Wi-Fi Setup)

Level 2	Level 3	Descriptions
(Wi-Fi Setup)	TCP/IP [1]	Change the TCP/IP settings.
	Setup Wizard	Configure the wireless network settings using the setup wizard.
	WLAN Assistant	Configure your wireless network settings using the Brother installation disc.
	WPS	Configure your wireless network settings using the one-button push method.
	WPS w/ PIN Code [1]	Configure the wireless network settings using WPS with a PIN code.
	WLAN Status [1]	Display the wireless network connection status.
	MAC Address [1]	Display the MAC address of the machine.
	Set to Default [1]	Restore wireless network settings of your machine to the factory settings.
	WLAN Enable [1]	Turn the wireless interface on or off.

[1] Available after the Wi-Fi® is set up.

[Toner]

Level 2	Level 3	Level 4	Descriptions
Toner	Toner Life	-	View the approximate remaining toner life for each color.
	Test Print	-	Print the test page.
	Calibration	Calibrate	Initiate color calibration to check and correct colors.
		Reset	Reset the calibration parameters to the default settings.
	Registration	-	Align the print position of each color.

[Functions]

Level 2	Level 3	Descriptions
Functions	Secure Print	Press to access the Secure Print option.
	Web	Press to connect the Brother machine to an Internet service.

Related Information

- Settings and Features Tables

Change Machine Settings from Your Computer

- Change Machine Settings Using Web Based Management
- Where Can I Find My Brother Machine's Network Settings?
- Network Management Software and Utilities

Change Machine Settings Using Web Based Management

Web Based Management is a utility that uses a standard web browser to manage your machine using the Hyper Text Transfer Protocol (HTTP) or Hyper Text Transfer Protocol over Secure Socket Layer (HTTPS).

- What is Web Based Management?
- Access Web Based Management
- Set or Change a Login Password for Web Based Management
- Network Management Software and Utilities
- Learn about Network Management Software and Utilities

What is Web Based Management?

Web Based Management is a utility that uses a standard web browser to manage your machine using the Hyper Text Transfer Protocol (HTTP) or Hyper Text Transfer Protocol over Secure Socket Layer (HTTPS). Type your machine's IP address into your web browser to access and change your print server settings.

- We recommend Microsoft Internet Explorer 11/Microsoft Edge for Windows and Safari 10/11 for Mac. Make sure that JavaScript and Cookies are always enabled in whichever browser you use.
- You must use the TCP/IP protocol on your network and have a valid IP address programmed into the print server and your computer.

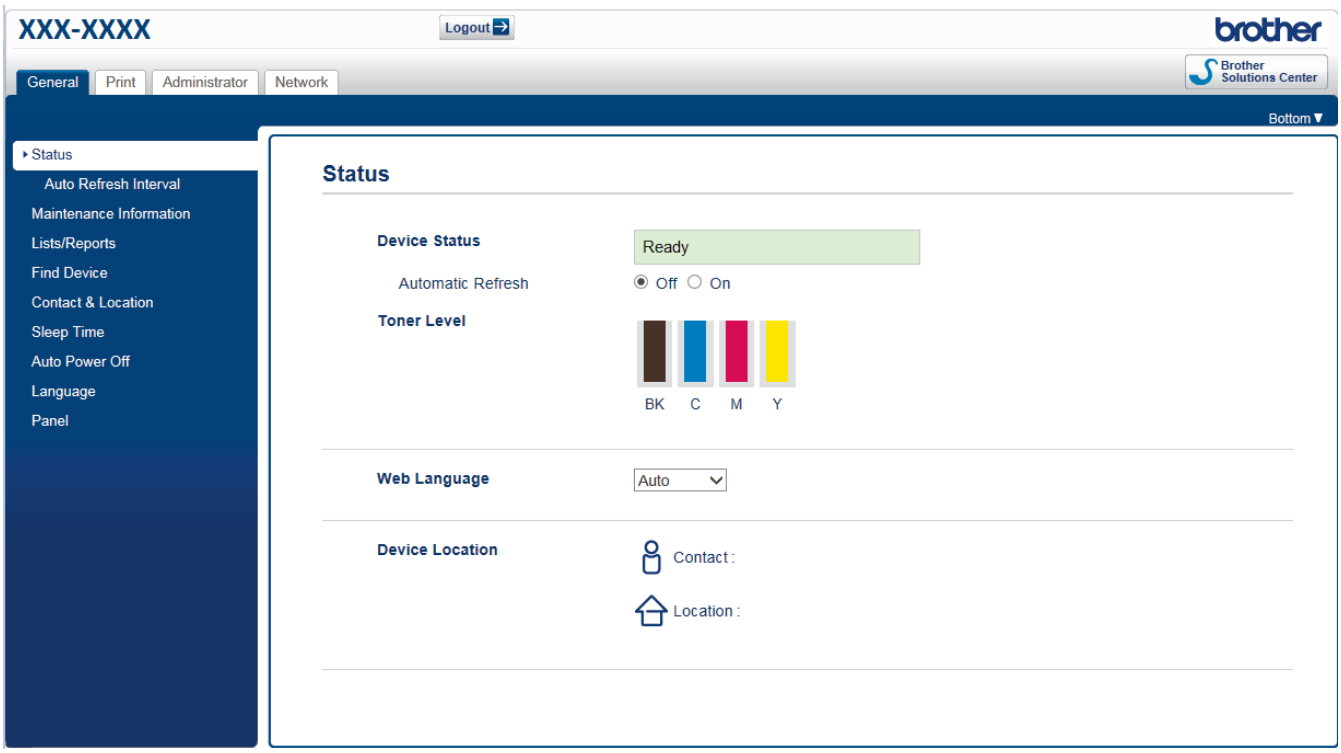

- The actual screen may differ from the screen shown above.

Related Information

- Change Machine Settings Using Web Based Management

Access Web Based Management

- We recommend using the HTTPS security protocol when configuring settings using Web Based Management.
- When you use HTTPS for Web Based Management configuration, your browser will display a warning dialog box. To avoid displaying the warning dialog box, you can install a self-signed certificate to use SSL/TLS communication. For more detailed information, see *Related Information*.
- The default login password to manage machine settings is **initpass**. We recommend you change it to protect your machine from unauthorized access.

1. Start your web browser.
2. Type "https://machine's IP address" in your browser's address bar (where "machine's IP address" is the machine's IP address).

   For example:

   https://192.168.1.2

   - If you are using a Domain Name System or enable a NetBIOS name, you can type another name, such as "SharedPrinter" instead of the IP address.
     - For example:

       https://SharedPrinter

     If you enable a NetBIOS name, you can also use the node name.
     - For example:

       https://brnxxxxxxxxxxxx

     The NetBIOS name can be found in the Network Configuration Report.
   - For Mac, access Web Based Management by clicking the machine's icon on the **Status Monitor** screen.

3. If the machine prompts you for a password, type it, and then click .

You can now change the print server settings.

If you change the protocol settings, you must restart the machine after clicking **Submit** to activate the configuration.

Every time you access Web Based Management, type the password in the **Login** field, and then click . After configuring the settings, log out by clicking .

Related Information

- Change Machine Settings Using Web Based Management

Related Topics:

- Print the Network Configuration Report
- Create a Self-signed Certificate
- Install the Self-signed Certificate for Windows users with Administrator Rights

Set or Change a Login Password for Web Based Management

We recommend changing the default login password to prevent unauthorized access to Web Based Management.

1. Start your web browser.
2. Type "https://machine's IP address" in your browser's address bar (where "machine's IP address" is the machine's IP address).

   For example:

   https://192.168.1.2

   - If you are using a Domain Name System or enable a NetBIOS name, you can type another name, such as "SharedPrinter" instead of the IP address.
     - For example:

       https://SharedPrinter

     If you enable a NetBIOS name, you can also use the node name.
     - For example:

       https://brnxxxxxxxxxxxx

     The NetBIOS name can be found in the Network Configuration Report.
   - For Mac, access Web Based Management by clicking the machine's icon on the **Status Monitor** screen.
3. Do one of the following:
   - If you have previously set your own password, type it, and then click .
   - If you have not previously set your own password, type **initpass**, and then click .
4. Click **Administrator**.
5. Type the password you want to use in the **Enter New Password** field (8 to 32 characters).
6. Retype the password in the **Confirm New Password** field.
7. Click **Submit**.

Related Information

- Change Machine Settings Using Web Based Management

Appendix

- Specifications
- How to Enter Text on Your Brother Machine
- Supplies
- Important Information About Toner Cartridge Life
- Brother Numbers

Specifications

>> General Specifications
>> Print Media Specifications
>> Printer Specifications
>> Interface Specifications
>> Supported Protocols and Security Features
>> Computer Requirements Specifications

General Specifications

Printer Type		• LED
Print Method		• Electrophotographic LED Printer
Memory Capacity	**Standard**	• 256 MB
LCD (Liquid Crystal Display)		• HL-L3210CW/HL-L3230CDN/HL-L3230CDW 16 characters x 1 line • HL-L3270CDW 2.7 in. (67.5 mm) TFT Color touchscreen LCD [1]
Power Source		• 110 to 120 V AC 50/60 Hz
Power Consumption (Average)	**Peak**	• HL-L3210CW Approximately 1160 W • HL-L3230CDN - • HL-L3230CDW Approximately 1290 W • HL-L3270CDW Approximately 1290 W
	Printing [2]	• HL-L3210CW Approximately 390 W at 77°F (25°C) • HL-L3230CDN - • HL-L3230CDW Approximately 430 W at 77°F (25°C) • HL-L3270CDW Approximately 430 W at 77°F (25°C)
	Printing (Quiet Mode) [2]	• HL-L3210CW Approximately 270 W at 77°F (25°C) • HL-L3230CDN - • HL-L3230CDW Approximately 260 W at 77°F (25°C) • HL-L3270CDW Approximately 260 W at 77°F (25°C)
	Ready [2]	• HL-L3210CW Approximately 75 W at 77°F (25°C) • HL-L3230CDN -

1 Measured diagonally.
2 Measured when the machine is connected to the USB interface.

Power Consumption (Average)		• HL-L3230CDW Approximately 65 W at 77°F (25°C) • HL-L3270CDW Approximately 65 W at 77°F (25°C)
	Sleep [2]	• HL-L3210CW Approximately 8.8 W • HL-L3230CDN - • HL-L3230CDW Approximately 9.1 W • HL-L3270CDW Approximately 9.1 W
	Deep Sleep [2]	• HL-L3210CW Approximately 1.0 W • HL-L3230CDN - • HL-L3230CDW Approximately 1.2 W • HL-L3270CDW Approximately 1.2 W
	Power Off [3] [4]	• HL-L3210CW Approximately 0.02 W • HL-L3230CDN - • HL-L3230CDW Approximately 0.02 W • HL-L3270CDW Approximately 0.02 W
Dimensions (Typical outline view) 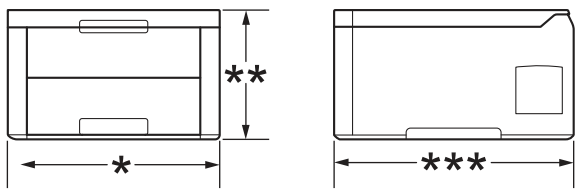 		Unit: in. (mm) • HL-L3210CW/HL-L3230CDN/HL-L3230CDW * : 16.1 (410) ** : 9.9 (252) *** : 18.1 (461) • HL-L3270CDW * : 17.3 (439) ** : 9.9 (252) *** : 18.1 (461)
Weights (with supplies)		• HL-L3210CW 37.8 lb (17.1 kg) • HL-L3230CDN 39.8 lb (18.0 kg) • HL-L3230CDW 39.7 lb (18.0 kg) • HL-L3270CDW 40.3 lb (18.3 kg)

3 Measured according to IEC 62301 Edition 2.0.

4 Power consumption varies slightly depending on the usage environment.

Noise Level	**Sound Pressure**	**Printing**	• HL-L3210CW/HL-L3230CDN LpAm = 45 dB (A) • HL-L3230CDW/HL-L3270CDW LpAm = 47 dB (A)
		Printing (Quiet Mode)	• LpAm = 43 dB (A)
		Ready	• Default: Inaudible [5]
	Sound Power	**Printing**	**Monochrome** • HL-L3210CW/HL-L3230CDN LWAd = 5.93 B (A) • HL-L3230CDW/HL-L3270CDW LWAd = 6.19 B (A)
			Color • HL-L3210CW/HL-L3230CDN LWAd = 5.93 B (A) • HL-L3230CDW/HL-L3270CDW LWAd = 6.29 B (A)
		Printing (Quiet Mode)	**Monochrome** • LWAd = 5.78 B (A)
			Color • LWAd = 5.86 B (A)
		Ready	• Default: Inaudible [6]
Temperature	**Operating**		• From 50°F to 90°F (10°C to 32°C)
	Storage		• From 32°F to 104°F (0°C to 40°C)
Humidity	**Operating**		• 20 to 80% (without condensation)
	Storage		• 10 to 95% (without condensation)

Print Media Specifications

Paper Input	**Paper Tray (Standard)**	**Paper Type**	• Plain Paper, Thin Paper, Thick Paper, Recycled Paper
		Paper Size	• A4, Letter, A5, A5 (Long Edge), A6, Executive, Legal, Folio, Mexico Legal, India Legal
		Paper Weight	• 16 to 43 lb (60 to 163 g/m²)
		Maximum Paper Capacity	• Up to 250 sheets of 20 lb (80 g/m^2) Plain Paper
	Manual Feed Slot	**Paper Type**	• Plain Paper, Thin Paper, Thick Paper, Recycled Paper, Bond, Label, Envelope, Env. Thin, Env.Thick, Glossy Paper
		Paper Size	• Width: 3 to 8.5 in. (76.2 to 216 mm) • Length: 4.57 to 14 in. (116 to 355.6 mm) • Envelope: COM-10, DL, C5, Monarch
		Paper Weight	• 16 to 43 lb (60 to 163 g/m^2)

5 If fan motor is functioning: LpAm = 33 dB (A)

6 If fan motor is functioning: LWAd = 4.67 B (A)

Paper Input	**Manual Feed Slot**	**Maximum Paper Capacity**	• One sheet
Paper Output [1]	**Face Down Output Tray**		• Up to 150 sheets of 20 lb (80 g/m^2) Plain Paper (face-down delivery to the face-down output paper tray)
	Face Up Output Tray		• One sheet (face-up delivery to the face-up output tray)
2-sided	**Automatic 2-sided Printing** (HL-L3230CDN/ HL-L3230CDW/ HL-L3270CDW)	**Paper Type**	• Plain Paper, Thin Paper, Thick Paper, Recycled Paper
		Paper Size	• Letter, Legal, Folio, Mexico Legal, India Legal
		Paper Weight	• 16 to 43 lb (60 to 163 g/m²)

[1] For labels, we recommend removing the printed sheets from the output paper tray immediately after they exit the machine to avoid the possibility of smudging.

Printer Specifications

Automatic 2-sided Print		• HL-L3230CDN/HL-L3230CDW/HL-L3270CDW Yes
Emulation		• PCL6, BR-Script3, PDF Version 1.7, XPS Version 1.0
Resolution		• 600 x 600 dpi, 2,400 dpi class (2400 x 600) quality
Print Speed [7] [8]	**1-sided print**	**Monochrome** • HL-L3210CW/HL-L3230CDN Up to 19 pages/minute (Letter size) Up to 18 pages/minute (A4 size) • HL-L3230CDW/HL-L3270CDW Up to 25 pages/minute (Letter size) Up to 24 pages/minute (A4 size)
		Color • HL-L3210CW/HL-L3230CDN Up to 19 pages/minute (Letter size) Up to 18 pages/minute (A4 size) • HL-L3230CDW/HL-L3270CDW Up to 25 pages/minute (Letter size) Up to 24 pages/minute (A4 size)
	2-sided Print	**Monochrome** • HL-L3230CDN Up to 6 sides/minute (Up to 3 sheets/minute) (Letter or A4 size) • HL-L3230CDW/HL-L3270CDW Up to 8 sides/minute (Up to 4 sheets/minute) (Letter or A4 size)
		Color • HL-L3230CDN Up to 6 sides/minute (Up to 3 sheets/minute) (Letter or A4 size) • HL-L3230CDW/HL-L3270CDW Up to 8 sides/minute (Up to 4 sheets/minute) (Letter or A4 size)
First Print Time [9]		**Monochrome** • HL-L3210CW/HL-L3230CDN

[7] The print speed may change depending on the type of document you print.

[8] Print speed may be slower when the machine is connected by wireless LAN.

[9] Print from Ready mode and standard tray.

First Print Time [9]	Less than 15.5 seconds at 73.4°F (23°C) / 115 V • HL-L3230CDW/HL-L3270CDW Less than 14 seconds at 73.4°F (23°C) / 115 V
	Color • HL-L3210CW/HL-L3230CDN Less than 15.5 seconds at 73.4°F (23°C) / 115 V • HL-L3230CDW/HL-L3270CDW Less than 14 seconds at 73.4°F (23°C) / 115 V

Interface Specifications

USB [1 2]	• Hi-Speed USB 2.0 Use a USB 2.0 interface cable that is no more than 6 feet (2 meters) long.
LAN	• HL-L3230CDN/HL-L3230CDW/HL-L3270CDW 10Base-T/100Base-TX [3]
Wireless LAN	• HL-L3210CW/HL-L3230CDW/HL-L3270CDW IEEE 802.11b/g/n (Infrastructure Mode) IEEE 802.11g/n (Wi-Fi Direct®)
NFC	• HL-L3270CDW Yes

1 Your machine has a USB 2.0 Hi-Speed interface. The machine can also be connected to a computer that has a USB 1.1 interface.

2 Third party USB ports are not supported.

3 Use a straight-through Category 5 (or greater) twisted-pair cable.

Supported Protocols and Security Features

Ethernet

10Base-T/100Base-TX

Wireless LAN

IEEE 802.11b/g/n (Infrastructure Mode), IEEE 802.11g/n (Wi-Fi Direct)

Protocols (IPv4)

ARP, RARP, BOOTP, DHCP, APIPA (Auto IP), WINS/NetBIOS name resolution, DNS Resolver, mDNS, LLMNR responder, LPR/LPD, Custom Raw Port/Port9100, IPP/IPPS, FTP Server, TELNET Server, HTTP/HTTPS server, TFTP client and server, SMTP Client, SNMPv1/v2c/ v3, ICMP, Web Services (Print), CIFS client, SNTP client

Protocols (IPv6)

NDP, RA, DNS resolver, mDNS, LLMNR responder, LPR/LPD, Custom Raw Port/Port9100, IPP/IPPS, FTP Server, TELNET Server, HTTP/HTTPS server, TFTP client and server, SMTP Client, SNMPv1/v2c/v3, ICMPv6, Web Services (Print), CIFS Client, SNTP Client

Network Security (Wired)

SMTP-AUTH, SSL/TLS (IPPS, HTTPS, SMTP, POP), SNMP v3, 802.1x (EAP-MD5, EAP-FAST, PEAP, EAP-TLS, EAP-TTLS), Kerberos

Network Security (Wireless)

SMTP-AUTH, SSL/TLS (IPPS, HTTPS, SMTP, POP), SNMP v3, 802.1x (LEAP, EAP-FAST, PEAP, EAP-TLS, EAP-TTLS), Kerberos

Wireless Network Security

WEP 64/128 bit, WPA-PSK (TKIP/AES), WPA2-PSK (TKIP/AES) [10]

10 Wi-Fi Direct supports WPA2-PSK (AES) only.

Wireless Certification

Wi-Fi Certification Mark License (WPA™/WPA2™ - Enterprise, Personal), Wi-Fi Protected Setup™ (WPS) Identifier Mark License, Wi-Fi CERTIFIED™ Wi-Fi Direct

Computer Requirements Specifications

Supported Operating Systems And Software Functions

Computer Platform & Operating System Version		**PC Interface**				**Processor**	**Hard Disk Space to Install**
		Parallel (IEEE1284)	**USB** [1]	**10Base-T/ 100Base-TX** [2] **(Ethernet)**	**Wireless** [3] **802.11b/g/n**		
Windows Operating System	Windows 7 SP1 / 8 / 8.1	N/A	Printing			32 bit (x86) or 64 bit (x64) processor	80 MB
	Windows 10 Home / 10 Pro / 10 Education / 10 Enterprise						
	Windows Server 2008		Printing				
	Windows Server 2008 R2					64 bit (x64) processor	
	Windows Server 2012						
	Windows Server 2012 R2						
	Windows Server 2016						
Mac Operating System	macOS v10.11.6		Printing			Intel® Processor	80 MB
	macOS v10.12.x						
	macOS v10.13.x						

1 Third party USB ports are not supported.
2 HL-L3230CDN/HL-L3230CDW/HL-L3270CDW
3 HL-L3210CW/HL-L3230CDW/HL-L3270CDW

For the latest driver updates, go to your model's **Downloads** page on the Brother Solutions Center at support.brother.com.

All trademarks, brand and product names are the property of their respective companies.

Related Information

- Appendix

How to Enter Text on Your Brother Machine

>> HL-L3210CW/HL-L3230CDN/HL-L3230CDW
>> HL-L3270CDW

HL-L3210CW/HL-L3230CDN/HL-L3230CDW

When text is required, enter characters on the machine. The characters that are available may differ depending on the operation you perform.

- Hold down or repeatedly press ▲ or ▼ to select a character from this list:
  0123456789abcdefghijklmnopqrstuvwxyzABCDEFGHIJKLMNOPQRSTUVWXYZ(space)!"#$%&'()*+,-./:;<=>?@[\]^_‘{|}~
- Press **OK** when the character or symbol you want is displayed, and then enter the next character.
- Press **Back** to delete characters entered incorrectly.

HL-L3270CDW

- When you must enter text on your Brother machine, a keyboard appears on the LCD.
- The characters that are available may differ depending on your country.
- The keyboard layout may differ depending on the operation you perform.

- Press A 1 @ to cycle between letters, numbers and special characters.
- Press ⇧aA to cycle between lowercase and uppercase letters.
- To move the cursor to the left or right, press ◀ or ▶.

Inserting spaces

- To enter a space, press `[Space]`.

Making corrections

- If you entered a character incorrectly and want to change it, press ◀ or ▶ to move the cursor to the incorrect character and press ⌫. Enter the correct character.
- To insert a character, press ◀ or ▶ to move the cursor to the correct place, and then enter the character.
- Press ⌫ for each character you want to erase, or press and hold ⌫ to erase all the characters.

Related Information

- Appendix

Related Topics:

- Configure Your Machine for a Wireless Network Using the Machine's Control Panel Setup Wizard

- Configure Your Machine for a Wireless Network When the SSID Is Not Broadcast

Supplies

When the time comes to replace supplies, such as the toner or drum, an error message will appear on your machine's control panel or in the Status Monitor. For more information about the supplies for your machine, visit www.brother.com/original/index.html or contact your local Brother dealer.

The Supply Order Number (No.) will vary depending on your country and region.

Supply Items	Supply Order No.	Approximate Life (Page Yield)
Toner Cartridge 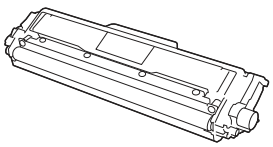	Standard Toner: TN-223	• Black: Approximately 1,400 pages [1] [2] • Cyan / Magenta / Yellow: Approximately 1,300 pages [1] [2]
	High Yield Toner: TN-227	• Black: Approximately 3,000 pages [1] [2] • Cyan / Magenta / Yellow: Approximately 2,300 pages [1] [2]
	Starter Toner: (Supplied with your machine)	• Black: Approximately 1,000 pages [1] [2] • Cyan / Magenta / Yellow: Approximately 1,000 pages [1] [2]
Drum Unit 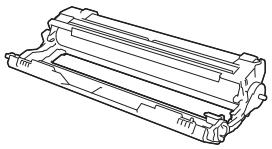	DR-223CL [3]	Approximately 18,000 pages [4]
Belt Unit 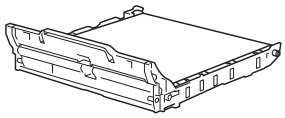	BU-223CL	Approximately 50,000 pages [5]
Waste Toner Box 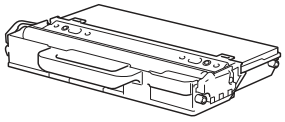	WT-223CL	Approximately 50,000 pages [2]

1 Approximate cartridge yield is declared in accordance with ISO/IEC 19798.

2 Letter or A4 size single-sided pages

3 Contains four drum units; one black and three colors.

4 Approximately 18,000 pages based on one page per job [A4/Letter single-sided pages]. The number of pages may be affected due to a variety of factors including but not limited to media type and media size.

5 Approximately 50,000 pages based on two pages per job [A4/Letter single-sided pages]. The number of pages may be affected due to a variety of factors including but not limited to media type and media size.

Related Information

- Appendix

Related Topics:

- Replace Supplies

Important Information About Toner Cartridge Life

Toner Cartridge Life

This product detects the life of the toner cartridges using the following two methods:

- Detection by counting the dots of each color that are necessary to create an image
- Detection by counting the rotations of the developer roller

This product has a function that will count the dots of each color used to print every document and the rotations of each toner cartridge's developer roller. The print operation will stop when either of the upper limits is reached. The upper limit is set above the number of dots or rotations that would be required for the cartridge to perform consistently with its advertised page yield. This function is intended to reduce the risk of poor print quality and damage to the machine.

There are two messages that indicate when the toner is low or needs replacing: Toner Low and Replace Toner.

Toner Low is displayed on the LCD when the number of dots or rotations of the developer roller nears its maximum count: Replace Toner is displayed on the LCD when the number of dots or rotations of the developer roller reaches its maximum count.

Color Correction

The number of developer roller rotations that are counted may not only be for normal operations, such as printing and copying, but also for machine adjustments, such as Color Calibration and Color Registration.

Color Calibration (Adjustment of Color Density)

To obtain stable print quality, the density of each toner cartridge needs to be maintained at a fixed value. If the density balance between the colors cannot be kept, the tint becomes unstable, and accurate color reproduction becomes unavailable. The toner density can change due to chemical changes to the toner that affect its electrical charge, deterioration of the developer unit, and temperature and humidity levels in the machine. During calibration, the density level adjustment test patterns are printed on the belt unit.

Calibration is mainly performed at the following times:

- When the user manually selects calibration from the operation panel or the printer driver.

  (Please perform calibration if color density needs to be improved.)
- When a used toner cartridge is replaced with a new one.
- When the machine detects that the ambient temperature and humidity have changed.
- When a specified number of printed pages is reached.

Color Registration (Correction of Color Position)

In this machine, the drum unit and developer unit are prepared for black (K), yellow (Y), magenta (M), and cyan (C), respectively. Four color images are combined into one image, and therefore color registration errors (for example, how the four color images align) might occur. When registration errors occur, registration correction test patterns are printed on the belt unit.

Registration is mainly performed at the following times:

- When the user manually selects registration from the operation panel.

  (Please perform registration if a color registration error needs to be corrected.)
- When a specified number of printed pages is reached.

Related Information

- Appendix

Brother Numbers

IMPORTANT

For technical help, you must call the country where you bought the machine. Calls must be made **from within** that country.

>> FAQs (Frequently Asked Questions)
>> For Customer Service
>> Ordering Accessories and Supplies

FAQs (Frequently Asked Questions)

The Brother Solutions Center is our one-stop resource for all your machine needs. Download the latest software and utilities and read FAQs and Troubleshooting tips to learn how to get the most from your Brother product.

Check here for Brother driver updates, too.

support.brother.com

For Customer Service

In USA:

www.brother-usa.com/support (FAQs, Self-Service, Email, and Chat)

1-877-BROTHER (1-877-276-8437)

In Canada:

www.brother.ca/support

(Self-Service Videos, Email, Chat, Facebook and Twitter Help)

If you have comments or suggestions, write us at:

In USA:

Printer Customer Support
Brother International Corporation
7905 North Brother Boulevard
Bartlett, TN 38133

In Canada:

Brother International Corporation (Canada), Ltd.
Customer Experience Team
1, rue Hotel de Ville Dollard-des-Ormeaux, PQ, Canada H9B 3H6

Service Center Locator (USA only)

For the location of a Brother authorized service center, call 1-877-BROTHER (1-877-276-8437) or visit www.brother-usa.com/service.

Service Center Locations (Canada only)

For the location of a Brother authorized service center, visit www.brother.ca/support.

Ordering Accessories and Supplies

For best quality results, use only genuine Brother supplies, which are available at most Brother retailers. If you cannot find the supplies you need and have a Visa, MasterCard, Discover, American Express credit card, or

PayPal account, you can order directly from Brother. Visit us online for a complete selection of the Brother accessories and supplies that are available for purchase.

NOTE

In Canada, only Visa and MasterCard are accepted.

In USA:

1-877-552-MALL (1-877-552-6255)

1-800-947-1445 (assistance via fax)

www.brothermall.com

In Canada:

www.brother.ca

Related Information

- Appendix

Brother International Corporation
200 Crossing Boulevard
P.O. Box 6911
Bridgewater, NJ 08807-0911 USA

Brother International Corporation (Canada) Ltd.
1 rue Hôtel de Ville,
Dollard-des-Ormeaux, QC, Canada H9B 3H6

Visit us on the World Wide Web
www.brother.com

Brother Earth
www.brotherearth.com

USA/CAN
Version B