LASERJET ENTERPRISE M806
LASERJET ENTERPRISE FLOW MFP M830

Troubleshooting Manual

M806dn

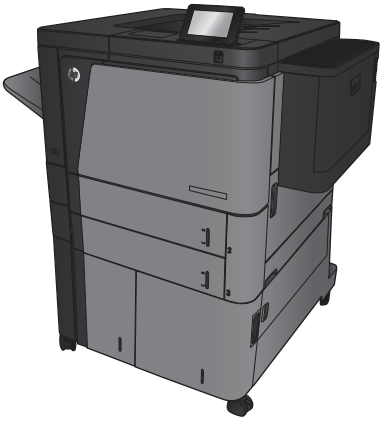

M806x+

M830z

HP LaserJet Enterprise M806 and Flow MFP M830

Troubleshooting Manual

Copyright and License

© 2013 Copyright Hewlett-Packard Development Company, L.P.

Reproduction, adaptation, or translation without prior written permission is prohibited, except as allowed under the copyright laws.

The information contained herein is subject to change without notice.

The only warranties for HP products and services are set forth in the express warranty statements accompanying such products and services. Nothing herein should be construed as constituting an additional warranty. HP shall not be liable for technical or editorial errors or omissions contained herein.

Part number: CZ244-90967

Edition 1, 11/2013

Conventions used in this guide

TIP: Tips provide helpful hints or shortcuts.

NOTE: Notes provide important information to explain a concept or to complete a task.

CAUTION: Cautions indicate procedures that you should follow to avoid losing data or damaging the product.

WARNING! Warnings alert you to specific procedures that you should follow to avoid personal injury, catastrophic loss of data, or extensive damage to the product.

Table of contents

1 Theory of operation 1
Basic operation 2
Sequence of operation 3
Normal sequence of operation 3
Formatter-control system 5
Formatter hardware 5
Control panel 6
Engine-control system 7
DC controller 8
Motors 11
Fans 12
Fuser-control circuit 13
Fuser heater protection 15
Low-voltage power supply 16
Over-current/over-voltage protection 18
High-voltage power supply 19
Laser/scanner system 21
Image-formation system 22
Image formation process 23
Toner cartridge 24
Toner cartridge design 24
No-shake toner 25
Toner cartridge memory chip 25
Toner seal 25
Toner level detection 25
Scanning/image capture system 26
Scanner 26
Document feeder system 27
Document feeder sensors 28
Document feeder simplex operation 29
Document feeder duplex operation 30
Document feeder paper control and deskew 32

Document feeder paper pick and separation 33
Document feeder paper stopper & fins 34
Document feeder simplex selector 35
Document feeder white backing 35
Document feeder duplex selector 36
Document feeder hinge 37
Pickup, feed, and delivery system 39
Photo sensors and switches 40
Motors and solenoids 42
Pickup and feed system 43
Media-size detection 43
Media-level detection 43
Multi-feed prevention 43
Transparency media detection 44
Fuser-wrapping jam detection 44
Tray 1 44
Tray 1 driver PCA 44
Tray 1 power supply 44
Tray 1 sequence of operation 45
Tray 1 pickup and feed 45
Tray 1 jam detection 45
Tray 2 and Tray 3 46
Tray 2 cassette pickup 46
Tray 2 cassette multiple-feed prevention 48
Tray 2 cassette media-size detection and Tray 2 cassette-presence detection 49
Tray 2 cassette lift-up operation 50
Tray media-presence detection 52
Jam detection 53
3,500-sheet high-capacity input (HCI) feeder 57
HCI electrical components 59
HCI motor control 61
HCI motor failure detection 62
HCI pickup-and-feed operation 63
HCI lift-up operation 64
HCI cassette media-size detection and cassette-presence detection 65
Additional HCI pickup and feed functions 65
HCI jam detection 66
Stapler/stacker and stapler/stacker with hole punch 68
Stapler/stacker motors 72
Motor failure detection 72

Feed-and-delivery operation 74
Switchback assembly 77
Straight feed 77
Switchback feed to the pass-through assembly/hole-puncher assembly (without hole punching operation) 78
Switchback feed to the hole-puncher assembly (with hole punching operation) 79
Hole puncher assembly 81
Side registration operation 82
Hole punching operation (2-hole/3-hole puncher assembly) 83
Hole punching operation (2-hole/4-hole puncher assembly) 85
Stapler/stacker assembly 87
Swing height control 90
Process output bin paper-stacking operation 91
Offset operation 91
Stack trailing-edge assist operation 94
Stack delivery operation 94
Staple operation 94
Shift the staple unit 100
Stack operation (stapler/stacker and booklet maker) 102
Output bin operation 102
Shutter operation 105
Jam detection 105
Stapler/stacker jam detection 105
Switchback assembly jam detection 106
Hole puncher assembly jam detection 108
Stapler/stacker assembly jam detection 109
Booklet maker 111
Electrical circuitry for the booklet maker unit 113
Basic operation of the booklet maker 113
Construction of the booklet-maker-unit control system 117
Booklet maker motors 118
Booklet maker paper feed and delivery 119
Booklet maker jam detection 125
Booklet maker delivery modes 126

2 Solve problems 127
Solve problems checklist 128
Menu map 130
Preboot menu options 131
Current settings pages 138

Troubleshooting process 139
Determine the problem source 139
Troubleshooting flowchart 139
Power subsystem 140
Power-on checks 140
Power-on troubleshooting overview 140
Control-panel checks 141
Control-panel diagnostic flowcharts 144
Touchscreen black, white, or dim (no image) 145
Touchscreen is slow to respond or requires multiple presses to respond 146
Touchscreen has an unresponsive zone 147
No control-panel sound 148
Home button is unresponsive 149
Hardware integration pocket (HIP) is not functioning (control panel functional) 150
Scanning subsystem 150
Tools for troubleshooting 151
Individual component diagnostics 151
LED diagnostics 151
Understand lights on the formatter 151
Engine diagnostics 156
Defeating interlocks 156
Disable cartridge check 157
Engine test button 158
Paper path test 158
Paper path sensors test 159
Manual sensor and tray/bin manual sensor tests 160
Manual sensor test 160
Tray/bin manual sensor test 161
Print/stop test 163
Component tests 163
Control-panel tests 163
Component test (special-mode test) 164
Finishing accessory component test 166
Scanner tests M830 202
Scanner tests 202
Diagrams 204
Block diagrams 205
Location of connectors 215
DC controller PCA connectors 215

High capacity input (HCI) feeder controller PCA connectors 217
Finishing accessories (all) controller PCA connectors 218
Plug/jack locations 220
Locations of major components 222
Base product 222
High capacity input (HCI) feeder 227
Finishing accessories 231
General timing chart 234
Circuit diagrams 235
Internal print-quality test pages 245
Print quality troubleshooting pages 245
Fuser test page 247
Cleaning page 248
Enable and configure auto cleaning 248
Print configuration page 249
Configuration page 249
HP embedded Jetdirect page 251
Finding important information on the configuration pages 253
Print quality troubleshooting tools 254
Repetitive defects ruler 254
Control-panel menus 255
Administration menu 255
Reports menu 255
General Settings menu 257
Copy Settings menu (M830 only) 266
Scan/Digital Send Settings menu (M830 only) 273
Fax Settings menu (M830 only) 284
General Print Settings menu 297
Default Print Options menu 300
Display Settings menu 302
Manage Supplies menu 304
Manage Trays menu 308
Network Settings menu 310
Troubleshooting menu 322
Device Maintenance menu 325
Backup/Restore menu 325
Calibration/Cleaning menu (M830) 325
Calibration/Cleaning menu (M806) 328
USB Firmware Upgrade menu 329
Service menu 329
Interpret control-panel messages and event log entries 329

10.XX.YZ Error Messages 329
10.00.00 e-Label Memory Error 329
10.00.10 e-Label Missing Memory Error 330
10.00.50 Cartridge seal roll up error 330
10.23.50 330
10.23.51 331
10.23.52 331
10.23.70 Printing Past Very Low 331
10.32.00 Unauthorized supply 331
10.XX.33 Used Supply In Use 332
10.XX.34 Used Supply In Use 332
10.XX.40 Genuine HP Supplies Installed 332
10.XX.41 Unsupported Supply in Use 332
10.XX.70 Printing past very low 332
10.YY.15 Install <supply> 333
10.YY.35 Incompatible <supply> 333
11.XX.YZ Error Messages 333
11.00.01 or 11.00.02 Internal clock error 333
13.XX.YZ Error Messages 334
13.60.Az 334
13.60.Dz 334
13.60.FF 336
13.64.Az 336
13.64.Dz 337
13.67.Az 338
13.67.Dz 338
13.67.FF 339
13.68.Az 340
13.68.Dz 340
13.69.Az 341
13.69.Dz 342
13.84.Az 342
13.89.3z 343
13.90.Az 343
13.90.Dz 344
13.92.FF 345
13.94.Az 346
13.94.Dz 346
13.96.33 347
13.97.33 347
13.98.A3 348

13.98.D3 348
13.A1.D1 348
13.A1.FF 349
13.A2.D2 349
13.A2.FF 350
13.A3.D3 351
13.A3.FF 351
13.A4.D4 352
13.A4.FF 353
13.A5.D5 353
13.A5.FF 354
13.A7.D4 355
13.A7.D5 356
13.A7.FF 356
13.A8.D2 357
13.A8.D3 358
13.A8.D4 or 13.A8.D4 358
13.AA.EE 359
13.AB.EE 359
13.B2.Az 360
13.B2.Dz 361
13.B2.FF 362
13.B4.FF 363
13.B9.Az 363
13.B9.Bz 364
13.B9.Cz 365
13.B9.Dz 367
13.B9.FF 368
13.BA.EE 368
13.BB.EE 369
13.D1.Az 369
13.D1.Dz 370
13.D1.FF 372
13.D2.Az 372
13.D2.Dz 373
13.D2.FF 373
13.D4.Az 374
13.D4.Dz 374
13.E1.Dz 375
13.E1.FF 376
13.E6.Az 377

13.E6.Dz 378
13.E6.FF 379
13.EA.EE 379
13.FF.FF 380
30.XX.YZ Error Messages 380
30.01.01 380
30.01.06 380
30.01.08 381
30.01.10 (event code) Scanner ADF fan error 381
30.01.14 381
30.01.15 382
30.01.18 382
30.01.19 382
30.01.23 Scanner calibration failure 382
30.01.30 or 30.01.32 383
30.01.36 383
30.01.41 383
30.01.42 383
30.01.43 384
30.01.44 384
30.01.45 384
30.01.46 385
30.01.47 385
30.01.48 385
30.01.49 385
30.01.50 386
30.03.14 386
30.03.20 386
30.03.22 386
30.03.23 387
30.03.30 387
30.03.45 387
31.01.02 Jam in document feeder 387
31.01.03 Document feeder pick error 388
31.XX.YZ Error Messages 389
31.03.30 389
31.03.31 390
31.03.32 390
31.08.A1 390
31.08.A2 390
31.08.A3 391

31.13.01 391
31.13.02 391
31.13.13 392
31.13.14 392
31.13.15 393
32.08.XX Error Messages 393
32.08.A1, 32.08.A2, 32.08.A3 393
32.1C.XX 393
40.XX.YZ Error Messages 399
40.00.01 USB I/O buffer overflow To continue, touch “OK” 399
40.00.02 Embedded I/O buffer overflow To continue, touch “OK” .. 399
40.00.03 EIO <X> buffer overflow To continue, touch “OK” 399
40.00.04 EIO <X> bad transmission To continue, touch “OK” ……. 399
40.00.05 Embedded I/O bad transmission To continue, touch “OK” 399
40.08.0X USB storage accessory removed 400
40.0X.05 USB storage accessory removed 400
41.XX.YZ Error Messages 400
41.01.YZ 400
41.02.00 401
41.03.FZ Unknown Misprint Error 402
41.03.YZ Unexpected size in envelope feeder To use another tray, touch "Options " 402
41.03.YZ Unexpected size in tray <X> 403
41.04.00 Printer Error 404
41.05.YZ Unexpected type in tray <X> 404
41.XX.YZ Error To continue, touch “OK” 405
42.XX.YY Error Messages 406
42.XX.YY Error Event Log message 406
44.XX.XX Error Messages 406
44.01.XX Error Event log message (MFP Only) 406
44.03.XX Error Event log message (MFP Only) 406
44.10.XX Error Event log message (MFP Only) 406
44.34.XX Error Event log message (MFP Only) 407
44.92.XX Error Event log message (MFP Only) 407
47.XX.XX Error Messages 407
47.00.XX 407
47.01.XX 407
47.02.XX 408
47.03.XX 408
47.04.XX 408

47.05.00 408
47.06.XX 409
47.WX.YZ Printer Calibration Failed To continue, touch “OK” 409
48.XX.YY Error Messages 409
48.XX.YY 409
49.XX.YY Error Messages 410
49.XX.YY Error To continue turn off then on 410
50.WX.YZ Error Messages 411
50.WX.YZ Fuser error To continue turn off then on 411
51.XX.YZ, 52.XX.YZ Error Messages 415
51.00.10 Beam detect error 415
51.00.19 / 51.00.20 Laser Scanner Error - Laser malfunction 416
52.00.00/52.00.20 Scanner Startup/Rotation error 416
54.XX.YZ Error Messages 416
54.00.03 (EVENT LOG ONLY) 416
54.06.21 (EVENT LOG ONLY) 417
55.XX.YZ, 56.XX.YZ Error Messages 417
55.00.01, 55.00.03, 55.00.04 DC controller error 417
55.01.06, 55.02.06 DC controller error 417
56.00.YY Error 418
57.XX.YZ Error Messages 418
57.00.01 Error To continue turn off then on 418
57.00.02 Error To continue turn off then on 418
57.00.03 Error To continue turn off then on 419
57.00.03 Error To continue turn off then on 419
57.00.04 Error To continue turn off then on 419
57.00.04 Error To continue turn off then on 420
57.00.05 Error To continue turn off then on 420
57.00.06 Error To continue turn off then on 420
57.00.07 Error To continue turn off then on 421
57.00.08 Error To continue turn off then on 421
57.00.09 Error To continue turn off then on 421
57.00.10 Error To continue turn off then on 421
59.XX.YZ Error Messages 422
59.00.30 or 59.00.40 422
59.05.50 or 59.05.60 422
60.00.0Y, 62.00.00 Error Messages 423
60.00.02 Tray 2 lifting error 423
60.00.03 Tray 3 lifting error 423
60.00.04 Tray 4 lifting error 424
60.00.05 Tray 5 lifting error 424

62.00.00 No system To continue turn off then on 425
65.X0.AZ Error Messages 425
65.X0.AZ Output accessory Failure 425
66.WX.YZ Error Messages 426
66.00.20 426
66.00.40 426
66.00.50 427
66.00.77 427
66.00.79 427
66.00.8Z 428
66.12.46 428
66.40.YZ 429
66.50.00 429
66.60.16 430
66.60.25 430
66.60.27 431
66.60.28 431
66.60.31 431
66.60.32 433
66.60.33 434
66.60.34 435
66.60.48 435
66.60.50 436
66.80.01 436
66.80.02 436
66.80.03 437
66.80.21 438
66.80.22 438
66.80.23 438
66.80.33 438
66.80.35 438
66.80.36 439
66.80.38 440
66.80.46 440
66.80.51 441
66.80.55 441
66.80.56 441
66.80.57 442
66.80.58 442
66.80.59 442
66.80.60 442

66.80.61 442
66.80.62 442
66.80.63 443
66.80.64 443
66.80.65 443
66.80.70 443
66.80.71 443
66.80.72 443
66.80.73 444
66.80.74 444
66.80.75 444
66.80.76 444
66.90.10 444
66.90.29 445
66.90.30 446
66.90.41 447
66.90.42 448
66.90.43 449
66.90.44 449
66.90.45 450
66.90.49 451
66.90.50 452
69.11.YZ 452
70.XX.YY Error Messages 453
70.00.00 Error To continue turn off then on 453
80.XX.YY, 82.XX.YY Error Messages 453
80.0X.YY Embedded Jetdirect Error 453
82.73.46, 82.73.47 454
98.0X.0Y Error Messages 454
98.00.01 or 98.01.00 Corrupt data in firmware volume 454
98.00.02 Corrupt data in the solutions volume 454
98.00.03 Corrupt data in the configuration volume 455
98.00.04 Corrupt data in the job data volume 455
99.XX.YY Error Messages 455
99.00.01 Upgrade not performed file is corrupt 455
99.00.02 Upgrade not performed timeout during receive 455
99.00.03 Upgrade not performed error writing to disk 456
99.00.04 Upgrade not performed timeout during receive 456
99.00.05 Upgrade not performed timeout during receive 456
99.00.06 Upgrade not performed error reading upgrade 456
99.00.07 Upgrade not performed error reading upgrade 457

99.00.08 Upgrade not performed error reading upgrade 457
99.00.09 Upgrade canceled by user 457
99.00.10 Upgrade canceled by user 457
99.00.11 Upgrade canceled by user 458
99.00.12 Upgrade not performed the file is invalid 458
99.00.13 Upgrade not performed the file is invalid 458
99.00.14 Upgrade not performed the file is invalid 458
99.00.2X 458
99.01.XX 459
99.02.01 460
99.02.09 460
99.09.60 Unsupported disk 460
99.09.61 Unsupported disk 460
99.09.62 Unknown disk 460
99.09.63 Incorrect disk 461
99.09.64 Disk malfunction 461
99.09.65 Disk data error 461
99.09.66 No disk installed 461
99.09.67 Disk is not bootable please download firmware 461
99.09.67 Disk is not bootable please download firmware 462
99.XX.YY 462
Alpha Error Messages 462
<binname> full Remove all paper from bin 462
<Supply> low OR Supplies low 462
<Supply> very low OR Supplies very low 463
<Tray X> lifting 463
[File System] device failure To clear touch “OK” 464
[File System] file operation failure To clear touch “OK” 464
[File System] file system is full To clear touch “OK” 464
[File System] is not initialized 464
[File System] is write protected 464
Accept bad signature 464
ADF not detected 465
Bad duplexer connection 465
Bad optional tray connection 465
Calibration reset pending 465
Canceling 465
Canceling...<jobname> 466
Cartridge Low 466
Cartridge Memory Abnormal 466
Cartridge Out 466

Checking engine 466
Checking paper path 467
Chosen personality not available To continue, touch “OK” 467
Clearing event log 467
Clearing paper path 467
Close Front door 467
Close Left door 468
Close Lower Right door 468
Close stapler/stacker multi bin mailbox door 468
Close top cover 469
Close Upper Right Door 469
Cooling device 469
Data received To print last page press “OK” 469
Different paper sizes in job 470
EIO <X> disk initializing 470
EIO <X> disk not functional 470
EIO <X> disk spinning up 470
Event log is empty 470
Expected drive missing 471
External device initializing 471
Fax is disabled — ignoring call 471
FIM Load Error Send full FIM on <X> port 471
Flatbed cover open or Close Flatbed cover 471
Fuser Kit low 472
Fuser Kit very low To continue, touch “OK” 472
Gateways failed 472
Gateways OK 472
Genuine HP cartridge installed 472
Genuine HP supply installed 473
HP Secure hard drive disabled 473
Incompatible <Supply> 473
Incompatible supplies 473
Initializing... 473
Install fuser unit 474
Install supply 474
Internal disk device failure To clear touch “OK” 474
Internal disk file operation failed 474
Internal disk file system is full 475
Internal disk is write protected 475
Internal disk not found 475
Internal disk not functional 475

Internal disk not initialized 475
Internal disk spinning up 475
Jam in document feeder 476
Job not stapled due to mixed sizes 476
Load Tray <X>: [Type], [Size] To use another tray, press “OK” 476
Loading program <XX> 476
Lower left booklet bin full 477
Manually feed output stack Then touch "OK" to print second side . 477
Manually feed: <Type><Size> To use another tray, press “OK” 477
Moving solenoid 477
Moving solenoid and motor 477
No job to cancel 478
Non HP Supply Installed 478
Output Bin Full 478
Output Device detached 478
Paused... 479
Performing Paper Path Test… 479
Please Wait... 479
Printing Configuration... 479
Printing Event Log... 479
Printing File Directory... 479
Printing Font List... 480
Printing Fuser Test Page... 480
Printing Help Page... 480
Printing Menu Map... 480
Printing stopped 480
Printing Supplies Status Page... 480
Printing Usage Page... 481
Printing…engine test 481
Processing job from tray <X>...Do not grab paper until job completes 481
Processing... 481
Processing...copy <X> of <Y> 481
RAM disk device failure To clear touch “OK” 481
RAM disk file operation failed To clear touch “OK” 482
RAM disk file system is full To clear touch “OK” 482
RAM disk is write protected To clear touch “OK” 482
RAM disk not initialized 482
Ready 482
Ready <IP Address> 482
Receiving Upgrade 483

Reinsert duplexer 483
Remove one toner cartridge 483
Remove USB accessory 483
Replace <Supply> 483
Replace supplies 484
Resend external accessory firmware 484
Resend Upgrade 485
Restore Factory Settings 485
ROM disk device failed To clear touch “OK” 485
ROM disk file operation failed To clear touch “OK” 485
ROM disk file system is full To clear touch “OK” 485
ROM disk is write protected To clear touch “OK” 485
ROM disk not initialized To clear touch “OK” 486
Rotating Motor 486
Size mismatch in Tray <X> 486
Sleep mode on 486
Staple Cartridge 2 and 3 very low (warning) 486
Staple Cartridge <X> low (warning) 487
Staple Cartridge low 487
Stapler/Stacker staple jam 487
Supplies low 487
Supply Memory Warning 487
The unit has corrupt data 487
Too many pages in job to staple 488
Too many pages to make booklet 488
Tray <X> [type] [size] 488
Tray <X> empty: [Type], [Size] 488
Tray <X> lifting 489
Tray <X> open 489
Tray <X> overfilled 490
Type mismatch Tray <X> 490
Unsupported drive installed To continue, touch “OK” 490
Unsupported supply in use OR Unsupported supply installed To continue, touch “OK” 491
Unsupported tray configuration 491
Unsupported USB accessory detected Remove USB accessory ... 491
Upgrade Error 491
Upper left bin full 491
USB accessory not functional 492
USB hubs are not fully supported Some operations may not work properly 492

USB is write protected To clear touch “OK” 492
USB needs too much power 492
USB needs too much power Remove USB and Then Turn Off then On 492
USB not initialized 493
USB storage accessory removed Clearing any associated data 493
USB storage device failure To clear touch “OK” 493
USB storage file operation failed To clear touch “OK” 493
USB storage file system is full To clear touch “OK” 493
Used supply installed To continue, touch “OK” OR Used supply in use Description 494
Verifying, Please Wait 494
Waiting for Tray <X> to lift 494
Windows Login Required to Use this Feature 494
Event log messages 494
Print or view an event log 495
Clear an event log 495
Clear jams 496
Auto-navigation for clearing jams 496
Experiencing frequent or recurring paper jams? 496
Clear jams in the front door 497
Clear jams in Tray 1 500
Clear jams in the right door 503
Clear jams in Tray 2 and Tray 3 506
Clear jams in Tray 4 and Tray 5 507
Clear jams in the duplexer 511
Clear jams in the left door (fuser area) 516
Clear jams in the output bin area (M806 only) 519
Clear jams in the stapler/stacker accessory 521
Clear jams in the stapler/stacker 521
Clear connection jams 522
Clear Staple 1 jams 523
Clear jams in the stapler/stacker with hole punch accessory 527
Clear top left door jams in the stapler/stacker with hole punch accessory 527
Clear a connection jam in the stapler/stacker with hole punch accessory 530
Clear Staple 1 jams 534
Clear jams in the booklet maker accessory 538
Clear jams in the front left door of the booklet maker 538
Clear connection jams 541
Clear Staple 1 jams 542
Clear staple jams in the booklet maker 544

Paper feeds incorrectly or becomes jammed 549
The product does not pick up paper 549
The product picks up multiple sheets of paper 549
The document feeder jams, skews, or picks up multiple sheets of paper (M830) 549
Prevent paper jams 550
Use manual print modes 551
Solve image quality problems 553
Image defects table 553
Clean the product 558
Print a cleaning page 558
Check the scanner glass for dirt or smudges (M830) 558
Clean the pickup rollers and separation pad in the document feeder (M830) 560
Solve performance problems 561
Solve connectivity problems 562
Solve USB connection problems 562
Solve wired network problems 562
Poor physical connection 562
The computer is using the incorrect IP address for the product 562
The computer is unable to communicate with the product 563
The product is using incorrect link and duplex settings for the network 563
New software programs might be causing compatibility problems 563
The computer or workstation might be set up incorrectly 563
The product is disabled, or other network settings are incorrect 563
Service mode functions 564
Service menu 564
Product resets 567
Restore factory-set defaults 567
Restore the service ID 568
Product cold reset 568
Format Disk and Partial Clean functions 569
Active and repository firmware locations 569
Partial Clean 569
Execute a Partial Clean 570
Format Disk 570
Execute a Format Disk 571
Solve fax problems 572
Checklist for solving fax problems 572
What type of phone line are you using? 572
Are you using a surge-protection device? 572
Are you using a phone company voice-messaging service or an answering machine? 572

Does your phone line have a call-waiting feature? 573
Check fax accessory status 573
General fax problems 574
The fax failed to send 574
An Out of Memory status message displays on the product control panel 574
Print quality of a photo is poor or prints as a gray box 574
You touched the Stop button to cancel a fax, but the fax was still sent 574
No fax address book button displays 574
Not able to locate the Fax settings in HP Web Jetadmin 574
The header is appended to the top of the page when the overlay option is enabled 574
A mix of names and numbers is in the recipients box 574
A one-page fax prints as two pages 575
A document stops in the document feeder in the middle of faxing 575
The volume for sounds coming from the fax accessory is too high or too low 575
Product upgrades 576
Determine the installed revision of firmware 576
Perform a firmware upgrade 576
HP Embedded Web Server 576
USB flash drive (Preboot menu) 577
USB flash drive (control-panel menu) 578

Appendix A Service and support 579
Hewlett-Packard limited warranty statement 580
HP's Premium Protection Warranty: LaserJet toner cartridge limited warranty statement 581
HP policy on non-HP supplies 582
HP anticounterfeit Web site 583
Data stored on the toner cartridge 584
End User License Agreement 585
OpenSSL 588
Customer self-repair warranty service 589
Customer support 590

Appendix B Product specifications 591
Physical specifications 592
HP LaserJet Enterprise M806 592
HP LaserJet Enterprise Flow M830 592
Finishing accessories 593
Power consumption, electrical specifications, and acoustic emissions 593
Environmental specifications 593

Appendix C Regulatory information 595
FCC regulations 596
Environmental product stewardship program 597
Protecting the environment 597
Ozone production 597
Power consumption 597
Paper use 597
Plastics 597
HP LaserJet print supplies 597
Return and recycling instructions 598
United States and Puerto Rico 598
Multiple returns (more than one cartridge) 598
Single returns 598
Shipping 598
Non-U.S. returns 599
Paper 599
Material restrictions 599
Disposal of waste equipment by users 600
Electronic hardware recycling 600
Chemical substances 600
Material Safety Data Sheet (MSDS) 600
EPEAT 600
For more information 600
Declaration of conformity (M806) 601
Declaration of conformity (M830) 603
Certificate of Volatility (M806) 605
Certificate of Volatility (M830) 607
Safety statements 609
Laser safety 609
Canada - Industry Canada ICES-003 Compliance Statement 609
VCCI statement (Japan) 609
Power cord instructions 609
Power cord statement (Japan) 609
EMC statement (China) 610
EMC statement (Korea) 610
EMI statement (Taiwan) 610
Laser statement for Finland 610
GS statement (Germany) 612
Substances Table (China) 612
SEPA Ecolabel User Information (China) 612
Restriction on Hazardous Substances statement (Turkey) 613

Restriction on Hazardous Substances statement (Ukraine) 613
Eurasian Conformity (Belarus, Kazakhstan, Russia) 613
Additional statements for telecom (fax) products 614
EU Statement for Telecom Operation 614
New Zealand Telecom Statements 614
Additional FCC statement for telecom products (US) 614
Telephone Consumer Protection Act (US) 615
Industry Canada CS-03 requirements 615
Vietnam Telecom wired/wireless marking for ICTQC Type approved products 616
Japan Telecom Mark 616

Index 617

List of tables

Table 1-1 Sequence of operation (product base) ... 3
Table 1-2 Formatter hardware components ... 5
Table 1-3 Electrical components ... 8
Table 1-4 Motors ... 11
Table 1-5 Fans ... 12
Table 1-6 Fuser components ... 13
Table 1-7 Fuser control functions ... 15
Table 1-8 Low-voltage power supply functions ... 18
Table 1-9 High-voltage power supply circuits ... 20
Table 1-10 Image formation process ... 23
Table 1-11 Toner cartridge components ... 24
Table 1-12 Document feeder sensors ... 28
Table 1-13 Photo sensors and switches ... 40
Table 1-14 Motors and solenoids (paper path) ... 42
Table 1-15 Tray 1 jam detection ... 45
Table 1-16 Stapler/stacker delivery modes ... 49
Table 1-17 Jam detection sensors ... 53
Table 1-18 Jams detected by the DC controller ... 54
Table 1-19 Jam detection ... 55
Table 1-20 HCI electrical components ... 58
Table 1-21 HCI electrical components ... 59
Table 1-22 HCI motors ... 61
Table 1-23 HCI motor failures ... 62
Table 1-24 Additional HCI Pickup and feed functions ... 65
Table 1-25 Stapler/stacker delivery modes ... 69
Table 1-26 Stapler/stacker with hole punch delivery modes ... 70
Table 1-27 Stapler/stacker motors ... 72
Table 1-28 Stapler/stacker failure detection ... 73
Table 1-29 Feed-and-delivery electrical components ... 75
Table 1-30 Motors for the stack job offset ... 93
Table 1-31 Sensors used in stapling ... 95
Table 1-32 Motors used in stapling ... 96

Table 1-33 Output-bin-1-shift area sensor PCA 104
Table 1-34 Output-bin-2-shift area sensor PCA 104
Table 1-35 Delivery modes 111
Table 1-36 Booklet maker motors 118
Table 1-37 Booklet maker motors 121
Table 1-38 Booklet maker sensors 122
Table 1-39 Booklet maker jam sensors 125
Table 1-40 Booklet maker delivery modes 126
Table 2-1 Preboot menu options (1 of 6) 131
Table 2-2 Preboot menu options (2 of 6) 133
Table 2-3 Preboot menu options (3 of 6) 134
Table 2-4 Preboot menu options (4 of 6) 135
Table 2-5 Preboot menu options (5 of 6) 135
Table 2-6 Preboot menu options (6 of 6) 136
Table 2-7 Troubleshooting flowchart 139
Table 2-8 Control-panel diagnostic functions 141
Table 2-9 Product environment spacing 151
Table 2-10 Heartbeat LED, product initialization 152
Table 2-11 Heartbeat LED, product operational 155
Table 2-12 Paper-path sensors diagnostic tests 159
Table 2-13 Manual sensor diagnostic tests 161
Table 2-14 Tray/bin manual sensors 162
Table 2-15 Component test details 164
Table 2-16 Motors and solenoids (paper path) 205
Table 2-17 Photo switches and sensors (product base) 207
Table 2-18 Document feeder sensors 208
Table 2-19 Jam sensors (product base) 210
Table 2-20 High capacity input (HCI) feeder jam sensors 211
Table 2-21 High capacity input (HCI) feeder cross section 212
Table 2-22 Stapler/stacker (SS) and Stapler/stacker with hole punch (SSHP) cross section 213
Table 2-23 Booklet maker (BM) cross section 214
Table 2-24 DC controller PCA connectors 215
Table 2-25 High capacity input (HCI) feeder controller PCA connectors 217
Table 2-26 Finishing accessories (all) controller PCA connectors 218
Table 2-27 Plug/jack locations (M806) 220
Table 2-28 Plug/jack locations (M830) 220
Table 2-29 M830 product integrated scanner assembly (ISA) 222
Table 2-30 Base product covers 223
Table 2-31 Base product main assemblies (1 of 3) 224
Table 2-32 Base product main assemblies (2 of 3) 225
Table 2-33 Base product main assemblies (3 of 3) 226

Table 2-34 High capacity input (HCI) feeder covers 227
Table 2-35 High capacity input (HCI) feeder main assemblies (1 of 3) 228
Table 2-36 High capacity input (HCI) feeder main assemblies (2 of 3) 229
Table 2-37 High capacity input (HCI) feeder main assemblies (3 of 3) 230
Table 2-38 Stapler/stacker and stapler/stacker with hole punch covers 231
Table 2-39 Booklet maker only covers 232
Table 2-40 Finishing accessories main assemblies 233
Table 2-41 Important information on the configuration pages 253
Table 2-42 Reports menu 255
Table 2-43 General Settings menu 257
Table 2-44 Copy Settings menu (M830 only) 266
Table 2-45 Scan/Digital Send Settings menu (M830 only) 273
Table 2-46 Fax Settings menu (M830 only) 284
Table 2-47 General Print Settings menu 297
Table 2-48 Default Print Options menu 300
Table 2-49 Display Settings menu 302
Table 2-50 Manage Supplies menu 304
Table 2-51 Manage Trays menu 308
Table 2-52 Network Settings menu 310
Table 2-53 Jetdirect Menu 310
Table 2-54 Troubleshooting menu 322
Table 2-55 Backup/Restore menu 325
Table 2-56 Calibration/Cleaning menu (M830) 326
Table 2-57 Calibration/Cleaning menu 328
Table 2-58 Print modes under the Adjust Paper Types submenu 551
Table 2-59 MP modes under the Optimize submenu 552
Table 2-60 Image defects table 553
Table 2-61 Solve performance problems 561
Table B-1 Physical specifications, with toner cartridge 592
Table B-2 Product dimensions with all doors and trays fully opened 592
Table B-3 Physical specifications, with toner cartridge 592
Table B-4 Product dimensions with all doors, trays, and document feeder fully opened 592
Table B-5 Accessory specifications 593
Table B-6 Accessory dimensions with all doors and trays fully opened 593
Table B-7 Operating-environment specifications 593

List of figures

Figure 1-1 Relationship between the main product systems 2
Figure 1-2 Engine-control system 7
Figure 1-3 DC controller block diagram 8
Figure 1-4 Fuser-control circuit 13
Figure 1-5 Fuser system block diagram 14
Figure 1-6 Low-voltage power supply 16
Figure 1-7 High-voltage power supply 20
Figure 1-8 Laser/scanner system 21
Figure 1-9 Image formation process 23
Figure 1-10 Layout of the toner cartridge 24
Figure 1-11 Document feeder cross section 27
Figure 1-12 Document feeder sensor positions 28
Figure 1-13 Simplex operation paper path 29
Figure 1-14 Duplex operation paper path 30
Figure 1-15 Deskew rollers and width adjust 32
Figure 1-16 Separation angled ramp, separation roller, and separation pad 33
Figure 1-17 Paper stopper 34
Figure 1-18 White backing and simplex selector 35
Figure 1-19 Duplex selector 36
Figure 1-20 Document feeder closed (book mode) 37
Figure 1-21 Document feeder open (max opening 70º) 38
Figure 1-22 Pickup, feed, and delivery system blocks 39
Figure 1-23 Photo sensors and switches 40
Figure 1-24 Motors and solenoids (paper path) 42
Figure 1-25 Tray 1 operations 44
Figure 1-26 Tray 2 cassette pickup operation 47
Figure 1-27 Tray 2 cassette multiple-feed prevention 48
Figure 1-28 Tray 2 cassette lift-up operation 51
Figure 1-29 Tray 2 cassette media-presence detection 52
Figure 1-30 Sensors for jam detection 53
Figure 1-31 HCI paper path 57
Figure 1-32 HCI signal flow 58

Figure 1-33 HCI electrical components 59
Figure 1-34 HCI motors 61
Figure 1-35 HCI pickup-and-feed components 63
Figure 1-36 HCI lift-up operation mechanism 64
Figure 1-37 HCI jam sensor location 66
Figure 1-38 Stapler/stacker paper path 68
Figure 1-39 Hole punch paper path 69
Figure 1-40 Stapler/stacker controller signal flow diagram 71
Figure 1-41 Stapler/stacker feed-and-delivery electrical components 74
Figure 1-42 Hole punch feed-and-delivery electrical components 75
Figure 1-43 Straight feed 78
Figure 1-44 Switchback feed to the pass-through assembly/hole-puncher assembly (without hole punching operation) 79
Figure 1-45 Switchback feed to the hole-puncher assembly (with hole punching operation) 80
Figure 1-46 Hole-puncher assembly 81
Figure 1-47 Operation of 4-hole punching 86
Figure 1-48 Paper path when set to non-sort 87
Figure 1-49 Paper path for sizes other than A4, B5, or LTR 88
Figure 1-50 Paper path (1 of 5) 89
Figure 1-51 Paper path (2 of 5) 89
Figure 1-52 Paper path (3 of 5) 89
Figure 1-53 Paper path (4 of 5) 90
Figure 1-54 Paper path (5 of 5) 90
Figure 1-55 Stapler/stacker assembly 91
Figure 1-56 Process output bin 91
Figure 1-57 Motors and sensors for stack job offset 92
Figure 1-58 Stack job offset example 92
Figure 1-59 Job offset operation (1 of 2) 92
Figure 1-60 Job offset operation (2 of 2) 93
Figure 1-61 Stack trailing-edge assist operation 94
Figure 1-62 Stack delivery 94
Figure 1-63 Stapler unit 95
Figure 1-64 Staple location 95
Figure 1-65 Paper path for stapling 96
Figure 1-66 Rollers and sensors for stapling 97
Figure 1-67 Staple paper path 97
Figure 1-68 Shift process for the staple unit 98
Figure 1-69 Stapling operation (1 of 2) 98
Figure 1-70 Stapling operation (2 of 2) 99
Figure 1-71 Front 1-point stapling 100
Figure 1-72 Rear 1-point stapling 100

Figure 1-73 2-point stapling 101
Figure 1-74 Items detected by the area sensors) 103
Figure 1-75 Output-bin components 104
Figure 1-76 Shutter location 105
Figure 1-77 Jam detection sensors 106
Figure 1-78 Switchback assembly sensors 107
Figure 1-79 Hole-punch assembly sensors 108
Figure 1-80 Stapler/stacker assembly sensors 109
Figure 1-81 Booklet maker paper path 111
Figure 1-82 Booklet maker signal flow 113
Figure 1-83 Paper delivery for booklet maker 114
Figure 1-84 Alignment plates 114
Figure 1-85 Stitching the stack 115
Figure 1-86 Position the stack 116
Figure 1-87 Fold and deliver the stack 117
Figure 1-88 Booklet maker motors 118
Figure 1-89 Feed drive for the booklet maker 119
Figure 1-90 Booklet-maker-unit paper path 120
Figure 1-91 Booklet maker motors 121
Figure 1-92 Booklet maker sensors 122
Figure 1-93 Booklet maker switches and microswitches 124
Figure 1-94 Detecting jams in the booklet maker unit 125
Figure 2-1 Touchscreen blank, white, or dim (no image) 145
Figure 2-2 Touchscreen is slow to respond or requires multiple presses to respond 146
Figure 2-3 Touchscreen has an unresponsive zone 147
Figure 2-4 No control-panel sound 148
Figure 2-5 Home button is unresponsive 149
Figure 2-6 Hardware integration pocket (HIP) is not functioning (control panel functional) 150
Figure 2-7 Defeating interlocks (1 of 2) 156
Figure 2-8 Defeating interlocks (2 of 2) 157
Figure 2-9 Engine test button 158
Figure 2-10 Finishing controller PCA switches 167
Figure 2-11 Booklet maker (BM) saddle controller PCA switches 168
Figure 2-12 Stapler/stacker with hole punch (SSHP) punch controller PCA switches 169
Figure 2-13 Motors and solenoids (product base) 205
Figure 2-14 Rollers (product base) 206
Figure 2-15 Switches and sensors (product base) 207
Figure 2-16 Document feeder sensors (M830 only) 208
Figure 2-17 Jam sensors (product base) 210
Figure 2-18 High capacity input (HCI) feeder jam sensors 211
Figure 2-19 High capacity input (HCI) feeder cross section 212

Figure 2-20 Stapler/stacker (SS) and Stapler/stacker with hole punch (SSHP) cross section 213
Figure 2-21 Booklet maker (BM) cross section 214
Figure 2-22 DC controller PCA connectors 215
Figure 2-23 High capacity input (HCI) feeder controller PCA connectors 217
Figure 2-24 Finishing accessories (all) controller PCA connectors 218
Figure 2-25 Plug/jack locations (M806) 220
Figure 2-26 Plug/jack locations (M830) 220
Figure 2-27 M830 product integrated scanner assembly (ISA) 222
Figure 2-28 Base product covers 223
Figure 2-29 Base product main assemblies (1 of 3) 224
Figure 2-30 Base product main assemblies (2 of 3) 225
Figure 2-31 Base product main assemblies (3 of 3) 226
Figure 2-32 High capacity input (HCI) feeder covers 227
Figure 2-33 High capacity input (HCI) feeder main assemblies (1 of 3) 228
Figure 2-34 High capacity input (HCI) feeder main assemblies (2 of 3) 229
Figure 2-35 High capacity input (HCI) feeder main assemblies (3 of 3) 230
Figure 2-36 Stapler/stacker and stapler/stacker with hole punch covers 231
Figure 2-37 Booklet maker only covers 232
Figure 2-38 Finishing accessories main assemblies 233
Figure 2-39 General timing chart 234
Figure 2-40 General circuit diagram, product base (1 of 3) 235
Figure 2-41 General circuit diagram, product base (2 of 3) 236
Figure 2-42 General circuit diagram, product base (3 of 3) 237
Figure 2-43 General circuit diagram, high capacity input (HCI) feeder 238
Figure 2-44 General circuit diagram, finishing accessories (1 of 6) 239
Figure 2-45 General circuit diagram, finishing accessories (2 of 6) 240
Figure 2-46 General circuit diagram, finishing accessories (3 of 6) 241
Figure 2-47 General circuit diagram, finishing accessories (4 of 6) 242
Figure 2-48 General circuit diagram, finishing accessories (5 of 6) 243
Figure 2-49 General circuit diagram, finishing accessories (6 of 6) 244
Figure 2-50 Print-quality troubleshooting procedure page 245
Figure 2-51 Black print-quality troubleshooting page 246
Figure 2-52 Configuration page 250
Figure 2-53 HP embedded Jetdirect page 251
Figure C-1 Certificate of Volatility (1 of 2) 605
Figure C-2 Certificate of Volatility (2 of 2) 606
Figure C-3 Certificate of Volatility (1 of 2) 607
Figure C-4 Certificate of Volatility (2 of 2) 608

1 Theory of operation

- Basic operation
- Formatter-control system
- Engine-control system
- Laser/scanner system
- Image-formation system
- Scanning/image capture system
- Pickup, feed, and delivery system
- 3,500-sheet high-capacity input (HCI) feeder
- Stapler/stacker and stapler/stacker with hole punch
- Booklet maker

Basic operation

The product routes all high-level processes through the formatter, which stores font information, processes the print image, and communicates with the host computer.

The basic product operation comprises the following systems:

- The engine-control system, which includes the DC controller printed circuit assembly (PCA), the low-voltage and high-voltage power supplies, and the fuser control
- The laser/scanner system, which forms the latent image on the photosensitive drum
- The image-formation system, which transfers a toner image onto the paper
- The paper feed system, which uses a system of rollers and belts to transport the paper through the product
- Accessories

Figure 1-1 Relationship between the main product systems

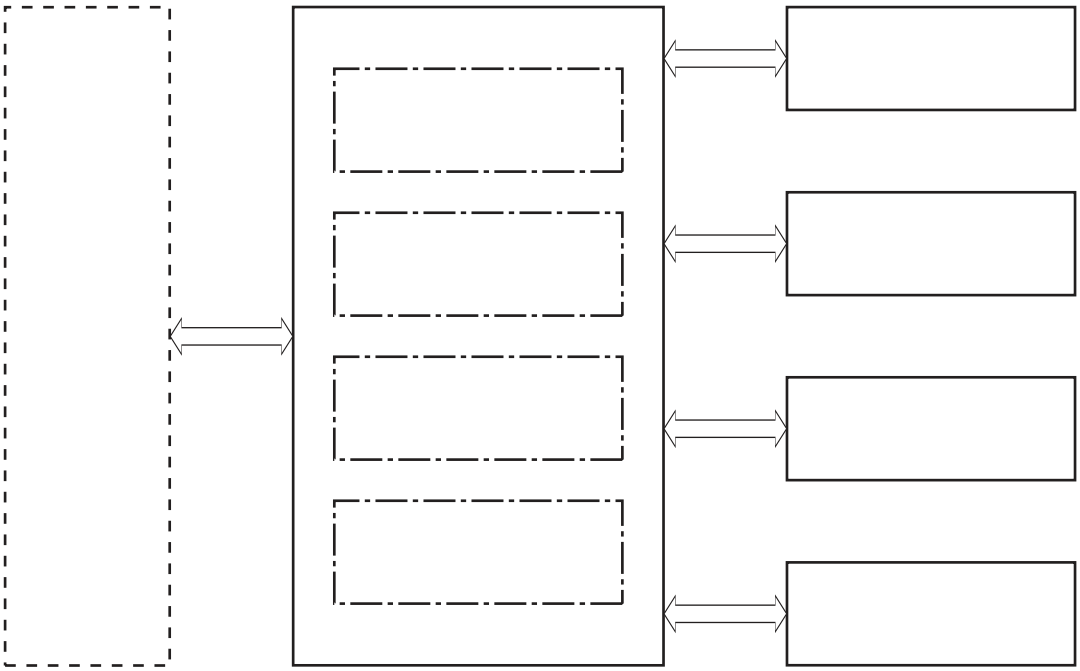

Sequence of operation

The DC controller in the engine-control system controls the operational sequences of the product. The following table describes durations and operations for each period of a print operation from the time the product is turned on until the motor stops rotating.

Normal sequence of operation

NOTE: The following sequence of operation applies to the engine portion of the product.

Table 1-1 Sequence of operation (product base)

Name	Timing	Purpose
WAIT	The time required for the fuser surface and rollers to reach target temperatures after the product is turned on (four minutes or less)	• Initialize CPU and ASIC • Run fans 1-6 for 30 seconds; run duplexer fan for 3 seconds • Start formatter interface communication • Start fuser heaters • Start cartridge check • Check toner level memory • Start communication with optional interfaces (duplexer, Tray 1, Tray 4) • Check cassette lifting and loading status • Check jam status (auto flush/eject) • Check for fuser wrapping jam • Check door open/sleep • Start fuser-roller temperature control and delivery motor
STBY (standby)	After the WAIT state or after the Last Rotation state until a print reservation command comes from the formatter	• Run fuser control (fuser roller temperature at 180°C (356°F), pressure roller at 140°C (285°F)) • Await print reservation command (await INTR sequence) • Run fan motors 1-5 at half speed with fan 6 off • After five minutes or more, run the fuser/delivery motor for about 0.08 seconds to prevent deformation of the pressure roller

Table 1-1 Sequence of operation (product base) (continued)

Name	Timing	Purpose
INTR (initial rotation)	After a print-reservation command until the laser/scanner enters a ready state	• Run scanner motor • Run fuser/delivery motor • Run drum motor • Run high-voltage control (negative bias to transfer roller) • Receive print command • Run fan motors 1-6 at full speed • Start pickup operation • Apply high-voltage control bias to primary charging roller, developing roller, and transfer roller • Heat fuser roller to 190°C (374°F) and pressure roller to 180°C (356°F) • Execute final check on initial rotation (high-voltage, scanner motor, pickup operation complete) • Check jam/door open/failure/sleep
PRINT	After the input of a print command until the primary DC bias is turned off	• Run fuser/delivery, drum, scanner, and fan motors • Set fuser control to print temperature: fuser 190°C (374°F) • Send engine-to-formatter output signal • Send formatter-to-engine input signal • Run paper-feed control • Run image control • Set high-voltage control (toner level-output separation bias and pressure roller bias) • Run next-pickup control to calculate the speed at which to move paper • Check jam/door open/failure
LSTR (last rotation)	After the primary charging roller is turned off until each motor stops	• Run fuser/delivery, drum, scanner, and fan motors. Complete high-voltage control • Set fuser control to the standby temperature 180°C (356°F); run fans 1–6 at full speed • Stop fuser/delivery, drum, and scanner motors (write in cartridge memory) • Check jam/door open/failure; await next pickup

Formatter-control system

The formatter performs the following functions:

- Controlls sleep mode
- Receiving and processing print data from the various product interfaces
- Monitoring control panel functions and relaying product status information (through the control panel and the network or bidirectional interface)
- Developing and coordinating data placement and timing with the DC controller PCA
- Storing font information
- Communicating with the host computer through the network or the bidirectional interface

The formatter receives a print job from the network or bidirectional interface and separates it into image information and instructions that control the printing process. The DC controller PCA synchronizes the image formation system with the paper input and output systems, and then signals the formatter to send the print image data.

Formatter hardware

The formatter system includes the following components.

Table 1-2 Formatter hardware components

Component	Function
Microprocessor	800 mhz microprocessor stores fonts and control programs.
RAM	Stores printing and font information and temporarily stores print-image data before it sent to the print engine. RAM data is lost when the product is turned off. NOTE: Upgrading RAM improves graphic-intense printing operations, but does not increase the I/O buffer space or the printing speed.
NVRAM	Stores configuration information. NVRAM is saved when the product is turned off.
USB	Sends and receives data through USB type B interface connector (connected to the host computer).
Hard disk drive (HDD) Solid state module (SSM)	The HDD or SSM store the firmware. A remote firmware upgrade process is used to overwrite and upgrade the firmware on the HDD or SSM.
Real time clock	Used for the Wake-up time feature. It includes a battery to supply power when the product is turned off.
HP Jetdirect Inside (JDI)	An Ethernet interface that is part of the formatter.

Control panel

The control panel is an 8 inch full color SVGA (M880) or 4.3 inch full color SVGA (M830) with capacitive touchscreen and adjustable viewing angle. It includes an easy-access USB port for walk-up printing and a hardware integration pocket for third-party USB devices such as card readers.

The control panel has a diagnostic mode to allow testing of the touchscreen, Home button, and speaker. The control panel does not require calibration.

The M830 model has a QWERTY retractable keyboard beneath the control panel. The keys are mapped to your language in the same way the virtual keyboard on the product control panel is mapped. If you select a different keyboard layout for the virtual keyboard, the keys on the physical keyboard are remapped to match the new settings.

Engine-control system

The engine-control system receives commands from the formatter and interacts with the other main systems to coordinate all product functions. It consists of the following components:

- DC controller
- Low-voltage power supply
- High-voltage power supply
- Fuser control

Figure 1-2 Engine-control system

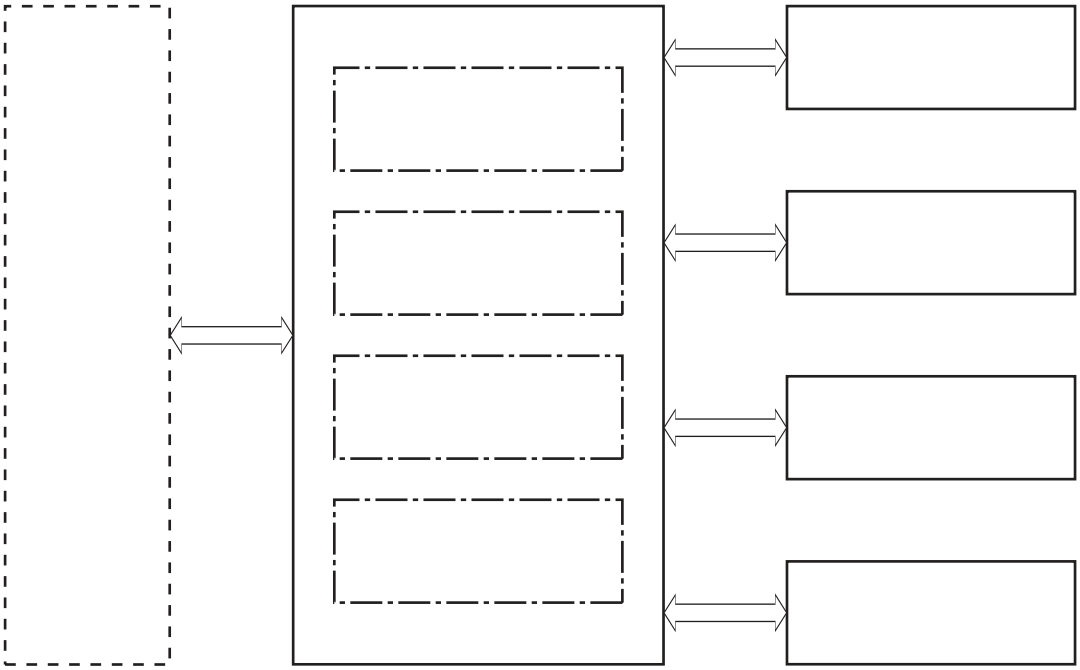

DC controller

The DC controller controls the operational sequence of the product.

Figure 1-3 DC controller block diagram

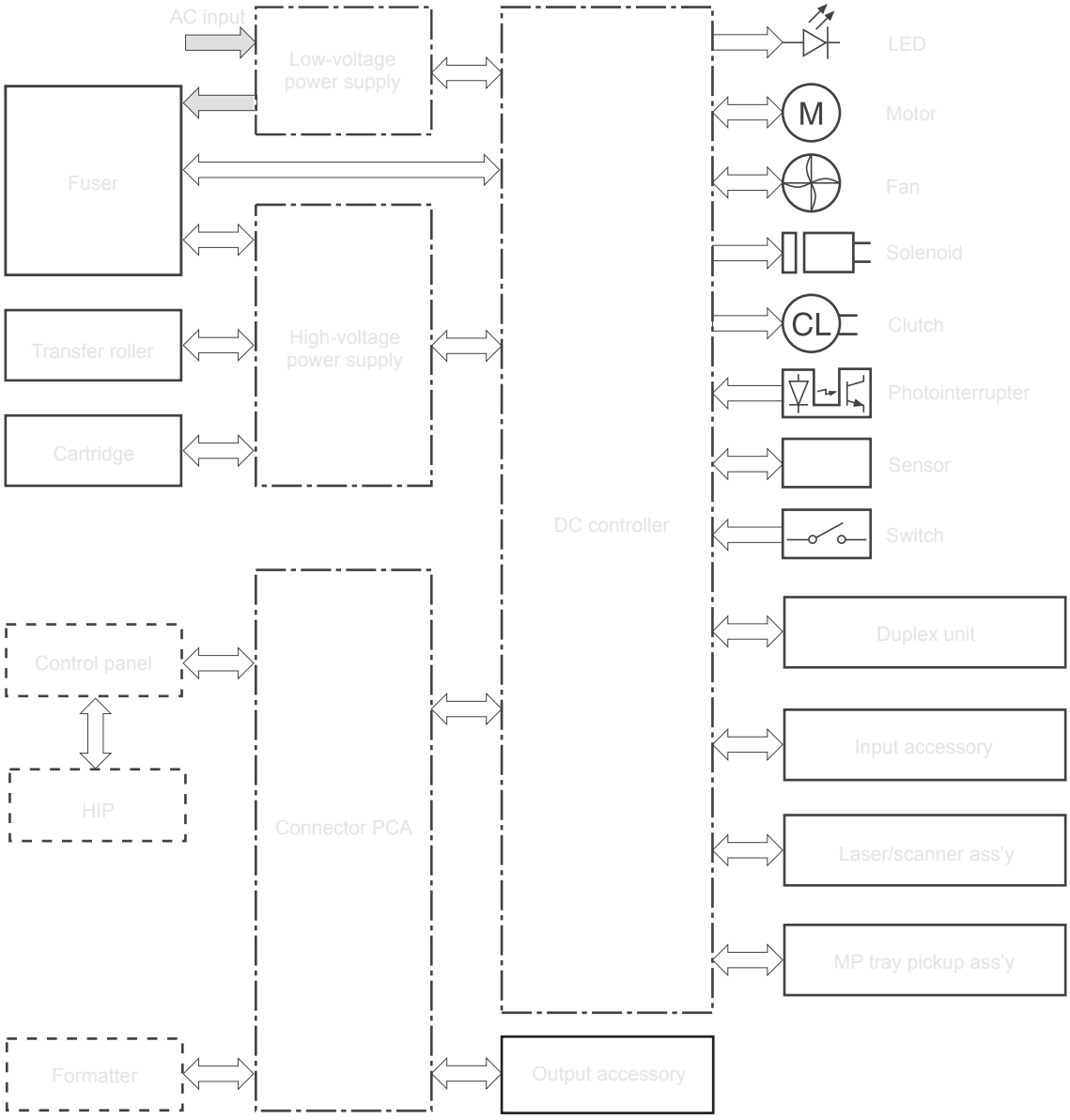

Table 1-3 Electrical components

Component type	Abbreviation	Component name
Motor	DCM1	Fuser motor
	DCM2	Drum motor
	M1	Fuser shutter motor
	M2	Tray 3 feed motor
	M3	Tray 2 feed motor
	M4	Scanner motor

Table 1-3 Electrical components (continued)

Component type	Abbreviation	Component name
	STM1	Pickup motor
	STM2	Lift-up motor
	STM3	Cassette pickup motor
	STM2001	Duplex side registration motor
	STM2002	Duplex switchback motor
	STM2003	Duplex feed motor
	STM2004	Duplex re-pickup motor
	STM2501	Tray 1 pickup motor
Fan	FAN1	Power supply fan
	FAN2	Controller fan
	FAN3	Rear delivery fan (M806 only)
	FAN3B	Rear delivery fan (M830 only)
	FAN4	Front delivery fan (M806 only)
	FAN4B	Front delivery fan (M830 only)
	FAN5	Cartridge fan
	FAN6	Center delivery fan (M806 only)
	FAN7	Rear edge cooling fan
	FAN8	Front edge cooling fan
	FAN9	Condensation prevention fan
	FAN2001	Duplex fan
Solenoid	SL1	Face-up solenoid (M806 only)
	SL2001	Duplex flapper solenoid
	SL2501	Tray 1 pickup solenoid
Clutch	CL2501	Tray 1 feed clutch
Switch	SW1	Power switch
	SW2	Tray 2 media-length switch
	SW3	Tray 2 media-width switch
	SW4	Tray 3 media-length switch
	SW5	Tray 3 media-width switch
	SW6	Left door open detection switch
	SW7	Right door open detection switch
	SW8	Front door open detection switch
	SW9	Output accessory detection switch (M806 only)

Table 1-3 Electrical components (continued)

Component type	Abbreviation	Component name
	SW9B	Output accessory detection switch (M830 only)
	SW10	Interlock switch
	—	Test print switch
Photointerrupter	PS1	Right media-width sensor
	PS2	Left media-width sensor
	PS3	Center media-width sensor
	PS4	TOP sensor
	PS5	Fuser shutter home position sensor
	PS8	Tray 2 feed sensor C
	PS9	Loop sensor
	PS502	Fuser delivery sensor
	PS503	Fuser depressurization sensor
	PS1401	Tray 2 feed sensor B
	PS1402	Tray 2 feed sensor A
	PS1403	Tray 3 feed sensor B
	PS1404	Tray 3 feed sensor A
	PS1405	Tray 2 media-level sensor 1
	PS1406	Tray 2 media-level sensor 2
	PS1407	Tray 3 media-level sensor 1
	PS1408	Tray 3 media-level sensor 2
	PS1409	Tray 2 media-surface sensor
	PS1410	Tray 2 media-presence sensor
	PS1411	Tray 3 media-surface sensor
	PS1412	Tray 3 media-presence sensor
	PS1413	Cassette pickup roller home position sensor
	PS1451	Face-down tray delivery sensor (M806 only)
	PS1452	Face-down tray media-full sensor (M806 only)
	PS2002	Duplex switchback sensor
	PS2003	Duplex pre-registration sensor
	PS2004	Duplex feed sensor
	PS2005	Duplex residual media sensor
	PS2501	Tray 1 media-presence sensor
	PS2502	Tray 1 feed sensor

Table 1-3 Electrical components (continued)

Component type	Abbreviation	Component name
	SR2001	Duplex side registration sensor
Sensor	—	Environment sensor
LED	LED1	Power LED

Motors

The product has 14 motors for paper feed and image formation. The DC controller determines there is a motor failure if a motor does not reach a specified speed within a specified period after motor startup, or if the rotational speed is outside a specified range for a specified period.

Table 1-4 Motors

Abbreviation	Component name	Components driven or motor function
DCM1	Fuser motor	Pressure roller and fuser delivery roller Pressurizes or depressurizes the pressure roller
DCM2	Drum motor	Photosensitive drum, registration roller and pre-registration roller
M1	Fuser shutter motor	Opens or closes the fuser shutter
M2	Tray 3 feed motor	Tray 3 feed roller
M3	Tray 2 feed motor	Tray 2 feed roller
M4	Scanner motor	Scanner mirror
STM1	Pickup motor	Moves the cassette pickup roller up or down
STM2	Lift-up motor	Lifts the cassette
STM3	Cassette pickup motor	Tray 2 pickup roller, Tray 2 feed roller, Tray 3 pickup roller, and Tray 3 feed roller
STM2001	Duplex side registration motor	Duplex side registration guide
STM2002	Duplex switchback motor	Duplex inlet roller and duplex switchback roller
STM2003	Duplex feed motor	Duplex registration roller and duplex feed roller
STM2004	Duplex re-pickup motor	Duplex re-pickup roller
STM2501	Tray 1 pickup motor	Tray 1 pickup roller and Tray 1 feed roller

The DC controller determines the following fan failures.

Failure detection function	Supported feature
Power supply fan failure detection	Yes
Controller fan failure detection	Yes
Rear delivery fan failure detection	Yes
Front delivery fan failure detection	Yes

Failure detection function	Supported feature
Cartridge fan failure detection	Yes
Center delivery fan failure detection (M806 only)	Yes
Rear edge cooling fan failure detection	Yes
Front edge cooling fan failure detection	Yes
Condensation prevention fan failure detection	Yes
Duplex fan failure detection	Yes

Fans

The product fans prevent the temperature from rising in the product and cool the delivered paper.

Table 1-5 Fans

Abbreviation	Component name	Area cooled	Type	Speed	Failure detection
FAN1	Power supply fan	Around the power supply assembly	Exhaust	Full/half	Yes
FAN2	Controller fan	Around the formatter	Intake	Full/half	Yes
FAN3	Rear delivery fan (M806 only)	Around the delivery area	Exhaust	Full/half	Yes
FAN3B	Rear delivery fan (M830 only)	Around the delivery area	Exhaust	Full/half	Yes
FAN4	Front delivery fan (M806 only)	Around the delivery area	Exhaust	Full/half	Yes
FAN4B	Front delivery fan (M830 only)	Around the delivery area	Exhaust	Full/half	Yes
FAN5	Cartridge fan	Cartridge	Intake	Full/half	Yes
FAN6	Center delivery fan (M806 only)	Around the delivery area	Intake	Full	Yes
FAN7	Rear edge cooling fan	Around the fuser assembly	Intake	Full	Yes
FAN8	Front edge cooling fan	Around the fuser assembly	Intake	Full	Yes
FAN9	Condensation prevention fan	Around the fuser assembly	Intake	Full	Yes
FAN2001	Duplex fan	Inside the duplex unit	Intake	Full	Yes

Fuser-control circuit

This product features on-demand fusing. The fuser heater control circuit and the fuser heater safety circuit control the fuser temperature according to commands from the DC controller. The product uses on-demand fusing. The fuser-control circuit consists of the following major components:

Figure 1-4 Fuser-control circuit

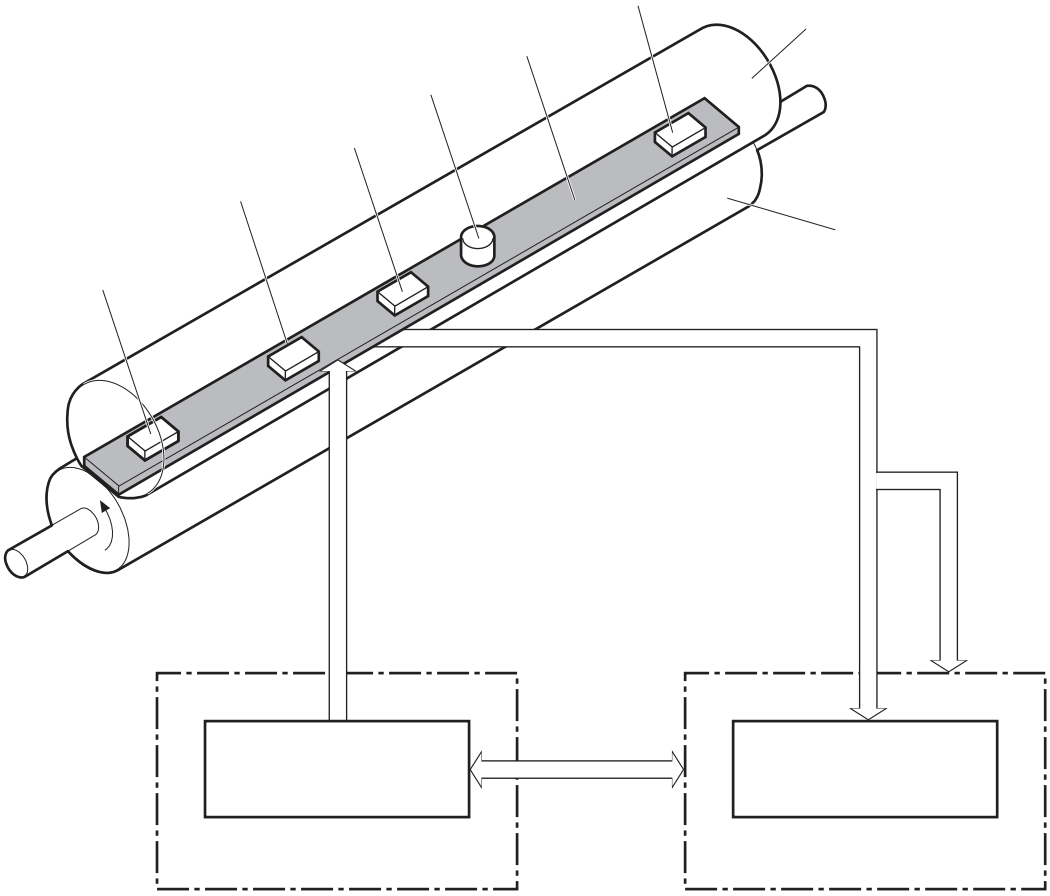

Table 1-6 Fuser components

Abbreviation	Component name	Function
H1	Fuser main heater	Heats the center area of the fuser sleeve
H2	Fuser sub heater	Heats the edge of the fuser sleeve
TH1	Main thermistor	Detects the center temperature of the fuser heater (contact type)
TH2	Small size thermistor	Detects the temperature at one end of the fuser heater (contact type)
TH3	Front thermistor	Detects the temperature at one end of the fuser heater (contact type)
TH4	Rear thermistor	Detects the temperature at one end of the fuser heater (contact type)
TP	Thermoswitch	Prevents an abnormal temperature rise of the fuser heater (contact type)

Figure 1-5 Fuser system block diagram

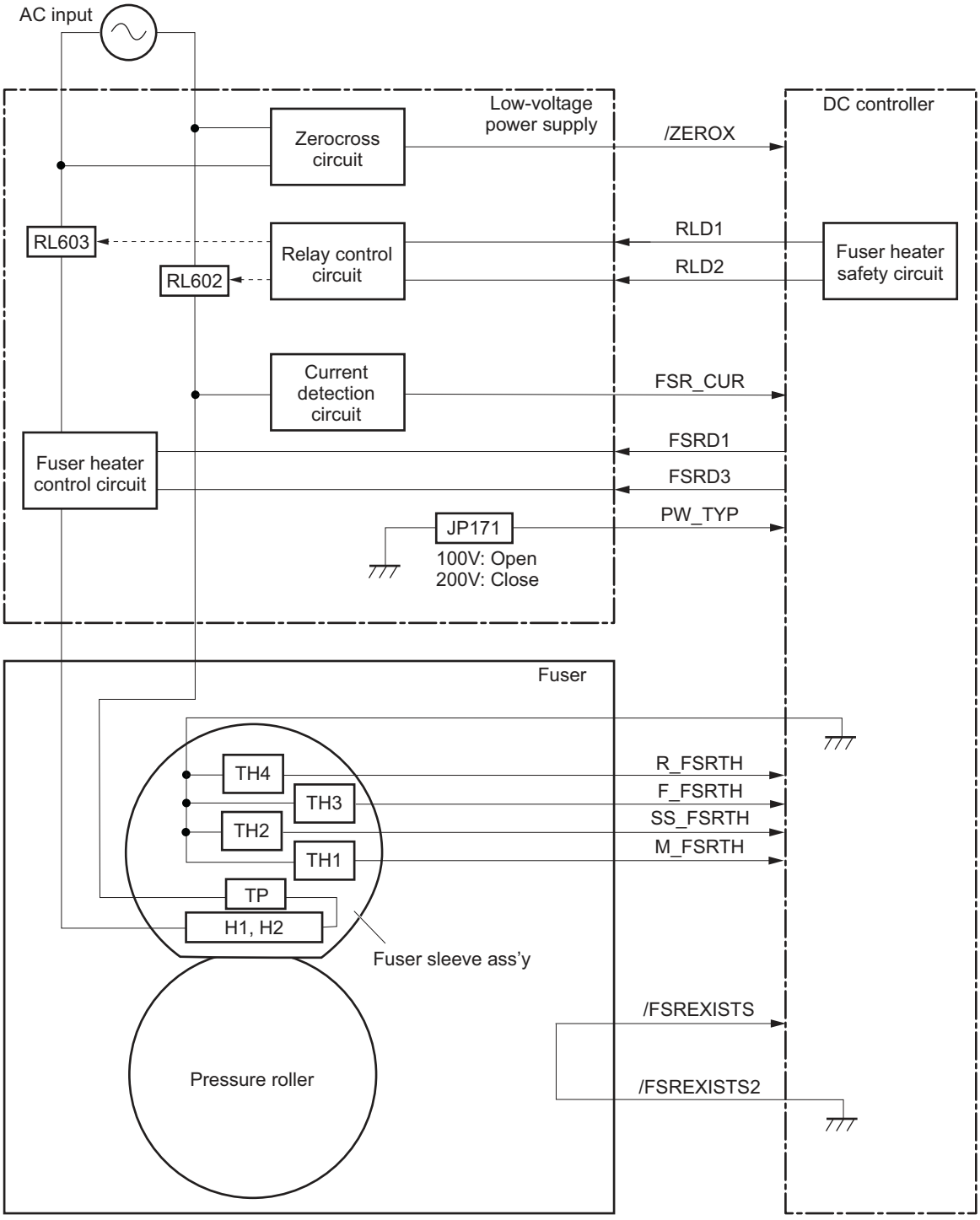

Fuser heater protection

The fuser protective function detects an abnormal temperature rise of the fuser unit and interrupts power supply to the fuser heater.

The following four protective components prevent an abnormal temperature rise of the fuser heater:

- DC controller

  The DC controller monitors the detected temperature of the thermistor. The DC controller deactivates the FUSER HEATER CONTROL signal and releases the relays (RL602, RL603) to interrupt power supply to the fuser heater when it detects an excessive temperature.

- Fuser-heater safety circuit

  The fuser heater safety circuit monitors the detected temperature of the thermistor. The fuser heater safety circuit releases the relays (RL602, RL603) to interrupt power supply to the fuser heater when it detects an excessive temperature.

- Thermoswitch

  The contact to the thermoswitch breaks to interrupt power supply to the fuser heater when the temperature of the fuser heater is abnormally high.

- Current detection circuit

  The DC controller detects the current value of the CURRENT DETECTION signal and deactivates the FUSER HEATER CONTROL signal to interrupt power supply to the fuser heater when the current is higher than a specified value.

Table 1-7 **Fuser control functions**

Function	Supported feature
Fuser temperature control	Yes
Fuser failure detection	Yes
Frequency detection circuit failure detection	Yes
Fuser depressurization mechanism failure detection	Yes
Fuser type discrepancy detection	N/A
Fuser type identification detection	No
Fuser presence detection	Yes
Fuser life detection	Yes
Relay failure detection	No
Pressure roller cleaning	Yes

Low-voltage power supply

The low-voltage power supply (LVPS) converts AC power into the DC voltage that the product components use. The following figure shows the system block diagram of the low-voltage power supply.

Figure 1-6 Low-voltage power supply

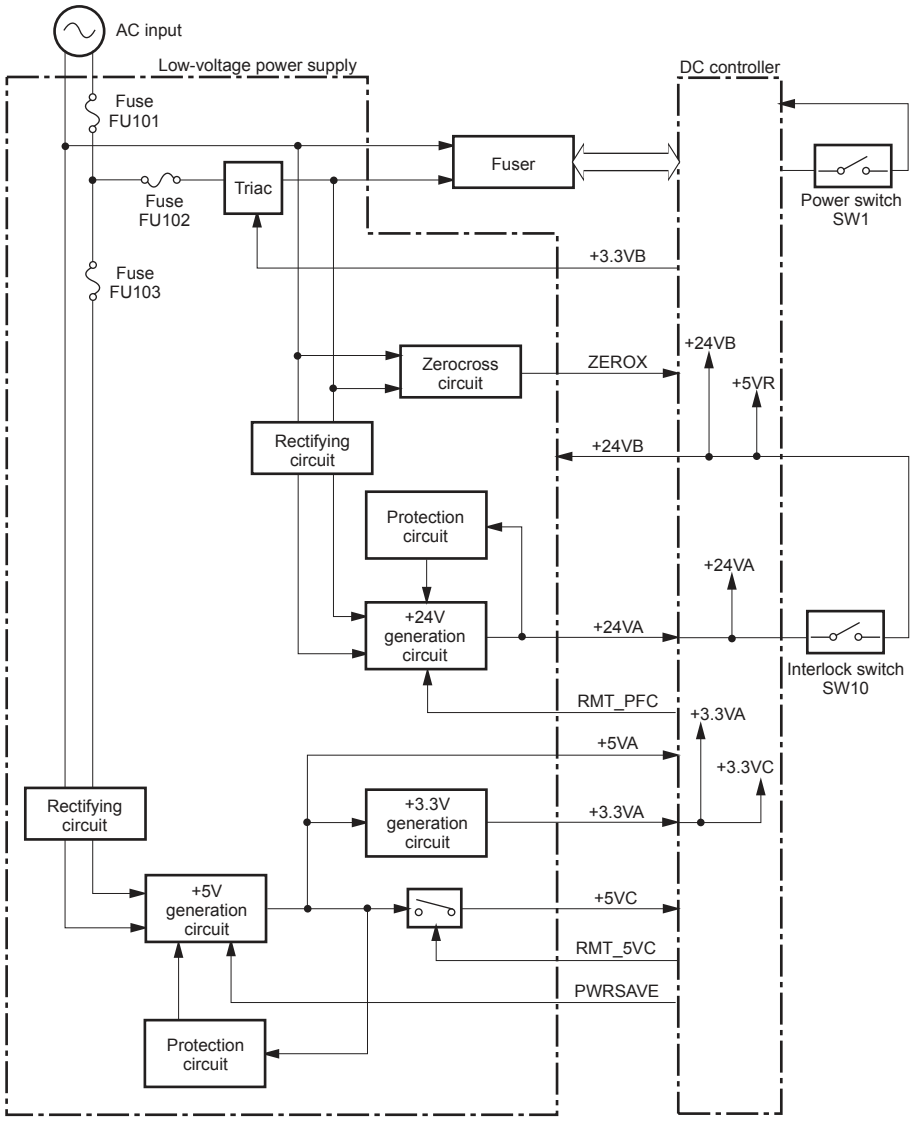

The product uses three DC voltages: 24V, 5V, and 3.3V. The voltages are subdivided as follows:

Main DC voltage	Sub-voltage	Behavior
+24V	+24VA	Supplied constantly
		Stopped during active off or inactive off
	+24VB	Interrupted when the front door is open (SW10)
		Interrupted when the left door is open (SW10)

Main DC voltage	Sub-voltage	Behavior
+5V	+5VA	Supplied constantly
	+5VB	Controlled by the formatter
	+5VC	Supplied constantly Stopped during active off or inactive off
	+5VR	Interrupted when the front door is open (SW10) Interrupted when the left door is open (SW10)
+3.3V	+3.3VA	Supplied constantly
	+3.3VB	Supplied constantly Stopped during active off or inactive off
	+3.3VC	Supplied constantly Stopped during active off or inactive off

Over-current/over-voltage protection

The low-voltage power supply (LVPS) has a protective circuit against over-current and over-voltage to prevent failures in the power supply circuit. It automatically stops supplying the DC voltage whenever excessive current flows or voltage abnormally increases.

If the DC voltage is not being supplied from the LVPS, the protective function might be running. In this case, turn off the power switch and unplug the power cable. Do not turn the power switch on until the root cause is found.

The DC controller notifies the formatter of a LVPS failure when the protective function is activated.

In addition, the LVPS has three fuses to protect against over-current. If over-current flows into the AC line, the fuse blows to stop AC power.

For safety, the product interrupts +24V and +5V power when the interlock switch is turned off. Accordingly, the DC voltage to the following components is interrupted:

- High-voltage power supply
- Drum motor
- Fuser motor
- Scanner motor
- Duplex unit
- Face-up solenoid (M806 only)
- Laser driver

WARNING! The remote switch control circuit turns on or off the product power so that the AC power flows even if the power switch is turned off. You must unplug the product power cord before servicing the product.

WARNING! If you believe the over-current or over-voltage protection circuits have been activated, do not connect the product power cord or turn on the product power until the cause of the failure is found and corrected.

Table 1-8 Low-voltage power supply functions

Function	Supported feature
Sleep mode	No
Power supply voltage detection	Yes
Automatic power OFF	No
Automatic power ON/OFF	No
Active OFF	Yes
Inactive OFF	Yes
Network mode	No
Power switch illumination	Yes
Low-voltage power supply failure detection	Yes
Power save mode	Yes

High-voltage power supply

The high-voltage power supply (HVPS) applies biases to the following components:

- Primary charging roller
- Developing roller
- Transfer roller
- Static charge eliminator
- Fuser sleeve
- Pressure roller
- Pre-transfer guide

The following figure shows the system block diagram of the high-voltage power supply.

NOTE: The primary charging roller and the developing roller are in the cartridge.

Figure 1-7 High-voltage power supply

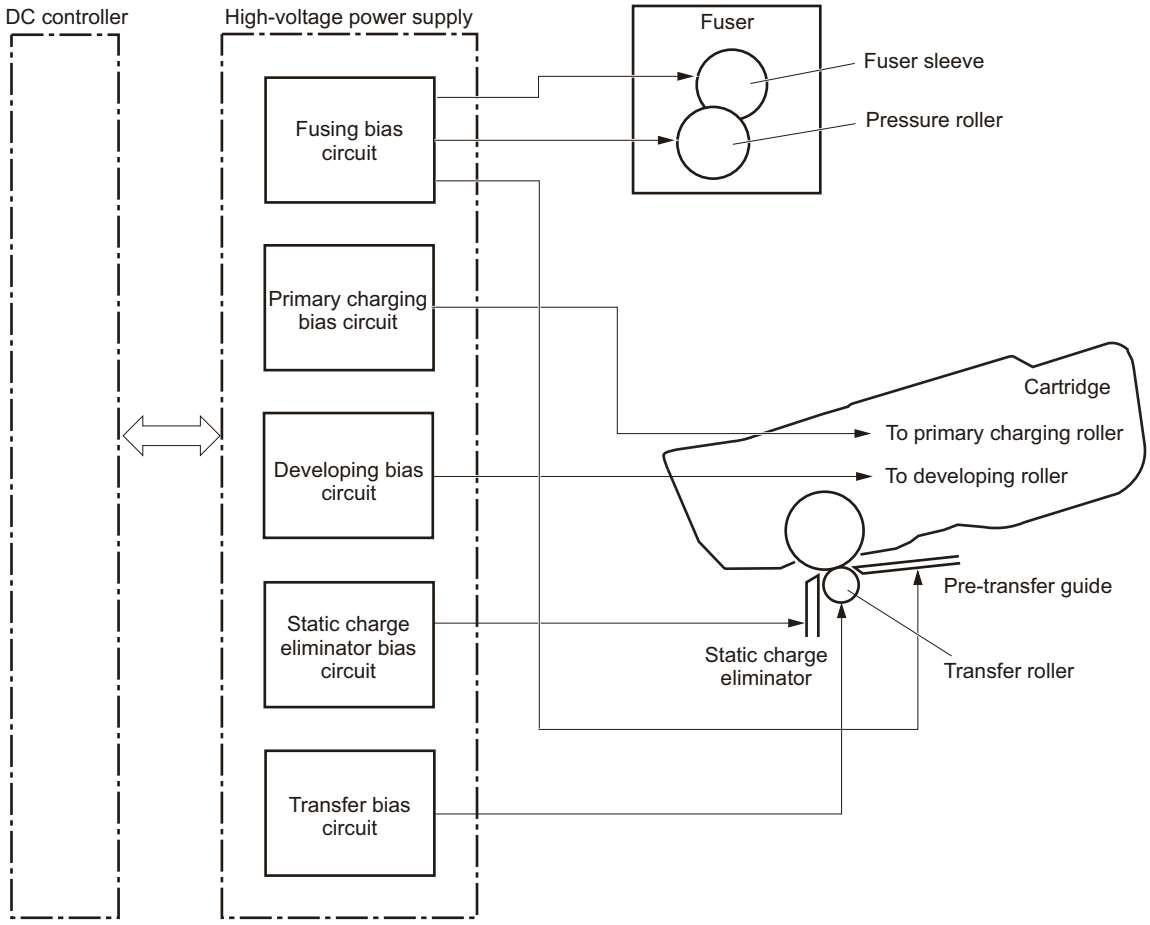

Table 1-9 High-voltage power supply circuits

Bias generation circuit	Purpose
Primary charging bias	Applies bias to the primary charging roller to spread a uniform negative charge to the photosensitive drum.
Developing bias	Controls the amount of toner transferred to latent images on the photosensitive drum.
Pre-transfer upper guide bias	Prevents toner from adhering to the pre-transfer upper guide.
Transfer bias	Applies specific bias levels to the transfer charging roller at specific times. • Cleaning bias: Cleans the transfer charging roller by moving toner to the photosensitive drum. • Between-page bias: Prevents residual toner from adhering to the transfer charging roller between pages of a print job. • Print bias: Transfers toner to paper from the photosensitive drum.
Separation static charge eliminating bias	Discharges paper at delivery.
Toner level detection	Monitors toner level via two antennae inside the toner cartridge.

Laser/scanner system

The laser unit of the laser/scanner system includes two laser diodes that enable scanning two lines simultaneously.

The laser/scanner PCA turns on the laser diodes based on signals from the DC controller and the formatter systems. The laser beams strike a six-sided mirror that rotates at a constant speed. The six-sided mirror reflects the beams through a focusing lens to a reflective mirror and then to the photosensitive drum, which also rotates at a constant speed. This allows the beams to scan across the drum at a constant speed to form the latent image on the drum surface.

Figure 1-8 Laser/scanner system

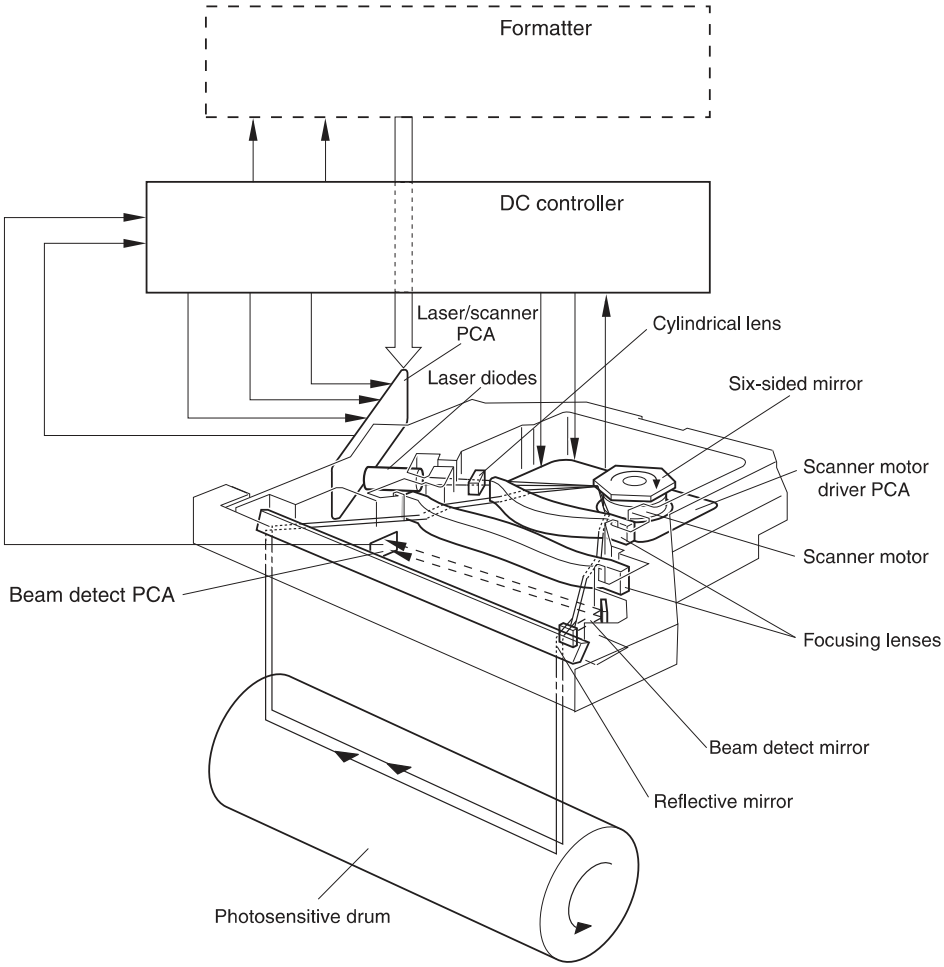

Image-formation system

The image formation system consists of the toner cartridge, the transfer charging roller, and the fuser.

When the formatter sends a print command, the image formation system completes the following process.

1. The main motor rotates the photosensitive drum, the primary charging roller, the developing cylinder, the transfer charging roller, and the pressure roller.
2. The primary charging roller applies a uniform negative charge to the photosensitive drum surface.
3. The laser beams, modulated by signals from the formatter, focus on the photosensitive drum surface to form a latent image.
4. Toner on the developing cylinder converts the latent image into a visible image, which is transferred onto paper by the transfer charging roller.
5. The fuser applies heat and pressure to the toner image on the paper to make the image permanent.
6. The cleaning blade scrapes residual toner from the photosensitive drum.
7. The primary charging roller applies a new charge to the photosensitive drum for the next image.

Image formation process

Each of the following processes functions independently and must be coordinated with the other product processes.

Figure 1-9 Image formation process

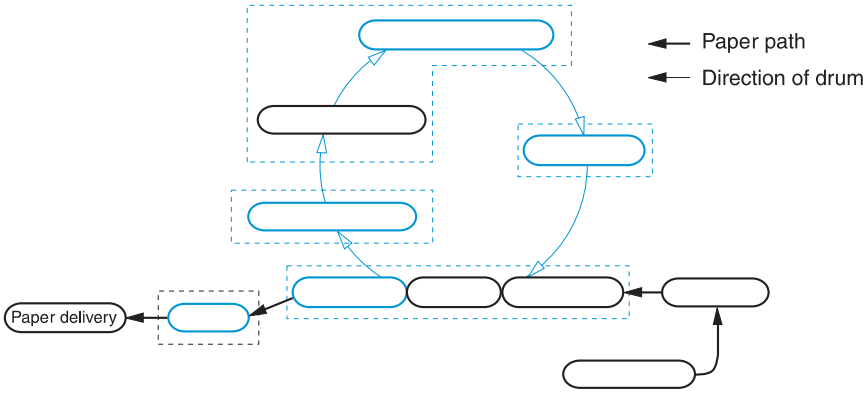

Image formation consists of the following processes.

Table 1-10 Image formation process

Step	Process
Step 1: Primary charging (conditioning)	The primary charging roller, which is made of conductive rubber, is located inside the toner cartridge. An AC bias applied to it erases residual charges from the previous image. Then a negative DC bias applied to it creates a uniform negative potential on the photosensitive drum.
Step 2: laser beam exposure (writing)	Two laser diodes project laser beams onto a rotating scanning mirror. As the scanning mirror rotates, it reflects the beams through a set of focusing lenses and onto another mirror, which reflects the beams through a slot in the top of the toner cartridge and onto the photosensitive drum. The beams sweep from left to right on the drum discharging the negative potential wherever they strike the surface. This creates the latent electrostatic image on the drum.
Step 3: Developing	The developing drum inside the toner cartridge receives a negative charge from the negative DC supply and charges the toner as it rotates. With the negative charge, the toner is attracted to the laser discharged areas of the latent image on the photosensitive drum and is repelled from the negatively charged (unexposed) areas.
Step 4: Pre-transfer	The pre-transfer upper guide receives bias to prevent toner from adhering to it from the photosensitive drum.
Step 5: Transfer	The transfer charging roller applies a positive charge to the paper causing the negatively charged toner image to be attracted to the paper from the photosensitive drum.
Step 6: Separation	As the paper is separated from the photosensitive drum, the static charge eliminator reduces the charge on the paper. This stabilizes the feed system and prevents loss of the toner image in temperature and humidity.
Step 7: Fusing	The paper with the toner image on it passes between the heated fuser roller and the pressure roller. This melts the toner and presses it into the paper.
Step 8: Drum cleaning	After the separation process, the drum is cleaned and conditioned for the next image. The cleaning blade, which is always in contact with the surface of the drum, scrapes off excess toner. The excess toner is stored in the waste toner receptacle.

Toner cartridge

The product has one toner cartridge. The cartridge consists of the following components.

Figure 1-10 Layout of the toner cartridge

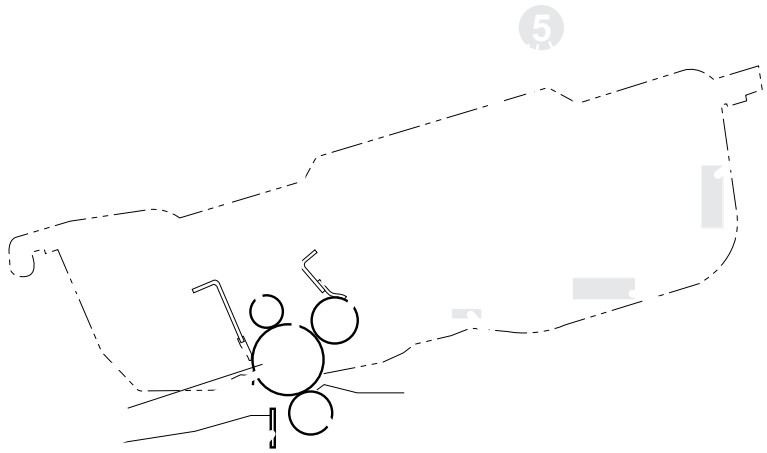

Table 1-11 Toner cartridge components

Item number	Component name
1	Primary charging roller
2	Laser beams
3	Blade
4	Developing cylinder
5	Developing cylinder
6	Cartridge memory
7	Flat antenna
8	Plate antenna
9	Transfer charging roller
10	Static charge eliminator
11	Photosensitive drum roller
12	Cleaner blade
13	Waste toner reservoir

Toner cartridge design

The toner cartridge contains three cylindrical toner reservoirs (callout 5) that interconnect. Cylindrical hoppers eliminate packing and accumulation in areas where the toner does not reach the development area (callout 4). Stirrers rotating within each of the cylinders unpack the toner allowing it to be displaced easily into the development area.

No-shake toner

The geometry of the hoppers and stirrers automatically redistributes and unpacks the toner eliminating the need to shake the toner cartridge at installation or when toner begins to run low. The toner cartridge is out of toner at the point when print fading occurs.

Toner cartridge memory chip

The toner cartridge includes a memory chip with RAM (callout 6) to record its condition and to provide information to the product. The memory chip controller reads and writes to the memory after receiving instructions from the DC controller, which monitors the antenna unit.

- Read
  - When power is turned on
  - When the front cover is closed
  - When DC controller receives a command from the formatter
- Write
  - When a print operation is complete
  - When the DC controller receives a command from the formatter

Toner seal

The toner cartridge seal is opened automatically when the toner cartridge is installed into the product.

The DC controller checks the toner seal status to verify whether the toner cartridge is new whenever the product is turned on, the toner cartridge is inserted, or the front cover is closed. If the toner cartridge is new, the DC controller sends the open signal to the drum motor. The drum motor rotates in reverse to roll up the toner seal, and then, after a short time, the DC controller turns off the open signal.

The DC controller also monitors the presence of a toner cartridge. When a toner cartridge is inserted, the DC controller checks toner seal status as a signal that the toner cartridge is present.

Toner level detection

The toner cartridge includes a plate antenna and a flat antenna to enable the DC controller to detect toner-level.

Whenever the power is turned on, a door cover is closed, or a toner operation is performed, the DC controller sets the developing bias signal, and the developing AC bias circuit sends a signal to the toner level circuit 1 and to the developing cylinder. This causes the plate antenna to return the output value to the toner level circuit 1. The toner level circuit 1 compares the two signals and sends the results to the DC controller as the toner level detection signal. At the same time, the DC controller turns on the frequency output signal to output the reference frequency to the flat antenna. This causes the flat antenna to return the output value to the toner level circuit 2. The toner level circuit 2 compares the two signals and sends the results to the DC controller as a toner level percentage, which is accurate within 1%. The DC controller reports the result to the formatter.

Scanning/image capture system

NOTE: The information in this section applies only to the HP LaserJet Enterprise Flow MFP M830 product.

Scanner

The scanner is a carriage-type platen scanner which includes the frame, glass, LED optics, and a scanner controller board (SCB) attached to the back of the assembly. The scanner has two sensors to detect Legal and Ledger/A3 sized paper and a switch to indicate when the document feeder is open.

The document feeder and control-panel assembly are attached to the scanner assembly. If the scanner fails, it can be replaced as a whole unit. The scanner replacement part does not include the document feeder, SCB, or control-panel assembly.

Document feeder system

Figure 1-11 Document feeder cross section

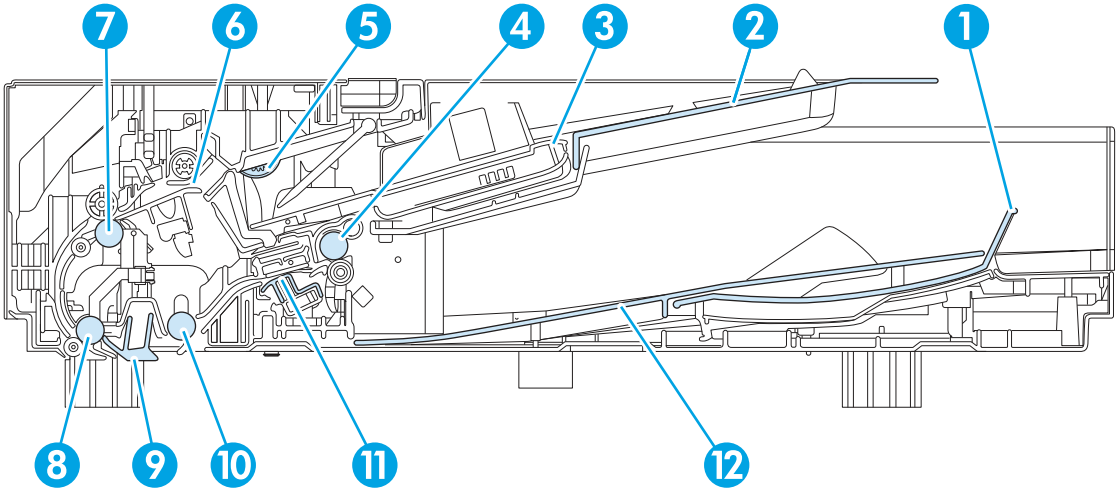

Item number	Component name
1	Paper stopper
2	Input tray
3	Lift plate
4	Exit-drive roller
5	Pick roller
6	Separation roller
7	Deskew-drive roller
8	Pre-scan drive roller
9	Simplex selector
10	Post-scan drive roller
11	Duplex selector (background selector)
12	Output tray

Document feeder sensors

The document feeder contains the following sensors:

Figure 1-12 Document feeder sensor positions

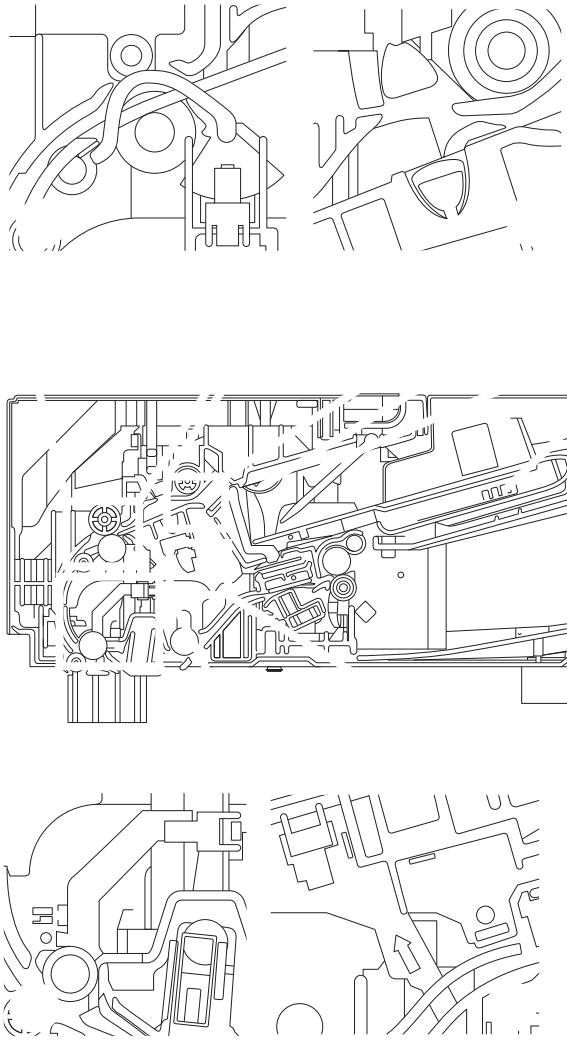

Table 1-12 Document feeder sensors

Item number	Component name	Description
1	Sensor, legal	Detects whether there is a legal-size original.
2	Sensor, portrait/landscape	Detects whether there is a portrait-size or landscape-size original.
3	Sensor, media width	Detects the media stack width (one sheet or multiple sheets). Used in combination with other sensors to determine media size and orientation.
4	Sensor, stack height	Detects the media stack height (one sheet or multiple sheets).
5	Sensor, paper presence	Detects whether a document is present in the document feeder. If paper is present in the document feeder when copies are made, the product scans the document using the document feeder. If no paper is present when copies are made, the product scans the document using the scanner glass.

Table 1-12 Document feeder sensors (continued)

Item number	Component name	Description
6	Sensor, ultrasonic	Uses ultrasonic sound to detect a mutli-page paper feed. NOTE: This sensor also functions as the pick success sensor.
7	Sensor, deskew	Detects the top of the page as it approaches the back-side scan module during e-duplex copy jobs.
8	Sensor, prescan1	Activates the frontside scan module (this component is in the scanner base) and the frontside background selector (this component is in the document feeder) if needed for an e-duplex copy job (HP EveryPage).
9	Sensor, prescan2	Activates the backside scan module and the backside background selector if needed (these components are in the document feeder) for an e-duplex copy job.

Document feeder simplex operation

Following is the basic sequence of operation for a document feeder simplex job.

Figure 1-13 Simplex operation paper path

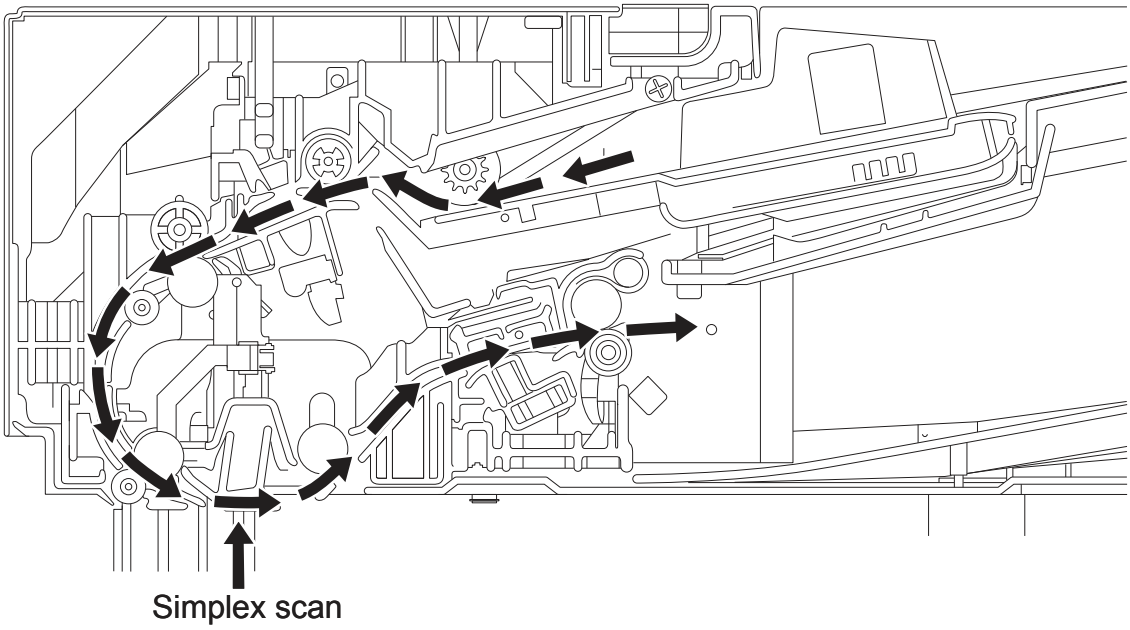

1. The *paper presence sensor* is activated when paper is loaded in the input tray.
2. The *lift motor* rotates to raise the lift plate until the maximum height is reached or the *stack height* sensor is triggered.
3. The *pick motor* rotates to lower the pick roller and start picking the loaded paper.
4. The *ultrasonic sensor* detects if more than one page passes the *separation roller*. If there is a multipick, the document feeder stops, and an error message appears on the control-panel display.
5. The *deskew sensor* is activated when leading edge of paper is driven passed it. The firmware registers the leading edge of paper position.

6. The leading edge of paper is continues to be driven into the pinch point of the *deskew drive roller* and the *deskew pinch rollers*. The paper is driven a preset distance past this point to create a buckle of paper allowing for skew correction

7. The *deskew motor* rotates to drive the *deskew drive roller* which pulls paper towards the *prescan drive roller*.

8. The *pick motor* stops turning and allows both the *pick and separator rollers* to free-spin while paper is being pulled in by the *deskew drive roller*.

9. The *feed motor* rotates to drive paper into the *prescan1 sensor*. The firmware registers the paper leading edge position as the *prescan1 sensor* is triggered.

10. The *feed motor* continues to rotate to drive the paper leading edge a calibrated distance from *prescan1 sensor* to the simplex scan area. The simplex scanner begins capturing scan data.

11. If the *ultrasonic sensor* detects the trailing edge of the page and *paper presence sensor* is still activated, more than one page was loaded in the input tray, and the next page is fed starting with step 3. This is repeated for all pages loaded in the document feeder input tray.

12. The *prescan1 sensor* is de-activated when trailing edge of paper passes it. The firmware registers this position as the trailing edge of the paper.

13. The *feed motor* continues to rotate to drive the paper trailing edge through the preset distance from *prescan1 sensor* to the scan area. The *simplex scanner* stops capturing scan data.

14. The *feed motor* continues to rotate until the *input tray* is empty and all pages have been fed through the document feeder.

15. The *lift motor* rotates to lower the lift plate to the home position, and the document feeder is in a ready state for the next scan operation.

Document feeder duplex operation

Following is the basic sequence of operation for a document feeder duplex job.

Figure 1-14 Duplex operation paper path

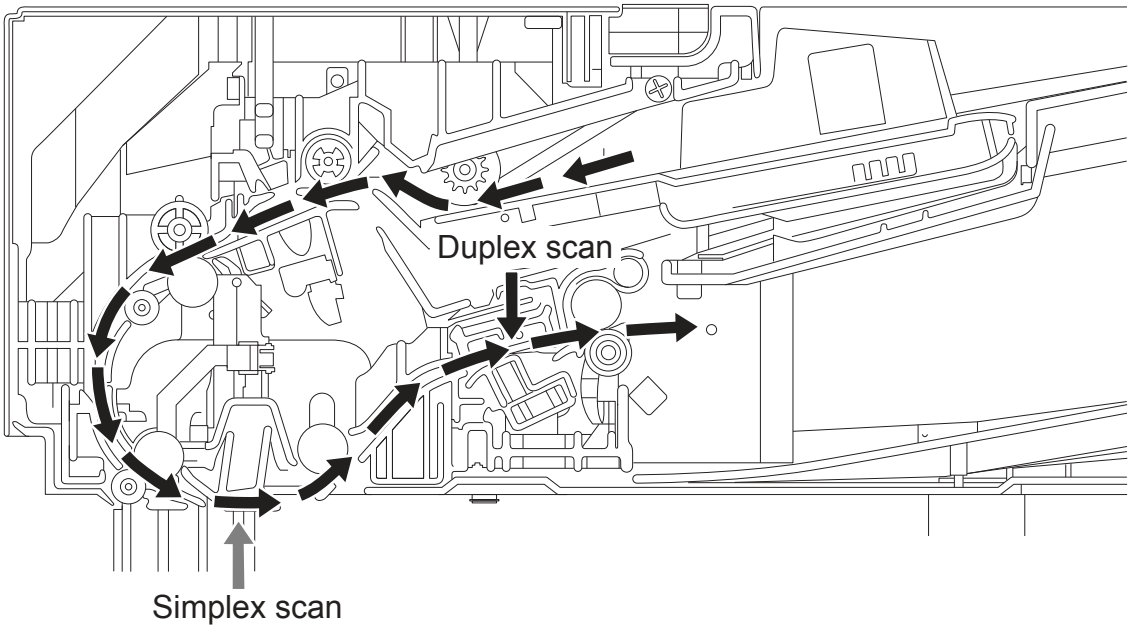

1. The *paper presence sensor* is activated when paper is loaded onto the input tray.
2. The *lift motor* rotates to raise the lift plate until the maximum height is reached or the *stack height sensor* is triggered.
3. The *pick motor* rotates to lower the pick roller and start picking the loaded paper.
4. The *ultrasonic sensor* detects if more than one page passes the *separation roller*. If there is a multipick, the document feeder stops and an error message appears on the control-panel display.
5. The *deskew sensor* is activated when the leading edge of the paper is driven passed it. The firmware registers the leading edge of the paper position.
6. The leading edge of the paper is continues to be driven into the pinch point of the *deskew drive roller* and the *deskew pinch rollers*. The paper is driven a preset distance past this point to create a buckle of paper allowing for skew correction.
7. The *deskew motor* rotates to drive the *deskew drive roller* which pulls the paper toward the *prescan drive roller*.
8. The *pick motor* stops turning and allows both the *pick roller* and the *separator roller*to free-spin while paper is being pulled in by the *deskew drive roller*.
9. The *feed motor* rotates to drive the paper into the *prescan1 sensor* . The firmware registers the paper leading edge position as the *prescan1 sensor* is triggered.
10. The *feed motor* continues to rotate to drive the paper leading edge a calibrated distance from *prescan1 sensor* to the simplex scan area. The simplex scanner begins capturing scan data.
11. The *feed motor* continues to drive the paper until the *prescan2 sensor* is triggered by the paper leading edge. The firmware registers the paper leading edge position as the *prescan2 sensor* is triggered.
12. The *feed motor* continues to drive the paper leading edge through the calibrated distance from *prescan2 sensor* to the duplex scan area. The *duplex scanner* begins capturing scan data.
13. If the *ultrasonic sensor* detects the trailing edge of the page and the *paper presence sensor* is still activated, more than one page was loaded, and the next page is fed (once the firmware has the memory available to store the scan data). This is repeated for all pages that are loaded in the document feeder.
14. The *prescan1 sensor* is de-activated when the trailing edge of the paper passes it. The firmware registers this position as the trailing edge of the paper.
15. The *feed motor* continues to rotate to drive the paper trailing edge through the preset distance from the *prescan1 sensor* to the scan area. The simplex scanner stops capturing scan data.
16. The *prescan2 sensor* is de-activated when the trailing edge of the paper passes it. The firmware registers this position as the trailing edge of the paper.
17. The *feed motor* continues to rotate to drive the paper trailing edge through the preset distance from the *prescan2 sensor* to the scan area. The *duplex scanner* stops capturing scan data.
18. The *feed motor* continues to rotate until the *input tray* is empty and all pages have been fed through.
19. The *lift motor* rotates to lower the lift plate to the home position and the document feeder is in a ready state for the next scan operation.

Document feeder paper control and deskew

Figure 1-15 Deskew rollers and width adjust

Item number	Component name
1	Deskew Pinch Rollers
2	Deskew Rollers
3	Width Adjust

- Adjustable width adjust guides are provided on the input tray to ensure that the paper is stacked together neatly at the center of the input tray. It also ensures the paper is located parallel with the direction of travel into the document feeder paper path.
- To further minimize skew due to improper loading of paper in the input tray, a deskew function is perform by buckling the paper to accumulate a paper buffer.
- The leading edge of the paper lines up parallel with the deskew drive rollers in preparation to be driven into the remaining paper path of the document feeder.

Document feeder paper pick and separation

Figure 1-16 Separation angled ramp, separation roller, and separation pad

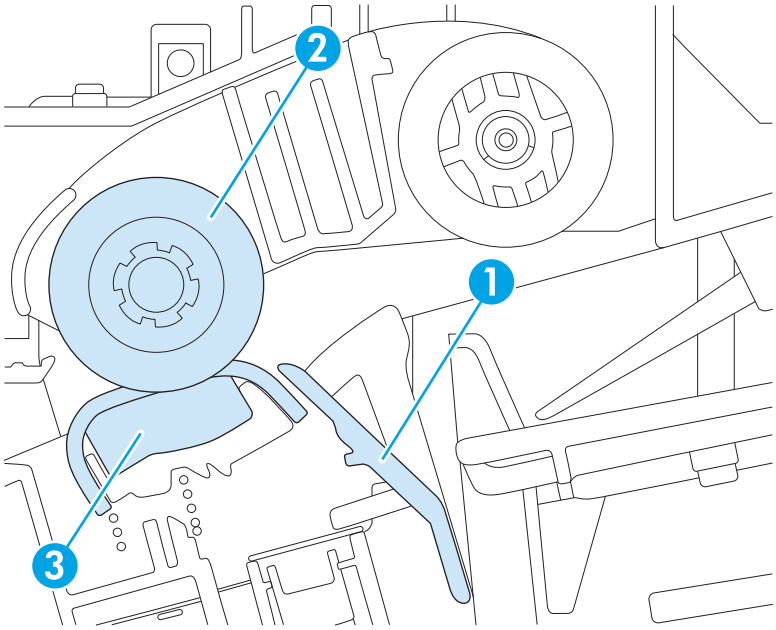

Item number	Description
1	Angled ramp
2	Separation roller
3	Separation pad

- The top sheet of paper is picked by the pick roller.
- The angled ramp (callout 1) profile functions as a barrier to prevent the remaining lower sheets from being picked with the top sheet.
- If more than one sheet of paper is being picked, the separation roller (callout 2) and separation pad (callout 3) stop the lower sheet of paper, which allows only the single top sheet to be pulled into the document feeder.
- The ultrasonic sensor, located behind the separator pad, ensures that the document feeder stops if more than one page is picked (HP Every page technology).
- The separation roller and separation pad are customer replaceable and have an expected life of 100,000 pages.

Document feeder paper stopper & fins

Figure 1-17 Paper stopper

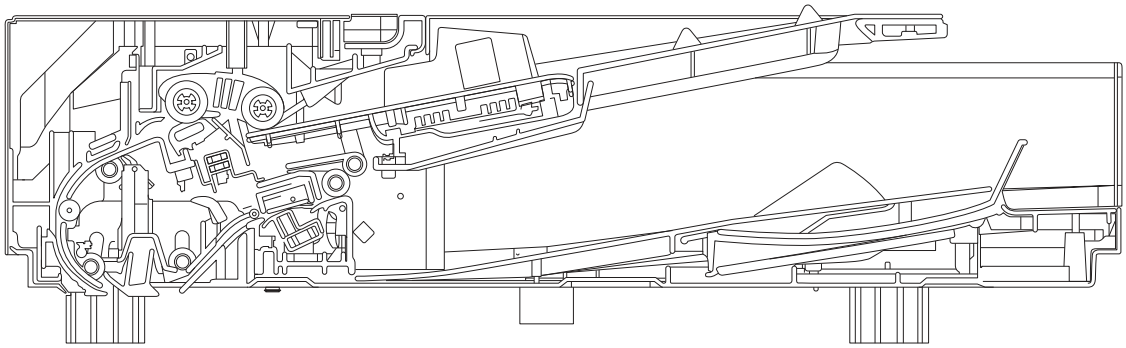

Paper stopper A4/legal

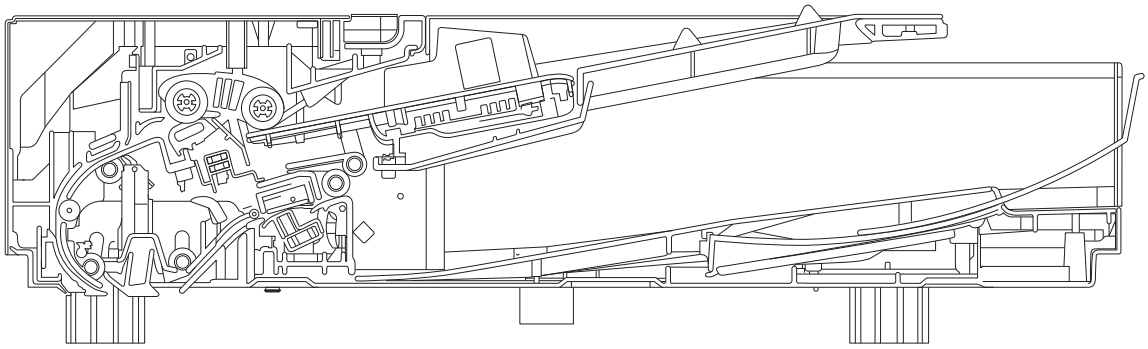

Paper stopper A3/legal

- The paper stopper on the output bin is adjustable to recieve A4 short edge/legal and A3/Ledger paper.
- An audible click sound can be heard when the paper stopper is pulled out and locked in position.
- A spring automatically retracts the paper stopper when the user pushes in to close it.
- A pair of guides function to neatly stack A4 long edge feed paper, and then collapse when a longer sized paper is used.

Document feeder simplex selector

- The simplex selector serves as a white or black background during the scanning process. The black background is used when certain automatic cropping and edge detection modes are enabled on the device.
- Switching between white and black mode is caused by rotating the deskew motor in reverse which actuates a cam and lever that toggle the selector.
- The simplex selector can sufficiently move (relative to the document feeder) to ensure consistent and stable contact with the document feeder-specific window of the simplex scanner.

Document feeder white backing

Figure 1-18 White backing and simplex selector

Item number	Description
1	White backing

- The white backing (mounted to the document feeder; callout 1) ensures that any paper placed on the flatbed scanner conforms to the glass, resulting in a uniform scan. The white color also enables scanning of transparent paper on the flatbed scanner window.
- The optical properties (color and reflectance) are sufficient to achieve the required image quality attributes on both transparent and non-transparent paper.
- The material used is UV-stabilized so its color will not change over time after being exposed to the light source from the scanner.

Document feeder duplex selector

Figure 1-19 Duplex selector

Item number	Description
1	Duplex selector

- The duplex selector is used as a white and black background for duplex scans. It also provides a white surface for duplex scanner calibration when the device is powered on.
- Switching between white, black, and calibration mode is caused by rotating the deskew motor in reverse, which actuates a cam and lever that toggle the selector.
- The duplex selector is biased toward the duplex scanner to keep the media conformed to the duplex scanner glass.
- The duplex selector is removable so that the surfaces of the selector and the scanner can be cleaned if scans start to have lines in them. To access the seclector, open the cover hatch, raise the input tray, push on the green latches, and then pull duplex selector out of the document feeder.

Document feeder hinge

Figure 1-20 Document feeder closed (book mode)

- The hinges of the document feeder allow the document feeder to move vertically and accommodate the placement of books and other objects up to 40 mm (1.57 in) in height onto the flatbed scanner window, while still being able to close on top of the book or object (with the bottom of the document feeder mostly parallel to the flatbed scanner window).
- The document feeder hinge provides a height adjustment of at least 40 mm (1.57 in) when a maximum downward force of 5 kg (11 lb) is applied at front edge of the document feeder, with the fulcrum (such as the spine of a book) centered in the scan window and parallel to its long axis.
- The document feeder is can withstand a downward force of at least 15 kg (33 lb) applied at the front edge center of the document feeder, and the fulcrum (such as the spine of a book) oriented parallel to the long axis of the scan window but located anywhere within the scan window, without breaking, deforming, detaching, or experiencing performance degradation.
- The document feeder hinge supports the document feeder in the open position and will prevent the document feeder from damage by being slammed.
- The hinge will hold the document feeder static in all positions higher than 125 mm (4.92 in) (as measured at the front of the document feeder). The force required to open or close the document feeder is less than 2.27 kg (5 lb).
- The hinge allows the document feeder to open to an angle of 70º from the horizontal.

Figure 1-21 Document feeder open (max opening 70º)

Pickup, feed, and delivery system

The DC controller controls the pickup, feed, and delivery system according to commands from the formatter.

The DC controller controls each block to pickup, feed and deliver paper. The pickup, feed, and delivery system consists of following three functional blocks:

- **Pickup-and-feed block**: From each pickup source to the fuser inlet
- **Fuser-and-delivery block**: From the fuser to each delivery destination
- **Duplex block**: From the duplex switchback assembly to duplex re-pickup assembly

Figure 1-22 Pickup, feed, and delivery system blocks

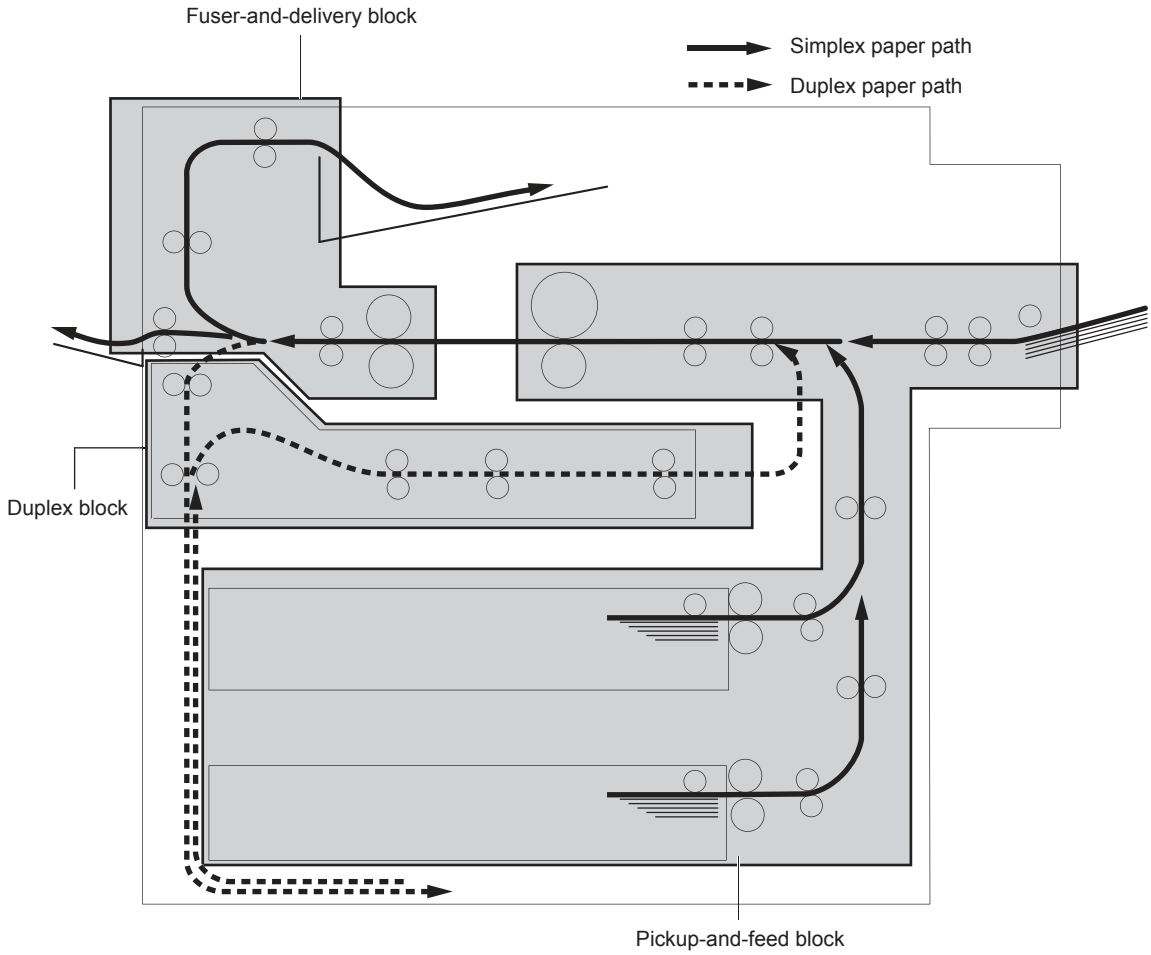

Photo sensors and switches

The following figure shows the sensors and switches for the pickup, feed, and delivery system.

Figure 1-23 Photo sensors and switches

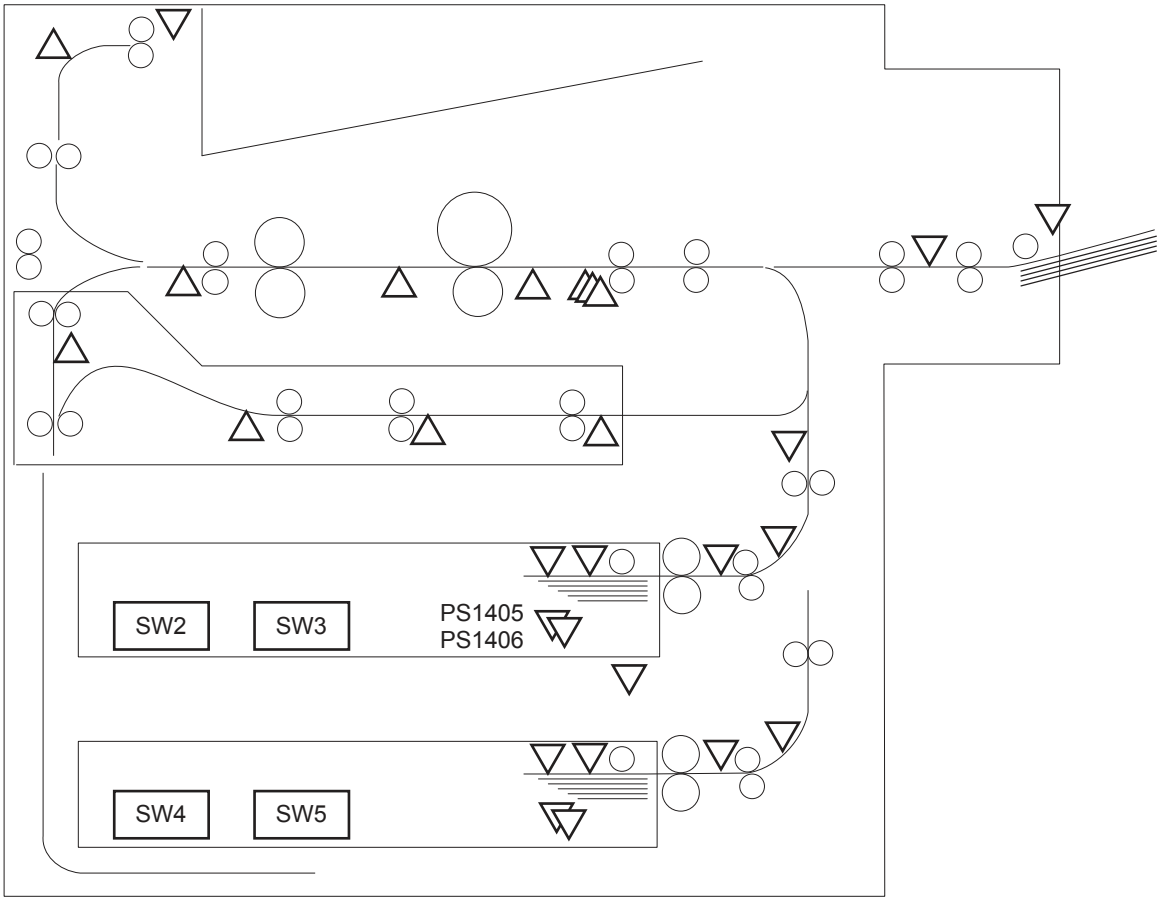

Table 1-13 Photo sensors and switches

Abbreviation	Component name
SW2	Tray 2 media-length switch
SW3	Tray 2 media-width switch
SW4	Tray 3 media-length switch
SW5	Tray 3 media-width switch
PS1	Right media-width sensor
PS2	Left media-width sensor
PS3	Center media-width sensor
PS4	TOP sensor
PS8	Tray 2 feed sensor C
PS9	Loop sensor
PS502	Fuser delivery sensor

Table 1-13 Photo sensors and switches (continued)

Abbreviation	Component name
PS1401	Tray 2 feed sensor B
PS1402	Tray 2 feed sensor A
PS1403	Tray 3 feed sensor B
PS1404	Tray 3 feed sensor A
PS1405	Tray 2 media-level sensor 1
PS1406	Tray 2 media-level sensor 2
PS1407	Tray 3 media-level sensor 1
PS1408	Tray 3 media-level sensor 2
PS1409	Tray 2 media-surface sensor
PS1410	Tray 2 media-presence sensor
PS1411	Tray 3 media-surface sensor
PS1412	Tray 3 media-presence sensor
PS1413	Cassette pickup roller home position sensor
PS1451	Face-down tray delivery sensor (M806 only)
PS1452	Face-down tray media-full sensor (M806 only)
PS2002	Duplex switchback sensor
PS2003	Duplex pre-registration sensor
PS2004	Duplex feed sensor
PS2005	Duplex residual media sensor
PS2501	Tray 1 media-presence sensor
PS2502	Tray 1 feed sensor

Motors and solenoids

Figure 1-24 Motors and solenoids (paper path)

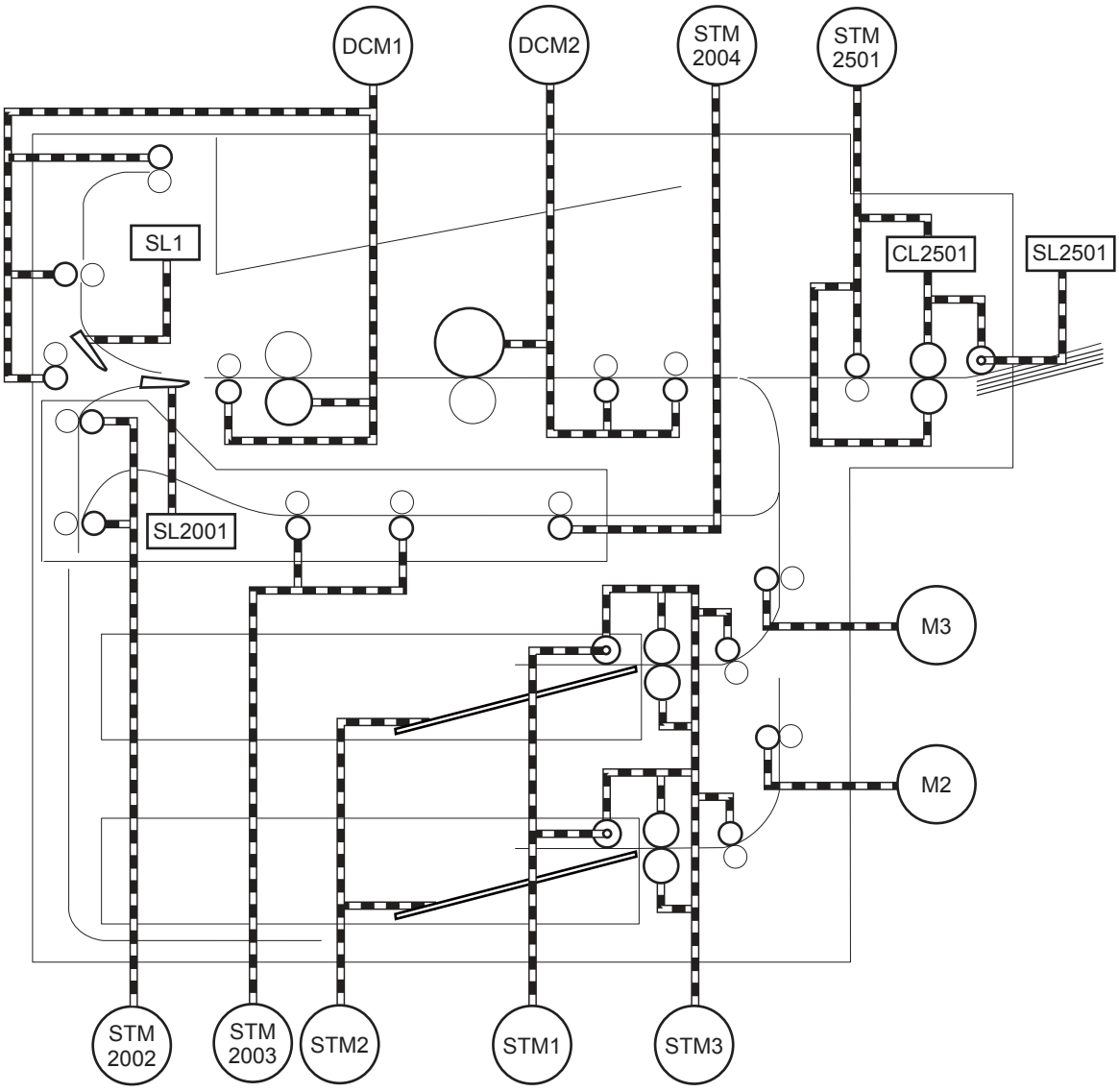

Table 1-14 Motors and solenoids (paper path)

Abbreviation	Component name
DCM1	Fuser motor
DCM2	Drum motor
M2	Tray 3 feed motor
M3	Tray 2 feed motor
STM1	Pickup motor
STM2	Lift-up motor
STM3	Cassette pickup motor
STM2002	Duplex switchback motor

Table 1-14 Motors and solenoids (paper path) (continued)

Abbreviation	Component name
STM2003	Duplex feed motor
STM2004	Duplex re-pickup motor
STM2501	Tray 1 pickup motor
SL1	Face-up solenoid (M806 only)
SL2001	Duplex flapper solenoid
SL2501	Tray 1 pickup solenoid
CL2501	Tray 1 feed clutch

Pickup and feed system

The pickup and feed system picks up single sheets from Tray 2 or Tray 3, feeds each sheet to the fuser unit, and delivers each sheet to the face-up bin or to the face-down bin.

When the product is turned on, the lifter lifts the stack of paper to the pickup area in preparation for printing. When the DC controller receives a print command, the pickup roller starts rotating and lowers to the paper surface. This feeds a sheet of paper to the feed rollers and to the pre-registration roller, which corrects the skew. After a short time, the sheet is fed to the photosensitive drum where the image is transferred onto the sheet. Then the sheet is fed to the fuser and delivered to a bin.

Media-size detection

The pickup and feed system includes a custom/standard switch and two media-size detection switches because either tray can accommodate custom paper sizes. If custom/standard switch is set to standard, the DC controller determines the width and length of the paper according to the size-detection switches. If the custom/standard switch is set to custom, the system requires the dimensions to be configured in the control panel. The width-detection switches also sense the presence of trays. If all of the width detection switches are off, the DC controller assumes that a tray is missing.

Media-level detection

The lifter detects the paper level in the trays using a blocking plate and two sensors. The lifter position indicates the paper level by shutting off the sensors. Paper level is based on the approximate number of sheets in the tray: full (200 or more sheets), high (100 to 200 sheets), middle (50 to 100 sheets), or low (less than 50 sheets).

Multi-feed prevention

The product prevents feeding of multiple sheets using a torque-limited separation roller. The separation roller rotates in the opposite direction of the feed roller. The torque limiter allows the separation roller to be turned backward as the top sheet feeds into the system, but it returns additional sheets to the tray.

Transparency media detection

The transparency sensor detects transparency media by reading a light that shines through a prism in the paper path. Paper passing through the paper path blocks the light indicating that it is not a transparency.

Fuser-wrapping jam detection

The paper path includes a mechanism to detect jams where paper wraps around fuser rollers. The DC controller sends signals to the pressure roller bias generation circuit, which applies the same bias values to the pressure roller and to the wrapping jam detection circuit. The jam-detection lever solenoid contacts the pressure roller to monitor its bias value. The wrapping jam detection circuit compares the original bias value to the bias value monitored on the pressure roller. If the values differ, the circuit signals the DC controller that a wrapping jam has occurred and to stop the printing operation.

Tray 1

Tray 1 accommodates a wide variety of paper. It picks up and feeds paper directly into the paper path.

Tray 1 driver PCA

Tray 1 includes a driver PCA with a four-bit microcomputer (CPU-IC2501) that controls the operational sequence and the serial communications with the DC controller. The CPU drives a motor, a solenoid, and a clutch according to commands from the DC controller.

Figure 1-25 Tray 1 operations

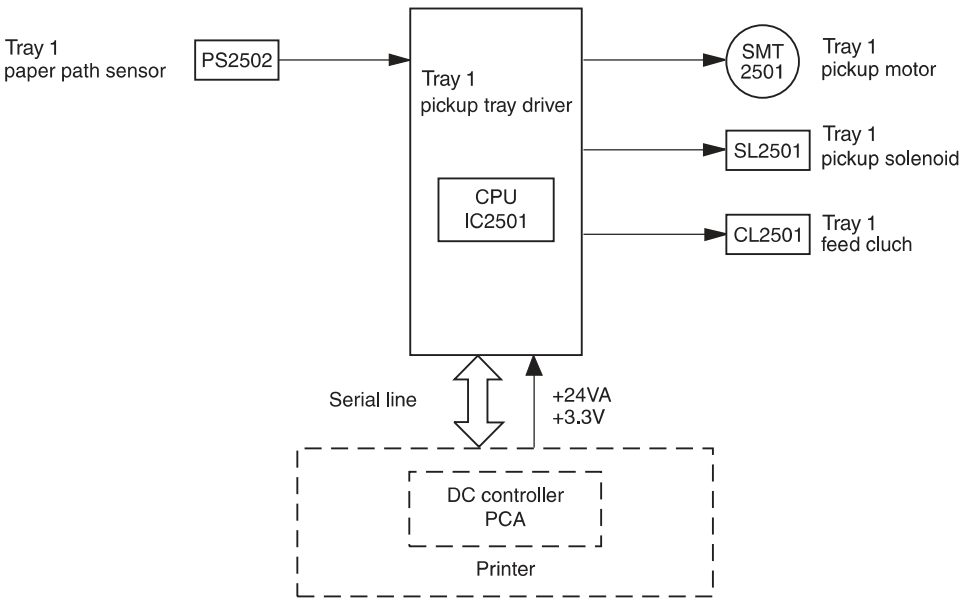

Tray 1 power supply

The power supply provides +24 volts DC to the motor, the solenoid, and the clutch, and +3.3 volts DC for the IC and the sensors.

Tray 1 sequence of operation

If no paper is detected by the paper path sensor, the Tray 1 pickup roller is returned to its initial position whenever any of the following occurs:

- The door is closed.
- The product returns from sleep mode.
- Tray 1 is installed.

Tray 1 picks up paper according to the following sequence:

1. Receives a pickup command
2. Turns on the pickup solenoid (SL2501) to places the pickup roller in contact with the paper surface
3. Turns on the feed clutch (CL2501) to rotate the pickup roller and the feed roller to pick up the paper
4. Feeds the paper to the between-page adjustment position, turns off CL2501, and feeds paper into the paper path
5. Receives a feed-stop command, stops the motor, and returns to a standby state

Tray 1 pickup and feed

The pickup roller moves up and down to feed paper into the paper path. This happens when the pickup solenoid moves the stopper away from the pickup cam allowing the cam to rotate. After completing one rotation, the cam contacts the stopper again holding it in place to bring the pickup roller back to its initial position.

Tray 1 prevents feeding of multiple sheets using a torque-limited separation roller. The separation roller rotates in the opposite direction of the feed roller. The torque limiter allows the separation roller to be turned backward as the top sheet feeds into the system, but it returns additional sheets to the tray.

Tray 1 jam detection

Tray 1 (multi-purpose tray) includes a paper path sensor (PS2502) that detects the leading edge of the paper as it is transported into the paper path. If the paper path sensor fails to detect the paper within a specified time after the pickup solenoid is turned on, the CPU stops the operation and notifies the DC controller of a jam. The CPU in Tray 1 can detect the following jams.

Table 1-15 Tray 1 jam detection

Jam type	Description
Pickup retry jam	The paper path sensor fails to detect the leading edge of the paper 1 second after turning on the pickup solenoid. The CPU stops the motor once, and then restarts it. Then it turns on the pickup solenoid 0.7 seconds later.
Pickup delay jam	The paper path sensor (PS2502) fails to detect the leading edge of paper within 3 seconds of turning on the pickup solenoid. The CPU stops the operation and sends an error message to the DC controller.
Residual jam	The paper path sensor detects paper when, as the product is turned on, the product is returning from sleep mode or the front cover is being closed.

Tray 2 and Tray 3

Tray 2 and Tray 3 accommodate up to 500 sheets each. The pickup-and-feed block picks one sheet of paper from Tray 2 and feeds it into the fuser.

Tray 2 cassette pickup

The operational sequence of the Tray 2 cassette pickup is as follows:

1. The product is turned on or the Tray 2 cassette is inserted.
2. The lift-up operation and the lifting plate spring move up the lifting plate to the position where the paper can be picked up.
3. The DC controller rotates the pickup motor when it receives a print command from the formatter.
4. The Tray 2 cassette (CST) feed roller rotates.
5. The Tray 2 cassette (CST) pickup solenoid is driven at a specified timing.
6. The Tray 2 cassette (CST) pickup roller rotates and picks up the paper.
7. The Tray 2 cassette (CST) separation roller removes any multiple-fed sheets.
8. One sheet of paper is fed into the product.

NOTE: The lift-up operation pushes up the lifting plate to keep the stack surface of paper at the pickup position.

Figure 1-26 Tray 2 cassette pickup operation

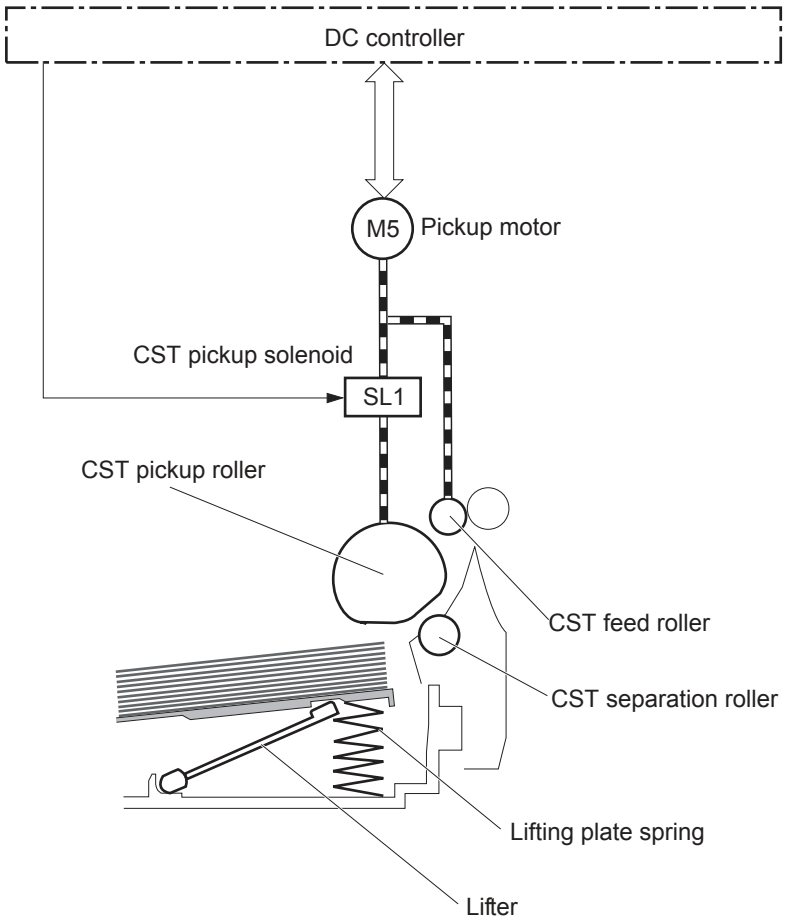

Tray 2 cassette multiple-feed prevention

The product uses a separation roller method to prevent multiple sheets of print media from entering the paper path. The Tray 2 cassette separation roller does not have its own driving force. Therefore the Tray 2 cassette separation roller follows the rotation of the Tray 2 cassette pickup roller.

During normal feed, when the product picks up one piece of paper, the Tray 2 cassette separation roller is driven by the Tray 2 cassette pickup roller through one sheet of paper. Thus the separation roller rotates in the paper feed direction.

During multiple-feed, when the product picks up more than one piece of paper, the low friction force between the sheets weakens the driving force from the Tray 2 cassette pickup roller. In addition, some braking force is always applied to the Tray 2 cassette separation roller, so the weak rotational force of the pickup roller is not enough to rotate the separation roller. Therefore, the separation roller holds back any multiple-fed sheets, and one sheet of paper is fed into the product.

Figure 1-27 Tray 2 cassette multiple-feed prevention

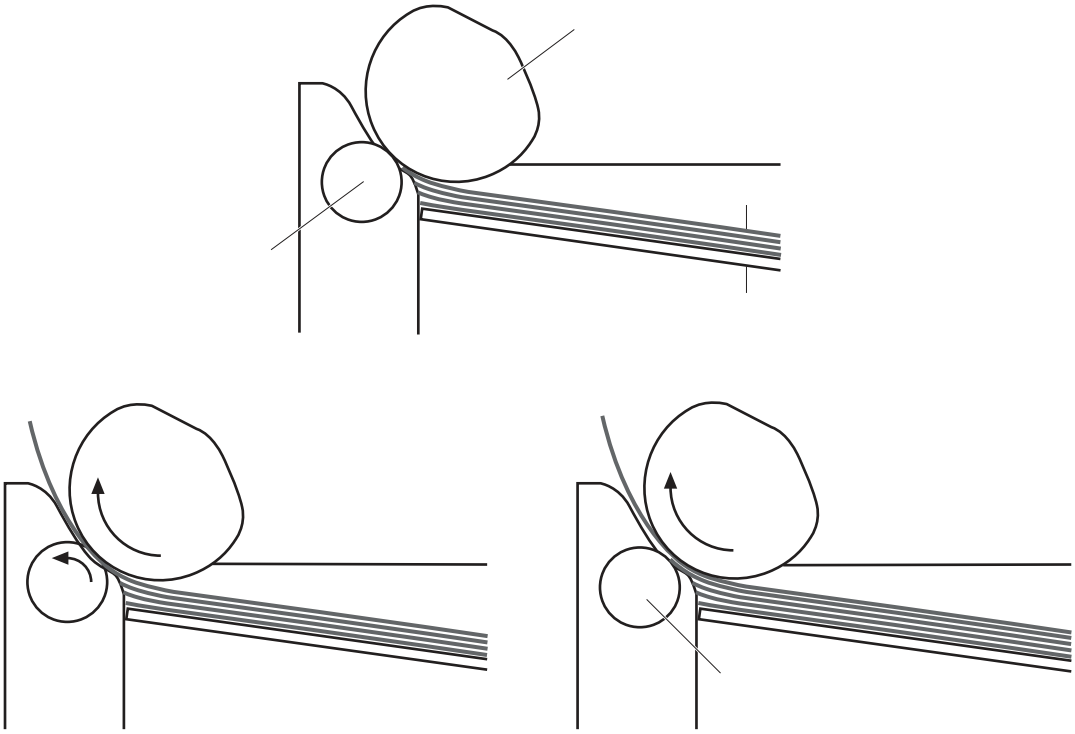

Tray 2 cassette media-size detection and Tray 2 cassette-presence detection

The DC controller detects the size of paper loaded in the Tray 2 cassette by using the Tray 2 cassette-media-end switch and Tray 2 cassette-media-width switch.

The DC controller also detects the presence of the cassette by using the Tray 2 cassette-media-end switch. The DC controller notifies the formatter if the Tray 2 cassette is absent.

Table 1-16 Stapler/stacker delivery modes

Paper size	Cassette-media-width switch			Cassette-media-end switch		
	Top switch	Center switch	Bottom switch	Top switch[1]	Center switch	Bottom switch
A4	On	On	On	See footnote	Off	Off
Letter	On	On	Off		Off	Off
B5	On	Off	Off		Off	Off
Executive	Off	Off	Off		Off	Off
A5-R	Off	On	On		Off	Off
B5-R	Off	Off	On		Off	Off
Letter-R	On	Off	On		Off	Off
A4-R	On	Off	On		Off	On
A3	On	On	On		On	On
11 X 17	On	On	Off		On	On
B4	On	Off	Off		On	On
Legal	On	Off	On		On	On

[1] The top Tray 2 cassette-media-end switch detects the presence of the Tray 2 cassette. It turns off when the Tray 2 cassette is present and turns on when the Tray 2 cassette is absent.

Tray 2 cassette lift-up operation

The cassette lift-up operation keeps the paper stack surface at the correct pickup position if either of the following conditions occur:

- Product power is turned on.
- Tray 2 cassette is installed.

The following list describes the sequence of the Tray 2 cassette lift-up operation:

a. The Tray 2 cassette lifter motor rotates to move the lifter rack toward the Tray 2 cassette-mediastack surface sensor.

b. As the lifter rack moves, the lifter moves up.

c. The Tray 2 cassette lifter motor stops when the Tray 2 cassette-media-stack surface sensor detects the lifter rack.

The DC controller determines a Tray 2 cassette lifter motor failure and notifies the formatter if the Tray 2 cassette-media-stack surface sensor does not detect the lifter rack within a specified period after the Tray 2 cassette lifter motor starts rotating.

Figure 1-28 Tray 2 cassette lift-up operation

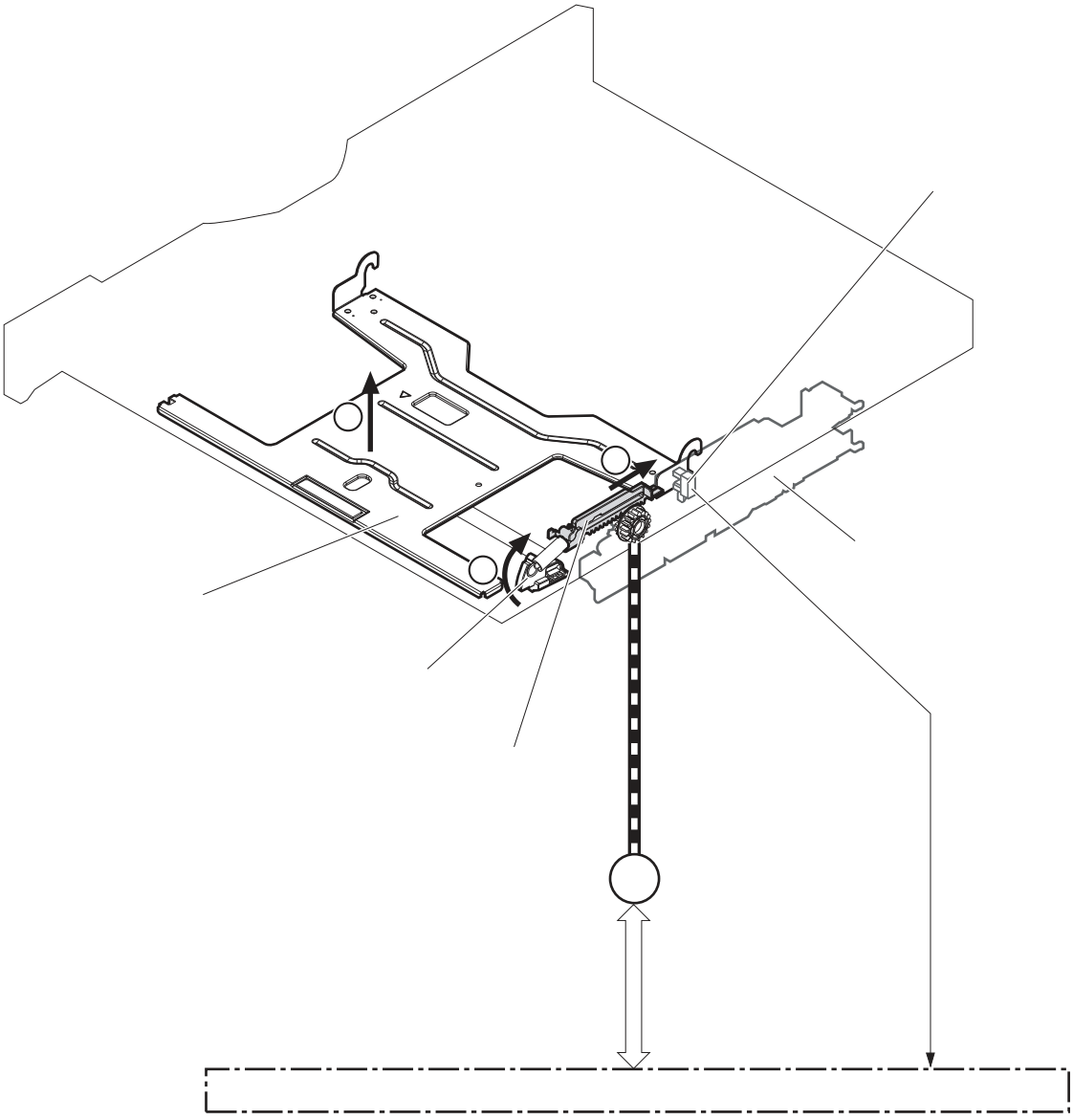

Tray media-presence detection

The Tray 2 cassette-media-out sensor detects the presence of paper in the Tray 2 cassette.

The DC controller notifies the formatter when the Tray 2 cassette-media-out sensor detects the media is absent.

Figure 1-29 Tray 2 cassette media-presence detection

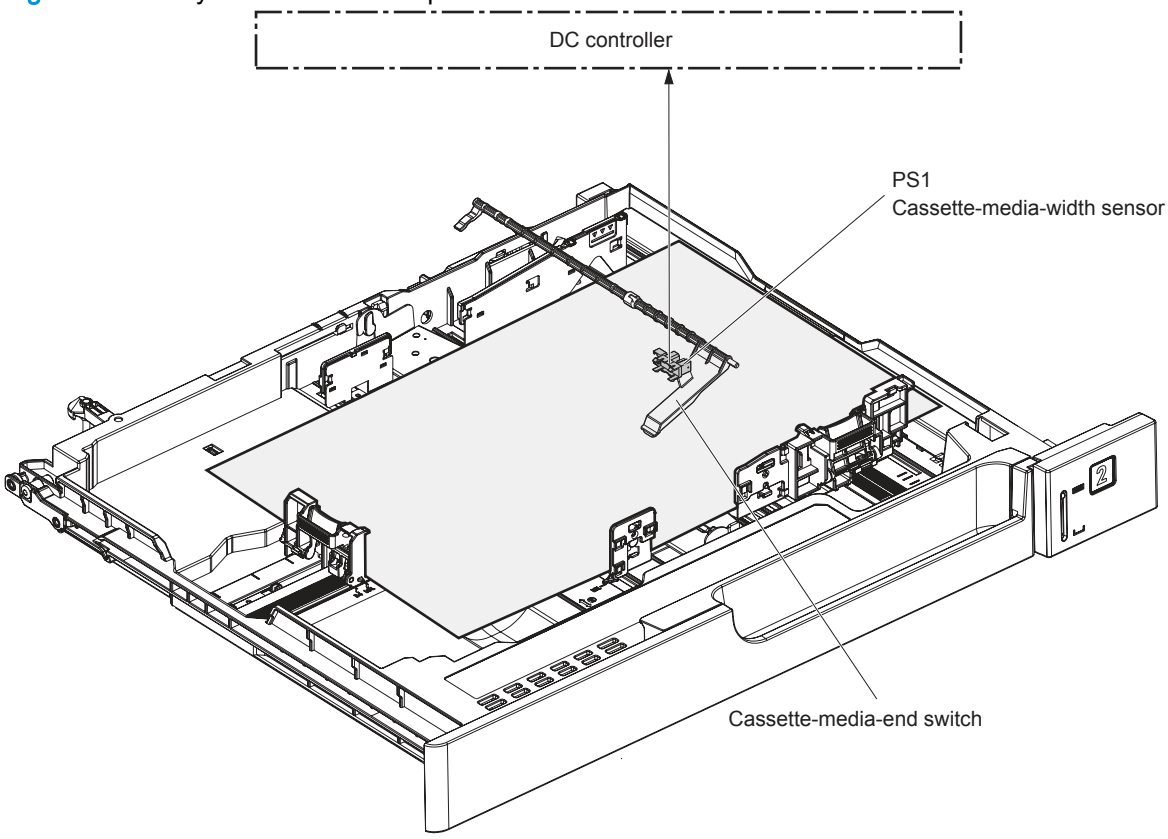

Jam detection

The product uses the following sensors to detect the presence of paper and to check whether the paper is being fed correctly or has jammed.

Figure 1-30 Sensors for jam detection

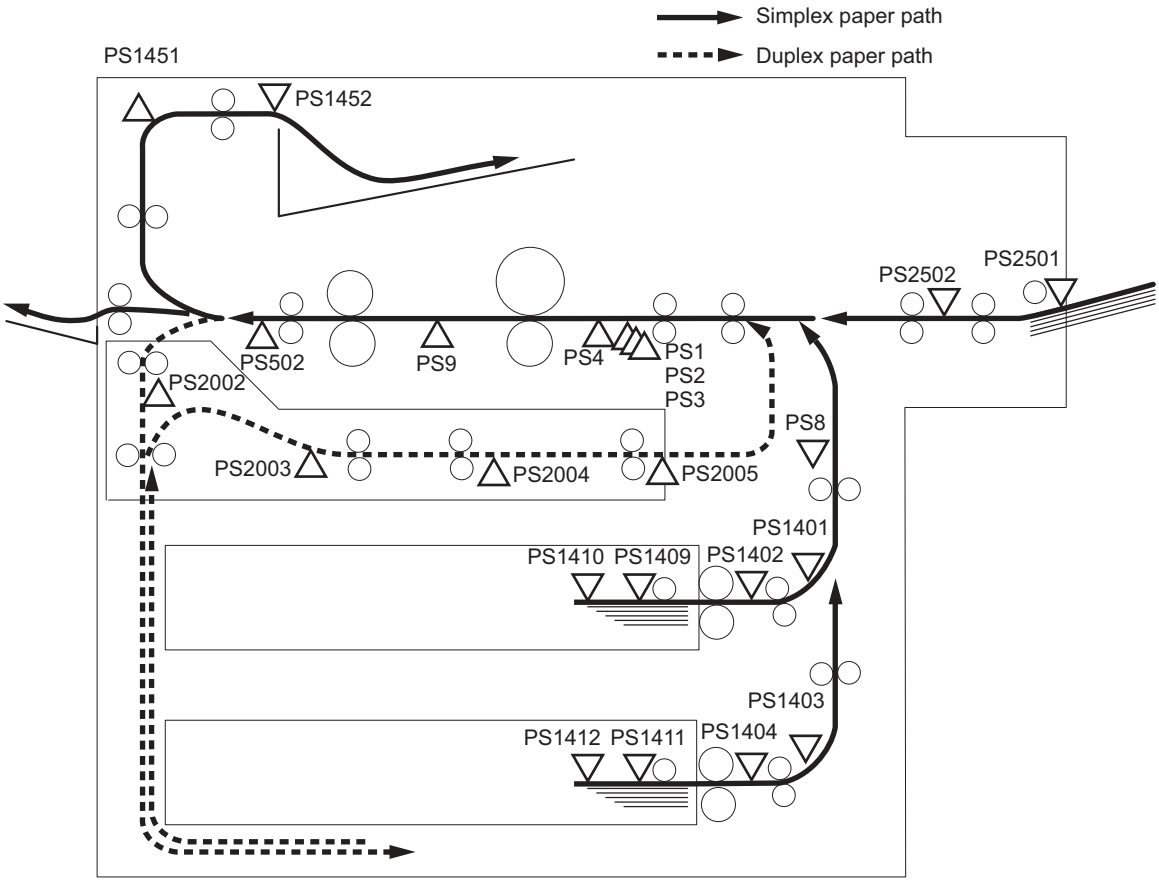

Table 1-17 Jam detection sensors

Abbreviation	Component name
PS1	Right media-width sensor
PS2	Left media-width sensor
PS3	Center media-width sensor
PS4	TOP sensor
PS8	Tray 2 feed sensor C
PS9	Loop sensor
PS502	Fuser delivery sensor
PS1401	Tray 2 feed sensor B
PS1402	Tray 2 feed sensor A
PS1403	Tray 3 feed sensor B
PS1404	Tray 3 feed sensor A
PS1451	Face-down tray delivery sensor (M806 only)

Table 1-17 Jam detection sensors (continued)

Abbreviation	Component name
PS1452	Face-down tray media-full sensor (M806 only)
PS2002	Duplex switchback sensor
PS2003	Duplex pre-registration sensor
PS2004	Duplex feed sensor
PS2005	Duplex residual media sensor
PS2502	Tray 1 feed sensor

Table 1-18 Jams detected by the DC controller

Jam	Supported feature
No pick jam 1	Yes
No pick jam 2	Yes
No pick jam 3	Yes
No pick jam 4	No
Pickup stay jam 1	Yes
Pickup stay jam 2	No
Pickup stay jam 3	No
Pickup stay jam 4	No
Fuser delivery delay jam 1	Yes
Fuser delivery delay jam 2	No
Fuser delivery delay jam 3	No
Fuser delivery delay jam 4	No
Fuser delivery stay jam 1	Yes
Fuser delivery stay jam 2	N/A
Fuser delivery stay jam 3	No
Fuser delivery stay jam 4	No
Residual paper jam 1	Yes
Residual paper jam 2	N/A
Residual paper jam 3	No
Residual paper jam 4	No
Door open jam 1	Yes
Door open jam 2	No
Door open jam 3	No
Door open jam 4	No

Table 1-18 Jams detected by the DC controller (continued)

Jam	Supported feature
Fuser wrapping jam 1	Yes
Fuser wrapping jam 2	No
Fuser wrapping jam 3	No
Fuser wrapping jam 4	No

The product detects the following jams.

Table 1-19 Jam detection

Jam	Causes and conditions
Pickup 1 delay jam	Media fails to reach Tray 2 feed sensor A (PS1402) or Tray 3 feed sensor A (PS1404) within 3.2 seconds after pickup begins.
Pickup 2 delay jam	• Media fails to reach Tray 2 feed sensor B (PS1401) or Tray 3 feed sensor B (PS1403) within 3.0 seconds after Tray 2 feed sensor A (PS1402) or Tray 3 feed sensor A (PS1404) detects the leading edge. • Media fails to reach the registration paper sensor (PS2) within 4.0 seconds after Tray 2 feed sensor B (PS1401) detects the leading edge of the media or within 4.5 seconds after Tray 3 feed sensor B (PS1403) detects the leading edge.
Fuser delivery 1 delay jam	The leading edge fails to reach the fuser delivery sensor (PS502) within 1.4 seconds after the /VSYNC signal.
Fuser delivery 2 delay jam	The leading edge fails to reach the fuser jam sensor (PS501) within 1.6 seconds after the /VSYNC signal.
Fuser delivery stationary jam	The trailing edge fails to clear the fuser delivery sensor (PS502) within the specified time (3.4 seconds for A3 media or 2.5 seconds for A4 media) after the /VSYNC signal.
Face-down delivery delay jam	The leading edge fails to reach the face-down bin delivery sensor (PS1451) within 2.4 seconds after the /VSYNC signal.
Face-down delivery stationary jam	The leading edge fails to clear the face-down bin delivery sensor (PS1451) within the specified time (4.3 seconds for A3 media or 3.4 seconds for A4 media) after the /VSYNC signal.

Table 1-19 Jam detection (continued)

Jam	Causes and conditions
Door open jam	The following sensors detect media in the system when the door is opened or closed: • Registration paper sensor (PS2) • Fuser delivery sensor (PS501) • Fuser jam sensor (PS502) • Face-down bin delivery sensor (PS1451) • Tray 2 feed sensor A (PS1401) • Tray 2 feed sensor B (PS1401) • Tray 3 feed sensor A (PS1404) • Tray 3 feed sensor B (PS1403)

Residual jam	The following conditions indicate a residual jam:
	• The product is turned on, and the fuser delivery sensor (PS502) and the fuser jam sensor (PS501) have detected media during the startup process.
	• The DC controller has not received an automatic delivery command three minutes after a jam that should include the command was cleared.
	• At least one of the following sensors detects media after a jam was cleared, the jammed media was delivered, the product is turned on, and the fuser is at target temperature:
	  ◦ Registration paper sensor (PS2)
	  ◦ Fuser delivery sensor (PS501)
	  ◦ Fuser jam sensor (PS502)
	  ◦ Tray 2 feed sensor B (PS1401)
	  ◦ Tray 3 feed sensor B (PS1403)
	  ◦ Face-down bin delivery sensor (PS1451)

3,500-sheet high-capacity input (HCI) feeder

The 3,500-sheet paper deck is optionally installed at the bottom of the product. The 3,500-sheet paper deck picks up one sheet of paper and feeds it to the product.

The following figure shows the installation and the paper path.

Figure 1-31 HCI paper path

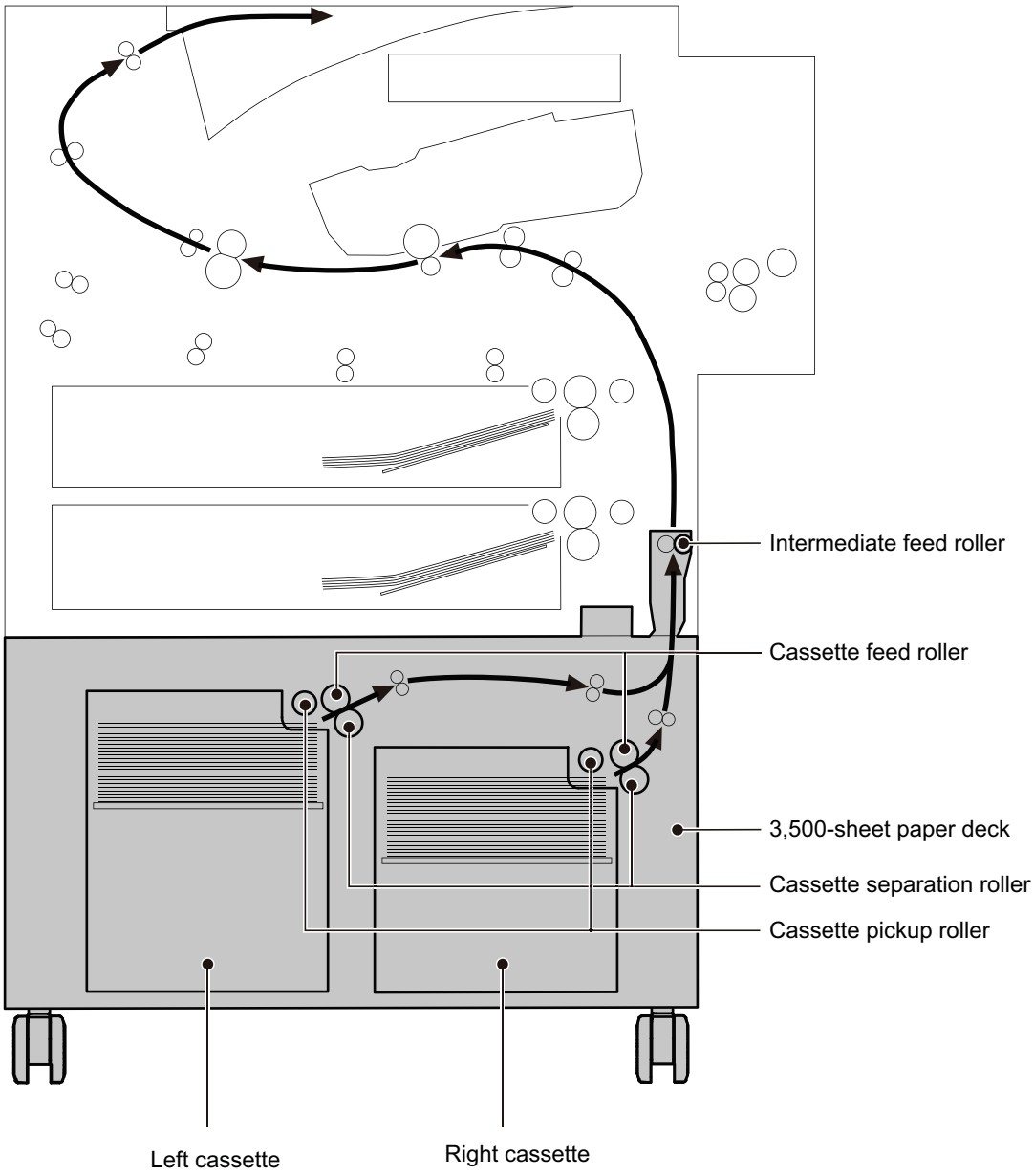

The HCI controller controls the operational sequence of the 3,500-sheet paper deck.

Figure 1-32 HCI signal flow

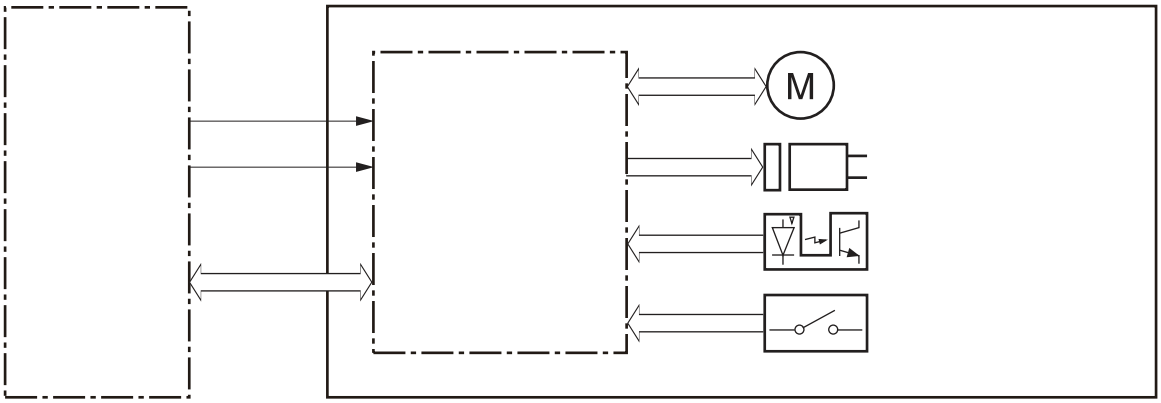

Table 1-20 HCI electrical components

Component type	Abbreviation	Component name
Motor	M3301	HCI right cassette pickup motor
	M3302	HCI right cassette lifter motor
	M3303	HCI left cassette lifter motor
	M3304	HCI left cassette pickup motor
	M3305	HCI intermediate feed motor
Solenoid	SL3301	HCI right cassette pickup solenoid
	SL3302	HCI left cassette pickup solenoid
Photointerrupter	PS3101	HCI right cassette lift-up media-surface sensor
	PS3102	HCI right cassette pickup coordinate media-surface sensor
	PS3103	Right cassette media-presence sensor
	PS3201	HCI left cassette lift-up media-surface sensor
	PS3202	HCI left cassette pickup coordinate media-surface sensor
	PS3203	HCI left cassette media-presence sensor
	PS3301	HCI media feed sensor
	PS3302	HCI right cassette media feed sensor
	PS3303	HCI right cassette media size sensor
	PS3304	HCI left cassette media size sensor
	PS3305	HCI left cassette media feed sensor
	PS3306	HCI side feed guide open detection sensor
	PS3307	HCI intermediate unit presence sensor
	PS3308	HCI right cassette media-level sensor
	PS3309	HCI left cassette media-level sensor

Table 1-20 HCI electrical components (continued)

Component type	Abbreviation	Component name
Switch	SW3301	HCI right door open detection switch
	SW3302	HCI right cassette open detection switch
	SW3303	HCI left cassette open detection switch

HCI electrical components

The 3,500-sheet high-capacity input (HCI) feeder has two cassettes and each of them operates in the same manner.

Figure 1-33 HCI electrical components

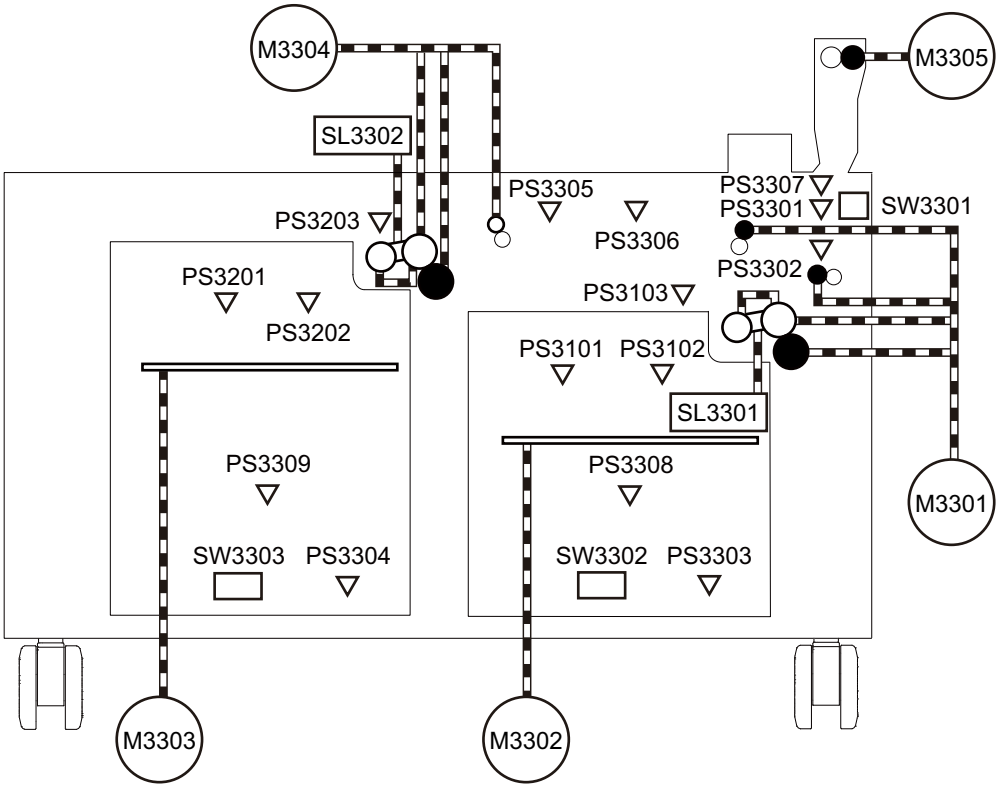

Table 1-21 HCI electrical components

Abbreviation	Component name	Signal
M3301	Right cassette pickup motor	HCI RIGHT CASSETTE PICKUP MOTOR CONTROL signal
M3302	Right cassette lifter motor	HCI RIGHT CASSETTE LIFTER MOTOR CONTROL signal
M3303	Left cassette lifter motor	HCI LEFT CASSETTE LIFTER MOTOR CONTROL signal
M3304	Left cassette pickup motor	HCI LEFT CASSETTE PICKUP MOTOR CONTROL signal
SL3301	Right cassette pickup solenoid	HCI RIGHT CASSETTE PICKUP SOLENOID signal

Table 1-21 HCI electrical components (continued)

Abbreviation	Component name	Signal
SL3302	Left cassette pickup solenoid	HCI LEFT CASSETTE PICKUP SOLENOID signal
CL3301	Right cassette pickup clutch	HCI RIGHT CASSETTE PICKUP CLUTCH signal
CL3302	Left cassette pickup clutch	HCI LEFT CASSETTE PICKUP CLUTCH signal
SW3301	Right door open detection switch	HCI RIGHT DOOR OPEN DETECTION signal
SW3302	Right cassette open detection switch	HCI RIGHT CASSETTE OPEN DETECTION signal
SW3303	Left cassette open detection switch	HCI LEFT CASSETTE OPEN DETECTION signal
PS3101	Right cassette lift-up media-surface sensor	HCI RIGHT CASSETTE MEDIA STACK SURFACE 2 signal
PS3102	Right cassette pickup coordinate media-surface sensor	HCI RIGHT CASSETTE MEDIA STACK SURFACE 1 signal
PS3103	Right cassette media-presence sensor	HCI RIGHT CASSETTE MEDIA OUT signal
PS3201	Left cassette lift-up media-surface sensor	HCI LEFT CASSETTE MEDIA STACK SURFACE 2 signal
PS3202	Left cassette pickup coordinate media-surface sensor	HCI LEFT CASSETTE MEDIA STACK SURFACE 1 signal
PS3203	Left cassette media-presence sensor	HCI LEFT CASSETTE MEDIA OUT signal
PS3301	Media-feed sensor	HCI MEDIA FEED signal
PS3302	Right cassette media-feed sensor	HCI RIGHT CASSETTE MEDIA FEED signal
PS3303	Right cassette media-size sensor	HCI RIGHT CASSETTE MEDIA SIZE signal
PS3304	Left cassette media-size sensor	HCI LEFT CASSETTE MEDIA SIZE signal
PS3305	Left cassette media-feed sensor	HCI LEFT CASSETTE MEDIA FEED signal
PS3306	Side feed guide open detection sensor	HCI LONG EDGE FEED GUIDE OPEN DETECTION signal
PS3308	Right cassette media-level sensor	HCI RIGHT CASSETTE MEDIA LEVEL signal
PS3309	Left cassette media-level sensor	HCI LEFT CASSETTE MEDIA LEVEL signal

HCI motor control

The HCI has five motors in each cassette for paper-feed and cassette lift-up.

Figure 1-34 HCI motors

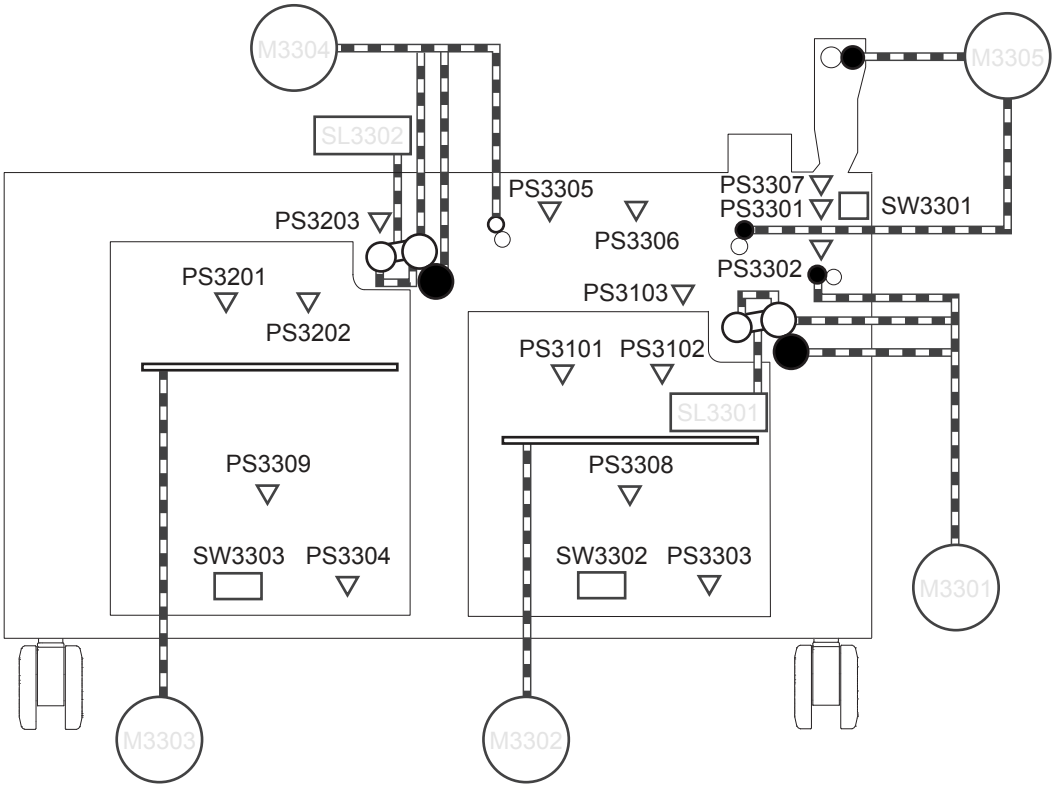

Table 1-22 HCI motors

Abbreviation	Component name	Components driven
M3301	HCI right cassette pickup motor	Pickup roller, separation roller, and feed roller for the HCI right cassette
M3302	HCI right cassette lifter motor	Lifter for the HCI right cassette
M3303	HCI left cassette lifter motor	Lifter for the HCI left cassette
M3304	HCI left cassette pickup motor	Pickup roller, separation roller, and feed roller for the HCI left cassette
M3305	HCI intermediate feed motor	Intermediate feed roller

HCI motor failure detection

The HCI controller determines the following motor failures.

Table 1-23 HCI motor failures

Failure detection function	Supported feature
Right cassette pickup motor failure detection	No
Right cassette lifter motor failure detection	Yes
Left cassette lifter motor failure detection	Yes
Left cassette pickup motor failure detection	No

The formatter is notified is a jam is caused when the cassette pickup motors fail.

HCI pickup-and-feed operation

The 3,500-sheet paper deck picks up one sheet of paper in the paper deck cassette and feeds it to the product. The 3,500-sheet paper deck has two cassettes and each of them operates in the same manner. This section uses the left cassette for explanation.

Figure 1-35 HCI pickup-and-feed components

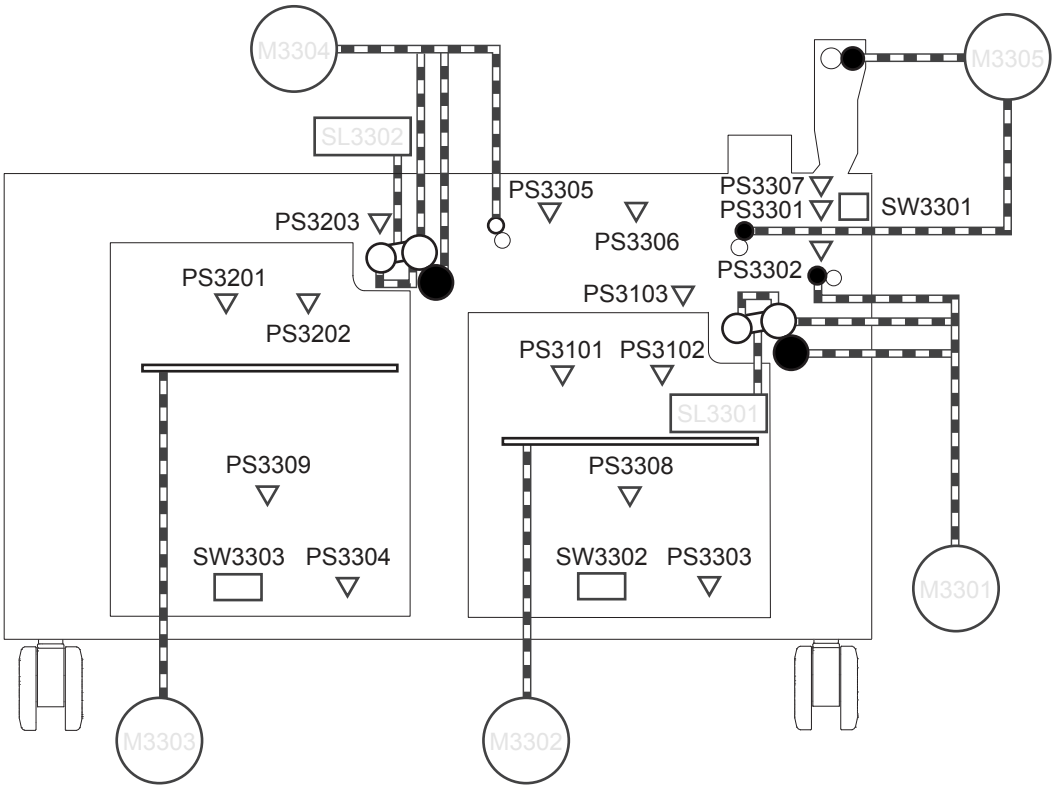

Abbreviation	Component name
M3301	Right cassette pickup motor
M3302	Right cassette lifter motor
M3303	Left cassette lifter motor
M3304	Left cassette pickup motor
M3305	Intermediate feed motor
SL3301	Right cassette pickup solenoid
SL3302	Left cassette pickup solenoid
SW3301	Right door open detection switch
SW3302	Right cassette open detection switch
SW3303	Left cassette open detection switch
PS3101	Right cassette lift-up media-surface sensor
PS3102	Right cassette pickup coordinate media-surface sensor
PS3103	Right cassette media-presence sensor
PS3201	Left cassette lift-up media-surface sensor

Abbreviation	Component name
PS3202	Left cassette pickup coordinate media-surface sensor
PS3203	Left cassette media-presence sensor
PS3301	Media feed sensor
PS3302	Right cassette media feed sensor
PS3303	Right cassette media-size sensor
PS3304	Left cassette media-size sensor
PS3305	Left cassette media feed sensor
PS3306	Side feed guide open detection sensor
PS3307	Intermediate unit presence sensor
PS3308	Right cassette media-level sensor
PS3309	Left cassette media-level sensor

HCI lift-up operation

The HCI lifts up the tray to keep the surface of the paper at the pickup position whenever any of the following occur:

- The product is turned on.
- The cassette is installed.
- The paper stack surface lowers as a result of the pickup operation.

Figure 1-36 HCI lift-up operation mechanism

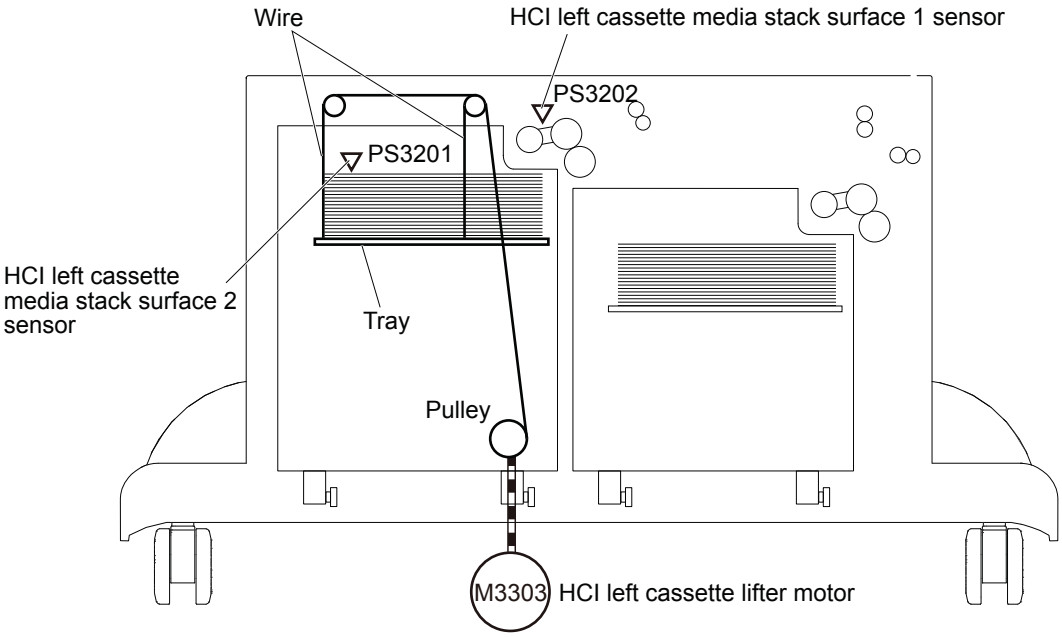

The figure above illustrates the mechanism for the left cassette, but each HCI cassette has the same mechanism.

The operational sequence of the lift-up is as follows:

1. The HCI cassette lifter motor rotates the pulley to reel the wire. The tray moves up.
2. The HCI cassette lifter motor stops when the HCI cassette media stack surface sensor detects the paper surface.
3. The HCI cassette lifter motor rotates again when the HCI cassette media stack surface sensor detects that the stack surface lowers during a print operation.

The HCI controller determines an HCI cassette lifter motor failure and notifies the formatter through the DC controller when the HCI cassette media stack surface 2 sensor does not detect the paper surface within a specified period from when the HCI cassette lifter motor starts rotating.

HCI cassette media-size detection and cassette-presence detection

The HCI controller detects whether the paper loaded in the cassette is A4-R or Letter-R size and notifies to the formatter through the DC controller.

The HCI controller also detects the presence of the cassette by monitoring the cassette open detection switch and notifies to the formatter through the DC controller.

These detections are not executed during active off condition.

Additional HCI pickup and feed functions

Table 1-24 Additional HCI Pickup and feed functions

Function	Supported feature
Right cassette lift-up control	Yes
Left cassette lift-up control	Yes
Right cassette presence detection	Yes
Left cassette presence detection	Yes
Right cassette media-size detection	Yes
Left cassette media-size detection	Yes
Right cassette media-surface detection	Yes
Left cassette media-surface detection	Yes
Right cassette media-presence detection	Yes
Left cassette media-presence detection	Yes
Right cassette media-level detection	Yes
Left cassette media-level detection	Yes
Right cassette multiple-feed prevention mechanism	Yes
Left cassette multiple-feed prevention mechanism	Yes
Automatic delivery	Yes

HCI jam detection

The 3,500-sheet high-capacity input (HCI) feeder uses the following sensors to detect the presence of the paper and to check whether the paper is being fed correctly or has jammed:

- Media-feed sensor (PS3301)
- Right cassette media-feed sensor (PS3302)
- Left cassette media-feed sensor (PS3305)

Figure 1-37 HCI jam sensor location

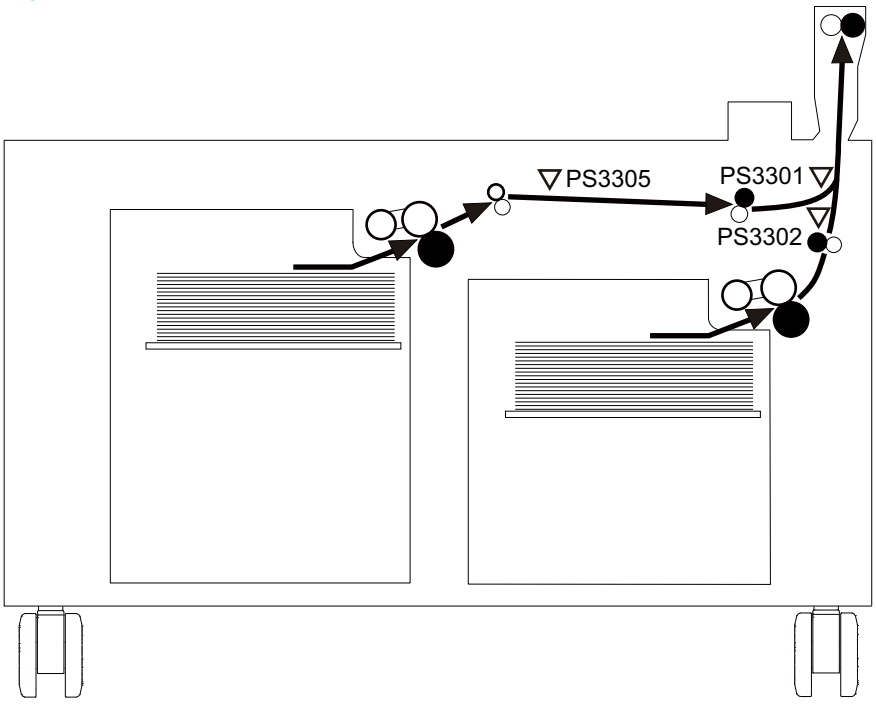

Jam	Causes and conditions
HCI no pick jam 1	• **From right cassette** The right cassette media-feed sensor does not detect the leading edge of paper within a specified period from when the right cassette pickup solenoid is turned on. • **From left cassette** The left cassette media-feed sensor does not detect the leading edge of paper within a specified period from when the left cassette pickup solenoid is turned on.
HCI no pick jam 3	• **From right cassette** The media-feed sensor does not detect the leading edge of paper within a specified period from when the right cassette media-feed sensor detects the leading edge. • **From left cassette** The media-feed sensor does not detect the leading edge of paper within a specified period from when the left cassette media-feed sensor detects the leading edge.
HCI no pick jam 4	The MP tray (Tray 1) media-feed sensor in the product does not detect the leading edge of paper within a specified period from when the media-feed sensor detects the leading edge.

Jam	Causes and conditions
HCI Residual paper jam	Any one of the following sensor detects a paper presence when the product is turned off, when the door is closed or when the product is released from Power-save mode (Sleep mode, active off or inactive off): • Media-feed sensor • Right cassette media-feed sensor • Left cassette media-feed sensor
HCI right door open jam	The right door open is detected during a paper feed operation.

Stapler/stacker and stapler/stacker with hole punch

The stapler/stacker is optionally installed at the side of the product. The stapler/stacker delivers the printed paper to the output bin or delivers the set of printed paper after stapling. The stapler/stacker with hole puncher assembly operates hole punching in addition to the standard stapler/stacker function.

The stacker controller controls the operational sequence of the stapler/stacker. The stacker controller and the hole punch controller control the operational sequence of the stapler/stacker with hole-puncher assembly.

The product separation sensor detects whether the stapler/stacker is connected to the product.

Figure 1-38 Stapler/stacker paper path

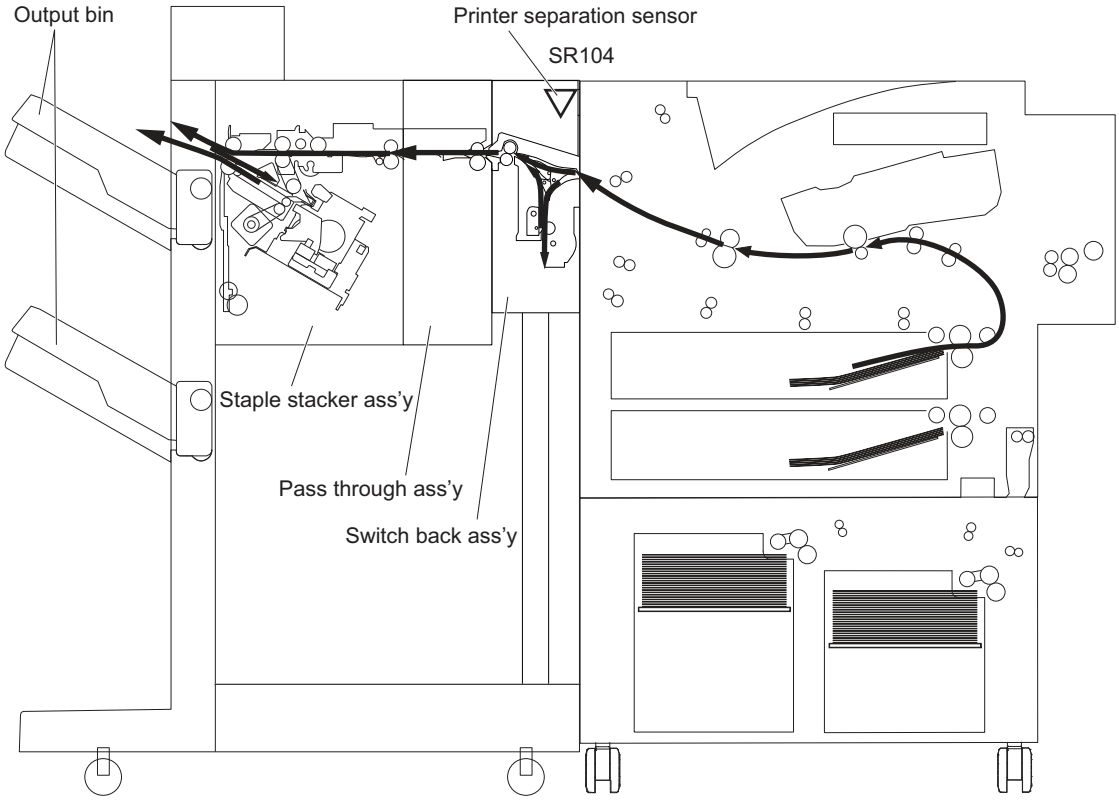

Figure 1-39 Hole punch paper path

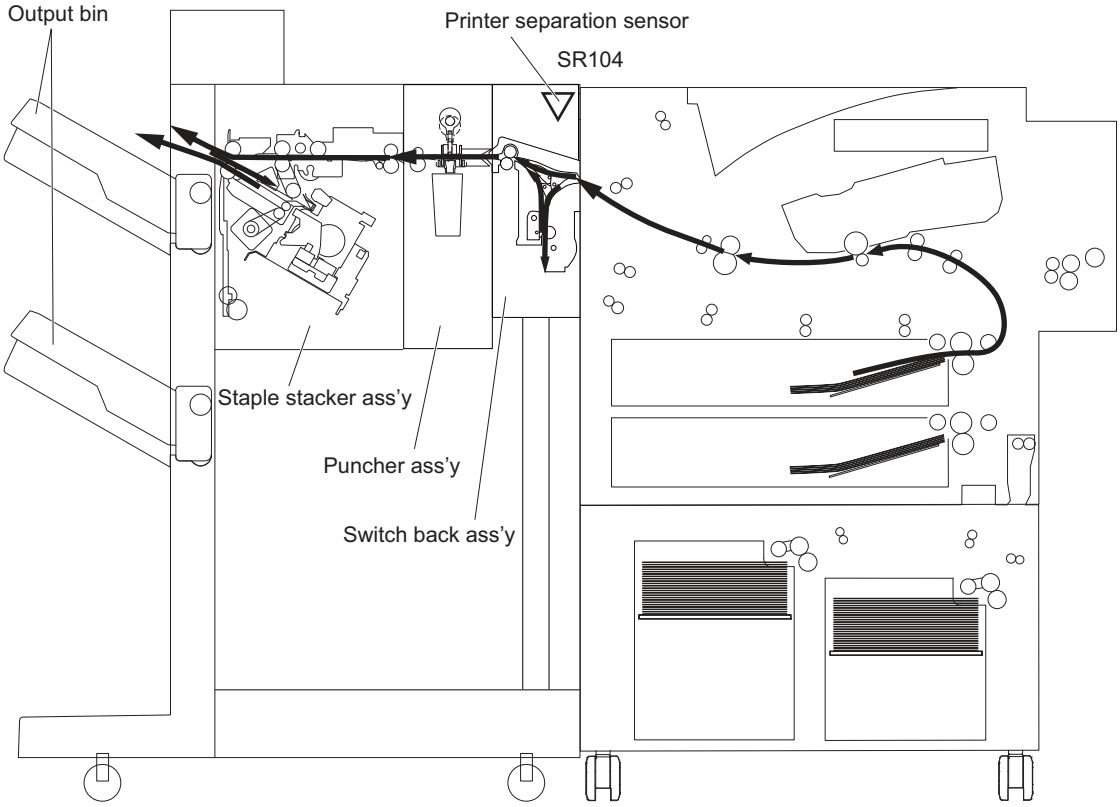

The stapler/stacker supports the following delivery modes for both the straight through paper path and the duplex paper path:

- Staple
- Offset

These delivery modes are independent of each other and can be used in any combination.

Table 1-25 Stapler/stacker delivery modes

Feed	Staple	Punch	Offset	Supported feature
Straight	No	N/A	No	Yes
Straight	No	N/A	Yes	No
Straight	Yes	N/A	No	No
Straight	Yes	N/A	Yes	No
Switchback	No	N/A	No	Yes
Switchback	No	N/A	Yes	Yes
Switchback	Yes	N/A	No	Yes
Switchback	Yes	N/A	Yes	No

The stapler/stacker with hole punch supports the following delivery modes for both the straight through paper path and the duplex paper path:

- Staple
- Hole punch
- Offset

These delivery modes are independent of each other and can be used in any combination.

Table 1-26 Stapler/stacker with hole punch delivery modes

Feed	Staple	Punch	Offset	Supported feature
Straight	No	No	No	Yes
Straight	No	No	Yes	No
Straight	Yes	No	No	No
Straight	Yes	No	Yes	No
Straight	No	Yes	No	No
Straight	No	Yes	Yes	No
Straight	Yes	Yes	No	No
Straight	Yes	Yes	Yes	No
Switchback	No	No	No	Yes
Switchback	No	No	Yes	Yes
Switchback	Yes	No	No	Yes
Switchback	Yes	No	Yes	No
Switchback	No	Yes	No	Yes
Switchback	No	Yes	Yes	Yes
Switchback	Yes	Yes	No	Yes
Switchback	Yes	Yes	Yes	No

Figure 1-40 Stapler/stacker controller signal flow diagram

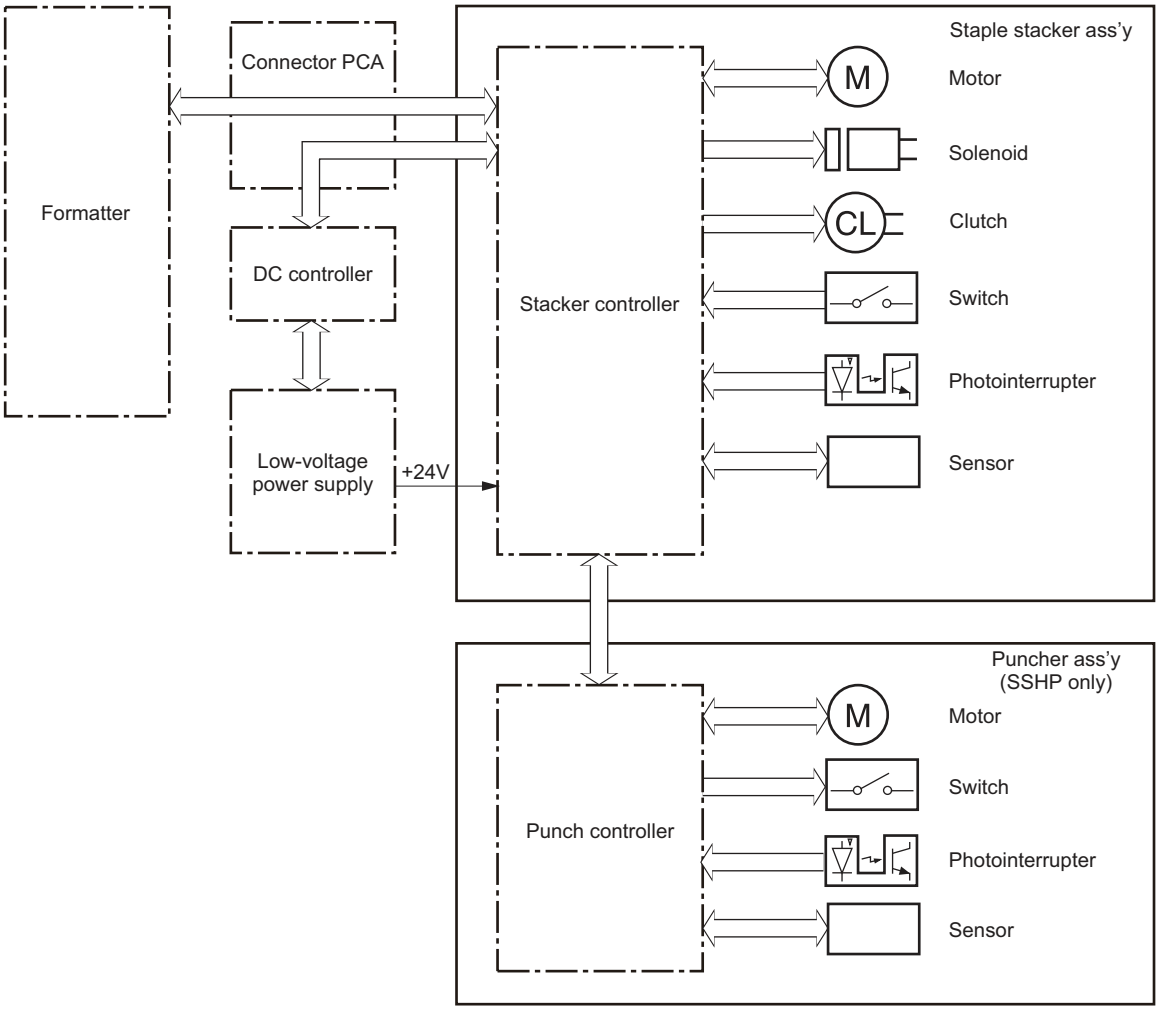

Component type	Abbreviation	Component name
Motor	M1	Switchback motor
	M2	Registration motor
	M61	Hole punch motor (staple/stacker with hole punch only)
	M62	Side registration motor (staple/stacker with hole punch only)
	M63	Hole punch feed motor (staple/stacker with hole punch only)
Solenoid	SL101	Switchback inlet flapper solenoid
	SL102	Switchback alienation solenoid
Switch	MSW61	Top door open detection switch (staple/stacker with hole punch only)
	MSW62	Front door open detection switch (staple/stacker with hole punch only)

Component type	Abbreviation	Component name
Photointerrupter	PI61	Side registration home position sensor (staple/stacker with hole punch only)
	PI62	Hole punch motor clock sensor (staple/stacker with hole punch only)
	PI63	Hole punch home position sensor (staple/stacker with hole punch only)
	PI120	Output bin 2 media-surface sensor 2
	PI123	Swing height sensor
	SR101	Switchback inlet sensor
	SR102	Switchback registration sensor
	SR103	Switchback path jam sensor
	SR104	Product separation sensor
	SR104	Product separation sensor
Sensor PCA	—	LED PCA (staple/stacker with hole punch only)
	—	Photosensor PCA (staple/stacker with hole punch only)
	—	Punch chip box full sensor PCA (staple/stacker with hole punch only)

Stapler/stacker motors

The stapler/stacker has an additional two motors in the switchback assembly. The stapler/stacker with puncher assembly has another additional three motors in the puncher assembly.

Table 1-27 Stapler/stacker motors

Abbreviation	Component name	Component driven
M1	Switchback motor	Switchback roller
M2	Registration motor	Registration roller
M61	Punch motor (staple/stacker with hole punch only)	Hole punch assembly
M62	Side registration motor (staple/stacker with hole punch only)	Hole punch feed roller
M63	Punch feed motor (staple/stacker with hole punch only)	Hole punch slide assembly

Motor failure detection

The stapler/stacker controller does not detect motor failures in the switchback motor (M1) or registration motor (M2).

The stapler/stacker with hole punch controller detects motor failures for the following motors:

- Hole punch motor (M61)
- Side registration motor (M62)

The stapler/stacker with hole punch controller does not detect motor failures for the punch feed motor (M63).

The stacker controller determines a motor failure and notifies the formatter of failure status when it encounters the following condition:

Table 1-28 Stapler/stacker failure detection

Failure detection function	Supported feature
Switchback motor failure detection	No
Registration motor failure detection	No
Hole punch motor failure detection (stapler/stacker with hole punch only)	Yes
Hole punch feed motor failure detection (stapler/stacker with hole punch only)	No
Side registration motor failure detection (stapler/stacker with hole punch only)	Yes

Hole punch motor failure

- The hole punch home position sensor does not detect the home position within a specified period from when the hole punch motor starts drive.
- The hole punch home position sensor keeps detecting the home position for a specified period from when it detects the home position.
- The hole punch home position sensor does not detect the home position again within a specified period from when it once detects the home position.
- The hole punch motor clock sensor does not detect a specified clock pulse within a specified period from when the hole punch home position sensor detects the home position.

Side registration motor failure

- The side registration home position sensor does not detect the punch slide assembly within a specified period from when the side registration motor drives to move the hole punch slide assembly to its home position.
- The side registration home position sensor keeps detecting the hole punch slide assembly for a specified period from when the side registration motor drives to move the hole punch slide assembly away from its home position.

A jam is notified when the switchback motor, registration motor, or hole punch feed motor has failed.

Feed-and-delivery operation

The following figures show the electrical components for the feed-and-delivery operation of the stapler/stacker and the stapler/stacker with hole puncher assembly.

Figure 1-41 Stapler/stacker feed-and-delivery electrical components
<Staple stacker>

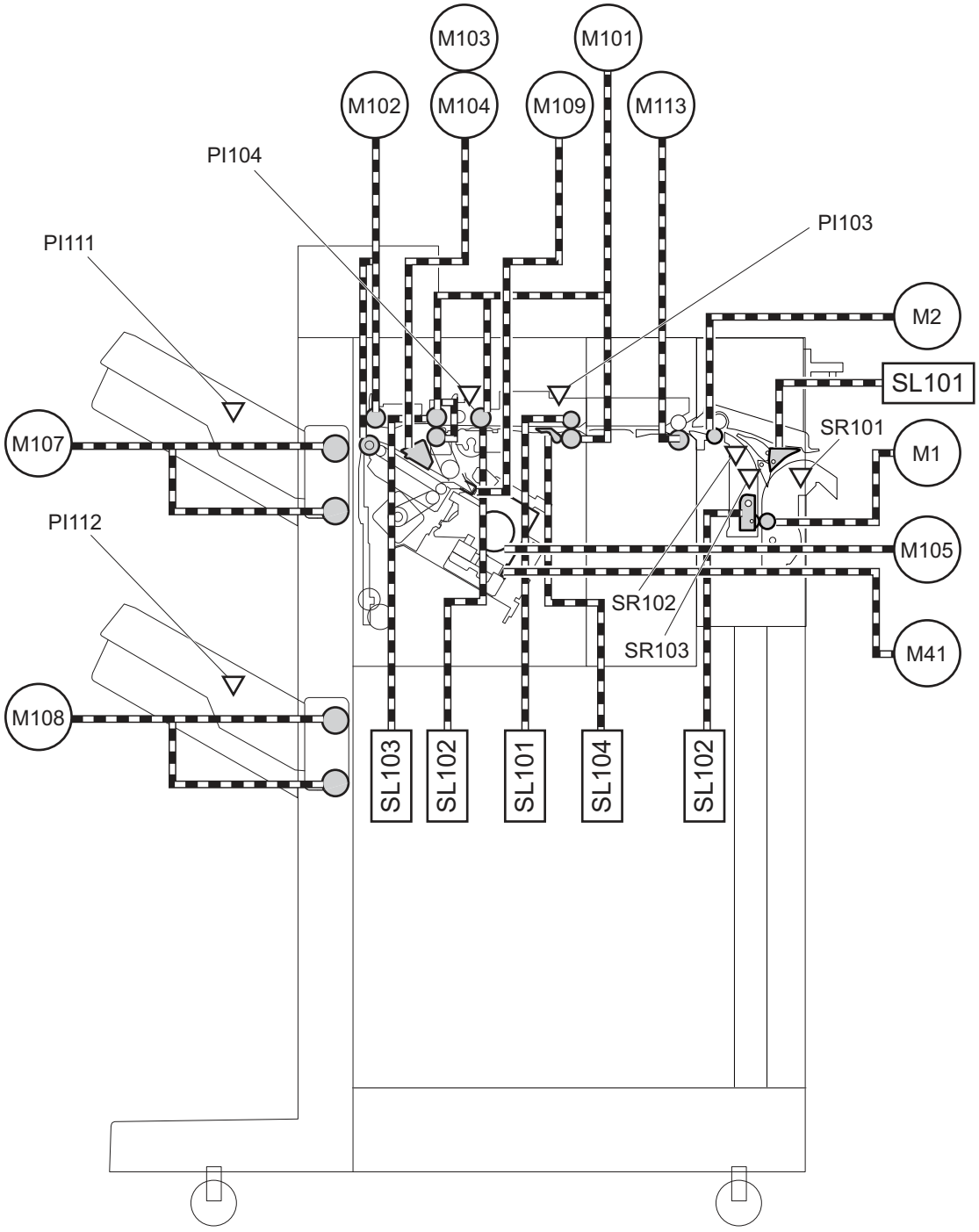

Figure 1-42 Hole punch feed-and-delivery electrical components
<Staple stacker with puncher ass'y>

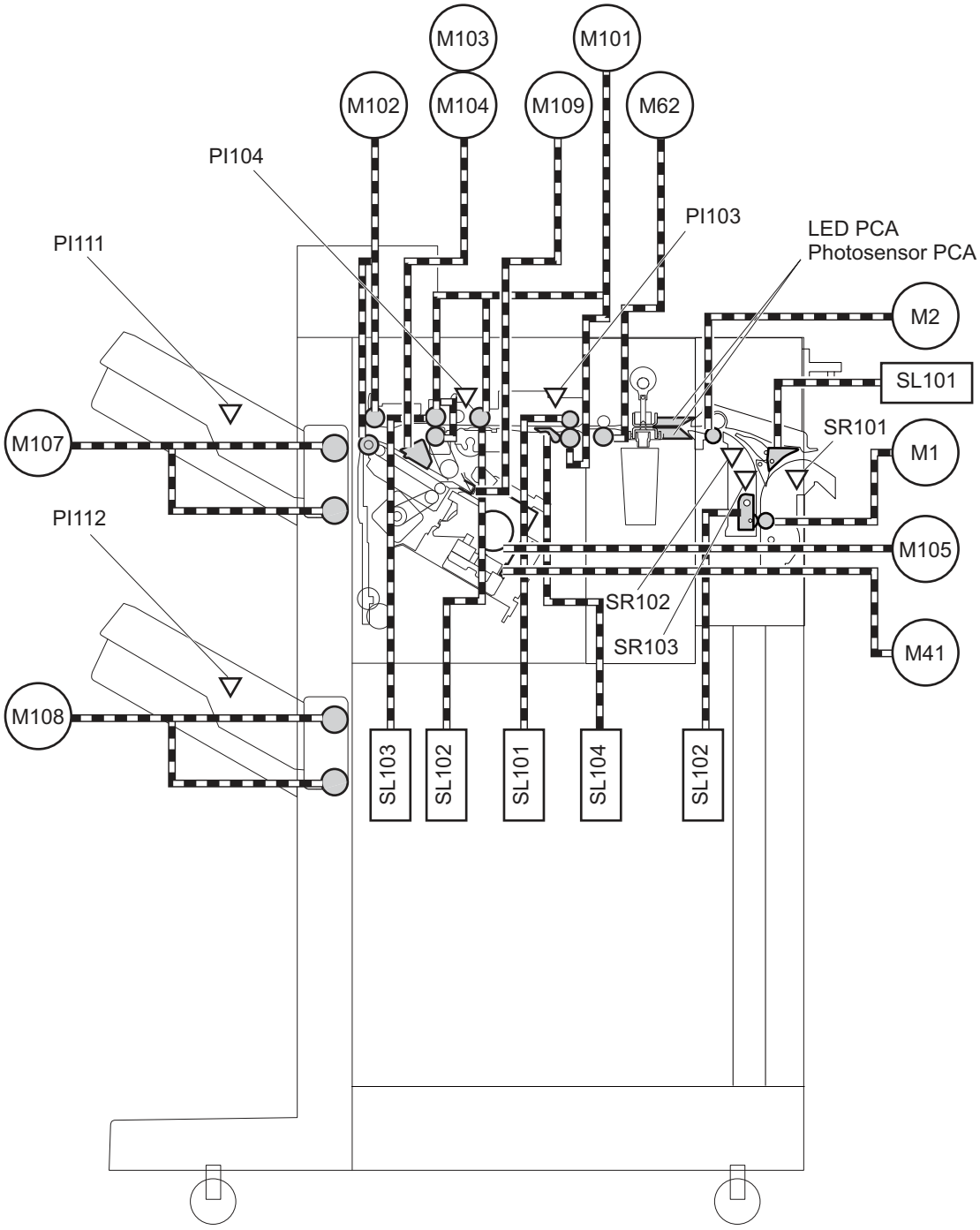

Table 1-29 Feed-and-delivery electrical components

Abbreviation	Component name
M1	Switchback motor
M2	Registration motor
M41	Staple motor

Table 1-29 Feed-and-delivery electrical components (continued)

Abbreviation	Component name
M63	Hole punch feed motor (Stapler/stacker with puncher assembly only)
M101	Inlet motor
M102	Stack ejection motor
M103	Front alignment plate motor
M104	Rear alignment plate motor
M105	Stapler mobility motor
M107	Output bin 1 shift motor
M108	Output bin 2 shift motor
M109	Trailing edge assist motor
M113	Saddle inlet motor
SL101	Switchback inlet flapper solenoid (Solenoids for the switchback assembly)
SL102	Switchback alienation solenoid (Solenoids for the switchback assembly)
SL101	Inlet roller alienation solenoid (Solenoids for the stapler/stacker assembly)
SL102	Buffer roller alienation solenoid (Solenoids for the stapler/stacker assembly)
SL103	Output bin 1 delivery roller alienation solenoid (Solenoids for the stapler/stacker assembly)
SL104	Buffer trailing edge retainer solenoid (Solenoids for the stapler/stacker assembly)
PI103	Inlet sensor
PI104	Paper path sensor
PI111	Output bin 1 media-presence sensor
PI112	Output bin 2 media-presence sensor
SR101	Switchback inlet sensor
SR102	Switchback registration sensor
SR103	Switchback path jam sensor
—	LED PCA (Stapler/stacker with hole puncher assembly only)
—	Photosensor PCA (Stapler/stacker with hole puncher assembly only)

Switchback assembly

The switchback assembly feeds the paper from the product directly or after switching back to the pass-through assembly/hole-puncher assembly.

The switchback assembly has the following three functions:

- Straight feed
- Switchback feed to the pass-through assembly/hole-puncher assembly (without hole punching operation)
- Switchback feed to the hole-puncher assembly (with hole punching operation)

Straight feed

The straight feed function feeds the paper to the pass-through assembly or the hole-puncher assembly without switchback operation.

The operational sequence of the straight feed is as follows:

1. The stacker controller receives the DELIVERY signal from the product.
2. The stacker controller turns on the switchback inlet flapper solenoid to switch the paper path.
3. When the switchback inlet sensor detects the leading edge of the paper, the stacker controller drives the registration motor.
4. The paper is fed to the straight paper path.
5. When the switchback inlet sensor detects the trailing edge of paper, the stacker controller checks if the following paper is fed straight or not.

   If the following paper is fed to the straight paper path, the stacker controller keeps the paper path switched and driving the registration motor.

   -or-

If there is no following paper, the stacker controller stops the registration motor when the trailing edge of paper passes through the registration roller.

Figure 1-43 Straight feed

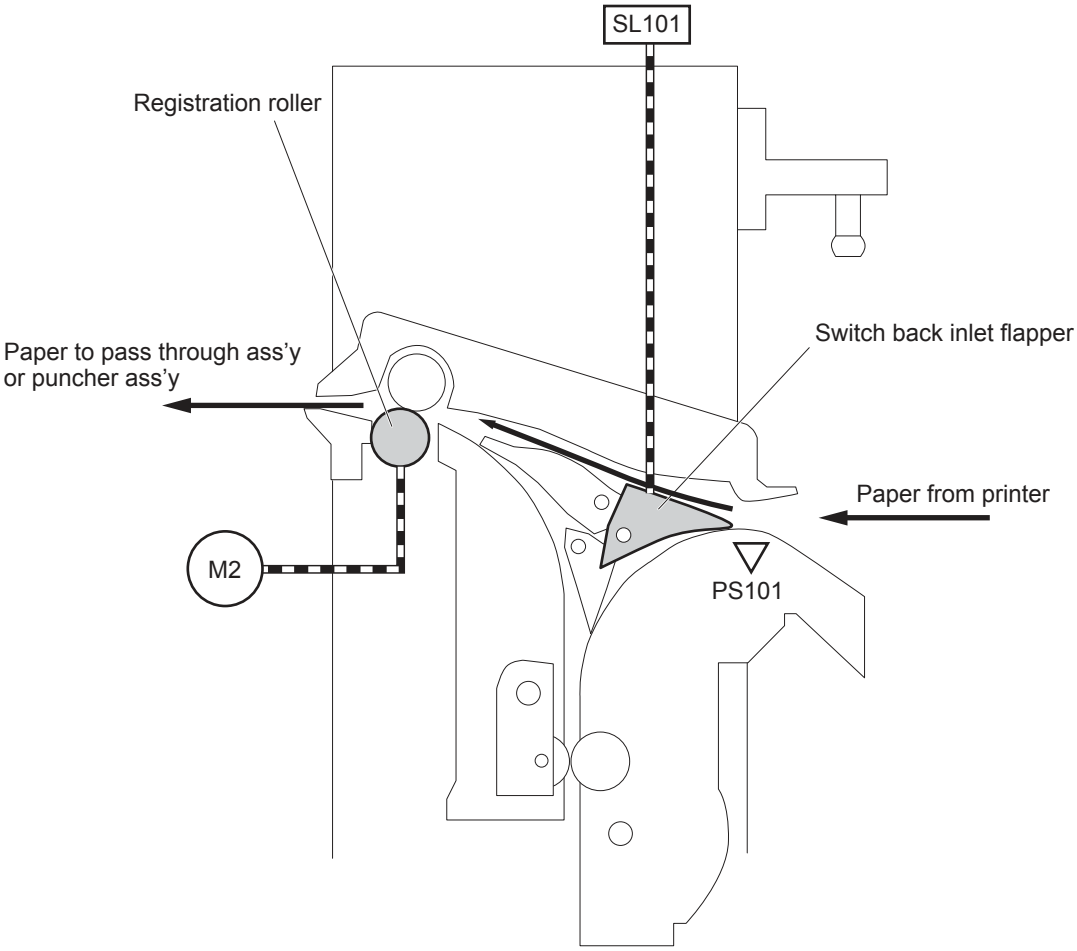

Switchback feed to the pass-through assembly/hole-puncher assembly (without hole punching operation)

The switchback feed to the pass-through assembly/hole-puncher assembly function feeds the paper to the switchback paper path. Then it feeds the switched paper to the pass-through assembly or the hole-puncher assembly.

The operational sequence of the switchback feed to the pass-through assembly/hole-puncher assembly is as follows:

1. The stacker controller receives the DELIVERY signal from the product.
2. When the switchback inlet sensor detects the leading edge of paper, the stacker controller drives the switchback motor.
3. The paper is fed to the switchback paper path.
4. When the trailing edge of paper reaches the switchback feed hold position after the switchback inlet sensor detects the trailing edge, the stacker controller stops the switchback motor.
5. The stacker controller reverses the switchback motor so that the paper is ejected from the switchback paper path.

6. The stacker controller drives the registration motor.

7. When the paper passes the registration roller for a specified length after the switchback registration sensor detects the leading edge, the stacker controller turns on the alienation solenoid so that the switchback counter roller separates from the switchback roller.

8. When the trailing edge of paper passes the switchback paper path, the stacker controller turns off the alienation solenoid so that the switchback counter roller contacts the switchback roller.

9. When the trailing edge of paper passes the registration roller after the switchback registration sensor detects the trailing edge, the stacker controller stops the registration motor.

Figure 1-44 Switchback feed to the pass-through assembly/hole-puncher assembly (without hole punching operation)

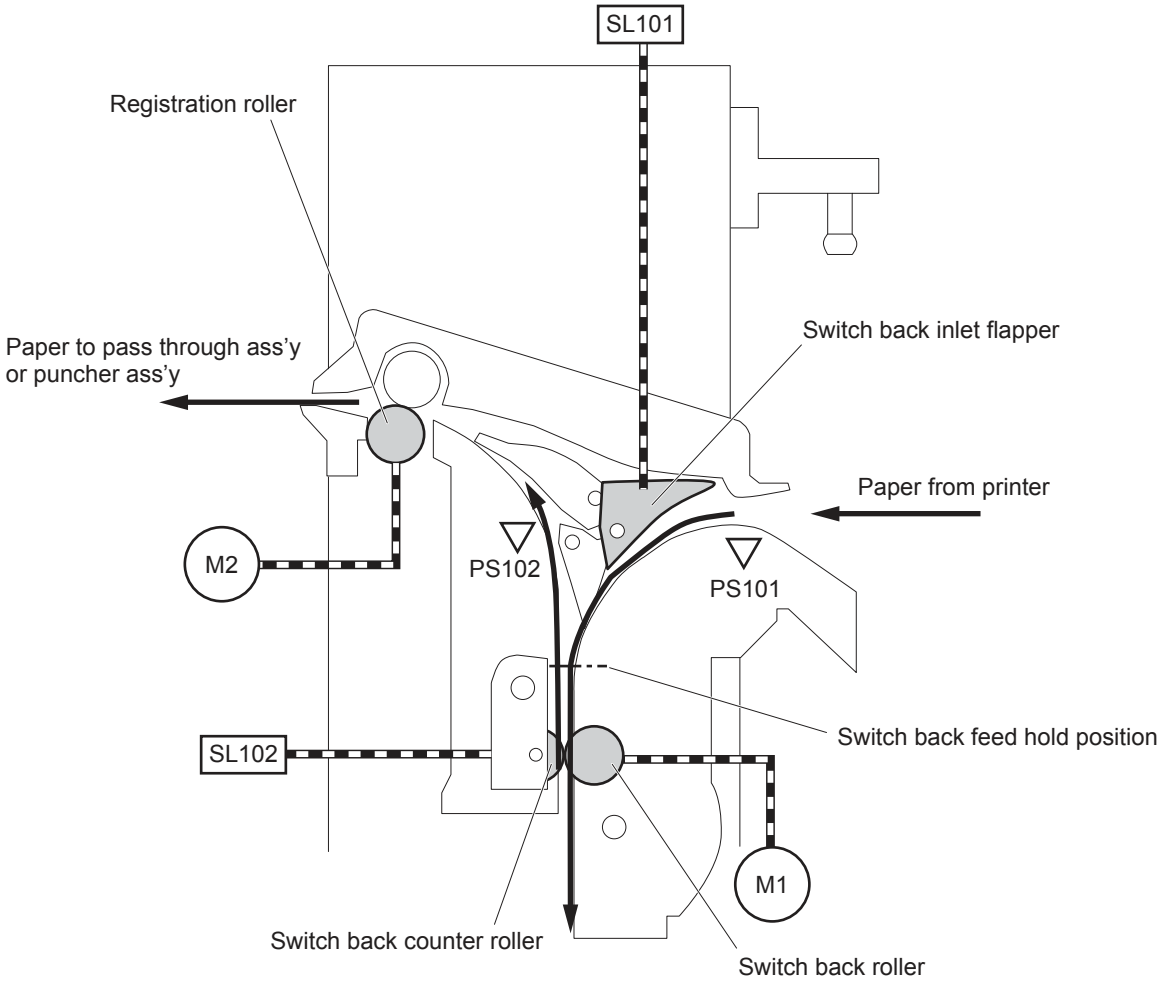

Switchback feed to the hole-puncher assembly (with hole punching operation)

The switchback feed to the hole-puncher assembly function feeds the paper to the switchback paper path. Then it feeds the switched paper to the hole-puncher assembly.

The operational sequence of the switchback feed to the hole-puncher assembly is as follows:

1. The stacker controller receives the DELIVERY signal from the product.

2. When the switchback inlet sensor detects the leading edge of paper, the stacker controller drives the switchback motor.

3. The paper is fed to the switchback paper path.
4. When the trailing edge of paper reaches the switchback feed hold position after the switchback inlet sensor detects the trailing edge, the stacker controller stops the switchback motor.
5. The stacker controller reverses the switchback motor so that the paper is ejected from the switchback paper path.
6. The paper is pressed against the registration roller and fed for a specified length after the switchback registration sensor detects the leading edge.
7. The stacker controller drives the registration motor to correct the skew feed and feed the paper to the hole-puncher assembly.
8. When the paper is fed for a specified length, the stacker controller turns on the alienation solenoid so that the switchback counter roller separates from the switchback roller.
9. When the trailing edge of paper passes the switchback paper path, the stacker controller turns off the alienation solenoid so that the switchback counter roller contacts the switchback roller.
10. When the trailing edge of paper passes the registration roller after the switchback registration sensor detects the trailing edge, the stacker controller stops the registration motor.

Figure 1-45 Switchback feed to the hole-puncher assembly (with hole punching operation)

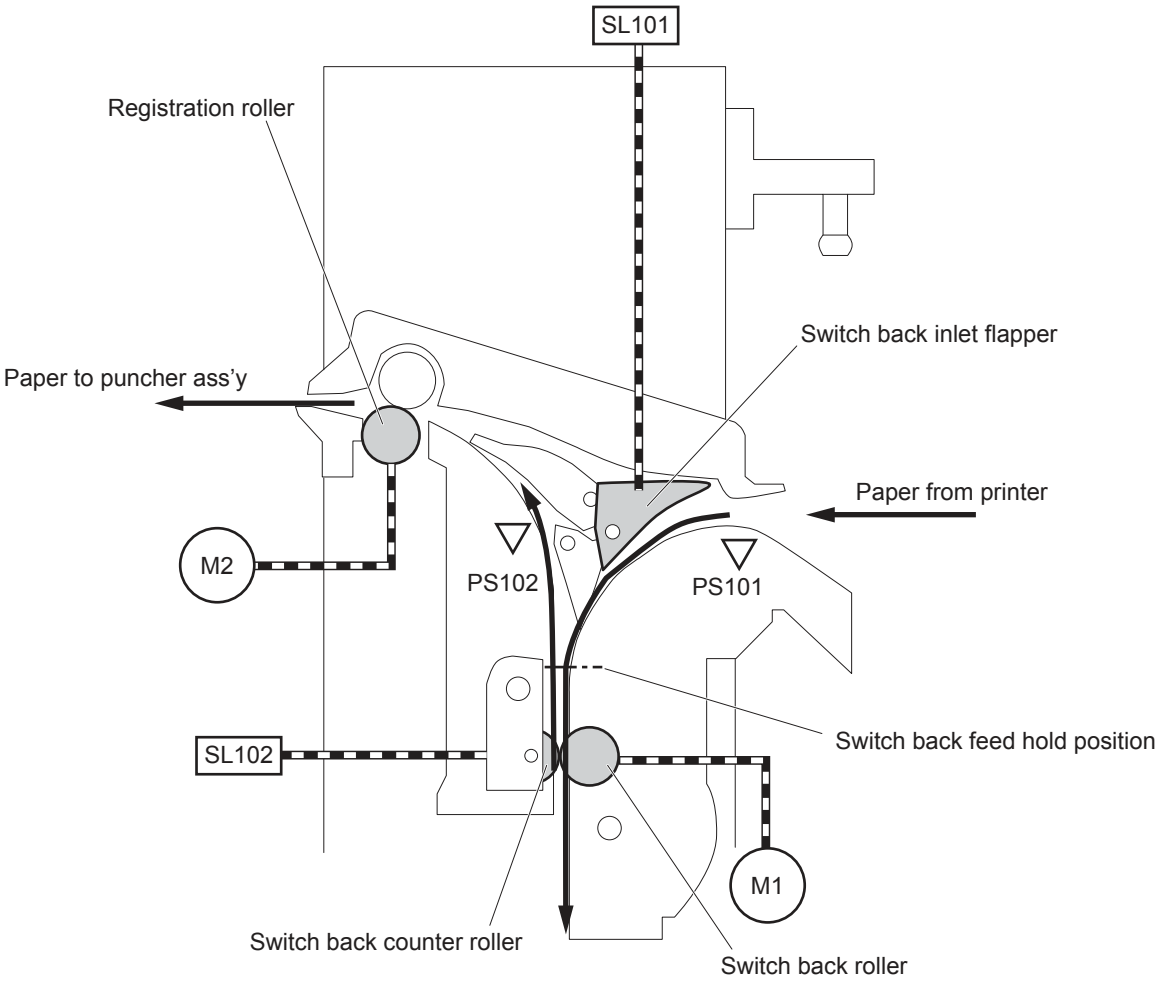

Hole puncher assembly

The staple stacker with hole-puncher assembly has either the 2-hole/3-hole puncher assembly or the 2-hole/4-hole puncher assembly so that it operates two types of punching functions.

The hole-puncher assembly has the following two functions:

- Side registration operation
- Hole punching operation (2-hole/3-hole or 2-hole/4-hole)

Figure 1-46 Hole-puncher assembly

2-hole/3-hole puncher assembly

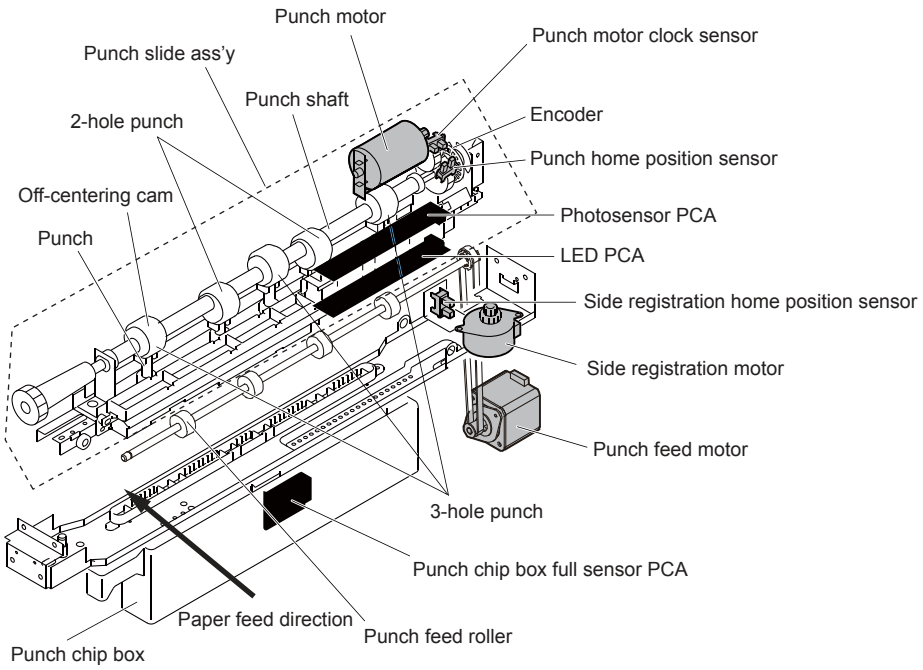

2-hole/4-hole puncher assembly

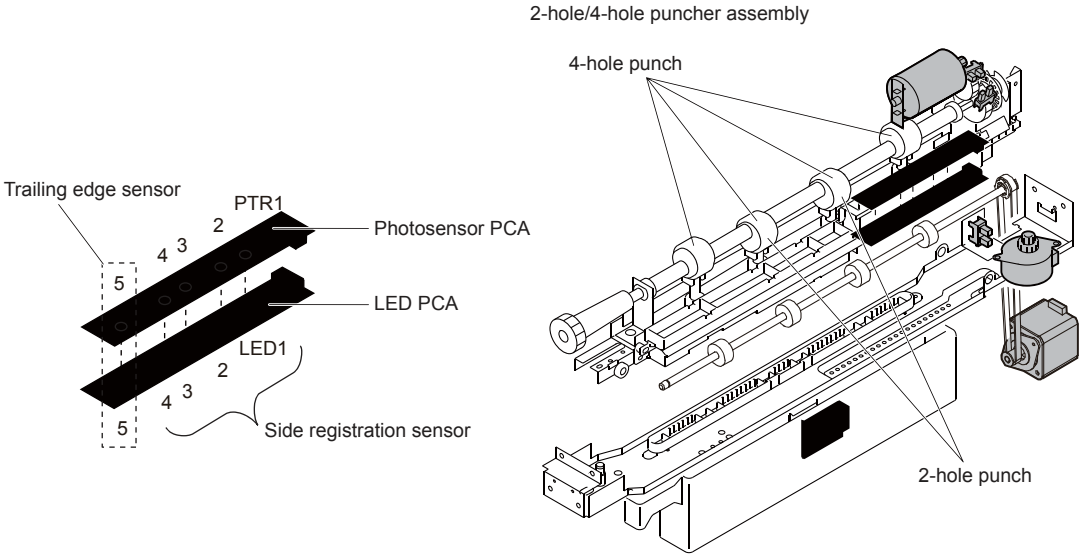

Side registration operation

The side registration operation detects the trailing edge of paper by the side registration sensor and trailing edge sensor, and moves the hole punch slide assembly to the proper punching position according to the paper size.

The side registration sensor and the trailing edge sensor consist of 5 sets of sensors on the paper path of the hole-puncher assembly inlet. The photo sensors are located on the upper side and the LEDs are located on the lower side so that the paper passes through between them.

The operational sequence of the side registration operation is as follows:

1. When the trailing edge sensor detects the leading edge of paper, the hole punch controller drives the side registration motor so that the hole punch slide assembly moves toward the front side of the staple stacker from its home position.

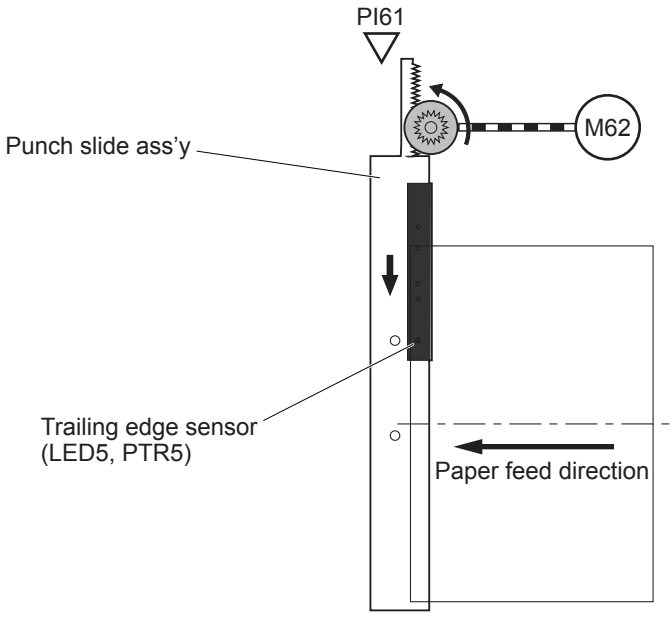

2. The side registration sensor detects the side edge of paper according to the MEDIA SIZE signal sent from the product.

3. The hole punch controller drives the side registration motor so that the hole punch slide assembly moves further toward the front side of the staple stacker to its specified position.

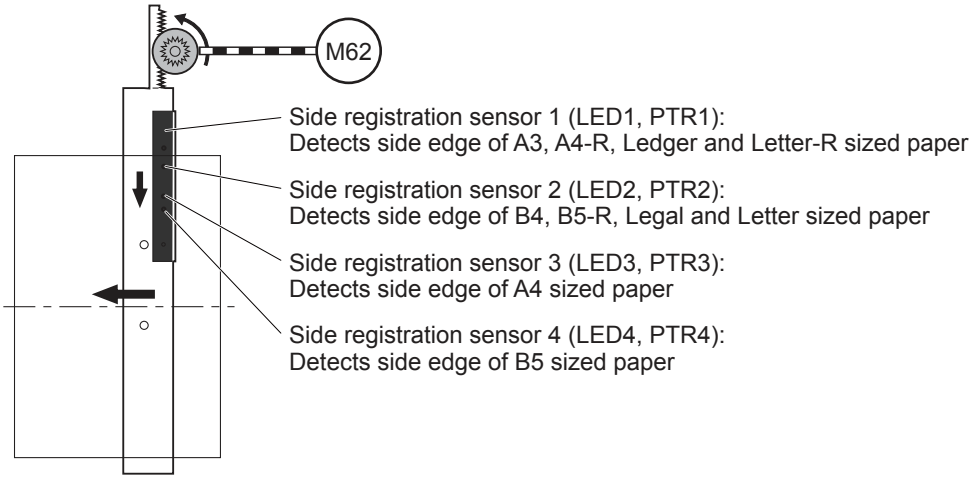

4. When the trailing edge sensor detects the trailing edge of the paper, the hole punch controller stops the hole punch feed motor accordingly and the paper stops.

5. The hole punch controller drives the hole punch motor to punch holes in the paper.

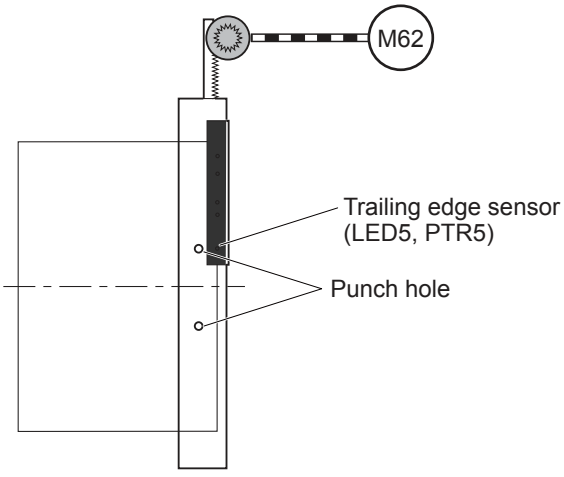

6. When the hole punching operation is completed, the hole punch controller drives the hole punch feed motor and reverses the side registration motor so that the hole punch slide assembly moves back to its home position.

If the following paper requires a hole punching operation, the hole punch slide assembly moves back to its home position every paper and steps 1 to 6 are repeated.

Hole punching operation (2-hole/3-hole puncher assembly)

The 2-hole/3-hole puncher assembly punches 2 holes or 3 holes in the trailing edge of the paper. Five off-centering cams are on the punch shaft: two off-centering cams with punches for 2-hole punching and three off-centering cams with punches for 3-hole punching.

The sensor flag is also on the hole punch shaft. The hole punch home position sensor detects the home position of hole punch shaft. The hole punch home position for 3-hole punching is shifted 180 degrees from the hole punch home position for 2-hole punching. When the hole punch shaft is at the home position, the hole punch home position sensor is turned on. The hole punch motor clock sensor

counts the clock pulse of the hole punch motor by the encoder on the shaft so that the hole punch controller stops the hole punch motor at its home position. Accordingly, the hole punch shaft stops at the home position for either 2-hole punching or 3-hole punching. Hole punching is accomplished by turning the hole punch shaft 180 degrees from its home position. The hole punch chips are collected into the hole punch chip box. The hole punch chip box full sensor detects if the box is filled with hole punch chips.

The operational sequence of the hole punching operation for 2-hole punching in 2 sheets of paper is as follows:

1. The hole punch controller drives the hole punch motor to rotate the hole punch shaft 180 degrees clockwise.
2. The hole punch home position sensor turns on and the hole punching operation in the first sheet is completed.

Punch a hole in the first sheet

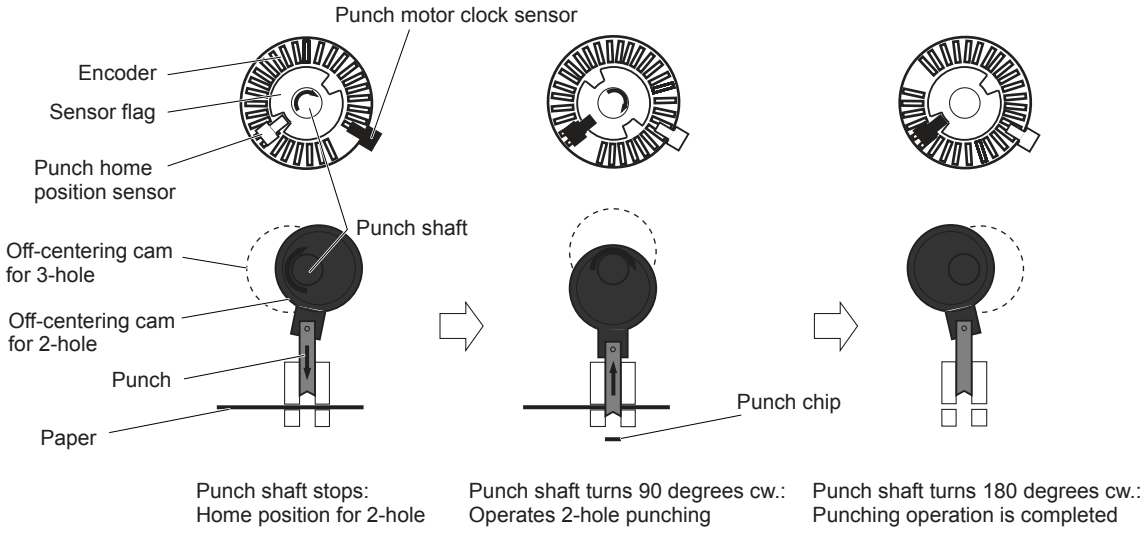

3. The hole punch controller drives the hole punch motor to rotate the hole punch shaft 180 degrees counterclockwise.

4. The hole punch home position sensor turns on and the punching operation in the second sheet is completed.

Punch a hole in the second sheet

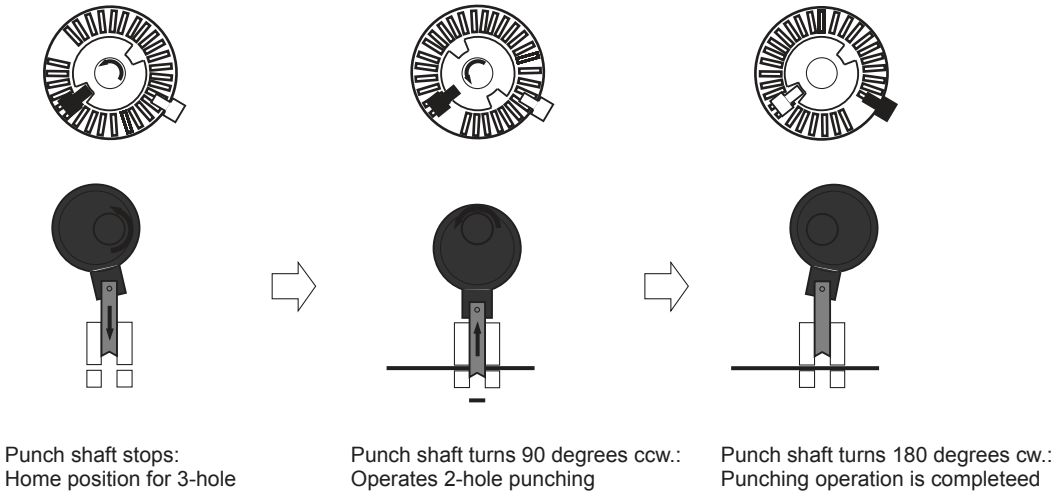

When operating 3-hole punching in 2 sheets of paper, the hole punch shaft for 3-hole punching is rotated 180 degrees counterclockwise from its home position and then for 180 degrees clockwise.

Hole punching operation (2-hole/4-hole puncher assembly)

The 2-hole/4-hole hole-puncher assembly punches 2 holes or 4 holes in the trailing edge of the paper. Four off-centering cams are on the hole punch shaft: two off-centering cams with punches for 2-hole punching and two off-centering cams with punches for outside 4-hole punching. The sensor flag is also on the hole punch shaft, and the hole punch home position sensor detects the home position of the hole punch shaft. When the hole punch shaft is at home position, the hole punch home position sensor is turned on. The hole punch motor clock sensor counts the clock pulse of hole punch motor by the encoder on the shaft so that the hole punch controller stops the hole punch motor at its home position. Accordingly, the hole punch shaft stops the home position for either 2-hole punching or 4-hole punching. A 2-hole punch is operated by turning the hole punch shaft 180 degrees from its home position. A 4-hole punch is operated by turning the hole punch shaft 360 degrees from its home position first to punch the inside 2 holes and then the outside 2 holes. The hole punch chips are collected into the hole punch chip box. The hole punch chip box full sensor detects if the box is filled with punch chips.

The operational sequence of the hole punching operation for 4-hole punching in a sheet of paper is as follows:

1. The hole punch controller drives the hole punch motor to rotate the hole punch shaft 90 degrees clockwise.
2. The inside 2 holes' punching is operated.
3. The hole punch controller drives the hole punch motor to rotate the hole punch shaft 180 degrees clockwise.
4. The hole punch home position sensor turns on and the inside 2 holes' punching operation is completed.
5. The hole punch controller drives the hole punch motor to rotate the punch shaft 270 degrees clockwise.

6. The outside 2 holes' punching is operated.

7. The hole punch controller drives the hole punch motor to rotate the punch shaft 360 degrees clockwise.

8. The hole punch home position sensor turns on and the outside 2 holes' punching operation is completed.

Figure 1-47 Operation of 4-hole punching

Operation of 4-hole punchin>

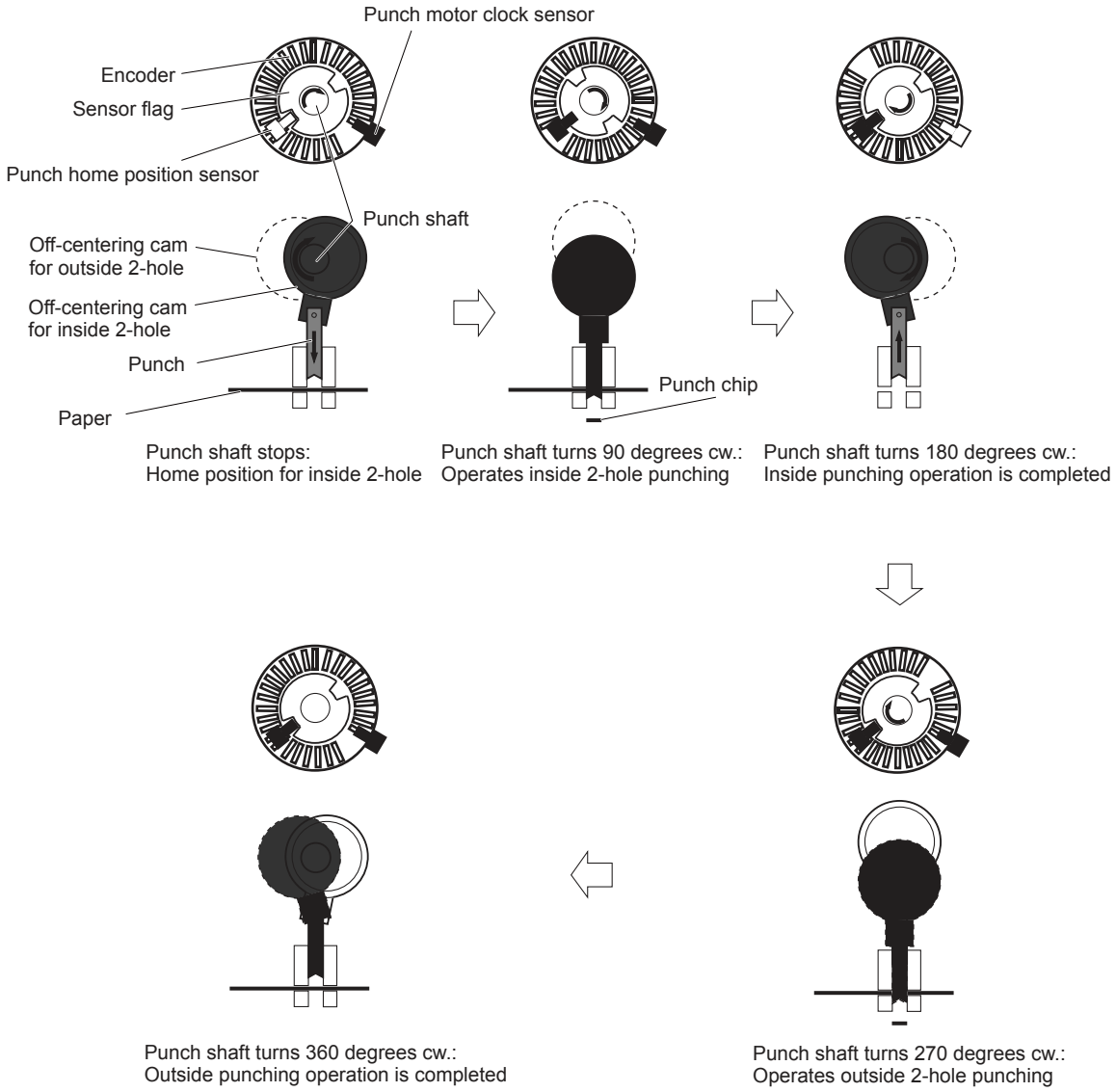

Stapler/stacker assembly

There are two paper paths to output bins 1 and 2.

All sheets are ejected through the following path when the accessory is set to non-sort.

Figure 1-48 Paper path when set to non-sort

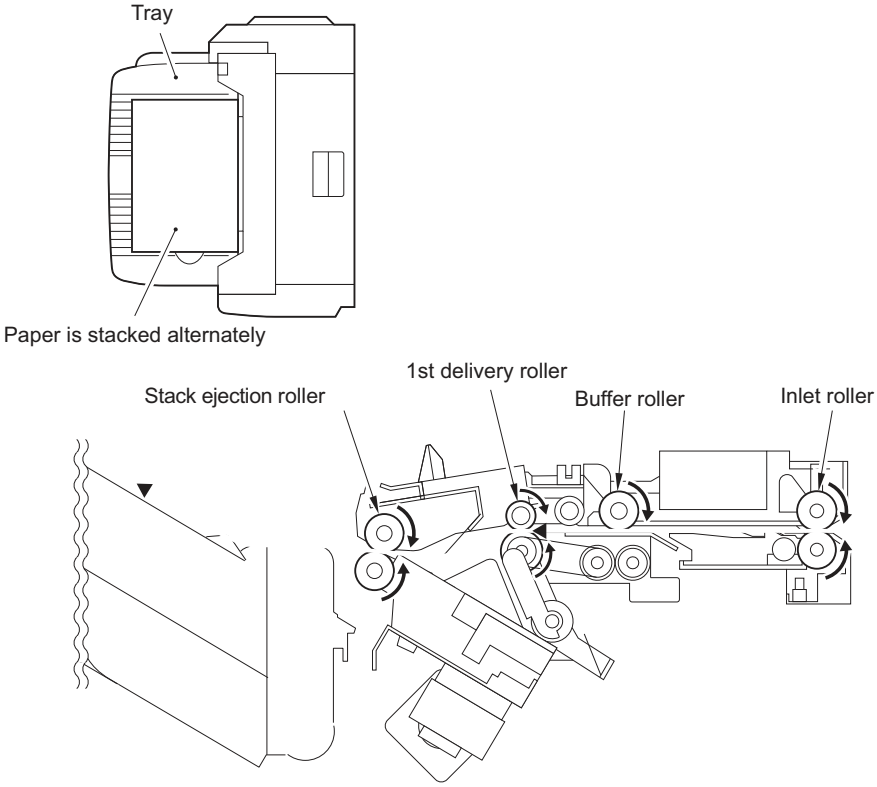

When the product sorts paper size other than A4, B5, or LTR or when set to staple and sort, copies are delivered to the processing output bin for aligning and stapling and then ejected using the stack trailing edge assist.

Figure 1-49 Paper path for sizes other than A4, B5, or LTR

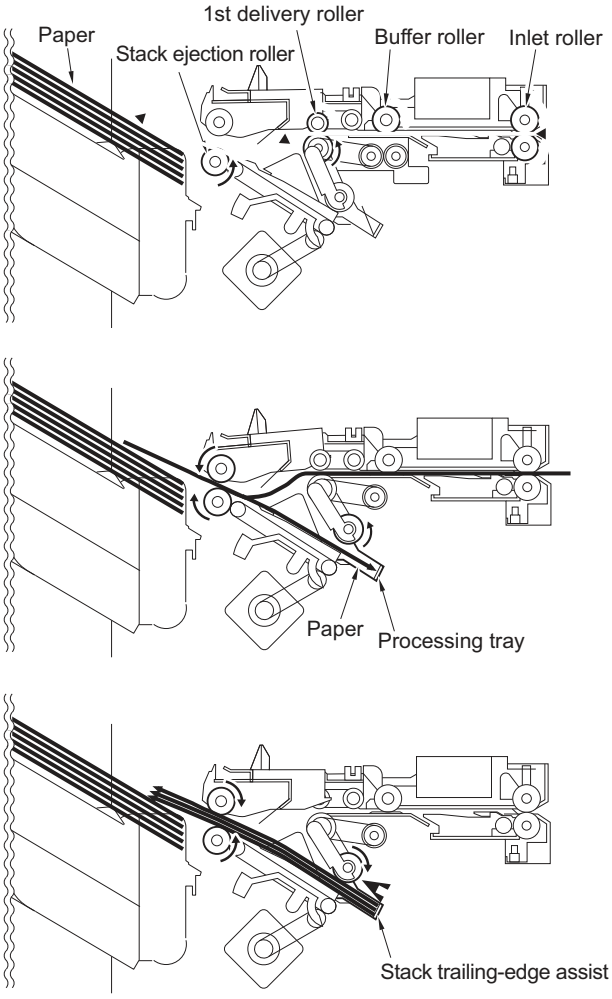

With A4, B5, or LTR paper sizes, two sheets of paper feed into the buffer (two or three sheets if 2-point stapling is activated). The sheets are then aligned and stapled in the processing output bin and ejected. While stapling or offset is performed, copies are simultaneously ejected, delivered to the buffer, and stacked in the processing output bin. Copies are received continuously from the product. The stack delivered from the buffer is ejected to the processing output bin, and the stack processed in the processing output bin is ejected to the output bin.

Simultaneous stack ejection is described below for two A4 copies between stacks when the equipment is set to sort.

1. When the first paper reaches the switchback point, it is sent to the buffer unit, and the buffer guide holds the trailing edge of the paper.

Figure 1-50 Paper path (1 of 5)

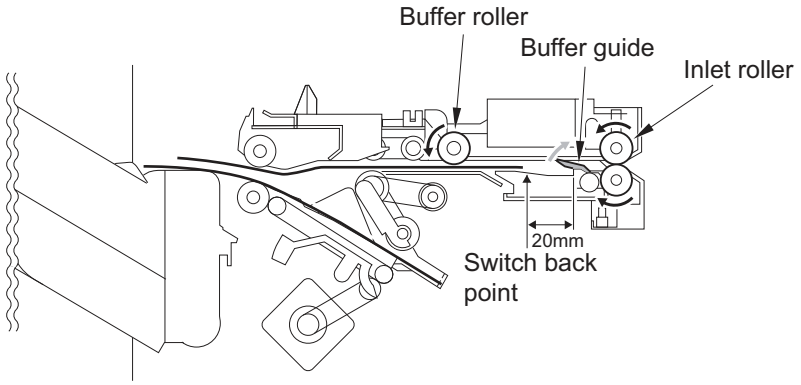

2. When the first sheet arrives at the buffer, the second sheet is sent from the product.

Figure 1-51 Paper path (2 of 5)

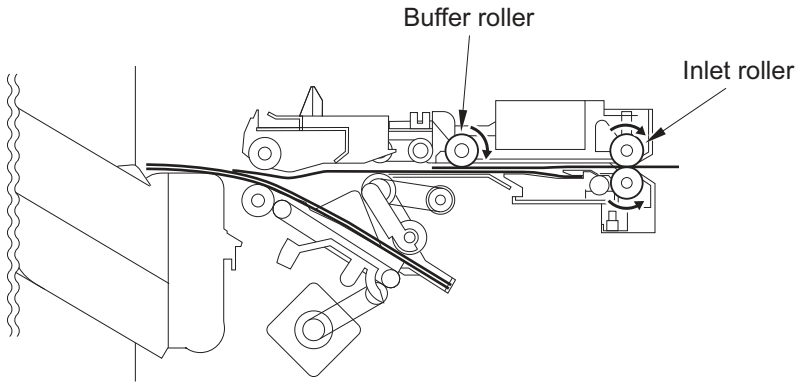

3. The first delivery roller descends and works with the stack-delivery roller to deliver the first and second sheet to the processing output bin. At the same time, the return roller and stack trailing edge assist send the stack in the processing output bin to the output bin.

Figure 1-52 Paper path (3 of 5)

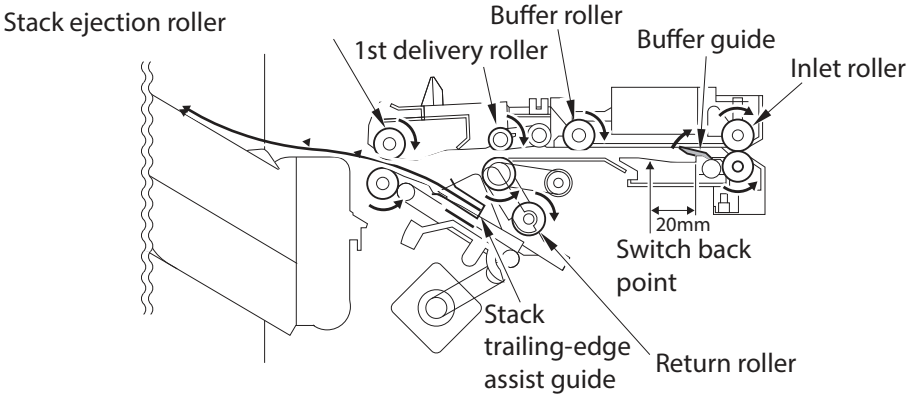

4. When the stack in the processing output bin is sent to the delivery output bin and the trailing edge of the first and second paper exits the first delivery roller, the stack-delivery roller and return roller deliver the first and second sheet to the processing output bin.

Figure 1-53 Paper path (4 of 5)

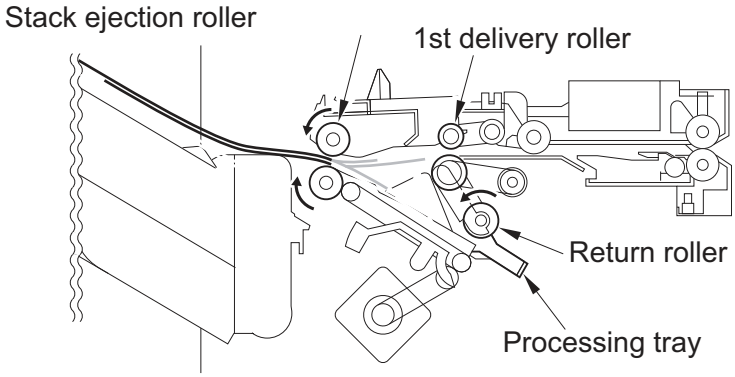

5. The first and second paper delivered to the processing output bin are aligned and then delivered to the output bin.

Figure 1-54 Paper path (5 of 5)

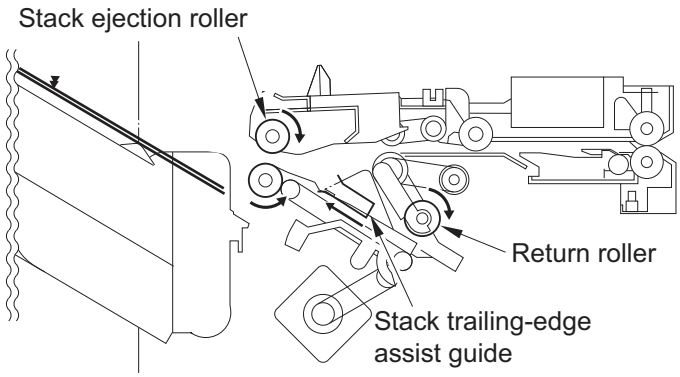

Swing height control

The swing height control maintains the swing assembly at the appropriate position to reduce scratches on the image caused by rubbing the stacked paper on the processing tray with the delivered paper.

Operational sequence of the swing height control is as follows:

1. The printed paper is fed to the processing tray.
2. The paper is stacked on the processing tray and the swing height sensor flag turns off the swing height sensor.
3. The stacker controller drives the swing motor to move up the swing assembly until the swing height sensor is turned on.

Figure 1-55 Stapler/stacker assembly

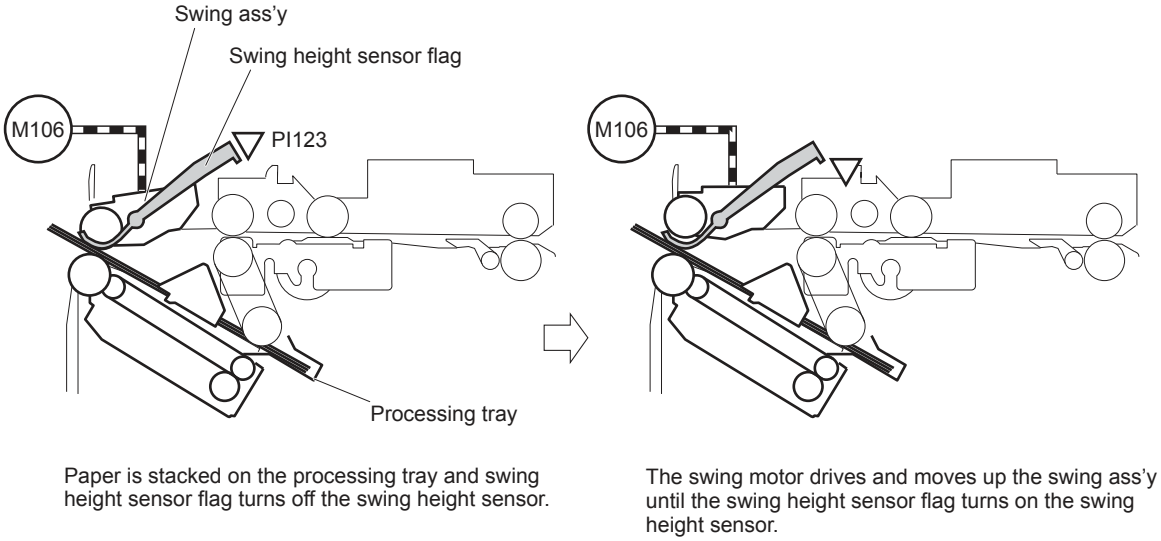

Process output bin paper-stacking operation

When the trailing edge of the paper exits the first delivery roller, the sheet is delivered to the processing output bin by the stack-delivery roller and return roller and then pushed against the processing output bin stopper.

Figure 1-56 Process output bin

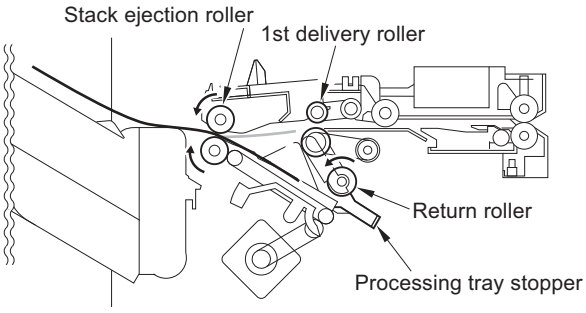

Offset operation

The job-offset operation offsets the paper stack to the front or rear when ejecting to sort the paper stack. The forward/backward movement of the sheet delivered to the processing output bin is controlled by the front-aligning plate and rear-aligning plate. The aligned copies are stapled or ejected according to the signal from the product. When the power is turned on, the stacker controller PCA drives the aligning plate front motor (M103) and aligning-plate rear motor (M104) to return the two

aligning plates to the home position. The name and function of motors and sensors used by the stack job-offset function are shown below.

Figure 1-57 Motors and sensors for stack job offset

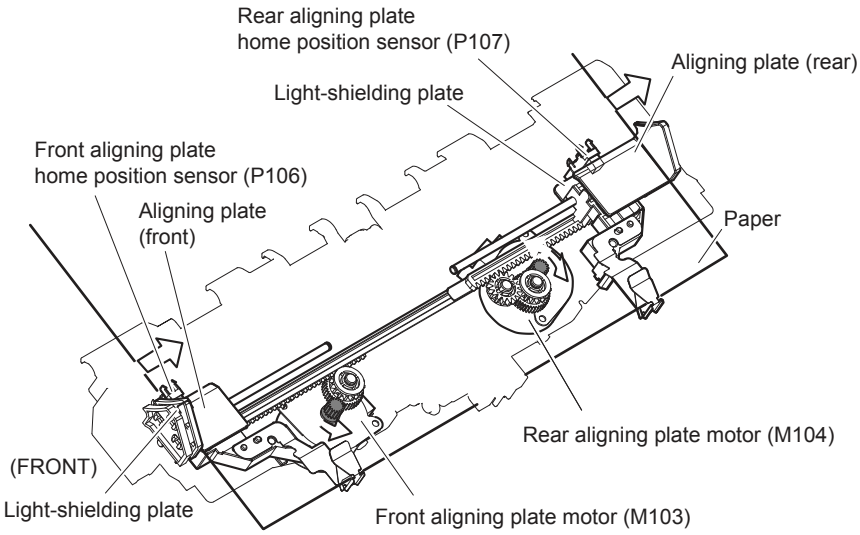

Figure 1-58 Stack job offset example

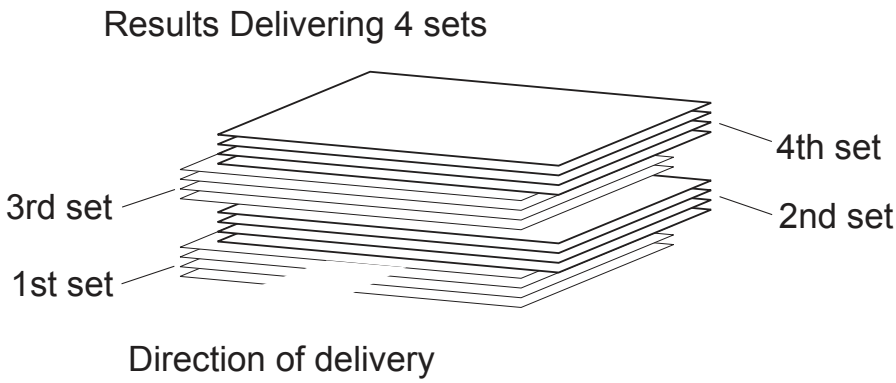

Figure 1-59 Job offset operation (1 of 2)

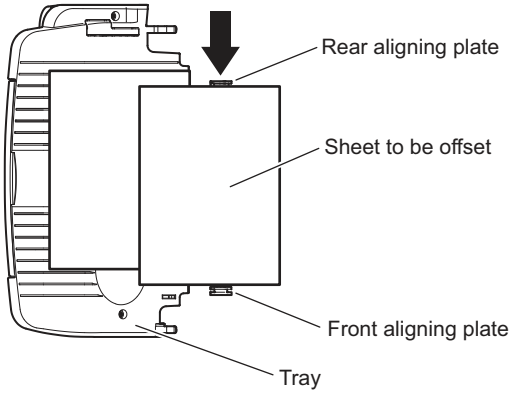

Figure 1-60 Job offset operation (2 of 2)

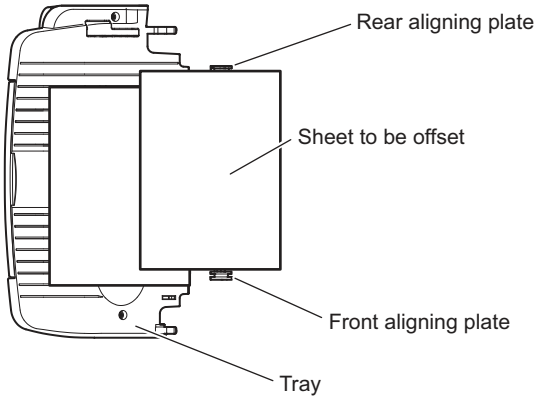

Table 1-30 Motors for the stack job offset

Motor	Function
Front-aligning-plate motor (M103)	Aligns paper in the processing output bin to the front
Rear-aligning-plate motor (M104)	Aligns paper in the processing output bin to the rear
Swing motor (M106)	Moves the swing guide up/down
Stack trailing-edge assist motor (M109)	Carry the stack end during stack ejection

Stack trailing-edge assist operation

To improve stacking performance when ejecting jobs delivered to the processing output bin, a stack trailing-edge assist guide supports the back of the stack during stack ejection.

Figure 1-61 Stack trailing-edge assist operation

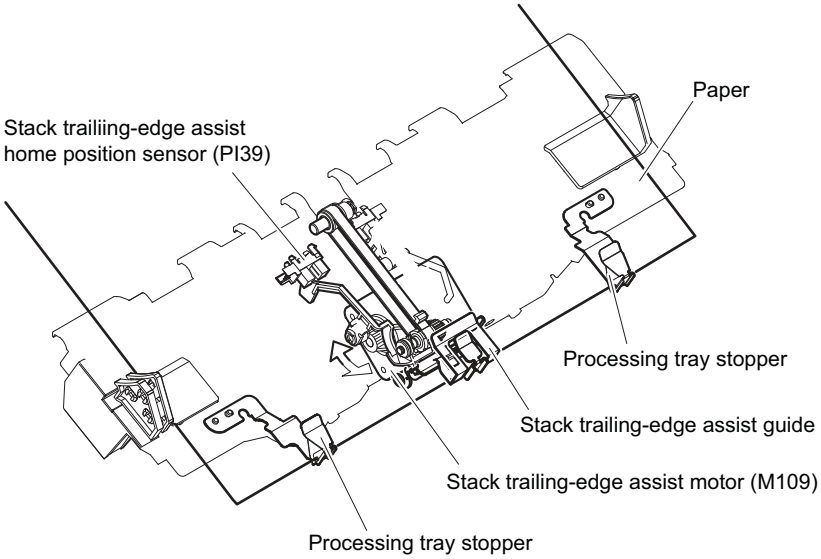

Stack delivery operation

The stack is ejected each time 2-4 large sheets or 2-6 small sheets are offset on the processing output bin. The swing motor turns and the swing guide descends causing the upper and lower stack-delivery rollers to hold the stack. The stack-delivery motor turns the stack-delivery roller and return roller. At the same time, the stack trailing-edge assist motor starts the stack trailing-edge assist guide, and the stack held by the stack-delivery rollers is moved forward. When the stack trailing-edge assist motor reverses, the stack trailing-edge assist guide returns to home position. The stack-delivery motor then ejects the stack with the upper and lower stack-delivery rollers.

Figure 1-62 Stack delivery

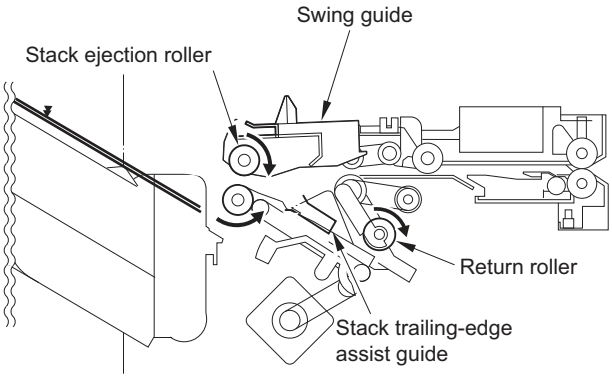

Staple operation

The stapling operation staples the prescribed number of copies with the stapler unit. The staple position depends on the staple mode and paper size. The stapler-shift home-position sensor (PI10) detects whether the stapler unit is at the home position. The stapler unit is equipped with a stapler-alignment interference sensor (P116). The staple motor (M41) operation is prohibited when the stapler-alignment interference sensor (PI46) is on. This prevents stapling at the stopper and

damaging the stopper when the stapler-shift motor (M105) is incorrectly adjusted. When the power is turned on, the stacker controller PCA drives the stapler-shift motor (M105) to return the stapler unit to home position. If the stapler unit is already at home position, it waits in that state.

Figure 1-63 Stapler unit

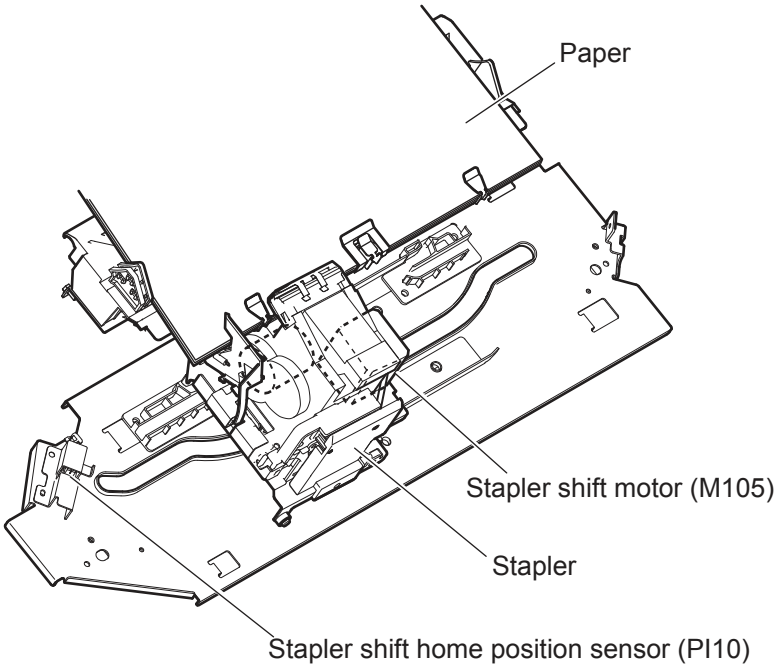

Figure 1-64 Staple location

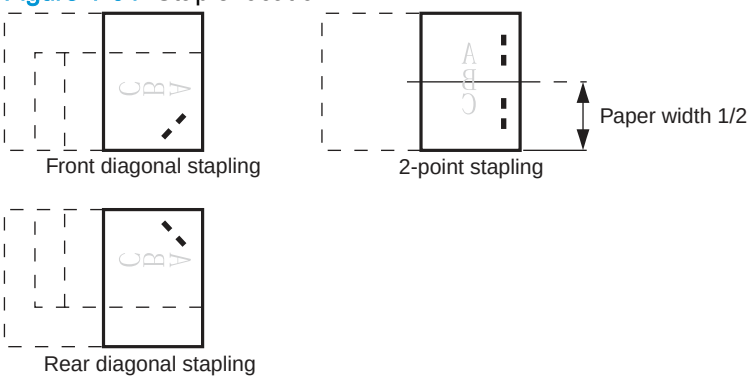

Table 1-31 Sensors used in stapling

Abbreviation	Sensor	Connector	Function	Remarks
PI10	Stapler-shift home position sensor	J6B-7	Detects the home position for the stapler moving back and forth	
PI16	Stapler-alignment interference sensor	J5-3	Staple prohibited area detection	
N/A	Stapler home-position sensor	J5-5	Detects the home position for the stapling operation	In the stapler
N/A	Staple edging sensor	J5-6	Detects the staple top position	In the stapler
N/A	Staple sensor	J5-7	Detects presence or absence of staples in the cartridge	In the stapler

Table 1-32 Motors used in stapling

Abbreviation	Component name	Function
M105	Stapler-shift motor	Moves the stapler
M41	Staple motor	Performs the stapling operation

The stacker controller PCA moves the stapler according to the specified stapling position. When the rear of the first sheet passes the first delivery roller, the stacker controller PCA stops the stack-delivery motor (M102) and then rotates it in reverse. The stack-delivery motor rotates the stack-delivery roller and return roller and delivers the paper to the processing output bin. The paper in the processing output bin is detected by the processing-output-bin paper sensor (PI08). When the paper is delivered to the processing output bin, the swing motor (M106) starts and raises the swing guide. When the swing-guide home-position sensor (PI05) detects the rising of the swing guide, the swing-guide motor stops and holds the swing guide at the raised position. After the processing-output-bin paper sensor detects the paper, the aligning motor (M103/M104) starts and aligns the paper.

Figure 1-65 Paper path for stapling

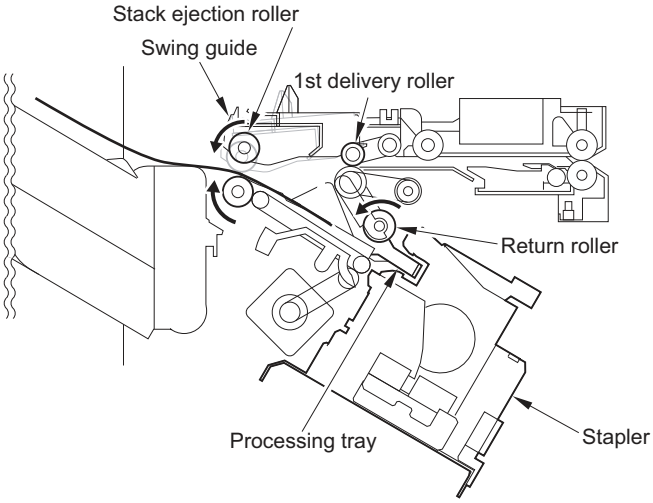

Figure 1-66 Rollers and sensors for stapling

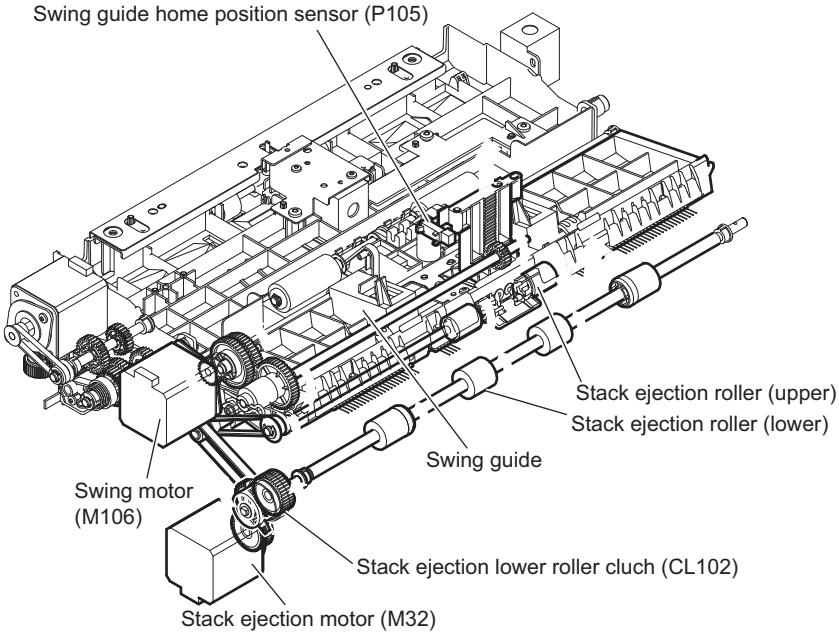

The stacker controller PCA starts the swing motor (M106) and lowers the swing guide when the rear of the second paper passes the first delivery roller. The stack-delivery motor is reversed. The stack-delivery motor rotates the stack-delivery roller (upper) and return roller and sends the paper to the processing output bin. At this point, the stack-delivery roller (lower) does not rotate because the stack-ejection lower roller clutch (CL102) is disengaged. The output-bin paper sensor (PI08) detects the processing-output bin paper sensor (P108). When the paper is delivered to the processing output bin, the swing motor (M106) starts and raises the swing guide. When the swing-guide home-position sensor (PI105) detects the rising of the swing guide, the swing-guide motor stops and holds the swing guide at the raised position. After the processing-output-bin paper sensor detects the paper, the aligning motor (M103/M104) starts and aligns the paper.

Figure 1-67 Staple paper path

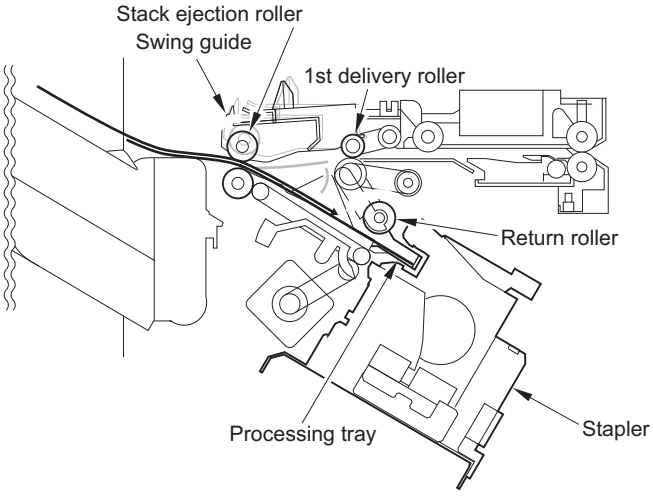

When the last sheet is aligned, the stacker controller PCA moves the aligning plate to the alignment position with the aligning motor (M103/M104) (the paper is held by the aligning plate). Then the stacker controller PCA staples at the specified staple position. After stapling, the stacker controller PCA starts the swing motor (M106) and lowers the swing guide. Then the stack is ejected by the stack-delivery roller, return roller, and stack trailing-edge assist guide.

Figure 1-68 Shift process for the staple unit

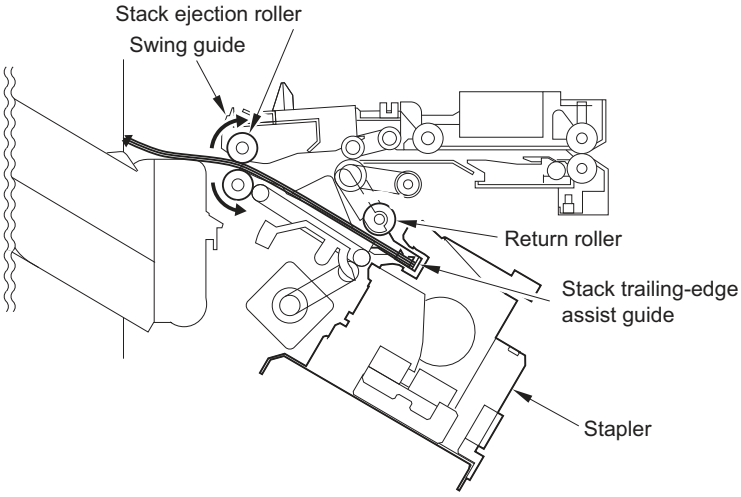

The stapler motor (M41) rotates the cam one turn for stapling. The stapler home-position sensor (PI50) detects the home position of the cam. The macro computer (IC13) on the stacker controller PCA controls the forward and reverse rotation of the staple motor. When the stapler home-position sensor is off, the stacker controller PCA rotates the stapler motor in the forward direction until the sensor turns on, allowing the staple cam to return to the original position. The staple sensor (PI52) is used to detect the presence or absence of a staple cartridge in the machine and the presence or absence of staples in the cartridge. The staple edging sensor (PI51) determines whether staples are pushed up to the top of the staple cartridge. For safety, the stacker controller circuit does not drive the staple motor (M41) unless the staple safety switch (MSW103) is on.

Figure 1-69 Stapling operation (1 of 2)

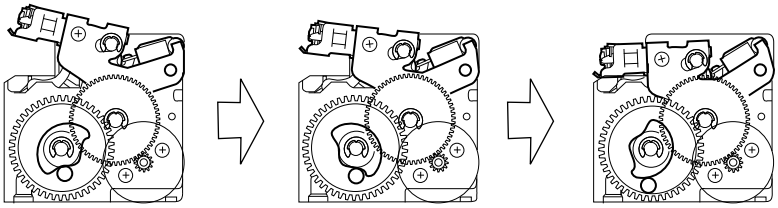

Figure 1-70 Stapling operation (2 of 2)

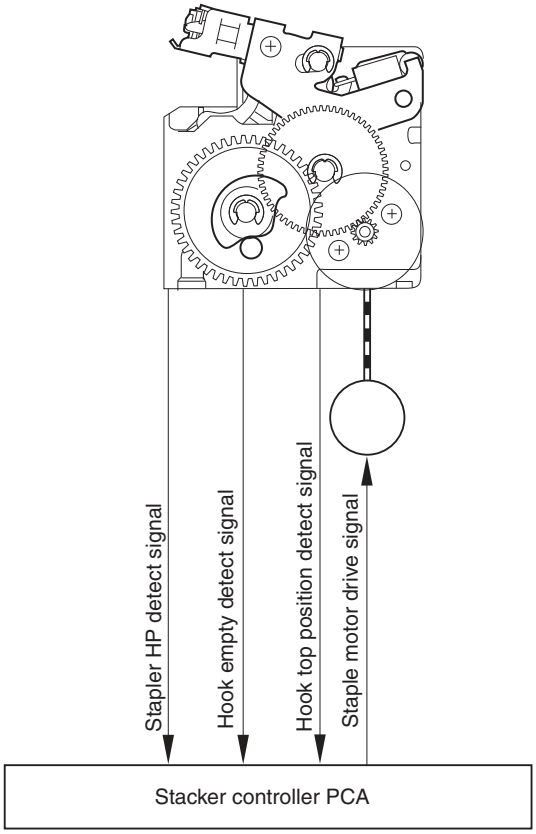

Shift the staple unit

The stapler-shift motor (M105) shifts the stapler unit. The stapler-shift home-position sensor (PI10) detects the home position. When there is a staple command from the product, the stapler shifts to the staple ready position, which depends on the stapling position and paper size. The stapler unit waits at the following points when staple mode is selected.

Figure 1-71 Front 1-point stapling

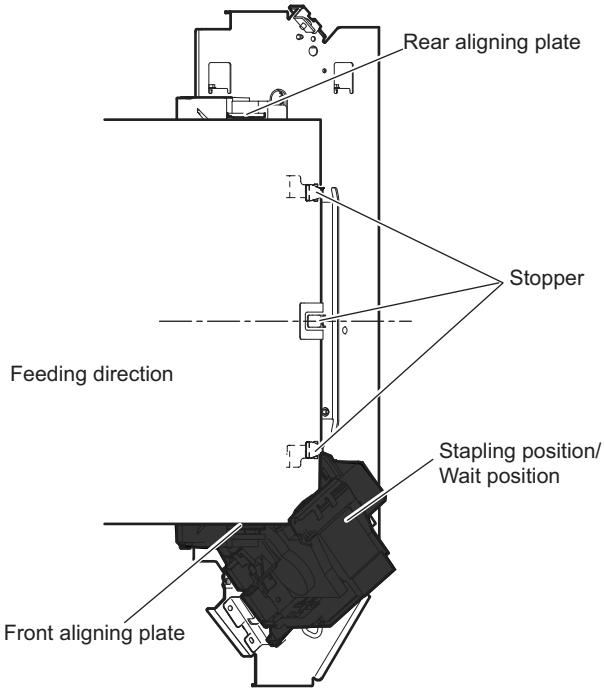

Figure 1-72 Rear 1-point stapling

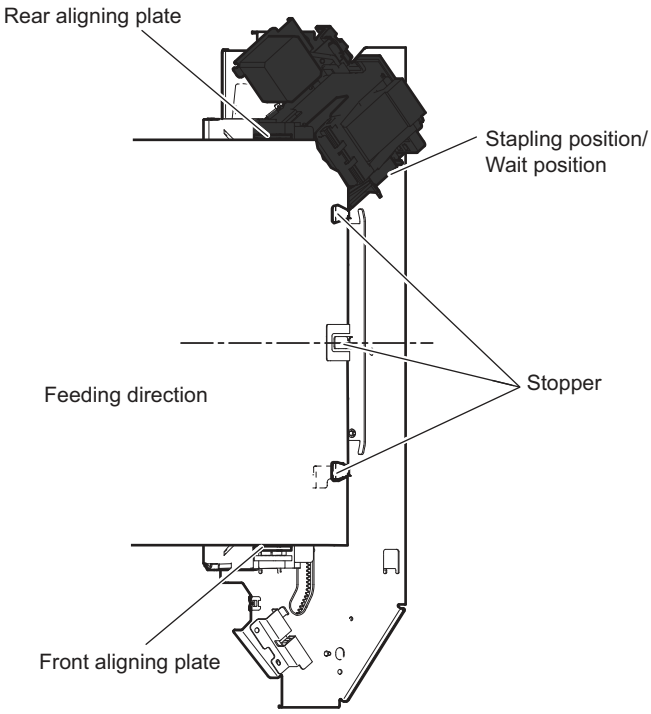

Figure 1-73 2-point stapling

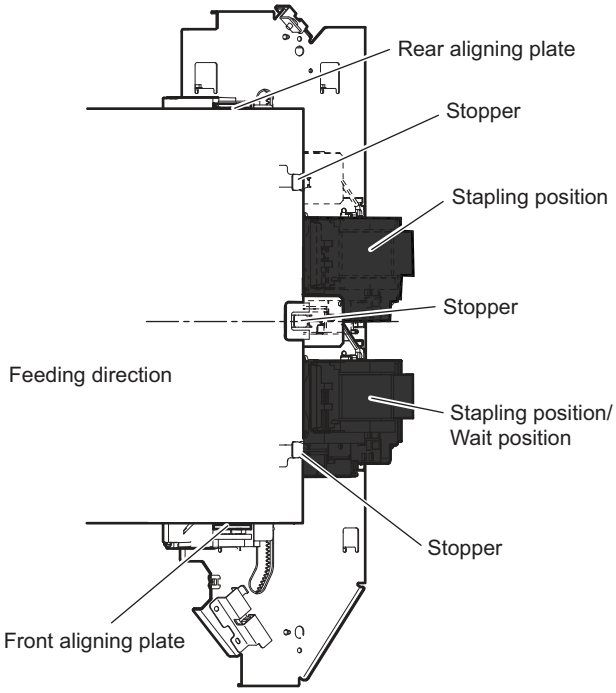

Stack operation (stapler/stacker and booklet maker)

Output bin operation

This accessory has an upper output bin (output-bin 1) and a lower output bin (output-bin 2).

- The output-bin-1-shift motor (M107) and output-bin-2-shift motor (M38) move output-bin 1 and output-bin 2 up and down independently.
- The output-bin-1 paper sensor (PI111) and output-bin-2 paper sensor (PI112) detect paper stacked on the output bin.
- The output-bin-1 paper-surface sensor (PI41) and output-bin-2 paper-surface sensor (PI48) detect the home positions of output-bin 1 and output-bin 2.
- The home position is the top surface of the paper when paper is stacked on the output bin, or the position where the edge of the output bin is detected when no paper is stacked.
- When the power is turned on, the stacker controller PCA drives the output-bin-1-shift motor (M107) and output-bin-2-shift motor (M108) to return the output bin to home position. If already at home position, the output bin is moved from the home position and then returned. If both output bins are at home position, this is performed for output-bin 1 and then for output-bin 2.
- If the product specifies output-bin 2, the stacker controller PCA shifts the output bin so that output bin 2 is at the delivery port. When paper is stacked on the output bin, a prescribed number of pulses drive the output-bin-1-shift motor (M107) or output-bin-2-shift motor (M108) to lower the output bin. Then the output bin returns to home position to prepare for the next stack.
- The upper and lower limits of the output bin are detected by six area sensors (PS981, PS982, PS983, PS984, PS985, and PS986) on the output-bin-1- and output-bin-2-shift area sensor PCA.
- If the area sensor PCA detects the upper or lower limit of the output bin, it stops driving the output-bin-1-shift motor (M107) and output-bin-2-shift motor (M108). Also, the on/off

combinations of the area sensors (PS981, PS982, PS983, PS984, PS985, and PS986) are used to detect over-stacking according to the stack height for large-size and mixed stacking.

- The stacker controller PCA stops supplying +24 V to the output-bin-1-shift motor (M107) and stops the stacker operation when the output-bin-1 switch (MSW103) turns on.

Figure 1-74 Items detected by the area sensors)

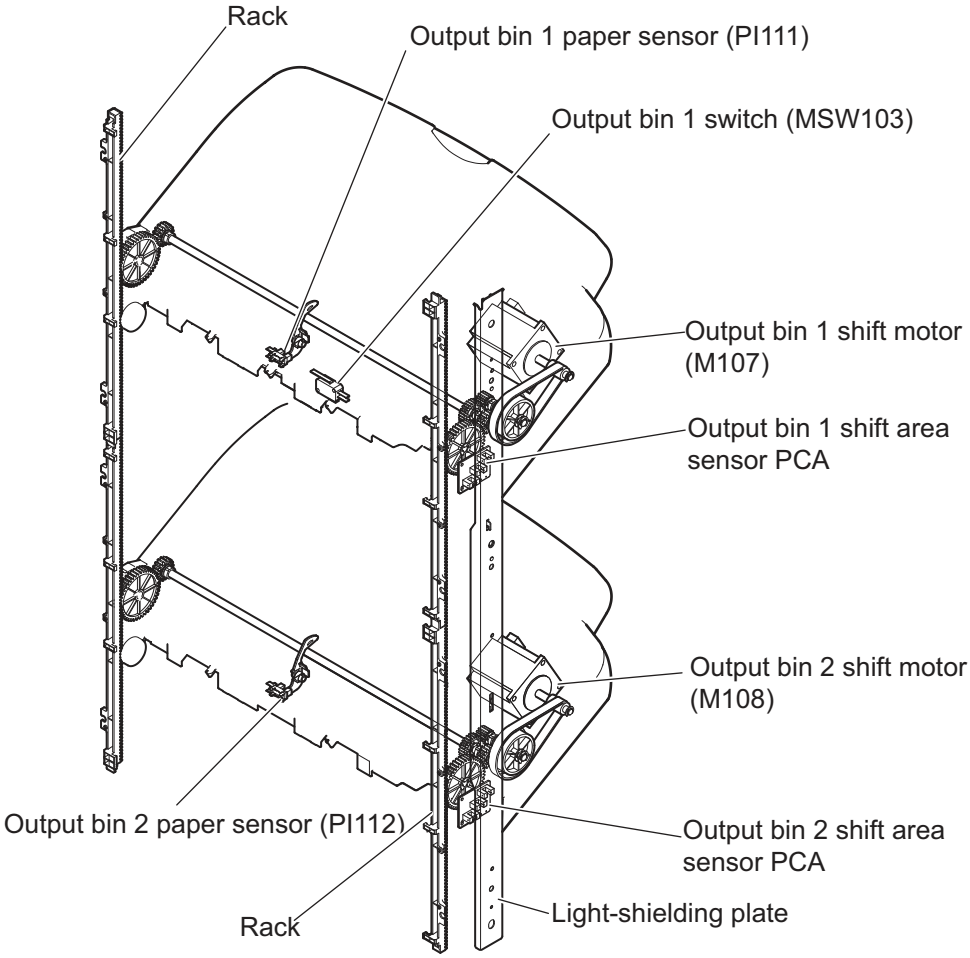

NOTE: PI111 is located on output-bin 1. PI112 is located on output-bin 2.

Figure 1-75 Output-bin components

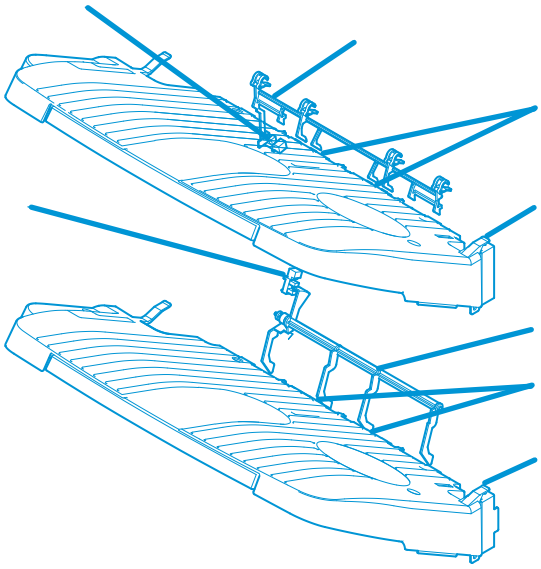

Table 1-33 Output-bin-1-shift area sensor PCA

Detected items	Area sensor 3 (PS983)	Area sensor 2 (PS982)	Area sensor 1 (PS981)
Output-bin-1 upper limit	On	Off	Off
Stack-count 650-sheet limit exceeded	On	On	On
Stack-count 1,300-sheet limit exceeded	Off	On	On
Output-bin-1 lower limit	Off	Off	On

Table 1-34 Output-bin-2-shift area sensor PCA

Detected items	Area sensor 3 (PS986)	Area sensor 2 (PS985)	Area sensor 1 (PS984)
Output-bin-2 upper limit	On	Off	On
Stack-count 650-sheet limit exceeded	On	On	On
Stack-count 1,300-sheet limit exceeded	Off	On	On
Stack-count 1,700-sheet limit exceeded	Off	Off	On
Output-bin-2 lower limit	Off	On	Off

Shutter operation

To prevent the delivery section from catching stacked paper in output-bin 1 when it passes, a shutter is provided at the delivery section. The shutter closes when output-bin 1 passes, even when no paper is stacked. When the shutter clutch (CL101) and stack-ejection lower-roller clutch (CL102) are on, the shutter moves up (closes) when the stack-ejection motor (M102) turns forward and moves down (open, delivery enabled), which occurs when the motor turns backward. The shutter home-position sensor (PI15) detects the opening and closing of the shutter.

Figure 1-76 Shutter location

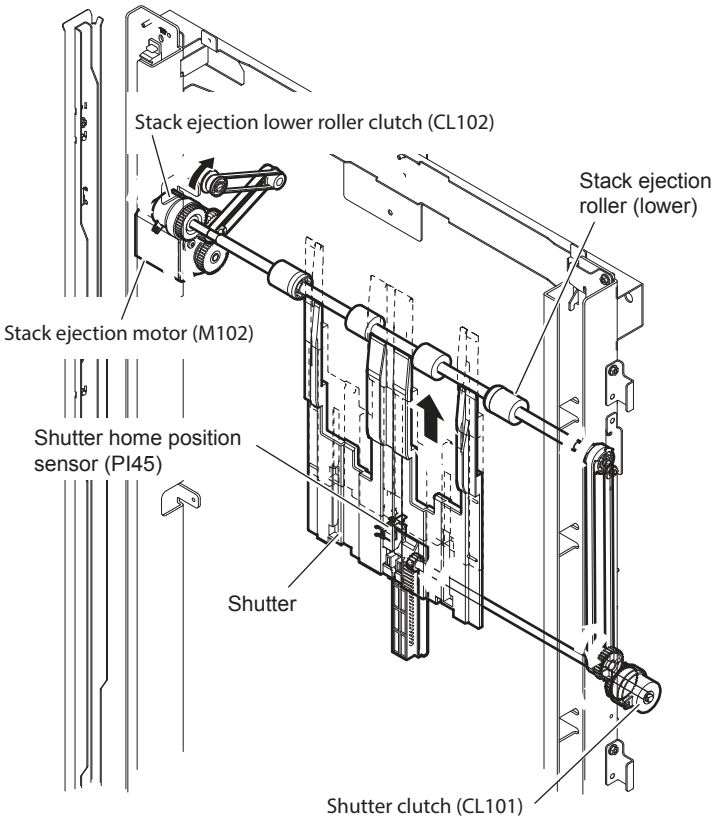

Jam detection

Stapler/stacker jam detection

The following sensors detect paper and determine whether paper is delivered properly:

- Stacking paper-path-entry sensor (PI103)
- Stacking paper-path-delivery sensor (PI104)

A jam is identified by checking whether paper is present at each sensor at the timing programmed in the memory of the microcomputer (CPU) on the stacker controller PCA. When the CPU identifies a jam, it suspends the stacker's delivery operation and informs the product of the jam. When all doors are closed after the paper jam is removed, the stacker use the two sensors (stacking paper-path-entry sensor and stacking paper-path-delivery sensor) to check for further jams. If the sensors detect

paper, the stacker determines that the paper jam has not been removed and sends another jam removal signal to the product.

Figure 1-77 Jam detection sensors

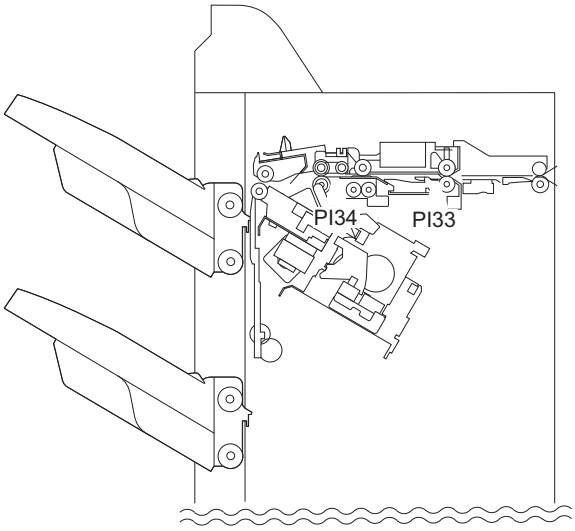

Switchback assembly jam detection

The switchback assembly uses the following sensors to detect the presence of the paper and to check whether the paper is being fed correctly or has jammed:

- Switchback inlet sensor (SR101)
- Switchback registration sensor (SR102)
- Switchback path jam sensor (SR103)

Figure 1-78 Switchback assembly sensors

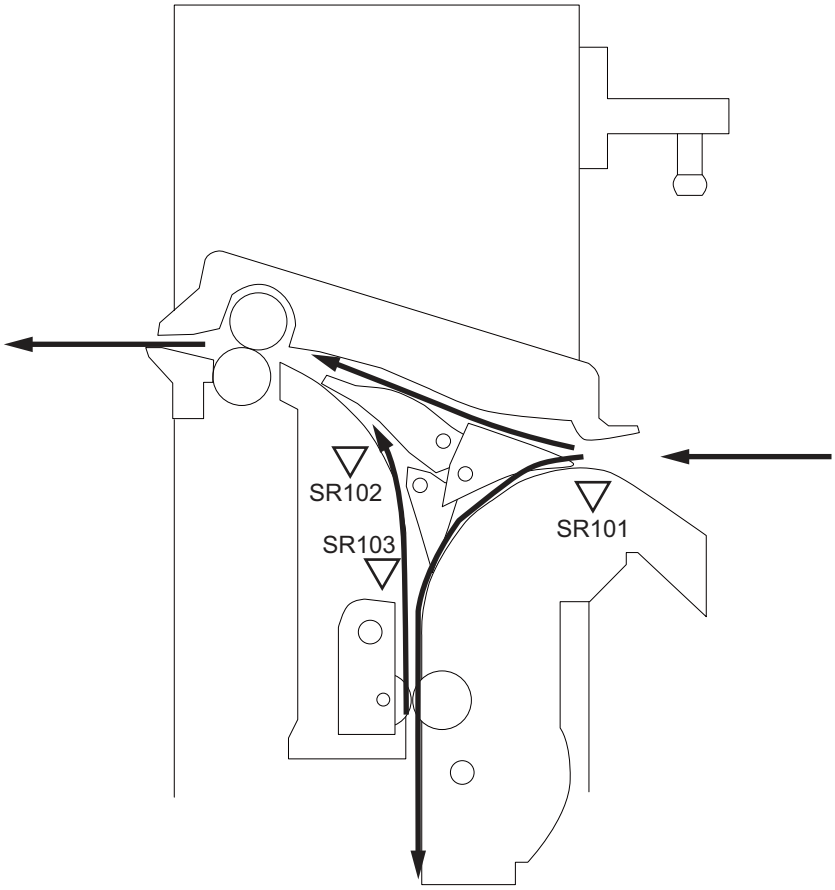

The stapler/stacker detects the following switchback jams:

Switchback inlet delay jam	The switchback inlet sensor does not detect the leading edge of paper within a specified period from when the stacker controller receives the DELIVERY signal from the product.
Switchback inlet stay jam	The switchback inlet sensor does not detect the trailing edge of paper within a specified period from when it detects the leading edge.
Switchback registration delay jam	The switchback registration sensor does not detect the leading edge of paper within a specified period from when the switchback inlet sensor detects the trailing edge.
Switchback registration stay jam	The switchback registration sensor does not detect the trailing edge of paper within a specified period from when it detects the leading edge.

Switchback path residual jam	The switchback path jam sensor does not detect a paper-absence within a specified period from when it detects a paper-presence during the residual paper detection or the automatic delivery operation.
Residual paper jam	Both of the switchback inlet sensor and switchback path jam sensor detect a paper-presence, or both of the switchback registration sensor and switchback path jam sensor detect a paper-presence during any of the following conditions: • When the power is turned on • When the door is closed • During residual paper detection • During automatic delivery operation

Hole puncher assembly jam detection

The puncher assembly uses the following sensors to detect the presence of the paper and to check whether the paper is being fed correctly or has jammed:

- Hole punch home position sensor (PI63)
- Hole punch motor clock sensor (PI62)
- Trailing edge detection sensor (LED5, PTR5)

Figure 1-79 Hole-punch assembly sensors

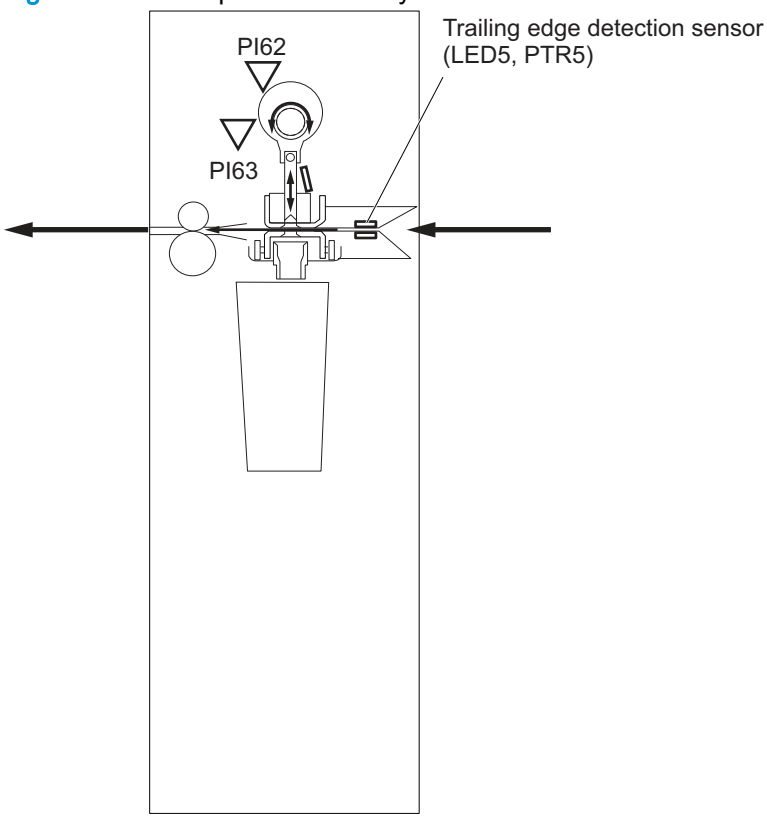

The stapler/stacker detects the following hole punch jams:

Hole punch path delay jam	The trailing edge detection sensor does not detect the leading edge of paper within a specified period from when the stacker controller receives the DELIVERY signal from the product.
Hole punch path stay jam	The trailing edge detection sensor does not detect the trailing edge of paper within a specified period from when it detects the leading edge.
hole punching jam	The hole punch home position sensor does not detect that the hole punch shaft is turned 180 degrees for a specified period during a punching operation. The hole punch motor clock sensor does not detect a specified clock pulse for a specified period during a hole punching operation.
Residual paper jam	The trailing edge detection sensor detects a paper-presence when the power is turned on or when the door is closed.

Stapler/stacker assembly jam detection

The stapler/stacker assembly uses the following sensors to detect the presence of the paper and to check whether the paper is being fed correctly or has jammed:

- Inlet sensor (PI103)
- Switchback inlet sensor (SR101, switchback assembly)
- Trailing edge detection sensor (LED5, PTR5, hole-puncher assembly)

Figure 1-80 Stapler/stacker assembly sensors

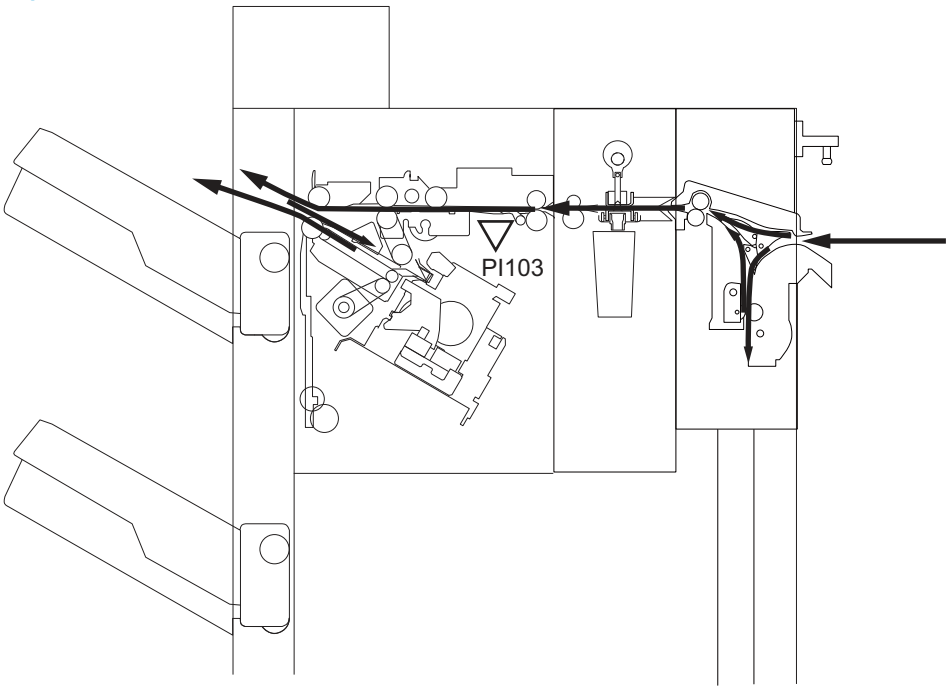

The stapler/stacker detects the following stapler/stacker jams:

Inlet delay jam	• When the paper is fed switched back and hole punching is not operated

The inlet sensor does not detect the leading edge of paper within a specified period from when the switchback inlet sensor detects the trailing edge.

- When the paper is fed straight and hole punching is not operated

  The inlet sensor does not detect the leading edge of paper within a specified period from when the switchback inlet sensor detects the leading edge.

- When hole punching is operated

  The inlet sensor does not detect the leading edge of paper within a specified period of time from when the trailing edge detection sensor detects the leading edge.

Booklet maker

The booklet maker is an optional accessory that can be installed on the left side of the product. The booklet maker delivers the printed paper to the output bin or saddle output bin. There are three types of delivery method; simple stacking, stack job offset, and staple delivery. The stacker controller and saddle stitcher controller control the operational sequence of the booklet maker. The product separation sensor detects whether the booklet maker is connected to the product.

The booklet maker is the combination of the stapler/stacker and the saddle function for the booklet maker. The switchback assembly is in common with this assembly for the stapler/stacker. The stapler/stacker assembly is described in the stapler/stacker section.

Figure 1-81 Booklet maker paper path

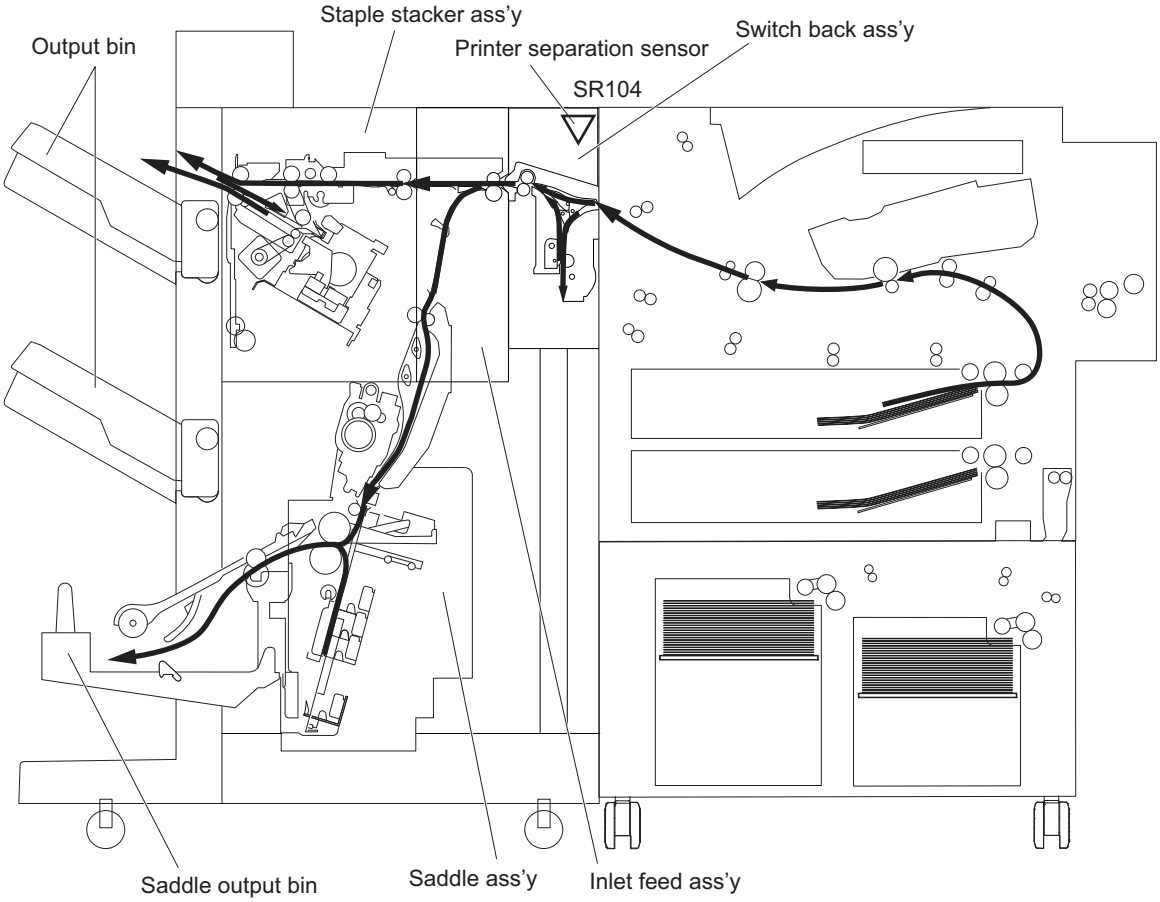

The booklet maker supports the following delivery modes for both the straight through paper path and the duplex paper path:

Table 1-35 Delivery modes

Feed	Staple/Saddle	Punch	Offset	Supported feature
Straight	No	N/A	No	Yes
Straight	No	N/A	Yes	No
Straight	Staple	N/A	No	No
Straight	Staple	N/A	Yes	No
Straight	Saddle	N/A	N/A	No

Table 1-35 Delivery modes (continued)

Feed	Staple/Saddle	Punch	Offset	Supported feature
Switchback	No	N/A	No	Yes
Switchback	No	N/A	Yes	Yes
Switchback	Staple	N/A	No	Yes
Switchback	Staple	N/A	Yes	No
Switchback	Saddle	N/A	N/A	Yes

These delivery modes are independent of each other and can be used in any combination. Hole punch is not supported with the booklet maker.

Electrical circuitry for the booklet maker unit

The saddle-stitcher controller PCA has a microprocessor that controls the sequence of operations and that handles serial communications with the stacker controller PCA. This includes driving solenoids and motors in response to the commands from the stacker controller PCA. The saddle-stitcher controller PCA communicates the state of various sensors and switches to the stacker controller PCA in serial. The functions of the major ICs mounted on the saddle stitcher controller PCA are as follows:

- IC7 (CPU): Controls the sequence of operations. Contains the sequence program.
- IC8 (communications IC): Communicates with the finisher unit.
- IC512 (regulator IC): Generates 5 V.
- IC10 (regulator IC): Communicates with the product.

Figure 1-82 Booklet maker signal flow

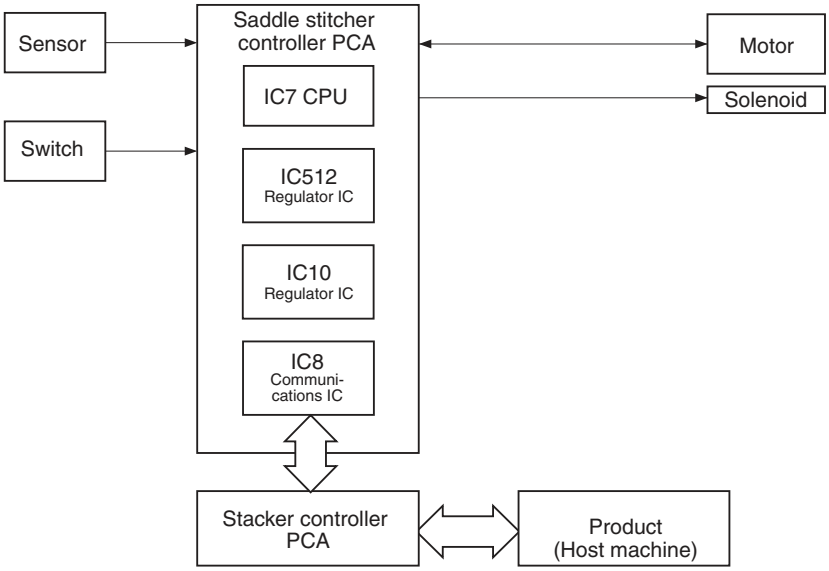

Basic operation of the booklet maker

- When receiving paper from the stacker unit, the booklet maker unit outputs paper in a vertical orientation to a vertical path.
- Two paper-deflecting plates configure the path.

- The paper-positioning plate sets the position of the paper so that the center of the stack matches the stapling/folding position.
- Subsequent paper is output closer to the delivery slot. The volume of paper that can be output is as follows: 15 sheets (maximum of 14 sheets of 80 g/m^2 + 1 sheet of 250 g/m^2).

Figure 1-83 Paper delivery for booklet maker

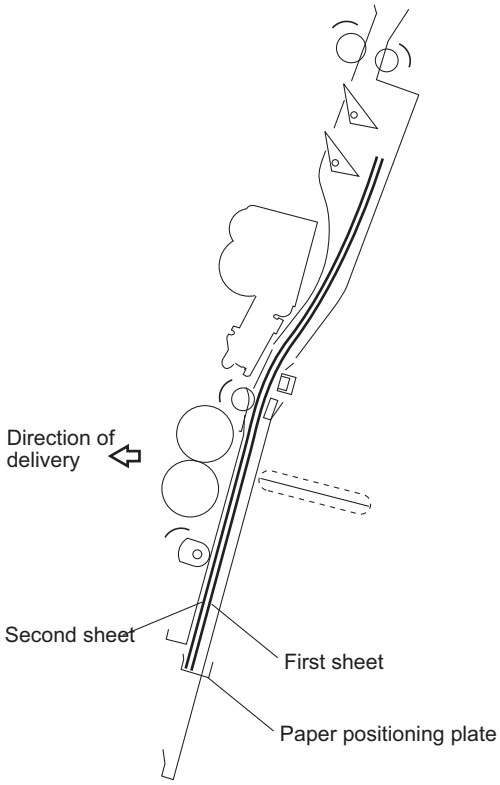

The alignment plates put the paper in order when it is output to the vertical-path assembly. Mounted at the edge of the-vertical path assembly, alignment plates also prepare the stack for delivery after stapling.

Figure 1-84 Alignment plates

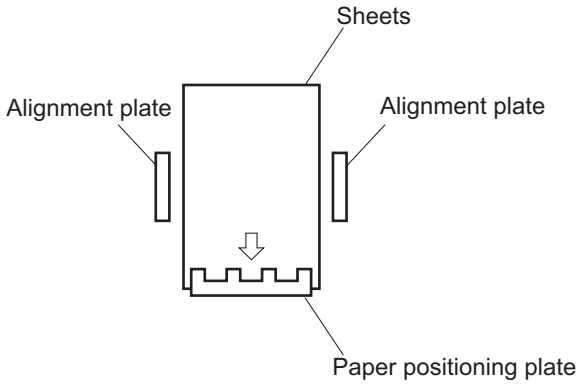

When all the paper has been output, the two stitchers staple the stack. The stitchers face the center of a stack and alternate to prevent the paper from wrinkling and to limit the load on the power supply. If only one sheet arrives, stitching does not take place and the next operation (stack feeding) occurs.

Figure 1-85 Stitching the stack

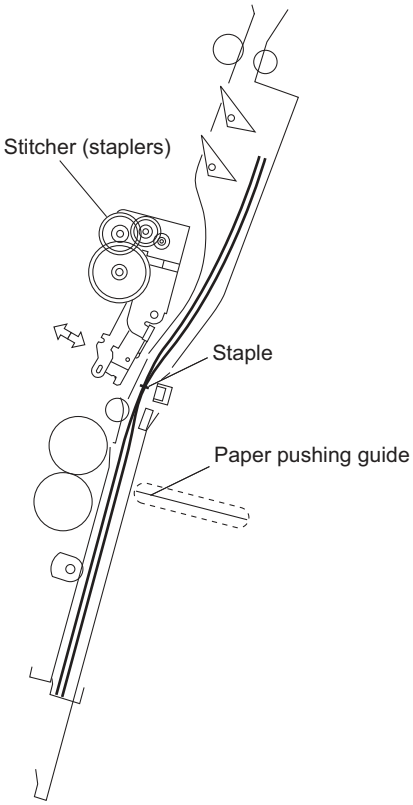

The booklet maker unit folds the stitched stack, and then feeds it to where the stapling position matches the height of the paper-pushing plate and the paper-folding roller nip. The paper-positioning plate moves the stack forward and the guide plate descends so that the paper-folding rollers directly face the stack.

Figure 1-86 Position the stack

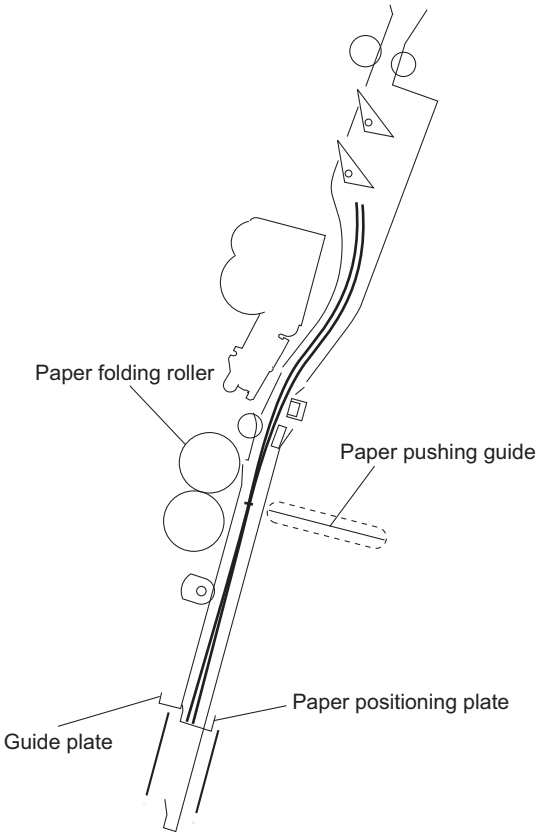

The paper-pushing plate moves the stack to the paper-folding rollers that hold the stack at its center and fold it. The paper-folding rollers and delivery roller then output the stack to the output bin.

Figure 1-87 Fold and deliver the stack

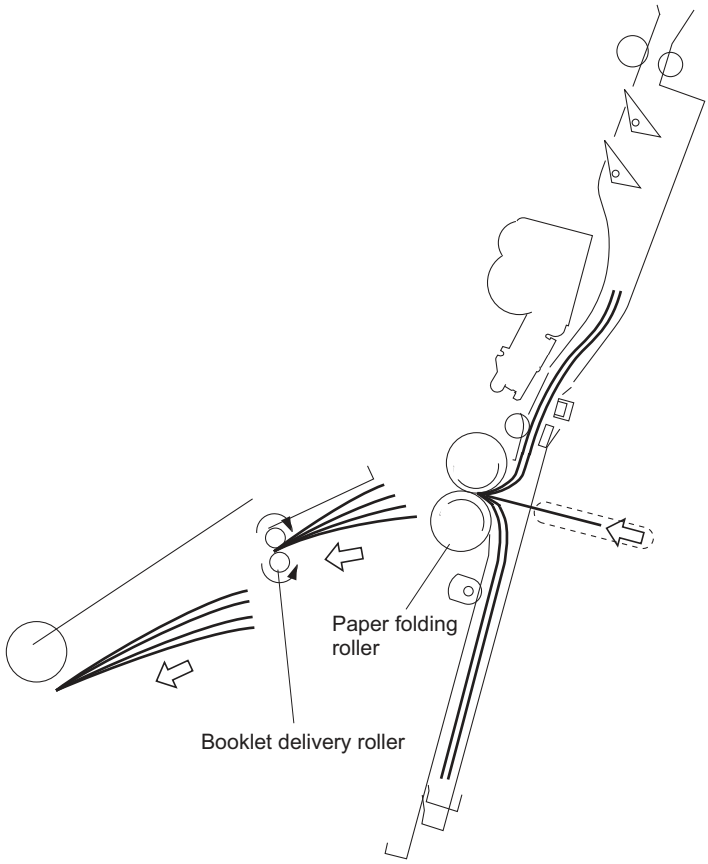

Construction of the booklet-maker-unit control system

- The paper-output mechanism keeps paper from the stacker unit in place for stapling and folding.
- The No. 1 flapper and the No. 2 flapper of the paper inlet configure the paper path to fit the paper size.
- The paper-positioning plate is kept at a predetermined location to fit the paper size.
- The paper-positioning-plate motor (M4) drives the paper-positioning plate, and the position of the plate is identified by the number of motor pulses coming from the paper-positioning-plate home-position sensor (PI7).
- The feed rollers and the crescent roller handle paper moved by the inlet roller and held in a predetermined position.
- The feed plate moves paper by coming into contact with or moving away from paper as needed.
- The alignment plates order the stack when paper is output. The alignment motor (M5) drives the alignment plates. The position of the alignment motor (M5) is identified by the number of motor pulses sent from the alignment-plate home-position sensor (PI5).
- The guide plate covers the folding rollers to prevent interference between paper and the paper-folding rollers when paper is output. The guide plate moves down before paper is folded to expose the paper-folding rollers.

- The inlet has three paper sensors (PI18, PI19, PI20) that are each suited to specific paper sizes.
- The paper-positioning plate has a paper-positioning-plate paper sensor (PI8).

Booklet maker motors

Figure 1-88 Booklet maker motors

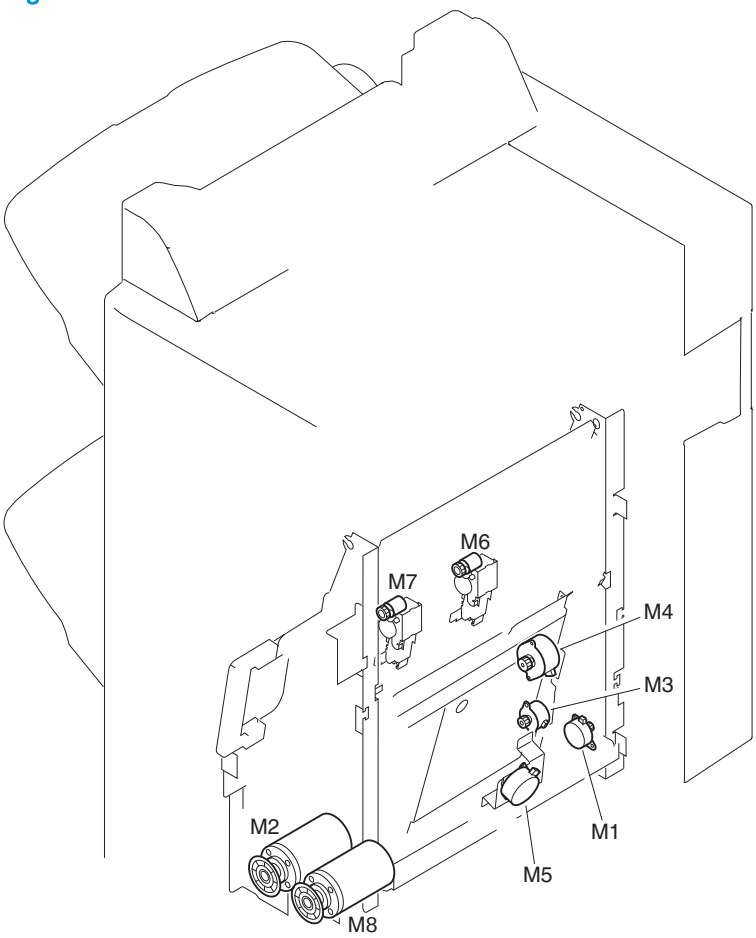

Table 1-36 Booklet maker motors

Abbreviation	Component name	Saddle-stitcher controller PCA
M1	Feed motor	J5
M2	Paper-folding motor	J23
M3	Guide motor	J12
M4	Paper-positioning-plate motor	J7
M5	Alignment motor	J7
M6	Stitcher motor (rear)	J8
M7	Stitcher motor (front)	J8
M8	Paper-pushing-plate motor	J23
M9	Saddle inlet motor	

Booklet maker paper feed and delivery

The stacker unit stacks paper delivered from the product, offsets stack jobs, or staples and delivers paper to the outputs according to commands from the product. The booklet maker unit carries, aligns, and stitches paper delivered from the product, and then feeds the resulting stack. After these operations, the booklet maker unit folds the stacks of paper and delivers them to the booklet-maker-unit output bin.

Figure 1-89 Feed drive for the booklet maker

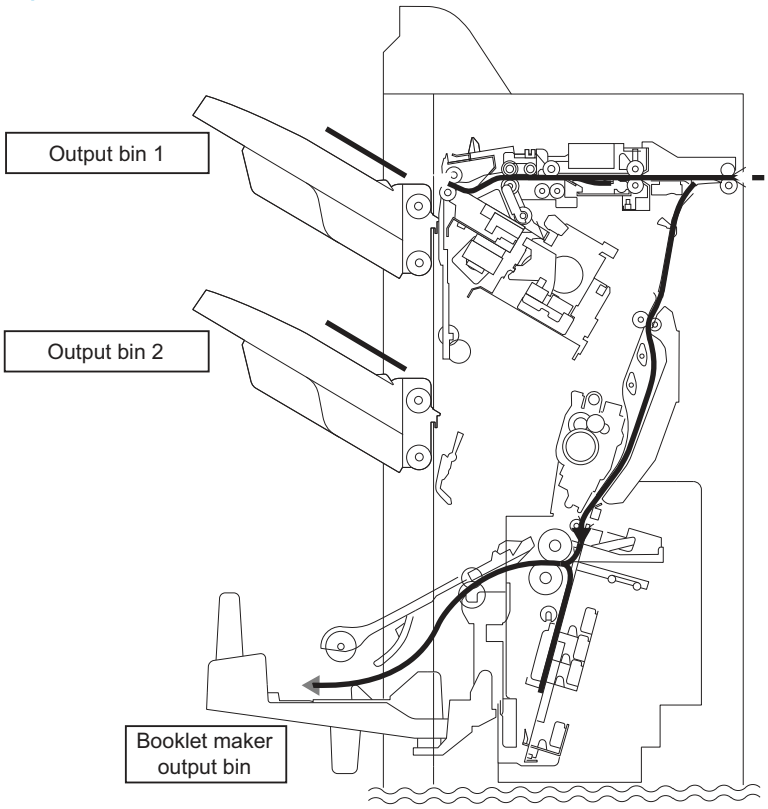

The saddle-stitcher flapper routes paper from the product to the booklet maker unit. The booklet maker unit staples, folds and then delivers the paper to the booklet-maker-unit output bin.

Figure 1-90 Booklet-maker-unit paper path

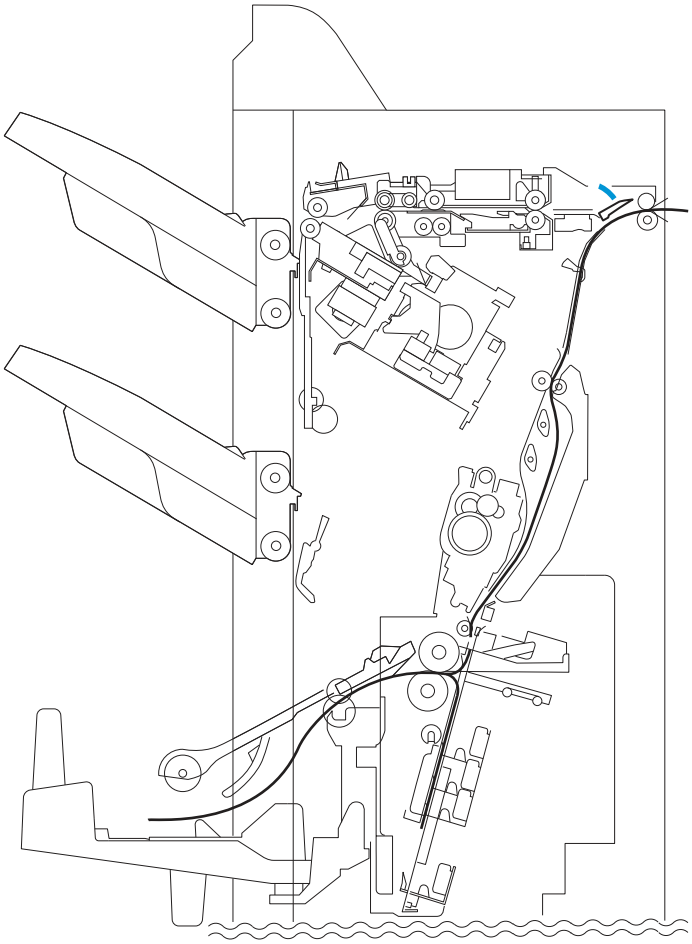

Figure 1-91 Booklet maker motors

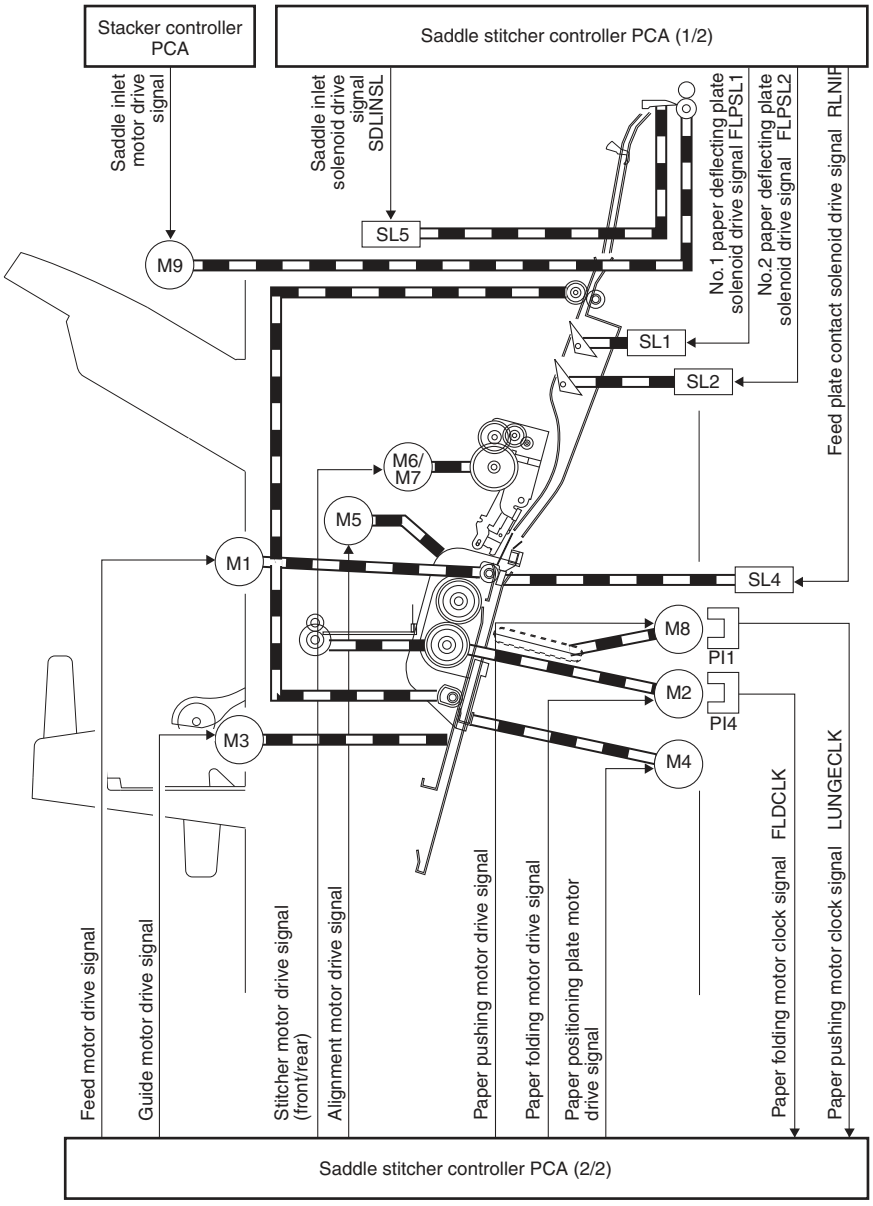

Table 1-37 Booklet maker motors

Abbreviation	Component name	Saddle-stitcher controller PCA
M1	Feed motor	J5
M2	Paper-folding motor	J23
M3	Guide motor	J12
M4	Paper-positioning-plate motor	J7
M5	Alignment motor	J7
M6	Stitcher motor (rear)	J8
M7	Stitcher motor (front)	J8

Table 1-37 Booklet maker motors (continued)

Abbreviation	Component name	Saddle-stitcher controller PCA
M8	Paper-pushing-plate motor	J23
M9	Saddle inlet motor	J34

Figure 1-92 Booklet maker sensors

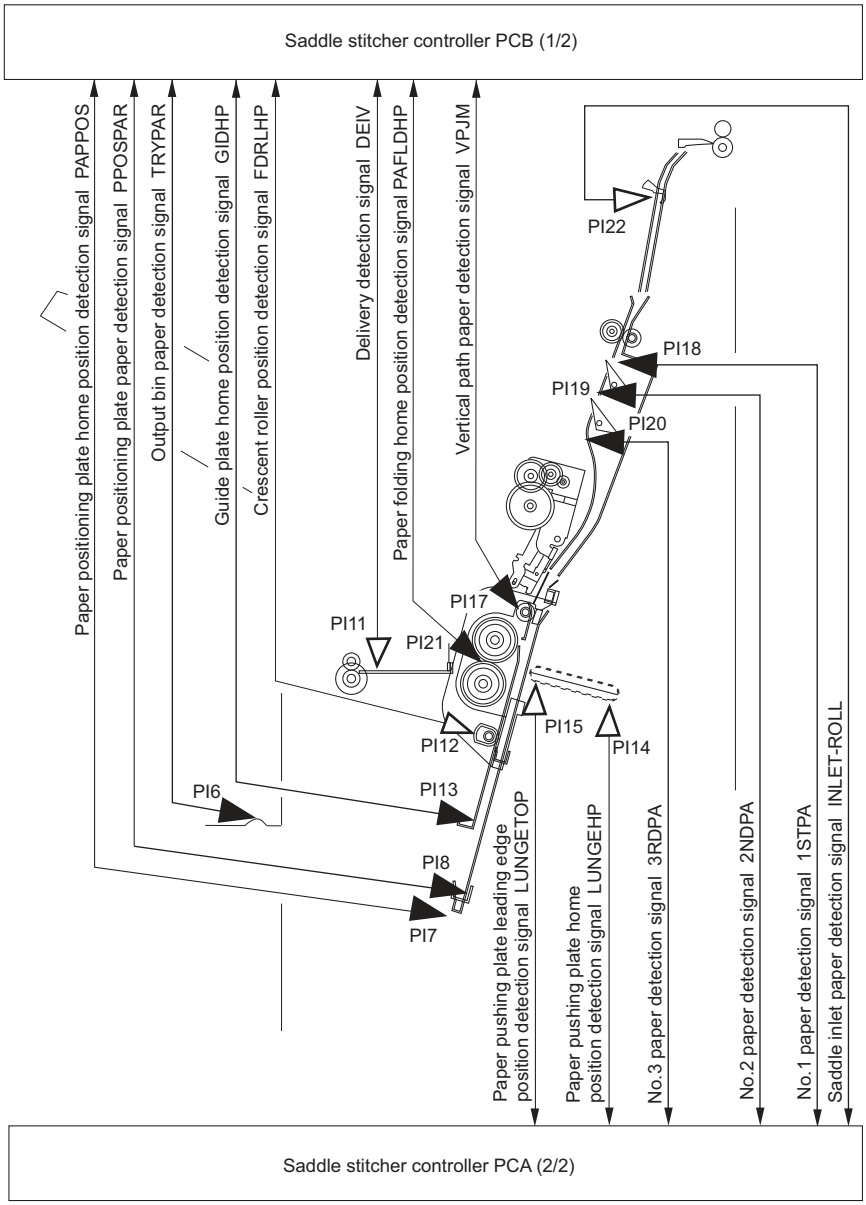

Table 1-38 Booklet maker sensors

Abbreviation	Component name	Description	Saddle-stitcher controller PCA
PI1	Paper-pushing-plate-motor clock sensor	Detects paper-pushing-plate motor clock	J3
PI3	Booklet-delivery-door sensor	Detects eject cover open	J3

Table 1-38 Booklet maker sensors (continued)

Abbreviation	Component name	Description	Saddle-stitcher controller PCA
PI4	Paper-folding-motor clock sensor	Detects paper-folding-motor clock	J3
PI5	Alignment-plate home position sensor	Detects alignment-plate home position	J3
PI6	Output-bin sensor	Detects paper on output bin	J6
PI7	Paper-positioning-plate home-position sensor	Detects paper-positioning plate home position	J6
PI8	Paper-positioning-plate paper sensor	Detects paper on paper positioning plate	J6
PI9	Saddle-guide assembly (Inlet door)	Detects inlet cover open	J9
PI11	Saddle-guide door (Inlet cover)	Detects paper ejection	J9
PI12	Crescent-roller phase sensor	Detects crescent-roller phase	J9
PI13	Guide home-position sensor	Detects guide home position	J9
PI14	Paper-pushing-plate home position sensor	Detects paper-pushing-plate home position	J9
PI15	Paper-pushing-plate top position sensor	Detects paper-pushing-plate leading-edge position	J13
PI16	Stitcher-unit IN sensor	Detects stitcher-unit storage	J13
PI17	Vertical-path paper sensor	Detects paper in vertical path	J10
PI18	No.1 paper sensor (#1 Flapper paper sensor)	Detects paper (No. 1; on paper sensor PCA)	J10
PI19	No.2 paper sensor (#2 Flapper paper sensor)	Detects paper (No. 2; on paper sensor PCA)	J10
PI20	No.3 paper sensor	Detects paper (No. 3; on paper sensor PCA)	J10
PI21	Paper-folding home-position sensor	Detects paper-fold home position	J18
PI22	Booklet-making paper-entry sensor	Detects saddle-inlet paper	J21

Figure 1-93 Booklet maker switches and microswitches

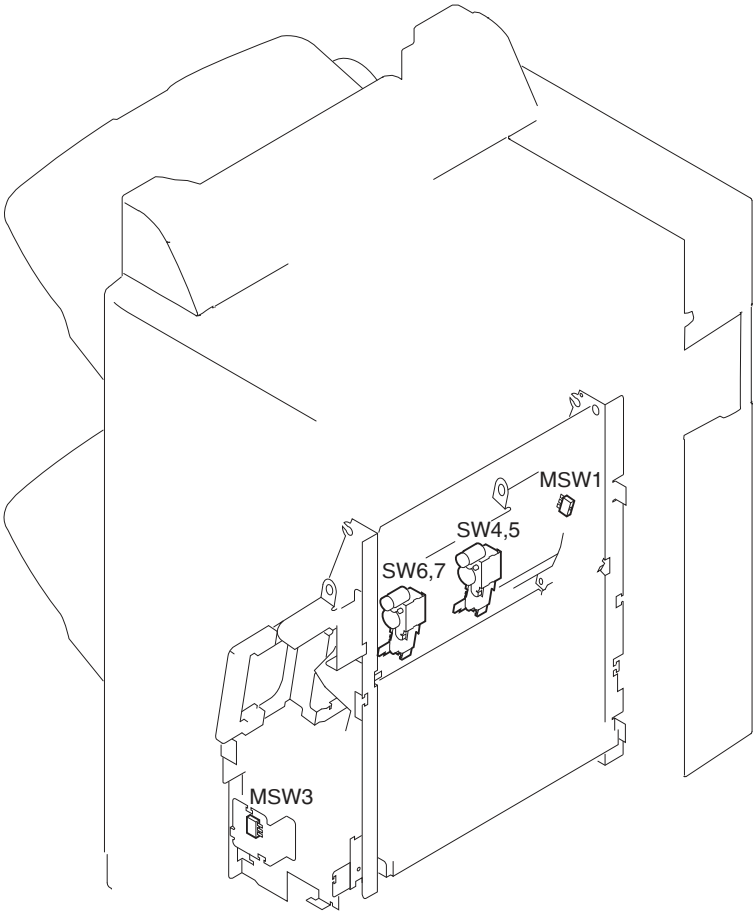

Abbreviation	Component name	Description	Stacker controller PCA
MSW1	Saddle-guide-assembly switch (Inlet switch)	Detects saddle-guide assembly (inlet door) open	J4
MSW3	Delivery-door switch	Detects ejection door open	J4
SW4	Staple sensor (rear)	Detects presence of staples (rear)	J8
SW5	Stitcher home-position sensor (rear)	Detects stitching home position (rear)	J8
SW6	Staple sensor (front)	Detects presence of staples (front)	J8
SW7	Stitcher home-position sensor (front)	Detects stitching home position (front)	J8

Booklet maker jam detection

The saddle stitcher unit identifies any of the following conditions as a jam, and sends the jam signal to the product. When all doors are closed after the jam is removed, the saddle stitcher unit checks whether the vertical-path paper sensor (PI17) has detected the presence of paper. If the sensor has detected paper, the unit identifies the condition as being a faulty jam removal and sends the jam signal to the product once again.

Figure 1-94 Detecting jams in the booklet maker unit

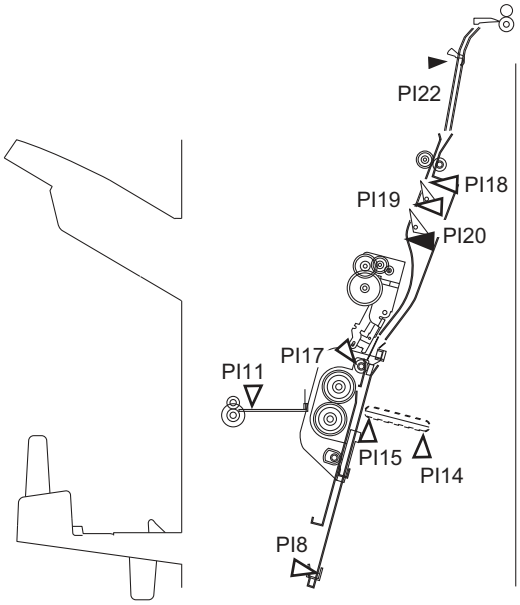

Table 1-39 Booklet maker jam sensors

Abbreviation	Component name	Description	Saddle-stitcher controller PCA
PI1	Paper-pushing-plate-motor clock sensor	Detects paper-pushing-plate motor clock	J3
PI3	Booklet-delivery-door sensor	Detects eject cover open	J3
PI4	Paper-folding-motor clock sensor	Detects paper-folding-motor clock	J3
PI5	Alignment-plate home position sensor	Detects alignment-plate home position	J3
PI6	Output-bin sensor	Detects paper on output bin	J6
PI7	Paper-positioning-plate home-position sensor	Detects paper-positioning plate home position	J6
PI8	Paper-positioning-plate paper sensor	Detects paper on paper positioning plate	J6
PI9	Saddle-guide assembly (Inlet door)	Detects inlet cover open	J9
PI11	Saddle-guide door (Inlet cover)	Detects paper ejection	J9
PI12	Crescent-roller phase sensor	Detects crescent-roller phase	J9
PI13	Guide home-position sensor	Detects guide home position	J9
PI14	Paper-pushing-plate home position sensor	Detects paper-pushing-plate home position	J9

Table 1-39 Booklet maker jam sensors (continued)

Abbreviation	Component name	Description	Saddle-stitcher controller PCA
PI15	Paper-pushing-plate top position sensor	Detects paper-pushing-plate leading-edge position	J13
PI16	Stitcher-unit IN sensor	Detects stitcher-unit storage	J13
PI17	Vertical-path paper sensor	Detects paper in vertical path	J10
PI18	No.1 paper sensor (#1 Flapper paper sensor)	Detects paper (No. 1; on paper sensor PCA)	J10
PI19	No.2 paper sensor (#2 Flapper paper sensor)	Detects paper (No. 2; on paper sensor PCA)	J10
PI20	No.3 paper sensor	Detects paper (No. 3; on paper sensor PCA)	J10
PI21	Paper-folding home-position sensor	Detects paper-fold home position	J18
PI22	Booklet-making paper-entry sensor	Detects saddle-inlet paper	J21

Booklet maker delivery modes

Table 1-40 Booklet maker delivery modes

Feed	Staple/Saddle	Punch	Offset	Supported function
Straight	No	N/A	No	Yes
Straight	No	N/A	Yes	No
Straight	Staple	N/A	No	No
Straight	Staple	N/A	Yes	No
Straight	Saddle	N/A	N/A	No
Switchback	No	N/A	No	Yes
Switchback	No	N/A	Yes	Yes
Switchback	Staple	N/A	No	Yes
Switchback	Staple	N/A	Yes	No
Switchback	Saddle	N/A	N/A	Yes

2 Solve problems

- Solve problems checklist
- Menu map
- Preboot menu options
- Current settings pages
- Troubleshooting process
- Tools for troubleshooting
- Clear jams
- Paper feeds incorrectly or becomes jammed
- Use manual print modes
- Solve image quality problems
- Clean the product
- Solve performance problems
- Solve connectivity problems
- Service mode functions
- Solve fax problems
- Product upgrades

Solve problems checklist

If the product is not correctly functioning, complete the steps (in the order given) in the following checklist. If the product fails a checklist step, follow the corresponding troubleshooting suggestions for that step. If a checklist step resolves the problem, skip the remaining checklist items.

1. If the control panel is blank or black, complete these steps:

   a. Check the power cable.

   b. Check that the power is turned on.

   c. Make sure that the line voltage is correct for the product power configuration. (See the label that is on the back of the product for voltage requirements.) If you are using a power strip and its voltage is not within specifications, connect the product directly into the electrical outlet. If it is already connected into the outlet, try a different outlet.

2. The control panel should indicate a **Ready**, **Paused**, or **Sleep mode on** status. If an error message displays, resolve the error.

   - Use the Power-on checks section in the product troubleshooting service manual to solve the problem

3. Check the cables.

   a. Check the power and network cable connections between the product and the computer or network port. Make sure that the connections are secure.

   b. Make sure that the cables are not faulty by trying different cables, if possible.

   c. Check the network connection.

4. Make sure that the selected paper size and type meet HP specifications. Also open the Trays menu on the product control panel and verify that the tray is configured correctly for the paper type and size.

5. Print a configuration page. If the product is connected to a network, an HP Jetdirect page also prints.

   a. From the Home screen on the product control panel, scroll to and touch the Administration button.

   b. Open the following menus:

      - Reports
      - Configuration/Status Pages
      - Configuration Page

   c. Touch the Print button to print the page.

      - If the pages do not print, check that at least one tray contains paper.
      - If the page jams in the product, follow the instructions on the control panel to clear the jam.

- If the page does not print correctly, the problem is with the product hardware.
- If the page prints correctly, the product hardware is working. The problem is with the computer you are using, with the print driver, or with the program.

6. Print a supplies status page and then check that the maintenance items below are not at their end-of-life.

   TIP: If a maintenance item needs to be replaced, order the part number provided below.

   a. From the Home screen on the product control panel, scroll to and touch the Administration button.

   b. Open the following menus:

      - Reports
      - Configuration/Status Pages
      - Supplies Status Page

   c. Touch the Print button to print the page, and then check the following maintenance items:

      - Maintenance kit 110V/220V (includes the fuser, pickup and feed rollers, and secondary transfer roller); estimated life: 200,000 pages
        - 110V C2H67A
        - 220V C2H57A
      - ADF roller maintenance kit; estimated life: 100,000 pages
        - C1P70A

7. Verify that you have installed the print driver for this product. Check the program to make sure that you are using the print driver for this product. The print driver is on the CD that came with the product, or can be downloaded from this Web site: www.hp.com/go/ljM806_software and www.hp.com/go/ljflowMFPM830_software.

8. Print a short document from a different program that has worked in the past. If this solution works, the problem is with the program. If this solution does not work (the document does not print), complete these steps:

   a. Try printing the job from another computer that has the product software installed.

   b. If you connected the product to the network, connect the product directly to a computer with a USB cable. Redirect the product to the correct port, or reinstall the software, selecting the new connection type that you are using.

Menu map

You can print a report of the complete Administration menu so you can more easily navigate to the individual settings you need.

1. From the Home screen on the product control panel, scroll to and touch the Administration button.
2. Open the following menus:
   - Reports
   - Configuration/Status Pages
3. Select the Administration Menu Map option.
4. Touch the Print button to print the report.

Preboot menu options

If an error occurs while the product is initializing, an error message displays on the control-panel display. The user can open the Preboot menus. The error menu item will not be seen if an error did not occur.

CAUTION: The Format Disk option performs a disk initialization for the entire disk. The operating system, firmware files, and third party files (among other files) will be completely lost. HP does not recommend this action.

Open the Preboot menu

1. Turn the product on.
2. The HP logo displays on the product control panel. When a "1/8" with an underscore displays below the HP logo, touch the logo to open the Preboot menu.
3. Use the arrow buttons on the touchscreen to navigate the Preboot menu.
4. Touch the OK button to select a menu item.

Cold reset using the Preboot menu

1. Turn the product on.
2. The HP logo displays on the product control panel. When a "1/8" with an underscore displays below the HP logo, touch the logo to open the Preboot menu.
3. Use the down arrow button to highlight the Administrator item, and then touch the OK button.
4. Use the down arrow button to highlight the Startup Options item, and then touch the OK button.
5. Use the down arrow button to highlight the Cold Reset item, and then touch the OK button.
6. Touch the Home button to highlight the Continue item, and then touch the OK button.

NOTE: The product will initialize.

Table 2-1 Preboot menu options (1 of 6)

Menu option	First level	Second level	Third level	Description
Continue				Selecting the Continue item exits the Preboot menu and continues the normal boot process. If a selection is not made in the initial menu within 30 seconds, the product returns to a normal boot (the same as selecting Continue). If the user navigates to another menu, the timeout does not apply.
Sign In				Enter the administrator PIN or service PIN if one is required to open the Preboot menu.

Table 2-1 Preboot menu options (1 of 6) (continued)

Menu option	First level	Second level	Third level	Description
Administrator				This item navigates to the Administrator submenus. If authentication is required (and the user is not already signed in) the Sign In prompt displays. The user is required to sign in.
	Download	Network USB USB Thumbdrive		This item initiates a preboot firmware download process. A USB drive option will work on all FutureSmart products. USB or Network connections are not currently supported.
	Format Disk			This item reinitializes the disk and cleans all disk partitions. CAUTION: Selecting the Format Disk item removes **all** data. A delete confirmation prompt is **not** provided. The system is **not** bootable after this action and a **99.09.67** error displays on the control panel. A firmware download must be performed to return the system to a bootable state.
	Partial Clean			This item reinitializes the disk (removing all data except the firmware repository where the master firmware bundle is downloaded and saved). CAUTION: Selecting the Partial Clean item removes **all** data except the firmware repository. A delete confirmation prompt is **not** provided. This allows a user to reformat the disk by removing the firmware image from the active directory without having to download new firmware code (product remains bootable).
	Change Password			Select this item to set or change the administrator password.
	Clear Password			Select the Clear Password item to remove a password from the Administrator menu. Before the password is actually cleared, a message will be shown asking to confirm that the password should be cleared. Press the OK button to confirm the action. When the confirmation prompt displays, press the OK button to clear the password.

Table 2-2 Preboot menu options (2 of 6)

Menu option	First level	Second level	Third level	Description
Administrator continued	Manage Disk	Clear disk		Select the Clear disk item to disable using an external device for job storage. Job storage is normally enabled only for the Boot device. This will be grayed out unless the **99.09.68** error is displayed.
		Lock Disk		Select the Lock Disk item to lock (mate) a new secure disk to this product. The secure disk already locked to this product will remain accessible to this product. Use this function to have more than one encrypted disk accessible by the product when using them interchangeably. The data stored on the secure disk locked to this product always remains accessible to this product.
		Leave Unlocked		Select the Leave Unlocked item to use a new secure disk in an unlocked mode for a single service event. The secure disk that is already locked to this product will remain accessible to this product and uses the old disk's encryption password with the new disk. The secure disk that is already locked to this product remains accessible to this product.
		Clear Disk Pwd		Select the Clear Disk Pwd item to continue using the non-secure disk and clear the password associated with the yet-to-be installed secure disk. CAUTION: Data on the missing secure disk will be permanently inaccessible.
		Retain Password		Select the Retain Password item to use the non-secure disk for this session only, and then search for the missing secure disk in future sessions.
		Boot Device	Secure Erase	Select the Secure Erase item to erase all of the data on the disk and unlock it if required. This might take a long time. NOTE: The system will be unusable until the system files are reinstalled. The ATA secure-erase command is a one-pass overwrite, which erases the entire disk including firmware. The disk remains an encrypted disk.
			Erase/Unlock	Select the Erase/Unlock item to cryptographically erase all data on the disk and unlock the disk to allow a user to gain access to it from any product. NOTE: The system will be unusable until the system files are reinstalled. It erases the encryption key. The encryption key is erased, so the disk becomes a non-encrypted disk.
			Get Status	This item provides disk status information if any is available.

Table 2-3 Preboot menu options (3 of 6)

Menu option	First level	Second level	Third level	Description
Administrator continued	Manage Disk continued	Internal Device		Select the Internal Device item to erase the internal device or get a status about the internal device.
			Secure Erase	Select the Secure Erase item to erase all of the data on the disk and unlock it if required. This might take a long time. NOTE: The system will be unusable until the system files are reinstalled. The ATA secure-erase command erases the entire disk, including firmware. The disk remains an encrypted disk.
			Erase/Unlock	Select the Erase/Unlock item to cryptographically erase all of the data on disk and unlock the disk to allow the user to gain access to it from any product. NOTE: The system will be unusable until the system files are reinstalled. The HP High Performance Secure Hard Disk is erased.
			Get Status	This item provides disk status information if any is available.
		External Device		Select the External Device item to erase the internal device or get status about the internal device.
			Secure Erase	Select the Secure Erase item to erase all of the data on the disk and unlock it if required. This might take a long time. NOTE: The system will be unusable until the system files are reinstalled. The ATA secure-erase command erases the entire disk, including firmware. The disk remains an encrypted disk.
			Erase/Unlock	Select the Erase/Unlock item to cryptographically erase all of the data on disk and unlock the disk to allow a user to gain access to it from any product. NOTE: The system will be unusable until the system files are reinstalled. The encryption key is erased, so the disk becomes a non-encrypted disk.
			Get Status	This item provides disk status information if any is available.

Table 2-4 Preboot menu options (4 of 6)

Menu option	First level	Second level	Third level	Description
Administrator continued	Configure LAN			Select the Configure LAN item to set up the network settings for the Preboot menu firmware upgrade. The network can be configured to obtain the network settings from a DHCP server or as static.
		IP Mode [DHCP]		Use this item for automatic IP address acquisition from the DHCP server.
		IP Mode [STATIC]		Use this item to manually assign the network addresses.
			IP Address	Use this item to manually enter the IP addresses.
			Subnet Mask	Use this item to manually enter the subnet mask.
			Default Gateway	Use this item to manually enter the default gateway.
			Save	Select the Save item to save the manual settings.

Table 2-5 Preboot menu options (5 of 6)

Menu option	First level	Second level	Third level	Description
Administrator continued	Startup Options			Select the Startup Options item to specify options that can be set for the next time the product is turned on and initializes to the **Ready** state.
		Show Revision		**Not currently functional**: Select the Show Revision item to allow the product to initialize and show the firmware version when the product reaches the **Ready** state. Once the product power is turned on the next time, the Show Revision item is unchecked so that the firmware revision is not shown.
		Cold Reset		Select the Cold Reset item to clear the IP address and all customer settings. (This item also returns all settings to factory defaults.) NOTE: Items in the Service menu are not reset.
		Skip Disk Load		Select the Skip Disk Load item to disable installed third-party applications.
		Skip Cal		Select the Skip Cal item to initialize the product the next time the power is turned on without calibrating.
		Lock Service		CAUTION: Select the Lock Service item to lock the Service menu access (both in the Preboot menu and the Device Maintenance menu). Service personnel must have the administrator remove the Lock Service setting before they can open the Service menu.
		Skip FSCK		Select the Skip FSCK item to disable Chkdisk/ScanVolume during startup.

Table 2-5 Preboot menu options (5 of 6) (continued)

Menu option	First level	Second level	Third level	Description
Administrator continued	Startup Options continued	First Power		**Not currently functional**: This item allows the product to initialize as if it is the first time it has been turned on. For example, the user is prompted to configure first-time settings like date/time, language, and other settings. Select this item so that it is enabled for the next time the product power is turned on. When the product power is turned on the next time, this item is unchecked so that the pre-configured settings are used during configuration, and the first-time setting prompt is not used.
		Embedded Jetdirect Off		Select the Embedded Jetdirect Off item to disable the embedded HP Jetdirect. By default this item is unchecked so that HP Jetdirect is always enabled.
		WiFi Accessory		Select the WiFi Accessory item to enable the wireless accessory.

Table 2-6 Preboot menu options (6 of 6)

Menu option	First level	Second level	Third level	Description
Administrator continued	Diagnostics	Memory	Do Not Run	Diagnostic items are useful for troubleshooting formatter problems. Use the options below the Do Not Run item to help troubleshoot formatter problems.
			Short	
			Long	
		Disk	Do Not Run	
			Short	
			Long	
			Optimized	
			Raw	
			Smart	
		ICB		
		CPB		
		Interconnect Run Selected		
	Remote Admin	Start Telnet		The Remote Admin item allows a service technician to gain access to the product remotely to troubleshoot issues.
		Stop Telnet		
		Refresh IP		

Table 2-6 Preboot menu options (6 of 6) (continued)

Menu option	First level	Second level	Third level	Description
	System Triage	Copy Logs		If you cannot print the error logs, the System Triage item allows you to copy the error logs to a flash drive on the next startup. The files can then be sent to HP to help determine the problem.
Service Tools				This item requires the service access code. If the product does not reach the **Ready** state, you can use this item to print the error logs. The logs can be copied to a USB drive when the product is initialized, and then these files can be sent to HP to help determine what is causing the problem.
	Reset Password			Use this item to reset the administrator password.
	Subsystems			For manufacturing use only. Do not change these values.
Developer Tools	Netexec			

Current settings pages

Printing the current settings pages provides a map of the user configurable settings that might be helpful in the troubleshooting process.

1. From the Home screen on the product control panel, scroll to and touch the Administration button.
2. Open the following menus:
   - Reports
   - Configuration/Status Pages
3. Select the Current Settings Page option.
4. Touch the Print button to print the report.

Troubleshooting process

Determine the problem source

When the product malfunctions or encounters an unexpected situation, the product control panel alerts you to the situation. This section contains a pre-troubleshooting checklist to filter out many possible causes of the problem. A troubleshooting flowchart helps you diagnose the root cause of the problem. The remainder of this chapter provides steps for correcting problems.

- Use the troubleshooting flowchart to pinpoint the root cause of hardware malfunctions. The flowchart guides you to the section of this chapter that contains steps for correcting the malfunction.

Before beginning any troubleshooting procedure, check the following issues:

- Are supply items within their rated life?
- Does the configuration page reveal any configuration errors?

NOTE: The customer is responsible for checking supplies and for using supplies that are in good condition.

Troubleshooting flowchart

This flowchart highlights the general processes that you can follow to quickly isolate and solve product hardware problems.

Each row depicts a major troubleshooting step. A “yes” answer to a question allows you to proceed to the next major step. A “no” answer indicates that more testing is needed. Go to the appropriate section in this chapter, and follow the instructions there. After completing the instructions, go to the next major step in this troubleshooting flowchart.

Table 2-7 Troubleshooting flowchart

1 **Power on**	Is the product on and does a readable message display?		Follow the power-on troubleshooting checks. See Power subsystem on page 140. After the control panel display is functional, see step 2.
	Yes ↓	No →	
2 **Control panel messages**	Does the message **Ready** display on the control panel?		After the errors have been corrected, go to step 3.
	Yes ↓	No →	
3 **Event log**	Open the Troubleshooting menu and print an event log to see the history of errors with this product. Does the event log print?		If the event log does not print, check for error messages. If paper jams inside the product, see the jams section of the product service manual. If error messages display on the control panel when you try to print an event log, see the control panel message section of the service manual. After successfully printing and evaluating the event log, see step 4.
	Yes ↓	No →	

Table 2-7 Troubleshooting flowchart (continued)

4 Information pages	Open the Reports menu and print the configuration pages to verify that all the accessories are installed. Are all the accessories installed?		If accessories that are installed are not listed on the configuration page, remove the accessory and reinstall it. After evaluating the configuration pages, see step 5.
	Yes ↓	No →	
5 Print quality	Does the print quality meet the customer's requirements?		Compare the images with the sample defects in the image defect tables. See the images defects table in the product service manual. After the print quality is acceptable, see step 6.
	Yes ↓	No →	
6 Interface	Can the customer print successfully from the host computer?		Verify that all I/O cables are connected correctly and that a valid IP address is listed on the HP Jetdirect configuration page. If error messages display on the control panel when you try to print an event log, see the control-panel message section of the service manual. When the customer can print from the host computer, this is the end of the troubleshooting process.
	Yes. This is the end of the troubleshooting process.	No →	

Power subsystem

Power-on checks

The basic product functions should start up when the product is connected into an electrical outlet and the power switch is pushed to the *on* position. If the product does not start, use the information in this section to isolate and solve the problem.

If the control panel display remains blank, random patterns display, or asterisks remain on the control panel display, perform power-on checks to find the cause of the problem.

Power-on troubleshooting overview

During normal operation, a cooling fan begins to spin briefly after the product power is turned on. Place your hand over the vents in the left-side cover, above the formatter. If the fan is operating, you will feel air passing out of the product. You can lean close to the product and hear the fan operating. You can also place your hand over the vents on the right side of the rear cover. If the fan is operating, you should feel air being drawn into the product.

After the fan is operating, the main motor turns on (unless the right or front cover is open, a jam condition is sensed, or the paper-path sensors are damaged). You might be able to visually and audibly determine if the main motor is turned on.

If the fan and main motor are operating correctly, the next troubleshooting step is to isolate print engine, formatter, and control panel problems. Perform an engine test. If the formatter is damaged, it might interfere with the engine test. If the engine-test page does not print, try removing the formatter, and then performing the engine test again. If the engine test is then successful, the problem is almost certainly with the formatter, the control panel, or the cable that connects them.

If the control panel is blank when you turn on the product, check the following items:

1. Make sure that the product is connected directly into an active electrical outlet (not a power strip) that delivers the correct voltage.
2. Make sure that the power switch is in the *on* position.
3. Make sure that the fan runs briefly, which indicates that the power supply is operational.
4. Make sure that the control-panel display wire harness is connected.
5. Make sure that the formatter is seated and operating correctly. Turn off the product and remove the formatter. Reinstall the formatter, make sure the power switch is in the on position, and then verify that the heartbeat LED is blinking.
6. Remove any external solutions, and then try to turn the product on again.

NOTE: If the control panel display is blank, but the main cooling fan runs briefly after the product power is turned on, try printing an engine-test page to determine whether the problem is with the control-panel display, formatter, or other product assemblies.

Control-panel checks

The product includes a diagnostic test mode for the control panel. This mode allows you to troubleshoot issues with the touchscreen, the Speaker, and the Home button.

TIP: To diagnose control-panel problems, see Control-panel diagnostic flowcharts on page 144.

NOTE: Some of the diagnostic tests are for factory use only.

Open diagnostic mode

- Tilt the control panel forward. On the back side of the control panel, remove the round black-rubber cover near the center of the control panel, and then press the button inside the hole to access the diagnostic mode.

  Repeatedly pressing the button will scroll through additional screens on the control-panel display. Continue to press the button to scroll back to the diagnostic-mode main test screen.

Exit diagnostic mode

Do one of the following:

- Touch the Cancel button.
- Wait 20 seconds. The control panel will return to the Home screen.

Table 2-8 Control-panel diagnostic functions

Item	Description	Remarks
Cancel button	Exits a test	

Table 2-8 Control-panel diagnostic functions (continued)

Item	Description	Remarks
Keypad	Selects test settings in some of the test windows	
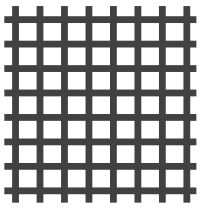 Red-grid touch test	Verifies that all areas respond to a touch	Use this item to check the accuracy of the touch screen. Use a finger or 3 mm (.118 in) conductive stylus to trace between the grid lines to check the accuracy of the touchscreen calibration. NOTE: The gap between the grid lines is 6 mm (.236 in). When the screen is touched, a line or a dot displays on the screen (the X and Y coordinates of the position on the screen are also displayed).
Calibration touch test	Checks calibration	Use this item to determine if the touchscreen calibration is within the acceptable range. When selected, ten target points (and the X and Y coordinates of the position of the target point) display on the screen. Touching a target causes the X and Y coordinate of that target to appear in the middle of the touchscreen (above the cancel button). NOTE: The product automatically calibrates the touchscreen. A manual touchscreen calibration procedure is not available for this product.
Touchscreen LED display test	Selects a test pattern to view on the display.	Use this item to identify touchscreen LED display problems. 1. Touch the icon. 2. Touch the up or down arrow buttons to scroll though touchscreen LED display test screens.
Speaker test	Tests sounds	Use this item to test audio functionality. 1. Touching this item causes the speaker to emit a tone. 2. Touch the 2 button on the keypad, and then touch this item to cause the speaker to emit a more complex tone.

Table 2-8 Control-panel diagnostic functions (continued)

Item	Description	Remarks
Firmware information	Shows the firmware version	Touch this item to display the control-panel firmware version and firmware build date.
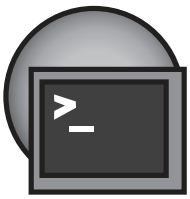	Factory use only	
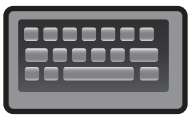 Keyboard test	Tests the product keyboard NOTE: For products with a keyboard feature only.	When this item is selected, pressing a button on the keyboard causes the corresponding character to appear on the control-panel display. 1. Touch the icon. 2. Press a button on the keyboard. The corresponding character should appear on the control-panel display.
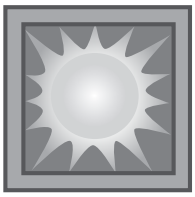 Backlight test	Adjusts the backlight	Use this item to adjust the brightness of the control-panel display. 1. Touch the icon. 2. Touch the up or down arrow buttons to adjust the backlight level.
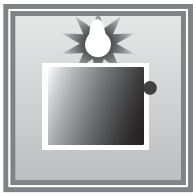 Ambient-light sensor test	Checks the ambient light sensor	Use this item to test the ambient-light sensor functionality. 1. Touch the icon. 2. Shine a flashlight at the control panel to the left of, and down about 25.4 mm (1 in,) from the Home button. 3. The numbers displayed below the icon should be any value other than zero.
Home button test	Tests the Home button	Use this item to test the Home button LED and switch functionality. 1. Touch the icon. 2. Press the Home button on the right side of the control panel. The LED icon on the control-panel display illuminates if the button LED and switch are correctly functioning.

Control-panel diagnostic flowcharts

TIP: Tilt the control panel forward. On the back side of the control panel, remove the round black-rubber cover near the center of the control panel, and then press the button inside the hole to access the diagnostic mode.

Use the flowcharts in this section to troubleshoot the following control panel problems.

- Touchscreen is blank, white, or dim (no image).
- Touchscreen is slow to respond or requires multiple presses to respond.
- Touchscreen has an unresponsive zone.
- No control-panel sound.
- Home button is unresponsive.
- Hardware integration pocket (HIP) is not functioning (control panel functional).

Touchscreen black, white, or dim (no image)

Figure 2-1 Touchscreen blank, white, or dim (no image)

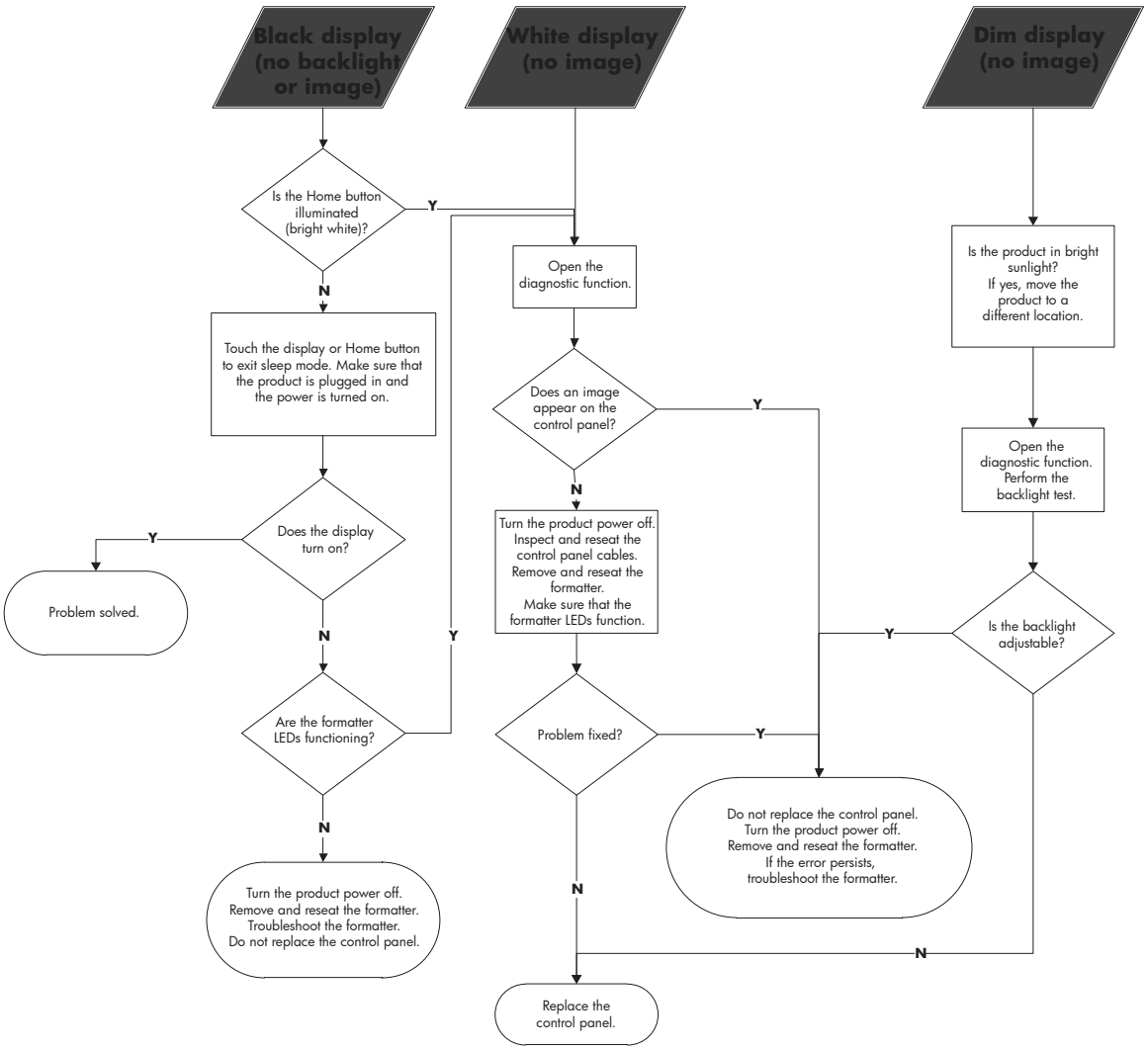

Touchscreen is slow to respond or requires multiple presses to respond

TIP: Use the red-grid touch test to verify that all areas of the touchscreen are correctly functioning. See Table 2-8 Control-panel diagnostic functions on page 141.

Figure 2-2 Touchscreen is slow to respond or requires multiple presses to respond

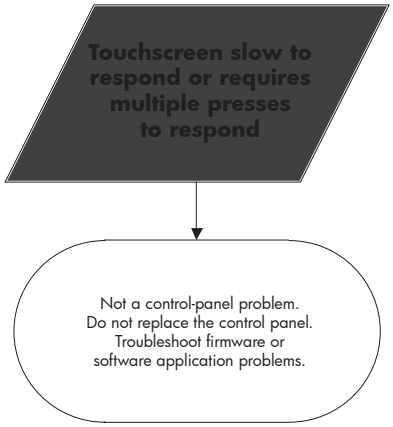

Touchscreen has an unresponsive zone

Figure 2-3 Touchscreen has an unresponsive zone

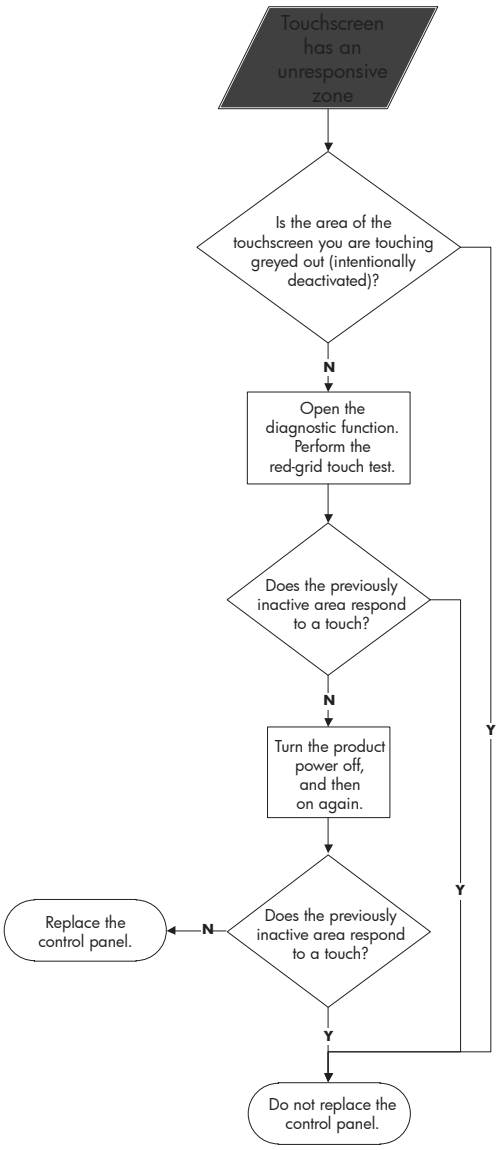

No control-panel sound

Figure 2-4 No control-panel sound

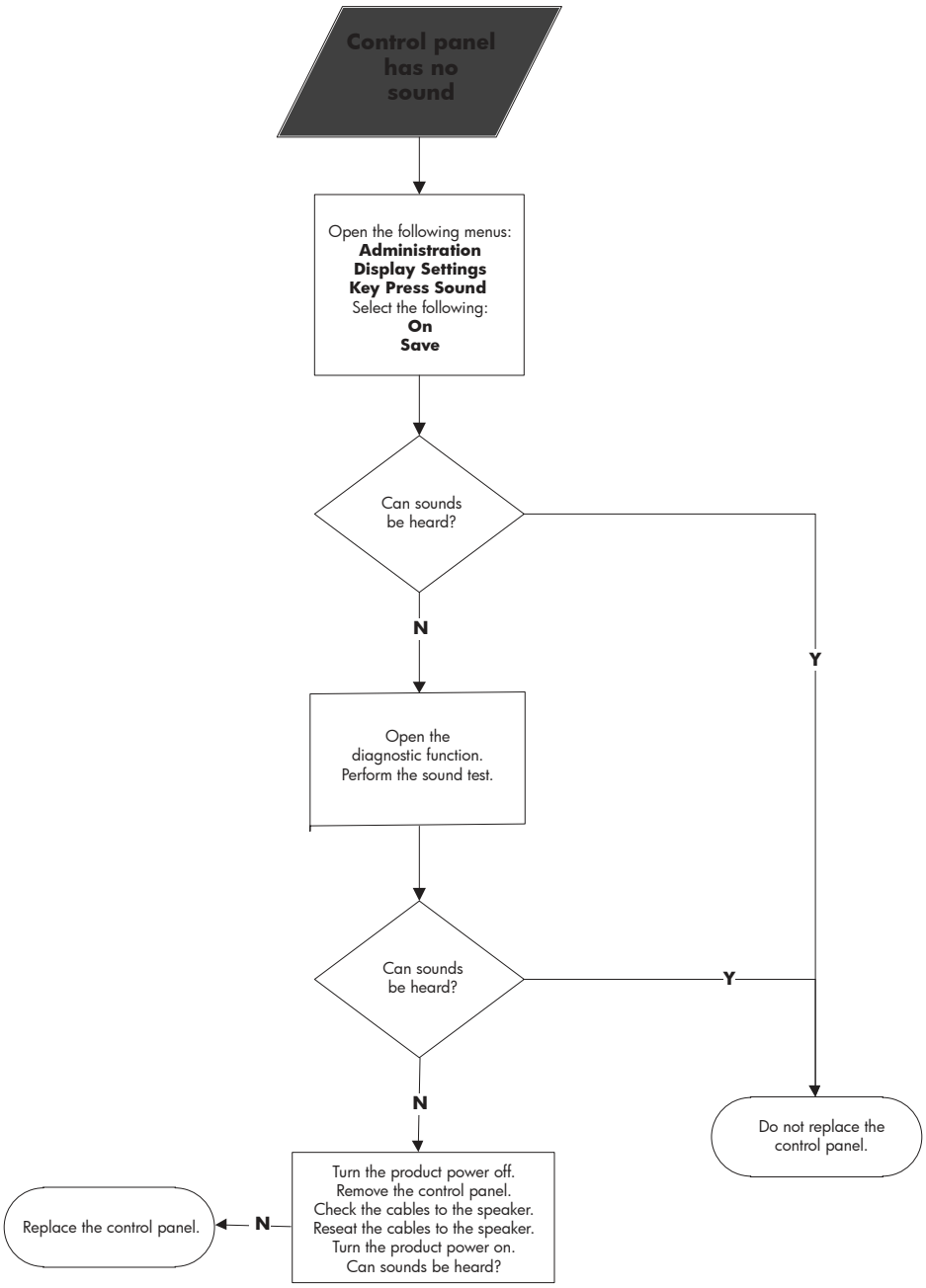

Home button is unresponsive

Figure 2-5 Home button is unresponsive

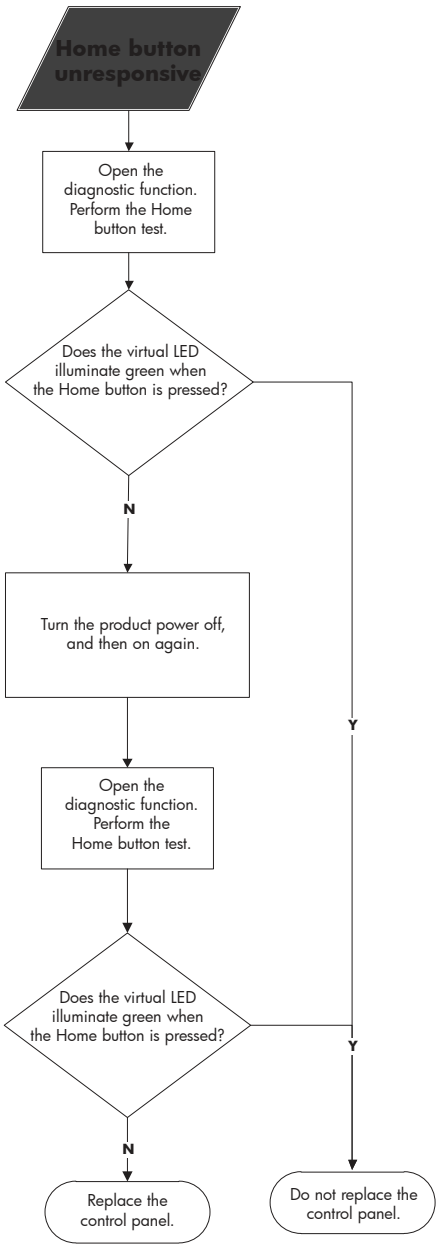

Hardware integration pocket (HIP) is not functioning (control panel functional)

Figure 2-6 Hardware integration pocket (HIP) is not functioning (control panel functional)

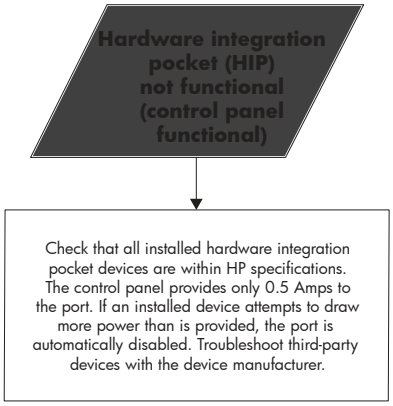

Scanning subsystem

Calibrate the scanner

Use this procedure to properly position the copied image on the page.

TIP: This adjustment might be required after the scanner or document feeder is replaced.

1. From the Home screen on the product control panel, scroll to and touch the Device Maintenance button.
2. Touch the Calibration/Cleaning button.
3. Touch the Calibrate Scanner button, and then follow the instructions provided on the screen.

Tools for troubleshooting

The section describes the tools that can help you solve problems with your product.

HP recommends that you provide enough space around the product to ensure that there is sufficient space to open doors and covers, provide proper ventilation, and for service personell to remove covers and internal assemblies.

Table 2-9 Product environment spacing

Item	Recommended spacing
From the left-side or right-side of the product, input accessory, or finishing accessory to an obstruction	430 mm (17 in) to 760 mm (30 in)
From the front-side of the product, input accessory, or finishing accessory to an obstruction	610 mm (24 in) to 1010 mm (40 in)
From the back-side of the product, input accessory, or finishing accessory to an obstruction	460 mm (18 in) to 760 mm (30 in)

Individual component diagnostics

LED diagnostics

LED, engine, and individual diagnostics can identify and troubleshoot product problems.

Understand lights on the formatter

Three LEDs on the formatter indicate that the product is functioning correctly.

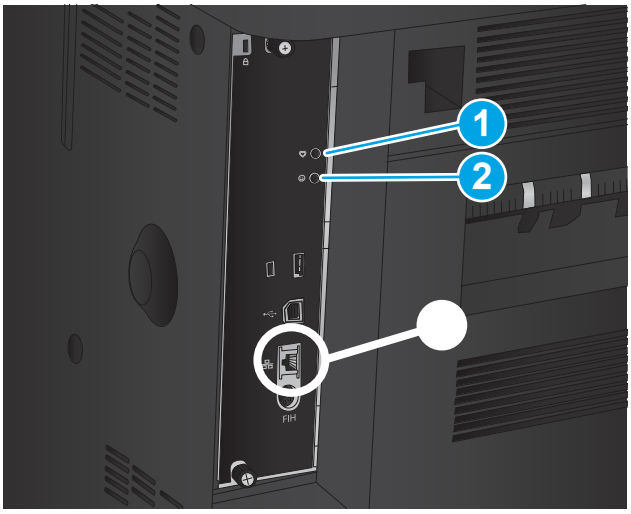

1	Connectivity LED
2	Heartbeat LED
3	HP Jetdirect LEDs

Heartbeat LED

The heartbeat LED provides information about product operation. If a product error occurs, the formatter displays a message on the control-panel display. However, error situations can occur causing the formatter-to-control panel communication to be interrupted.

NOTE: HP recommends fully troubleshooting the formatter and control panel before replacing either assembly. Use the heartbeat LED to troubleshoot formatter and control panel errors to avoid unnecessarily replacing these assemblies.

Formatter-to-control panel communication interruptions

- The firmware does not fully initialize and configure the control panel interface.
- The control panel is not functioning (either a failed assembly or power problem).
- Interface cabling between the formatter and control panel is damaged or disconnected.

TIP: If the heartbeat LED is illuminated—by an error condition or normal operation—the formatter is fully seated and the power is on. The pins for the LED circuit in the formatter connector are recessed so that this LED will not illuminate unless the formatter is fully seated.

The heartbeat LED operates according to the product state. When the product is initializing, see Heartbeat LED, product initialization on page 152. When the product is in **Ready** mode, see Heartbeat LED, product operational on page 155.

Heartbeat LED, product initialization

The following table describes the heartbeat LED operation while the product is executing the firmware boot process.

NOTE: When the initialization process completes, the heartbeat LED should be illuminated solid green.

If after initialization, the heartbeat LED is not solid green, see Heartbeat LED, product operational on page 155.

Table 2-10 **Heartbeat LED, product initialization**

Product initializing state	Heartbeat LED, normal state	Heartbeat LED, error state
No power (power cable disconnected or power switch off)	Off	Not applicable
Power on (immediately after the power switch pressed)	Red, solid • Duration should be 1 second or less	Red, solid • Firmware error: problem finding hardware and booting the serial peripheral interface flash memory ◦ Boot process halted Replace the formatter.
Serial peripheral interface (SPI) flash memory boot	Green, solid	Red, solid • Firmware error; problem corrupt or missing SPI flash memory

Table 2-10 Heartbeat LED, product initialization (continued)

Product initializing state	Heartbeat LED, normal state	Heartbeat LED, error state
		◦ Boot process halted Replace the formatter.
HW checks on board DRAM	Green, solid	Red, solid ● Power on self check failure ◦ Boot process halted Replace the formatter.
Control panel connection initializes	Green, solid NOTE: Control panel communication successful. If an error occurs, a message should appear on the control-panel display.	Yellow, fast flash ● Formatter to control panel connection failed ◦ Boot process continues Check the cables between the formatter and control panel for damage. Make sure that the cables are fully seated.
Preboot menu available (including diagnostics)	Green, solid	Red, solid ● Diagnostic failure ◦ Follow diagnostic instructions Turn the power off, and then on again to restart the initialization process.
Accessing disk for firmware image	Green, solid NOTE: If applicable, disk error messages appear on the control-panel display.	Yellow, fast flash ● Control panel not connected
Firmware boot	Green, solid NOTE: If applicable, error messages appear on the control-panel display.	Yellow, fast flash ● Control panel not connected
Product operational	Green, heartbeat blink NOTE: If applicable, error messages appear on the control-panel display.	Yellow, fast flash ● Control panel not connected
49.XX.YY error or initialization freezes	Not applicable	LED off NOTE: An error message (for example, 49.XX.YY) might appear on the control-panel display. Eventually a formatter connection missing message will appear. Turn the power off, and then on again to restart the initialization process. If the error persists, perform a firmware upgrade.

Table 2-10 Heartbeat LED, product initialization (continued)

Product initializing state	Heartbeat LED, normal state	Heartbeat LED, error state
Control panel connection interrupted after the product is operational	Not applicable	Yellow, fast flash • Control panel not connected
Sleep Mode	Green, slow blink	Not applicable
Approaching Sleep Mode	Green, slow blink	Not applicable
Wake up from Sleep Mode	Follows initialization progression	Follows initialization progression
Approaching wake up from Sleep Mode	Follows initialization progression	Follows initialization progression

Heartbeat LED, product operational

The following table describes the heartbeat operation when the product completes the firmware boot process and is in the **Ready** state.

Table 2-11 **Heartbeat LED, product operational**

LED color	Description
Green	• Normal operation ◦ Formatter is operating normally ◦ Firmware is operating normally ◦ Control panel is connected
Yellow	• Formatter cannot connect to the control panel ◦ Check control panel connections ◦ Verify control panel functionality
Red	• Formatter error or failure ◦ Serial peripheral interface (SPI) flash memory boot error ◦ Power on self test (formatter) failed ◦ Diagnostic (formatter) failed
Off	TIP: The connectivity LED is off if the power cable is disconnected, the product power switch is in the off position, or the product is in Sleep Mode. • Firmware or system freeze ◦ Check control panel for an error message ◦ Control panel failure NOTE: This condition is not usually caused by a formatter failure. Turn the power off, and then on again. If the error persists, perform a firmware upgrade.

Connectivity LED

The connectivity LED indicates that the formatter is functioning correctly. While the product is initializing after you turn it on, the LED blinks rapidly, and then turns off. When the product has finished the initialization sequence, the connectivity LED pulses on and off.

HP Jetdirect LEDs

The embedded HP Jetdirect print server has two LEDs. The yellow LED indicates network activity, and the green LED indicates the link status. A blinking yellow LED indicates network traffic. If the green LED is off, a link has failed.

For link failures, check all the network cable connections. In addition, you can try to manually configure the link settings on the embedded print server by using the product control-panel menus.

1. From the Home screen on the product control panel, scroll to and touch the Administration button.
2. Open the following menus:

- Network Settings
- Embedded Jetdirect Menu
- Link Speed

3. Select the appropriate link speed, and then touch the OK button.

Engine diagnostics

The product contains extensive internal engine diagnostics that help in troubleshooting print quality, paper path, noise, assembly, and timing issues.

Defeating interlocks

Different tests can be used to isolate different types of issues. For assembly or noise isolation, you can run the diagnostic test when the front and upper-right doors are open. To operate the product with the doors open, the door switch levers must be depressed to simulate a closed-door position.

WARNING! Be careful when performing product diagnostics to avoid risk of injury. Only trained service personnel should open and run the diagnostics with the covers removed. Never touch any of the power supplies when the product is turned on.

1. Open the right and front doors.
2. Insert a folded piece of paper into the upper-right-door sensor slot (callout 1).

NOTE: The paper must be thick enough to depress and hold in place the sensor actuator arm.

Figure 2-7 Defeating interlocks (1 of 2)

3. Insert a folded piece of paper into the front door switch (callout 1). Wait until the product enters the **Ready** state.

NOTE: The paper must be thick enough to depress and hold in place the sensor actuator arm.

Figure 2-8 Defeating interlocks (2 of 2)

Disable cartridge check

Use this diagnostic test to print internal pages or send an external job to the product when the toner cartridge is removed or exchanged. Supply errors are ignored while the product is in this mode. When the product is in this mode, you can navigate the troubleshooting menus and print internal pages (the print quality pages will be the most useful). This test can be used to isolate problems, such as noise, and to isolate print-quality problems that are related to the toner cartridge.

NOTE: Do not remove or exchange a toner cartridge until after you start the disable cartridge check diagnostic.

1. From the Home screen on the product control panel, scroll to and touch the Administration button.
2. Open the following menus:
   - Troubleshooting
   - Diagnostic Tests
   - Disable Cartridge Check

Engine test button

To verify that the product engine is functioning, print an engine test page. Use a small pointed object to depress the test-page switch located on the rear of the product. The test page should have a series of horizontal lines. The test page can use only Tray 2 as the paper source, so make sure that paper is loaded in Tray 2.

NOTE: The engine test button is located on the right side of the product, near the upper right-hand corner of the right door.

Figure 2-9 Engine test button

Paper path test

This diagnostic test generates one or more test pages that you can use to isolate the cause of jams.

To isolate a problem, specify which input tray to use, specify whether to use the duplex path, and specify the number of copies to print. Multiple copies can be printed to help isolate intermittent problems. The following options become available after you start the diagnostic feature:

- Print Test Page: Run the paper-path test from the default settings: Tray 2, no duplex, and one copy. To specify other settings, scroll down the menu, and select the setting, and then scroll back up and select Print Test Page to start the test.
- Source Tray: Select Tray 1, Tray 2, or the optional tray.
- Test Duplex Path: Enable or disable two-sided printing.
- Number of Copies: Set the numbers of copies to be printed; the choices are 1,10, 50, 100, or 500.

1. From the Home screen on the product control panel, scroll to and touch the Administration button.
2. Open the following menus:

- Troubleshooting
- Diagnostic Tests
- Paper Path Test

3. Select the paper-path test options for the test you want to run.

Paper path sensors test

This test displays the status of each paper-path sensor and allows viewing of sensor status while printing internal pages.

1. From the Home screen on the product control panel, scroll to and touch the Administration button.
2. Open the following menus:
   - Troubleshooting
   - Diagnostic Tests
   - Paper Path Sensors

NOTE: Exiting the Paper path sensors menu and then reentering the test will clear the test values from the previous test.

The menu list of sensors and motors for the Paper path sensors test varies depending on which optional accessories are installed.

Table 2-12 Paper-path sensors diagnostic tests

Sensor name	Sensor/Switch number	Replacement part number	Descriptions	Sensor test name
Tray 5 feed sensor	PS3305			Paper Path Test
HCI feed sensor	PS3301		Crossing paper feed assembly	Paper Path Test
Tray 4 feed sensor	PS3302			Paper Path Test
Tray 3 feed sensor	PS1403/4			Paper Path Test
Tray 2 feed sensor	PS1401/2			Paper Path Test
Tray 1 feed sensor	PS2502			Paper Path Test
TOP sensor	PS4			Paper Path Test
Paper Width Sensor 1	PS1/2/3			Paper Path Test
Fuser loop 1 sensor	PS9		Fuser drive assembly	Paper Path Test
Fuser output sensor	PS502		Fuser assembly	Paper Path Test
Duplex switching sensor	PS2002/3			Paper Path Test
Duplex refeed sensor	PS2004/5			Paper Path Test
Output sensor	PS1451			Paper Path Test

Table 2-12 Paper-path sensors diagnostic tests (continued)

Sensor name	Sensor/Switch number	Replacement part number	Descriptions	Sensor test name
Output bin full sensor	PS1452			Paper Path Test
PPCA sensor	PS3307			Paper Path Test

Manual sensor and tray/bin manual sensor tests

Use these diagnostic tests to manually test the product sensors and switches.

Manual sensor test

The table in this section lists the sensors and switches available in the Manual Sensor Test.

Use the manual sensor test

The Manual Sensor Test screen shows the sensor number, sensor name, sensor state (active or inactive), and the number of times the sensor has been toggled (activated).

1. From the Home screen on the product control panel, scroll to and touch the Administration button.
2. Open the following menus:
   - Troubleshooting
   - Diagnostic Tests
   - Manual Sensor Test
3. Touch the sensor number and name on the Manual Sensor Test screen to display a sensor location graphic on the control-panel display.
4. Activate the desired sensor, and then check the control-panel display to verify the sensor state (active or inactive).
   - The State virtual LED next to the sensor number and sensor name illuminates green when the sensor is active.
   - The Toggle virtual LED next to the sensor number and sensor name illuminates green after the sensor is activated and increments by one each time the sensor is interrupted (activated or deactivated).

     For example, opening the front door increments the PS14 Front door Toggle item count two times—once when the door is opened, and once when the door is closed.
5. Touch the Reset Sensors button to reset the Toggle count item.

   -or-

   Touch the Cancel button to exit the Manual Sensor Test screen and return to the Diagnostic Tests menu.

Table 2-13 Manual sensor diagnostic tests

Sensor or switch	Replacement Part number	Description
SW8 Front door open/closed		Switch, cable
SW6 Left door open/closed		Switch, cable
SW7 Right door open/closed		Switch, cable
PS3305 Tray 5 feed sensor		Paper pickup assembly
PS3301 HCI feed sensor		Crossing paper feed assembly
PS3302 Tray 4 feed sensor		Paper pickup assembly
PS1403/4 Tray 3 feed sensor		Paper pickup assembly
PS1401/2 Tray 2 feed sensor		Paper pickup assembly
PS2502 Tray 1 feed sensor		Paper pickup assembly
PS4 TOP sensor		Registration sensor assembly
PS1/2/3 Paper Width Sensor		
PS9 Fuser loop 1 sensor		Fuser
PS502 Fuser output sensor		Fuser
PS2002/3 Duplex switchback sensor		Duplexer
PS2004/5 Duplex refeed sensor		Duplexer
PS1451 Output sensor		Fuser drive assembly
PS1452 Output bin full		Fuser drive assembly
PS3307 PPCA sensor		Photointerrupter

Tray/bin manual sensor test

The table in this section lists the sensors and switches available in the Tray/Bin Manual Sensor Test.

Use the tray/bin manual sensor test

The Tray/Bin Manual Sensor Test screen shows the sensor number, sensor name, sensor state (active or inactive), and the number of times the sensor has been toggled (activated).

1. From the Home screen on the product control panel, scroll to and touch the Administration button.
2. Open the following menus:
   - Troubleshooting
   - Diagnostic Tests
   - Tray/Bin Manual Sensor Test
3. Touch the sensor number and name on the Tray/Bin Manual Sensor Test screen to display a sensor location graphic on the control-panel display.

4. Activate the desired sensor, and then check the control-panel display to verify the sensor state (active or inactive).

   - The State virtual LED next to the sensor number and sensor name illuminates green when the sensor is active.
   - The Toggle virtual LED next to the sensor number and sensor name illuminates green after the sensor is activated and increments by one each time the sensor is interrupted (activated or deactivated).

     For example, opening Tray 2 increments the SW7,8 Tray 2 Paper Size Toggle item count two times—once when the tray is opened, and once when the tray is closed.

5. Touch the Reset Sensors button to reset the Toggle count item.

   -or-

   Touch the Cancel button to exit the Manual Sensor Test screen and return to the Diagnostic Tests menu.

Table 2-14 Tray/bin manual sensors

Sensor or switch name	Replacement part number	Descriptions
PS2501 Tray 1 paper sensor		Last paper detect sensor
PS2502 Tray 1 feed sensor		Paper pickup assembly
PS1410 Tray 2 paper sensor		Paper pickup assembly
PS1409 Tray 2 paper surface		Paper pickup assembly
SW2/3 Tray 2 paper size		Paper pickup assembly
PS1401/2/PS8 Tray 2 feed sensor		Paper pickup assembly
PS1412 Tray 3 paper sensor		Paper pickup assembly
PS1411 Tray 3 paper surface		Paper pickup assembly
SW4/5 Tray 3 paper size		Paper pickup assembly
PS1403/4 Tray 3 feed sensor		Paper pickup assembly
PS3103 Tray 4 paper sensor		Paper pickup assembly
PS3102 Tray 4 paper surface		Paper pickup assembly
PS3303 Tray 4 paper size		Paper pickup assembly
PS3302 Tray 4 paper feed sensor		Paper pickup assembly
SW3302 Tray 4 cassette operation		
SW3301 Lower right door 1		Switch, cable
PS3306 Lower right door 2		Switch, cable
PS3301 HCI feed sensor		Crossing paper feed assembly
PS3308 Tray 5 paper sensor		Paper pickup assembly
PS3302 Tray 5 paper surface		Paper pickup assembly
PS3304 Tray 5 paper size		Paper pickup assembly

Table 2-14 Tray/bin manual sensors (continued)

Sensor or switch name	Replacement part number	Descriptions
PS3305 Tray 5 feed sensor		Paper pickup assembly
SW3303 Tray 5 cassette operation		
PS1452 Output bin full		Fuser drive assembly

Print/stop test

Use this diagnostic test to isolate the cause of problems such as image-formation defects and jams within the engine. During this test you can stop the paper anywhere along the product paper path. The test can be programmed to stop printing internal pages or an external print job when the paper reaches a certain position. The test can also be programmed to stop from 0 to 60,000 ms. If the timer is set to a value that is greater than the job-print time, you can recover the product in one of two ways.

1. From the Home screen on the product control panel, scroll to and touch the Administration button.
2. Open the following menus:
   - Troubleshooting
   - Diagnostic Tests
   - Print/Stop Test
3. Enter a range, and then touch the OK button.

- After the print job is completed press OK button to return to the Troubleshooting menu before the timer times out.
- After the timer times out, touch the Stop button. Activate the door switch to restart the engine and return it to a normal state.

NOTE: If a jam message displays on the control panel during testing, activate the door switch.

Component tests

Control-panel tests

From the Home screen on the product control panel, scroll to and touch the Administration button.

- Troubleshooting
- Diagnostic Tests

Available control-panel tests

- LEDs: test the LEDs on the control panel.
- Display: sequence through display tests.

- Buttons: tests the keypad and other control-panel buttons.
- Touchscreen: tests the control-panel touchscreen.

For control-panel diagnostics, see Control-panel checks in the product troubleshooting service manual.

Component test (special-mode test)

This test activates individual parts independently to isolate problems.

Each component test can be performed once or repeatedly. If you turn on the Repeat option from the drop-down menu, the test cycles the component on and off. This process continues for two minutes, and then the test terminates.

NOTE: The front or side door interlocks must be defeated to run the component tests. Some tests might require that the ITB and toner cartridges be removed. The control panel-display prompts you to remove some or all cartridges during certain tests.

1. From the Home screen on the product control panel, scroll to and touch the Administration button.
2. Open the following menus:
   - Troubleshooting
   - Diagnostic Tests
   - Component Test
3. Select the component test options for the test you want to run.

Table 2-15 Component test details

Component test	Item tested	Replacement part number	Comments
Drum Motor	DCM2	RM1-9784-000CN Drum drive assembly	Activates the specified motor at a specific speed for 10 seconds.
Fuser Motor	DCM1	RM1-9788-000CN Fuser drive assembly	Remove the toner cartridge to perform this test. Activates the specified motor at a specific speed for 10 seconds.
Tray 1 feed motor	M3	DC motor assembly	Activates the specified motor at a specific speed for 10 seconds.
Tray 3 and tray 2 pick motor		DC motor assemblies	Activates the specified motor at a specific speed for 10 seconds.
Tray 2 feed motor	M2	DC motor assembly	Activates the specified motor at a specific speed for 10 seconds.
Tray 3 feed motor	M3	DC motor assembly	Activates the specified motor at a specific speed for 10 seconds.
Tray 2 intermediate feed motor		DC motor assembly	Activates the specified motor at a specific speed for 10 seconds.

Table 2-15 Component test details (continued)

Component test	Item tested	Replacement part number	Comments
Tray 3 intermediate feed motor		DC motor assembly	Activates the specified motor at a specific speed for 10 seconds.
Tray 5 and tray 4 intermediate feed motor		DC motor assembly	Activates the specified motor at a specific speed for 10 seconds.
Tray 4 feed motor		DC motor assembly	Activates the specified motor at a specific speed for 10 seconds.
Tray 5 feed motor		DC motor assembly	Activates the specified motor at a specific speed for 10 seconds.
Switchback motor	STM2002	DC motor assembly	Activates the specified motor at a specific speed for 10 seconds.
Duplex Feed Motor	STM2003		Activates the specified motor at a specific speed for 10 seconds.
Duplex Refeed Motor	STM2004		Activates the specified solenoid for 10 seconds.
Duplex side registration motor	STM2001		Activates the specified solenoid for 10 seconds.
Fuse shutter motor	M1	DC motor assembly	Activates the specified solenoid for 10 seconds.
Tray 1 Pickup Solenoid	SL2501		Activates the specified solenoid for 10 seconds.
Tray 1 feed clutch	CL2501		Activates the specified clutch for 10 seconds.
Tray 4 Pickup Solenoid			Activates the specified solenoid for 10 seconds.
Tray 5 Pickup Solenoid			Activates the specified solenoid for 10 seconds.
Switchback Flapper Solenoid			Activates the specified solenoid for 10 seconds.
Laser Scanner Motor	M4	DC motor assembly	Activates the specified motor at a specific speed for 10 seconds.
Repeat	Not applicable	Not applicable	Options: On Off

Finishing accessory component test

Use the procedures in this section to diagnose problems with the finishing accessories. During the test, the finishing accessory is isolated and does not communicate with the product engine.

IMPORTANT: Before you configure the dual-inline-package switches (DIPSW) on a PCA to perform a test, you must turn the power off. You do not have to turn the power off again before changing the DIPSW settings to perform other tests—as long as the subsequent tests are performed using the same DIPSW.

However, if subsequent tests involve setting a different DIPSW on a different PCA other than the one used to perform the first test, you must turn the product power off before changing the DIPSW settings.

For example:

1. Turn the product power off.
2. Set DPSW4 on the *main controller PCA*.
3. Perform the test.
4. Turn the product power off.
5. Set DPSW on the *punch controller PCA*.
6. Perform the test.

Access the finishing accessory controller PCAs

Access the main controller PCA

CAUTION: ESD sensitive component.

For specific instructions about removing the following covers to access the main controller PCA, see the product repair manual.

1. Remove the following assemblies:
   - Bin cable cover
   - Open/closed stepped cover
   - Upper stepped cover
   - Lower stepped cover
   - Rear cover
2. Locate the following controller PCA switches:
   - SW3 (callout 1)
   - DIPSW4 (callout 2)

   NOTE: The DIPSW4 has eight electronic switches that can be set to either the ON or OFF position. The controller PCA is marked ON and OFF to show the current switch position.

   For normal operation of the finishing accessory, all of the DIPSW4 switches must be in the OFF position. Always return the DIPSW4 switches to the factory setting when you are finished testing an accessory.

   Figure 2-10 Finishing controller PCA switches

Access the saddle controller PCA

CAUTION: ESD sensitive component.

For specific instructions about removing the following covers to access the saddle controller PCA, see the product repair manual.

1. Remove the following assemblies:
   - Rear cover
   - Rear cover (BM PCA)
2. Locate the following controller PCA switches:
   - SW1 (callout 1)
   - DIPSW (callout 2)

   NOTE: The DIPSW has eight electronic switches that can be set to either the ON or OFF position. The DIPSW is marked ON to show the current switch position.

   For normal operation of the finishing accessory, all of the DIPSW switches must be in the OFF position. Always return the DIPSW switches to the factory setting when you are finished testing an accessory.

   Figure 2-11 Booklet maker (BM) saddle controller PCA switches

Access the punch controller PCA

CAUTION: ESD sensitive component.

For specific instructions about removing the following covers to access the saddle controller PCA, see the product repair manual.

1. Remove the following assemblies:

- Bin cable cover
- Open/closed stepped cover
- Upper stepped cover
- Lower stepped cover
- Rear cover

2. Locate the following controller PCA switches and LEDs:
   - SW602 (callout 1)
   - SW603 (callout 2)
   - LED601 and LED602 (callout 3)
   - DIPSW (callout 4)

   NOTE: The DIPSW has four electronic switches that can be set to either the ON or OFF position. The DIPSW is marked ON to show the current switch position.

   For normal operation of the finishing accessory, all of the DIPSW switches must be in the OFF position. Always return the DIPSW switches to the factory setting when you are finished testing an accessory.

   Figure 2-12 Stapler/stacker with hole punch (SSHP) punch controller PCA switches

Finishing accessory function tests

Use the procedures in this section to diagnose problems with the stapler/stacker (SS), stapler/stacker with hole punch (SSHP), or booklet maker (BM) assemblies.

- Pre-alignment plate motor test
- Post-alignment plate motor test
- Swing guide motor test
- Staple subassembly to staple position test
- Staple sub assembly motor test
- Stacker entrance motor test
- Stapled job output motor test
- Trailing edge assist motor test
- Stacker solenoid test
- Stacker clutch test
- Shutter assembly test
- First tray test (upper stack output bin)
- Secondary tray test (lower stack output bin)
- Saddle entrance motor or punch feed roller motor test
- Returning roller test
- Switchback motor test
- Registration motor test
- Switchback inlet flapper solenoid test
- Switchback roller alienation solenoid test
- Saddle solenoid test
- Saddle (booklet) feed motor test
- Paper folding motor test
- Jogger plate motor test
- Saddle (booklet) aging test
- Saddle (booklet) alignment plate test
- Paper position plate test
- Guide plate test
- Punch aging test
- Punch side registration test

- Punch motor test

Pre-alignment plate motor test

1. Do one of the following:
   - If this is the first test you are performing, turn the product power off, remove all paper, and then make sure that all doors and trays are closed.
   - If you are continuing from a previous main controller PCA test, go to step 2.
2. On the main controller PCA, set DIPSW4 to the following settings:
   - Switch 1 ON
   - Switch 2 through switch 8 OFF
3. Turn the product power on.
4. On the main controller PCA, press and release SW3, and then observe the following:
   - **First press of SW3**: The pre-alignment plate moves to the home position—unless it is already in the home position.
   - **Second press of SW3**: The pre-alignment plate moves to the A4 landscape position—if it was in the home position.
   - **Third press of SW3**: The pre-alignment plate moves from to the A4 portrait position—if it was in the A4 landscape position.

   NOTE: Press and hold down SW3 to continuously move the pre-alignment plate from position to position.
5. If the pre-alignment plate correctly functions, press and release SW3 until the plate is in the home position.
6. Turn the product power off, and then return all of the DIPSW4 switches to the OFF setting.

   TIP: If you are going to perform another test, skip this step and go to the next test—make sure that the pre-alignment plate is in the home position before continuing.
7. If the pre-alignment plate fails the test, replace the defective assembly.

Post-alignment plate motor test

1. Do one of the following:
   - If this is the first test you are performing, turn the product power off, remove all paper, and then make sure that all doors and trays are closed.
   - If you are continuing from a previous main controller PCA test, go to step 2.
2. On the main controller PCA, set DIPSW4 to the following settings:
   - Switch 1 ON
   - Switch 2 through switch 7 OFF
   - Switch 8 ON
3. Turn the product power on.
4. On the controller PCA, press and release SW3, and then observe the following:
   - **First press of SW3**: The post-alignment plate moves to the home position—unless it is already in the home position.
   - **Second press of SW3**: The post-alignment plate moves to the A4 landscape position—if it was in the home position.
   - **Third press of SW3**: The post-alignment plate moves from to the A4 portrait position—if it was in the A4 landscape position.

   NOTE: Press and hold down SW3 to continuously move the post-alignment plate from position to position.
5. If the post-alignment plate correctly functions, press and release SW3 until the plate is in the home position.
6. Turn the product power off, and then return all of the DIPSW4 switches to the OFF setting.

   TIP: If you are going to perform another test, skip this step and skip this step and go to the next test—make sure that the post-alignment plate is in the home position before continuing.
7. If the post-alignment plate fails the test, replace the defective assembly.

Swing guide motor test

1. Do one of the following:
   - If this is the first test you are performing, turn the product power off, remove all paper, and then make sure that all doors and trays are closed.
   - If you are continuing from a previous main controller PCA test, go to step 2.
2. On the main controller PCA, set DIPSW4 to the following settings:
   - Switch 1 ON
   - Switch 2 through switch 6 OFF
   - Switch 7 ON
   - Switch 8 OFF
3. Turn the product power on.
4. On the controller PCA, press and release SW3, and then observe the following:
   - **First press of SW3**: The swing guide moves to the close position—unless it is already in the close position.
   - **Second press of SW3**: The swing guide moves to the open position—unless it is already in the open position.

   NOTE: Press and hold down SW3 to continuously move the swing guide from position to position.
5. If the swing guide correctly functions, press and release SW3 until the swing guide is in the close position.
6. Turn the product power off, and then return all of the DIPSW4 switches to the OFF setting.

   TIP: If you are going to perform another test, skip this step and skip this step and go to the next test—make sure that the swing guide is in the close position before continuing.
7. If the swing guide fails the test, replace the defective assembly.

Staple subassembly to staple position test

1. Do one of the following:
   - If this is the first test you are performing, turn the product power off, remove all paper, and then make sure that all doors and trays are closed.
   - If you are continuing from a previous main controller PCA test, go to step 2.
2. On the main controller PCA, set DIPSW4 to the following settings:
   - Switch 1 ON
   - Switch 2 through switch 6 OFF
   - Switch 7 and switch 8 ON
3. Locate the staple subassembly.

   NOTE: For clarity, the figure below shows the inner upper cover removed. This cover does not need to be removed to perform this test.

4. Turn the product power on.
5. On the controller PCA, press and release SW3, and then observe the following:
   - **First press of SW3**: The staple sub assembly moves to the home position—unless it is already in the home position (as shown in the figure above).
   - **Second press of SW3**: The staple sub assembly moves to the rear position—unless it is already in the rear position.

   NOTE: Press and hold down SW3 to continuously move the staple sub assembly from position to position.

6. If the staple sub assembly correctly functions, press and release SW3 until the staple sub assembly is in the home position.

7. Turn the product power off, and then return all of the DIPSW4 switches to the OFF setting.

TIP: If you are going to perform another test, skip this step and go to the next test—make sure that the staple sub assembly is in the home position before continuing.

8. If the staple sub assembly fails the test, replace the staple assembly—this is the plate that the staple sub assembly is mounted on.

Staple sub assembly motor test

1. Do one of the following:
   - If this is the first test you are performing, turn the product power off, remove all paper, and then make sure that all doors and trays are closed.
   - If you are continuing from a previous main controller PCA test, go to step 2.
2. On the main controller PCA, set DIPSW4 to the following settings:
   - Switch 1 ON
   - Switch 2 through switch 5 OFF
   - Switch 6 ON
   - Switch 7 and switch 8 OFF
3. Remove the staple cartridge from the staple subassembly.
4. Turn the product power on.
5. On the controller PCA, press and release SW3, and then observe the following:
   - **First press of SW3**: The staple sub assembly clinches a staple.

   NOTE: Press and hold down SW3 to cause the staple sub assembly to continuously clinch the staple.
6. Reinstall the staple cartridge from the staple sub assembly.
7. Turn the product power off, and then return all of the DIPSW4 switches to the OFF setting.

   TIP: If you are going to perform another test, skip this step and go to the next test.
8. If the staple sub assembly motor fails the test, replace the staple sub assembly.

Stacker entrance motor test

1. Do one of the following:
   - If this is the first test you are performing, turn the product power off, remove all paper, and then make sure that all doors and trays are closed.
   - If you are continuing from a previous main controller PCA test, go to step 2.
2. On the main controller PCA, set DIPSW4 to the following settings:
   - Switch 1 ON
   - Switch 2 through switch 5 OFF
   - Switch 6 ON
   - Switch 7 OFF
   - Switch 8 ON
3. Turn the product power on.
4. On the controller PCA, press and release SW3, and then observe the following:
   - **First press of SW3**: The stacker entrance guide motor rotates—listen for the motor to rotate.
   - **Second press of SW3**: The stacker entrance guide motor stops.

   NOTE: Press and hold down SW3 to cause the stacker entrance guide motor to repeatedly rotate and then stop.
5. Turn the product power off, and then return all of the DIPSW4 switches to the OFF setting.

   TIP: If you are going to perform another test, skip this step and go to the next test—make sure that the stacker entrance guide motor is stopped before continuing.
6. If the stacker entrance guide motor fails the test, replace the defective assembly.

Stapled job output motor test

1. Do one of the following:
   - If this is the first test you are performing, turn the product power off, remove all paper, and then make sure that all doors and trays are closed.
   - If you are continuing from a previous main controller PCA test, go to step 2.
2. On the main controller PCA, set DIPSW4 to the following settings:
   - Switch 1 ON
   - Switch 2 through switch 4 OFF
   - Switch 5 ON
   - Switch 6 and switch 7 OFF
   - Switch 8 ON
3. Turn the product power on.
4. On the controller PCA, press and release SW3, and then observe the following:
   - **First press of SW3**: The stapled job output motor rotates—listen for the motor to rotate.
   - **Second press of SW3**: The stapled job output motor stops.

   NOTE: Press and hold down SW3 to cause the stapled job output motor to repeatedly rotate and then stop.
5. Turn the product power off, and then return all of the DIPSW4 switches to the OFF setting.

   TIP: If you are going to perform another test, skip this step and go to the next test—make sure that the stapled job output motor is stopped before continuing.
6. If the stapled job output motor fails the test, replace the defective assembly.

Trailing edge assist motor test

1. Do one of the following:
   - If this is the first test you are performing, turn the product power off, remove all paper, and then make sure that all doors and trays are closed.
   - If you are continuing from a previous main controller PCA test, go to step 2.
2. On the main controller PCA, set DIPSW4 to the following settings:
   - Switch 1 ON
   - Switch 2 through switch 4 OFF
   - Switch 5 ON
   - Switch 6 OFF
   - Switch 7 and switch 8 ON
3. Turn the product power on.
4. On the controller PCA, press and release SW3, and then observe the following:
   - **First press of SW3**: The trailing assist assembly moves to the home position—unless it is already in the home position.
   - **Second press of SW3**: The trailing assist assembly moves to the forward position—unless it is already in the forward position.

   NOTE: Press and hold down SW3 to continuously move the trailing assist assembly from position to position.
5. Turn the product power off, and then return all of the DIPSW4 switches to the OFF setting.

   TIP: If you are going to perform another test, skip this step and go to the next test—make sure that the trailing assist assembly is in the home position before continuing.
6. If the trailing assist motor fails the test, replace the defective assembly.

Stacker solenoid test

1. Do one of the following:
   - If this is the first test you are performing, turn the product power off, remove all paper, and then make sure that all doors and trays are closed.
   - If you are continuing from a previous main controller PCA test, go to step 2.
2. On the main controller PCA, set DIPSW4 to the following settings:
   - Switch 1 ON
   - Switch 2 through switch 4 OFF
   - Switch 5 and switch 6 ON
   - Switch 7 and switch 8 OFF
3. Turn the product power on.
4. On the controller PCA, press and release SW3, and then observe the following:
   - **First press of SW3**: The entrance roller alienation solenoid activates for 500ms (milliseconds), and then deactivates—listen for the solenoid to activate, and then deactivate.
   - **Second press of SW3**: The buffer roller alienation solenoid activates for 500ms, and then deactivates—listen for the solenoid to activate, and then deactivate.
   - **Third press of SW3**: The primary output roller alienation solenoid activates for 500ms, and then deactivates—listen for the solenoid to activate, and then deactivate.
   - **Fourth press of SW3**: The buffer trailing edge solenoid activates for 500ms, and then deactivates—listen for the solenoid to activate, and then deactivate.

   NOTE: Press and hold down SW3 to cause the solenoids to repeatedly activate, and then deactivate—in the order listed above.
5. Turn the product power off, and then return all of the DIPSW4 switches to the OFF setting.

   TIP: If you are going to perform another test, skip this step and go to the next test—make sure that the solenoids are deactivated before continuing.
6. If a solenoid fails the test, replace the appropriate solenoid.

Stacker clutch test

1. Do one of the following:
   - If this is the first test you are performing, turn the product power off, remove all paper, and then make sure that all doors and trays are closed.
   - If you are continuing from a previous main controller PCA test, go to step 2.
2. On the main controller PCA, set DIPSW4 to the following settings:
   - Switch 1 ON
   - Switch 2 through switch 4 OFF
   - Switch 5 and switch 6 ON
   - Switch 7 OFF
   - Switch 8 ON
3. Turn the product power on.
4. On the controller PCA, press and release SW3, and then observe the following:
   - **First press of SW3**: The lower stack ejection roller clutch activates for 500ms (milliseconds), and then deactivates—listen for the clutch to activate, and then deactivate.
   - **Second press of SW3**: The shutter open/close clutch activates for 500ms, and then deactivates—listen for the clutch to activate, and then deactivate.

   NOTE: Press and hold down SW3 to cause the clutches to repeatedly activate, and then deactivate—in the order listed above.
5. Turn the product power off, and then return all of the DIPSW4 switches to the OFF setting.

   TIP: If you are going to perform another test, skip this step and go to the next test—make sure that the clutches are deactivated before continuing.
6. If a clutch fails the test, replace the appropriate clutch.

Shutter assembly test

1. Do one of the following:
   - If this is the first test you are performing, turn the product power off, remove all paper, and then make sure that all doors and trays are closed.
   - If you are continuing from a previous main controller PCA test, go to step 2.
2. On the main controller PCA, set DIPSW4 to the following settings:
   - Switch 1 ON
   - Switch 2 through switch 4 OFF
   - Switch 5, switch 6, and switch 7 ON
   - Switch 8 OFF
3. Turn the product power on.
4. On the controller PCA, press and release SW3, and then observe the following:
   - **First press of SW3**: The shutter assembly moves to the home position—unless it is already in the home position.
   - **Second press of SW3**: The shutter assembly moves to the close position—unless it is already in the close position.

   NOTE: Press and hold down SW3 to continuously move the shutter assembly from position to position.
5. Turn the product power off, and then return all of the DIPSW4 switches to the OFF setting.

   TIP: If you are going to perform another test, skip this step and go to the next test—make sure that the shutter assembly is in the home position before continuing.
6. If the shutter assembly fails the test, replace the defective assembly.

First tray test (upper stack output bin)

1. Do one of the following:
   - If this is the first test you are performing, turn the product power off, remove all paper, and then make sure that all doors and trays are closed.
   - If you are continuing from a previous main controller PCA test, go to step 2.
2. On the main controller PCA, set DIPSW4 to the following settings:
   - Switch 1 ON
   - Switch 2 and switch 3 OFF
   - Switch 4 ON
   - Switch 5 through switch 8 OFF
3. Remove all paper from the stack upper and lower output bins.
4. Turn the product power on.
5. On the controller PCA, press and release SW3, and then observe the following:

   CAUTION: *Immediately* unplug the product power cord if you hear any abnormal sounds when the bins are moving.

   - **First press of SW3**: The stack upper and lower output bins move to the paper out position for the upper output bin position.
   - **Second press of SW3**: The stack upper output bin moves to the detecting bin surface position.

   NOTE: Press and hold down SW3 to repeat moving the stack upper output bin to the detecting bin surface position.

6. Turn the product power off, and then return all of the DIPSW4 switches to the OFF setting.

   TIP: If you are going to perform another test, skip this step and go to the next test—make sure that the bin has stopped moving before continuing.

7. If the stack upper bin fails the test, replace the upper stack output bin.

Secondary tray test (lower stack output bin)

1. Do one of the following:
   - If this is the first test you are performing, turn the product power off, remove all paper, and then make sure that all doors and trays are closed.
   - If you are continuing from a previous main controller PCA test, go to step 2.
2. On the main controller PCA, set DIPSW4 to the following settings:
   - Switch 1 ON
   - Switch 2 through switch 4 OFF
   - Switch 5, switch 6, switch 7, and switch 8 ON
3. Remove all paper from the stack upper and lower output bins.
4. Turn the product power on.
5. On the controller PCA, press and release SW3, and then observe the following:

   CAUTION: *Immediately* unplug the product power cord if you hear any abnormal sounds when the bins are moving.

   - **First press of SW3**: The stack upper and lower output bins move to the paper out position for the lower output bin position.
   - **Second press of SW3**: The stack lower output bin moves to the detecting bin surface position.

   NOTE: Press and hold down SW3 to repeat moving the stack lower output bin to the detecting bin surface position.

6. Turn the product power off, and then return all of the DIPSW4 switches to the OFF setting.

   TIP: If you are going to perform another test, skip this step and go to the next test—make sure that the bin has stopped moving before continuing.

7. If the stack lower output bin fails the test, replace the lower stack output bin.

Saddle entrance motor or punch feed roller motor test

NOTE: The name of this motor depends on the type of finishing accessory being tested. For the stapler/stacker with hole punch (SSHP), this is the punch feed roller motor. For the booklet maker (BM), this is the saddle entrance motor.

1. Do one of the following:
   - If this is the first test you are performing, turn the product power off, remove all paper, and then make sure that all doors and trays are closed.
   - If you are continuing from a previous main controller PCA test, go to step 2.
2. On the main controller PCA, set DIPSW4 to the following settings:
   - Switch 1 ON
   - Switch 2 and switch 3 OFF
   - Switch 4 ON
   - Switch 5 OFF
   - Switch 6 ON
   - Switch 7 and switch 8 OFF
3. Turn the product power on.
4. On the controller PCA, press and release SW3, and then observe the following:
   - **First press of SW3**: The saddle entrance motor or punch feed roller motor rotates—listen for the motor to rotate.
   - **Second press of SW3**: The saddle entrance motor or punch feed roller motor stops.

   NOTE: Press and hold down SW3 to cause the saddle entrance motor or punch feed roller motor to repeatedly rotate and then stop.
5. Turn the product power off, and then return all of the DIPSW4 switches to the OFF setting.

   TIP: If you are going to perform another test, skip this step and go to the next test—make sure that the saddle entrance motor or punch feed roller motor stops before continuing.
6. If the motor fails the test, replace the motor.

Returning roller test

1. Do one of the following:
   - If this is the first test you are performing, turn the product power off, remove all paper, and then make sure that all doors and trays are closed.
   - If you are continuing from a previous main controller PCA test, go to step 2.
2. On the main controller PCA, set DIPSW4 to the following settings:
   - Switch 1 ON
   - Switch 2 OFF
   - Switch 3 ON
   - Switch 4 OFF
   - Switch 5 and switch 6 ON
   - Switch 7 OFF
   - Switch 8 ON
3. Turn the product power on.
4. On the controller PCA, press and release SW3, and then observe the following:
   - **First press of SW3**: The swing guide is open, the stapled job output motor rotates, and the returning roller rotates—listen for the motor to rotate.
   - **Second press of SW3**: The stapled job output motor and returning roller stop, and the swing guide is closed.

   NOTE: Press and hold down SW3 to repeatedly cause the swing guide to open and close, and the stapled job output motor and the returning roller to rotate and stop.
5. Turn the product power off, and then return all of the DIPSW4 switches to the OFF setting.

   TIP: If you are going to perform another test, skip this step and go to the next test—make sure that the swing guide is closed, and that the stapled job output motor and the returning roller are stopped before continuing.
6. If the returning roller fails the test, replace the defective assembly.

Switchback motor test

1. Do one of the following:
   - If this is the first test you are performing, turn the product power off, remove all paper, and then make sure that all doors and trays are closed.
   - If you are continuing from a previous main controller PCA test, go to step 2.
2. On the main controller PCA, set DIPSW4 to the following settings:
   - Switch 1 ON
   - Switch 2 OFF
   - Switch 3 and switch 4 ON
   - Switch 5 OFF
   - Switch 6 through switch 8 ON
3. Turn the product power on.
4. On the controller PCA, press and release SW3, and then observe the following:
   - **First press of SW3**: The switchback motor rotates in the feed direction at a slow rate—118 mm/sec (4.65 in/sec). Listen for the motor to slowly rotate
   - **Second press of SW3**: The switchback motor rotates in the feed direction at a medium rate—235 mm/sec (9.25 in/sec). Listen for the motor to increase rotation speed.
   - **Third press of SW3**: The switchback motor rotates in the feed direction at a fast rate—700 mm/sec (27.56 in/sec). Listen for the motor to increase rotation speed.
   - **Fourth press of SW3**: The switchback motor rotates in the reverse direction at a slow rate—118 mm/sec (4.65 in/sec). Listen for the motor to slowly rotate.
   - **Fifth press of SW3**: The switchback motor rotates in the reverse direction at a medium rate—500 mm/sec (19.69 in/sec). Listen for the motor to increase rotation speed.
   - **Sixth press of SW3**: The switchback motor rotates in the reverse direction at a fast rate—700 mm/sec (27.56 in/sec). Listen for the motor to increase rotation speed.
   - **Seventh press of SW3**: The switchback motor stops.

   NOTE: Press and hold down SW3 to repeatedly cause the switchback motor to rotate in the feed direction at a slow to fast rate, reverse direction and rotate from a slow to fast rate, and then stop.
5. Turn the product power off, and then return all of the DIPSW4 switches to the OFF setting.

   TIP: If you are going to perform another test, skip this step and go to the next test—make sure that the switchback motor is stopped before continuing.
6. If the motor fails the test, replace the motor.

Registration motor test

1. Do one of the following:
   - If this is the first test you are performing, turn the product power off, remove all paper, and then make sure that all doors and trays are closed.
   - If you are continuing from a previous main controller PCA test, go to step 2.
2. On the main controller PCA, set DIPSW4 to the following settings:
   - Switch 1 ON
   - Switch 2 OFF
   - Switch 3 through switch 5 ON
   - Switch 6 through switch 8 OFF
3. Turn the product power on.
4. On the controller PCA, press and release SW3, and then observe the following:
   - **First press of SW3**: The registration motor rotates at a slow rate—118 mm/sec (4.65 in/sec). Listen for the motor to slowly rotate.
   - **Second press of SW3**: The registration motor rotates at a medium rate—500 mm/sec (19.69 in/sec). Listen for the motor to increase rotation speed.
   - **Third press of SW3**: The registration motor rotates at a fast rate—700 mm/sec (27.56 in/sec). Listen for the motor to increase rotation speed.
   - **Fourth press of SW3**: The registration motor stops.

   NOTE: Press and hold down SW3 to repeatedly cause the registration motor to rotate at a slow to fast rate, and then stop.
5. Turn the product power off, and then return all of the DIPSW4 switches to the OFF setting.

   TIP: If you are going to perform another test, skip this step and go to the next test—make sure that the registration motor is stopped before continuing.
6. If the motor fails the test, replace the motor.

Switchback inlet flapper solenoid test

1. Do one of the following:
   - If this is the first test you are performing, turn the product power off, remove all paper, and then make sure that all doors and trays are closed.
   - If you are continuing from a previous main controller PCA test, go to step 2.
2. On the main controller PCA, set DIPSW4 to the following settings:
   - Switch 1 ON
   - Switch 2 OFF
   - Switch 3 through switch 5 ON
   - Switch 6 and switch 7 OFF
   - Switch 8 ON
3. Turn the product power on.
4. On the controller PCA, press and release SW3, and then observe the following:
   - **First press of SW3**: The switchback inlet flapper solenoid activates—listen for the solenoid to activate.
   - **Second press of SW3**: The switchback inlet flapper solenoid deactivates—listen for the solenoid to deactivate.

   NOTE: Press and hold down SW3 to cause the solenoid to repeatedly activate, and then deactivate.
5. Turn the product power off, and then return all of the DIPSW4 switches to the OFF setting.

   TIP: If you are going to perform another test, skip this step and go to the next test—make sure that the solenoid is deactivated before continuing.
6. If the solenoid fails the test, replace the solenoid.

Switchback roller alienation solenoid test

1. Do one of the following:
   - If this is the first test you are performing, turn the product power off, remove all paper, and then make sure that all doors and trays are closed.
   - If you are continuing from a previous main controller PCA test, go to step 2.
2. On the main controller PCA, set DIPSW4 to the following settings:
   - Switch 1 ON
   - Switch 2 OFF
   - Switch 3 through switch 5 ON
   - Switch 6 OFF
   - Switch 7 ON
   - Switch 8 OFF
3. Turn the product power on.
4. On the controller PCA, press and release SW3, and then observe the following:
   - **First press of SW3**: The switchback roller alienation solenoid activates—listen for the solenoid to activate.
   - **Second press of SW3**: The switchback roller alienation solenoid deactivates—listen for the solenoid to deactivate.

   NOTE: Press and hold down SW3 to cause the solenoid to repeatedly activate, and then deactivate.
5. Turn the product power off, and then return all of the DIPSW4 switches to the OFF setting.

   TIP: If you are going to perform another test, skip this step and go to the next test—make sure that the solenoid is deactivated before continuing.
6. If the solenoid fails the test, replace the solenoid.

Saddle solenoid test

1. Do one of the following:
   - If this is the first test you are performing, turn the product power off, remove all paper, and then make sure that all doors and trays are closed.
   - If you are continuing from a previous saddle controller PCA test, go to step 2.
2. On the saddle controller PCA, set DIPSW to the following settings:
   - Switch 1 through switch 3 OFF
   - Switch 4 ON
   - Switch 5 through switch 8 not used
3. Turn the product power on.
4. On the saddle controller PCA, press and release SW1, and then observe the following:
   - **First press of SW1**: The primary paper deflector solenoid activates—listen for the solenoid to activate.
   - **Second press of SW1**: The primary paper deflector solenoid deactivates—listen for the solenoid to deactivate.
   - **Third press of SW1**: The secondary paper deflector solenoid activates—listen for the solenoid to activate.
   - **Fourth press of SW1**: The secondary paper deflector solenoid deactivates—listen for the solenoid to deactivate.
   - **Fifth press of SW1**: The feed plate solenoid activates—listen for the solenoid to activate.
   - **Sixth press of SW1**: The feed plate solenoid deactivates—listen for the solenoid to deactivate.
   - **Seventh press of SW1**: The booklet entrance solenoid activates—listen for the solenoid to activate.
   - **Eighth press of SW1**: The booklet entrance solenoid deactivates—listen for the solenoid to deactivate.

   NOTE: Press and hold down SW1 to cause the solenoids to repeatedly activate, and then deactivate—in the order listed above.
5. Turn the product power off, and then return all of the DIPSW switches to the OFF setting.

   TIP: If you are going to perform another test, skip this step and go to the next test—make sure that the solenoids are deactivated before continuing.
6. If a solenoid fails the test, replace the defective assembly.

Saddle (booklet) feed motor test

1. Do one of the following:
   - If this is the first test you are performing, turn the product power off, remove all paper, and then make sure that all doors and trays are closed.
   - If you are continuing from a previous saddle controller PCA test, go to step 2.
2. On the saddle controller PCA, set DIPSW to the following settings:
   - Switch 1 OFF
   - Switch 2 ON
   - Switch 3 and switch 4 OFF
   - Switch 5 through switch 8 not used
3. Turn the product power on.
4. On the saddle controller PCA, press and release SW1, and then observe the following:
   - **First press of SW1**: The saddle feed motor rotates at a slow rate—130 mm/sec (5.12 in/sec). Listen for the motor to slowly rotate.
   - **Second press of SW1**: The saddle feed motor rotates at a fast rate—200 mm/sec (7.87 in/sec). Listen for the motor to increase rotation speed.
   - **Third press of SW1**: The saddle feed motor stops.

   NOTE: Press and hold down SW1 to cause the motor to repeatedly rotate, and then stop.
5. Turn the product power off, and then return all of the DIPSW switches to the OFF setting.

   TIP: If you are going to perform another test, skip this step and go to the next test—make sure that the motor is stopped before continuing.
6. If the motor fails the test, replace the defective assembly.

Paper folding motor test

1. Do one of the following:
   - If this is the first test you are performing, turn the product power off, remove all paper, and then make sure that all doors and trays are closed.
   - If you are continuing from a previous saddle controller PCA test, go to step 2.
2. On the saddle controller PCA, set DIPSW to the following settings:
   - Switch 1 OFF
   - Switch 2 ON
   - Switch 3 OFF
   - Switch 4 ON
   - Switch 5 through switch 8 not used
3. Turn the product power on.
4. On the saddle controller PCA, press and release SW1, and then observe the following:
   - **First press of SW1**: The paper folding motor rotates in the feed direction—listen for the motor to rotate.
   - **Second press of SW1**: After a 100 millisecond delay, the paper folding motor rotates in the reverse direction—listen for a pause, and then for the motor to rotate.
   - **Third press of SW1**: The paper folding motor stops.

   NOTE: Press and hold down SW1 to cause the motor to repeatedly rotate, pause, reverse direction, and then stop.
5. Turn the product power off, and then return all of the DIPSW switches to the OFF setting.

   TIP: If you are going to perform another test, skip this step and go to the next test—make sure that the motor is stopped before continuing.
6. If the motor fails the test, replace the defective assembly.

Jogger plate motor test

1. Do one of the following:
   - If this is the first test you are performing, turn the product power off, remove all paper, and then make sure that all doors and trays are closed.
   - If you are continuing from a previous saddle controller PCA test, go to step 2.
2. On the saddle controller PCA, set DIPSW to the following settings:
   - Switch 1 OFF
   - Switch 2 through switch 4 ON
   - Switch 5 through switch 8 not used
3. Turn the product power on.
4. On the saddle controller PCA, press and release SW1, and then observe the following:
   - **First press of SW1**: The jogger plate moves to the push position—listen for the motor to rotate.
   - **Second press of SW1**: The jogger plate moves to the home position—listen for the motor to rotate.

   NOTE: Press and hold down SW1 to cause the plate to move from position to position.
5. Turn the product power off, and then return all of the DIPSW switches to the OFF setting.

   TIP: If you are going to perform another test, skip this step and go to the next test—make sure that the motor is stopped before continuing.
6. If the motor fails the test, replace the defective assembly.

Saddle (booklet) aging test

1. Do one of the following:
   - If this is the first test you are performing, turn the product power off, remove all paper, and then make sure that all doors and trays are closed.
   - If you are continuing from a previous saddle controller PCA test, go to step 2.
2. On the saddle controller PCA, set DIPSW to the following settings:
   - Switch 1 ON
   - Switch 2 through switch 4 OFF
   - Switch 5 through switch 8 not used
3. Turn the product power on.
4. On the saddle controller PCA, press and release SW1, and then observe the following:
   - **First press of SW1**: The following aging sequence begins and continues until SW1 is pressed and released again:
     a. The paper folding motor rotates.
     b. The booklet feeder motor rotates.
     c. The jogger plate moves.
     d. The booklet alignment plate moves to the A3-P alignment position.
     e. The booklet alignment plate moves to the A4-P alignment position.
     f. The paper position plate moves to the LDR-P staple position.
     g. The paper position plate moves to the LDR-P folding position.
     h. The paper position plate moves to the LTR-P staple position.
     i. The paper position plate moves to the LTR-P folding position.
     j. The guide plate moves to the up position, and then to the down position.
     k. The booklet feeder motor stops.
     l. All of the saddle assembly solenoids activate, and then deactivate.
   - **Second press of SW1**: The aging sequence above stops.

   NOTE: Press and hold down SW1 to continuously repeat and then stop the aging sequence above.

5. Turn the product power off, and then return all of the DIPSW switches to the OFF setting.

   TIP: If you are going to perform another test, skip this step and go to the next test—make sure that the aging sequence is stopped before continuing.

6. If the aging sequence fails the test, replace the defective assembly.

Saddle (booklet) alignment plate test

1. Do one of the following:
   - If this is the first test you are performing, turn the product power off, remove all paper, and then make sure that all doors and trays are closed.
   - If you are continuing from a previous saddle controller PCA test, go to step 2.
2. On the saddle controller PCA, set DIPSW to the following settings:
   - Switch 1 ON
   - Switch 2 and switch 3 OFF
   - Switch 4 ON
   - Switch 5 through switch 8 not used
3. Turn the product power on.
4. On the saddle controller PCA, press and release SW1, and then observe the following:
   - **First press of SW1**: The booklet alignment plate moves to the home position—listen for the plate to move.
   - **Second press of SW1**: The booklet alignment plate moves to the A4-P pre-position—listen for the plate to move.
   - **Third press of SW1**: The booklet alignment plate moves to the A4-P alignment position—listen for the plate to move.

   NOTE: Press and hold down SW1 to cause the plate to move from position to position.

5. Turn the product power off, and then return all of the DIPSW switches to the OFF setting.

   TIP: If you are going to perform another test, skip this step and go to the next test—make sure that the plate is in the home position before continuing.

6. If the plate fails the test, replace the defective assembly.

Paper position plate test

1. Do one of the following:
   - If this is the first test you are performing, turn the product power off, remove all paper, and then make sure that all doors and trays are closed.
   - If you are continuing from a previous saddle controller PCA test, go to step 2.
2. On the saddle controller PCA, set DIPSW to the following settings:
   - Switch 1 ON
   - Switch 2 OFF
   - Switch 3 ON
   - Switch 4 OFF
   - Switch 5 through switch 8 not used
3. Turn the product power on.
4. On the saddle controller PCA, press and release SW1, and then observe the following:
   - **First press of SW1**: The paper position plate moves to the home position—listen for the plate to move.
   - **Second press of SW1**: The booklet alignment plate moves to the A4-P folding position—listen for the plate to move.
   - **Third press of SW1**: The booklet alignment plate moves to the A4-P staple position—listen for the plate to move.

   NOTE: Press and hold down SW1 to cause the plate to move from position to position.

5. Turn the product power off, and then return all of the DIPSW switches to the OFF setting.

   TIP: If you are going to perform another test, skip this step and go to the next test—make sure that the plate is in the home position before continuing.

6. If the plate fails the test, replace the defective assembly.

Guide plate test

1. Do one of the following:
   - If this is the first test you are performing, turn the product power off, remove all paper, and then make sure that all doors and trays are closed.
   - If you are continuing from a previous saddle controller PCA test, go to step 2.
2. On the saddle controller PCA, set DIPSW to the following settings:
   - Switch 1 ON
   - Switch 2 OFF
   - Switch 3 and switch 4 ON
   - Switch 5 through switch 8 not used
3. Turn the product power on.
4. On the saddle controller PCA, press and release SW1, and then observe the following:
   - **First press of SW1**: The guide plate moves to the down position—listen for the plate to move.
   - **Second press of SW1**: The guide plate moves to the up position—listen for the plate to move.

   NOTE: Press and hold down SW1 to cause the plate to move from position to position.
5. Turn the product power off, and then return all of the DIPSW switches to the OFF setting.

   TIP: If you are going to perform another test, skip this step and go to the next test—make sure that the plate is in the home position before continuing.
6. If the plate fails the test, replace the defective assembly.

Punch aging test

1. Do one of the following:
   - If this is the first test you are performing, turn the product power off, remove all paper, and then make sure that all doors and trays are closed.
   - If you are continuing from a previous punch controller PCA test, go to step 2.
2. On the punch controller PCA, set DIPSW to the following settings:
   - Switch 1 ON
   - Switch 2 through switch 4 OFF
3. Turn the product power on.
4. On the punch controller PCA, press and release SW602, and then observe the following:
   - **First press of SW602**: The following aging sequence begins and continues until SW1 is pressed and released again:
     a. The punch motor initializes.
     b. The punch side registration motor initializes.
     c. The punch moves to the inside position.
     d. The punch operation begins.
     e. The punch moves to its initial position.
     f. The sequence starts again with step c.
   - **Second press of SW1**: The aging sequence above stops.

   NOTE: Press and hold down SW602 to continuously repeat the aging sequence steps a and b above.
5. Turn the product power off, and then return all of the DIPSW switches to the OFF setting.

   TIP: If you are going to perform another test, skip this step and go to the next test—make sure that the punch is in the home (front) position before continuing.
6. If the aging sequence fails the test, replace the defective assembly.

Punch side registration test

1. Do one of the following:
   - If this is the first test you are performing, turn the product power off, remove all paper, and then make sure that all doors and trays are closed.
   - If you are continuing from a previous punch controller PCA test, go to step 2.
2. On the punch controller PCA, set DIPSW to the following settings:
   - Switch 1 OFF
   - Switch 2 ON
   - Switch 3 and switch 4 OFF
3. Turn the product power on.
4. On the punch controller PCA, locate LED601 and LED602, and then observe the following:
   - Ready state
     - LED601 off
     - LED602 flashing
   - Press SW603 to move the punch to the center position.
     - LED601 and LED602 alternate flashing
   - Press SW603 to stop the LEDs from flashing.
     - LED601 off
     - LED602 flashing
   - Press SW602 to move the punch to the home (front) position.
     - LED601 and LED602 alternate flashing
   - Press SW602 to stop the LEDs from flashing and return to the ready state.
     - LED601 is off
     - LED602 is flashing
5. Turn the product power off, and then return all of the DIPSW switches to the OFF setting.

   TIP: If you are going to perform another test, skip this step and go to the next test—make sure that the punch is in the home (front) position before continuing.
6. If the punch side registration fails the test, replace the defective assembly.

Punch motor test

1. Do one of the following:
   - If this is the first test you are performing, turn the product power off, remove all paper, and then make sure that all doors and trays are closed.
   - If you are continuing from a previous punch controller PCA test, go to step 2.
2. On the punch controller PCA, set DIPSW to the following settings:
   - Switch 1 ON
   - Switch 2 ON
   - Switch 3 and switch 4 OFF
3. Turn the product power on.
4. On the punch controller PCA, locate LED601 and LED602, and then observe the following:
   - Ready state
     - LED601 off
     - LED602 flashing
   - Press SW602 (for a 3-hole or 4-hole punch) or SW603 (for a 2-hole punch) to activate the punch operation (drills go up and down).
     - LED601 and LED602 alternate flashing
   - Press SW602 (for a 3-hole or 4-hole punch) or SW603 (for a 2-hole punch) to stop the LEDs from flashing.
     - LED601 is off
     - LED602 is flashing
5. Turn the product power off, and then return all of the DIPSW switches to the OFF setting.

   TIP: If you are going to perform another test, skip this step and go to the next test—make sure that the drills have stopped moving before continuing.
6. If the punch side registration fails the test, replace the defective assembly.

Scanner tests M830

Use these diagnostic tests to manually test the document feeder and scanner sensors.

Scanner tests

This section lists the sensors available in the Scanner Tests.

Use the scanner tests

The Scanner Tests screen shows the sensor name, sensor state (active or inactive), and the number of times the sensor has been toggled (activated).

1. From the Home screen on the product control panel, scroll to and touch the Administration button.
2. Open the following menus:
   - Troubleshooting
   - Diagnostic Tests
   - Scanner Tests
   - Sensors
3. Touch the sensor name on the Scanner Tests screen to display a sensor location graphic on the control-panel display.
4. Activate the desired sensor, and then check the control-panel display to verify the sensor state (active or inactive).
   - The State virtual LED next to the sensor number and sensor name illuminates green when the sensor is active.
   - The Toggle virtual LED next to the sensor number and sensor name illuminates green after the sensor is activated and increments by one each time the sensor is interrupted (activated or deactivated).

     For example, opening the flatbed cover increments the Flatbed cover Toggle item count two times—once when the door is opened, and once when the door is closed.
5. Touch the Reset Sensors button to reset the Toggle count item.

   -or-

   Touch the Cancel button to exit the Scanner Tests screen, and then touch the Cancel button again to return to the Diagnostic Tests menu.

Scanner tests sensors

- ADF paper present
- ADF (length) short
- ADF (length) long
- ADF slider 1
- ADF slider 2

- ADF slider 3
- ADF jam cover
- ADF paper path deskew
- ADF paper path pick success
- Paper path sensor 1 (unreachable)
- Flatbed Y (length) short
- Flatbed Y (length) long
- Flatbed cover

Diagrams

- Block diagrams
- Location of connectors
- Plug/jack locations
- Locations of major components
- General timing chart
- Circuit diagrams

Block diagrams

Figure 2-13 Motors and solenoids (product base)

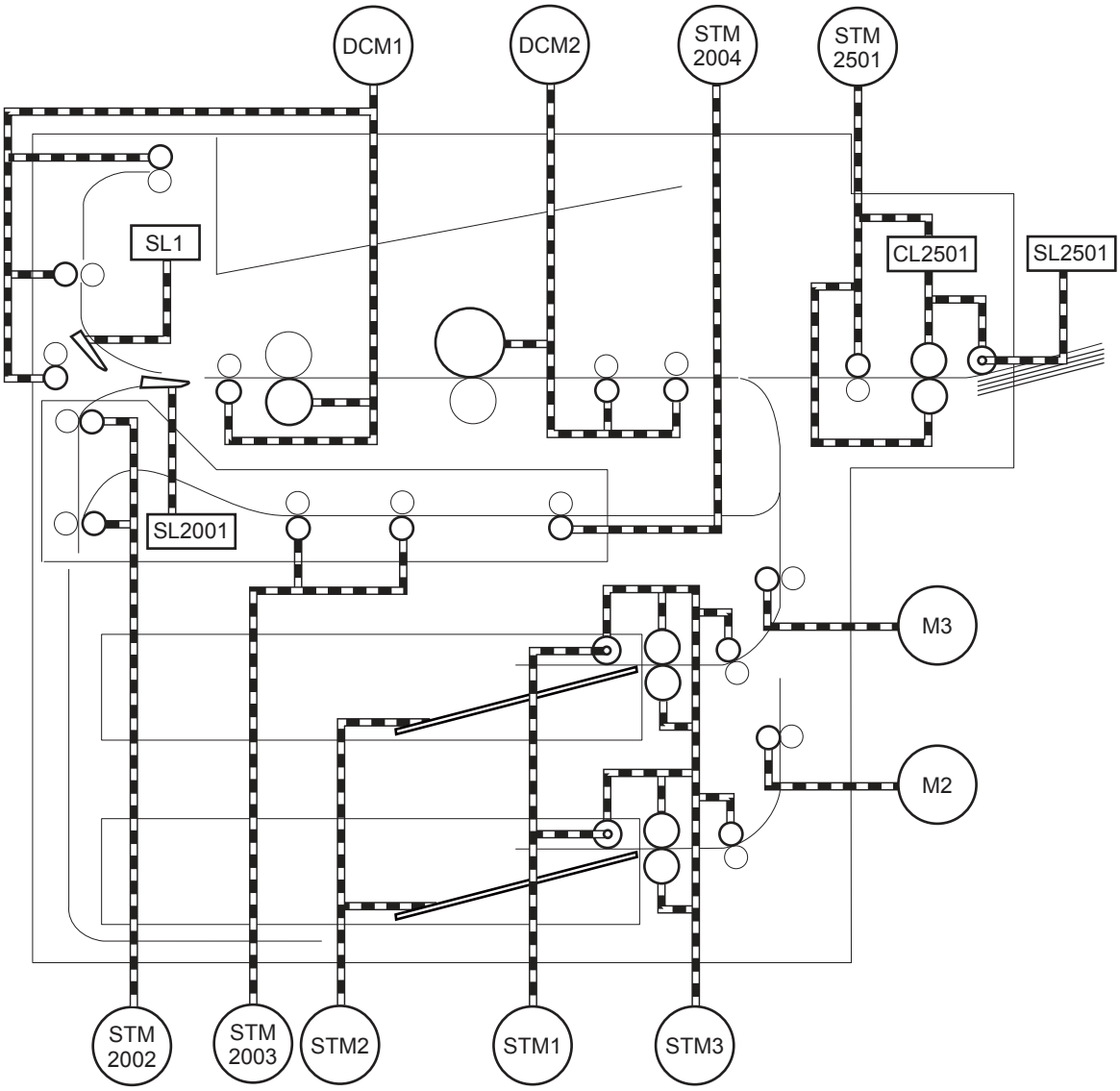

Table 2-16 Motors and solenoids (paper path)

Item	Description	Item	Description
DCM1	Fuser motor	STM2003	Duplex feed motor
DCM2	Drum motor	STM2004	Duplex re-pickup motor
M2	Tray 3 feed motor	STM2501	Tray 1 pickup motor
M3	Tray 2 feed motor	SL1	Face-up solenoid (M806 only)
STM1	Pickup motor	SL2001	Duplex flapper solenoid
STM2	Lift-up motor	SL2501	Tray 1 pickup solenoid
STM3	Cassette pickup motor	CL2501	Tray 1 feed clutch
STM2002	Duplex switchback motor		

Figure 2-14 Rollers (product base)

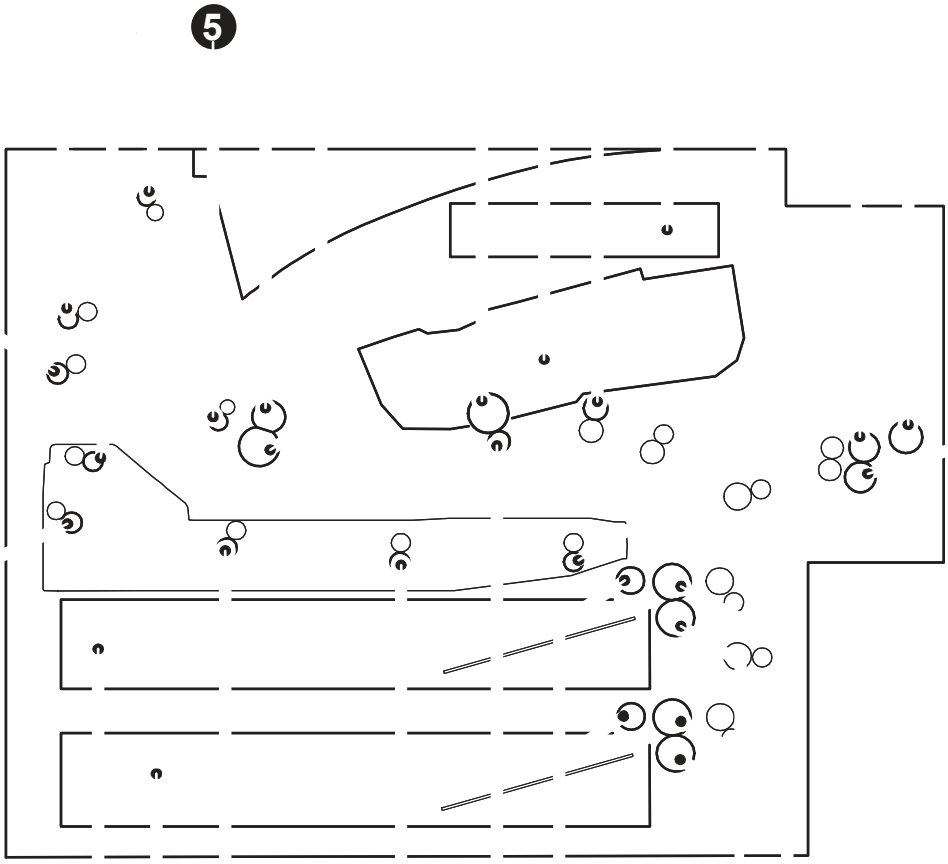

Item	Description	Item	Description
1	Face-up delivery roller	13	MP tray feed roller (Tray 1)
2	Intermediate delivery roller	14	MP tray pickup roller (Tray 1)
3	Duplex inlet roller	15	MP tray separation roller (Tray 1)
4	Face-down delivery roller	16	Cassette feed roller
5	Fuser delivery roller	17	Cassette separation roller
6	Fuser sleeve	18	Cassette pickup roller
7	Pressure roller	18	Transfer roller
8	Photosensitive drum	20	Duplex feed roller
9	Cartridge	21	Duplex registration roller
10	Registration roller	22	Tray 2
11	Laser/scanner	23	Tray 1
12	Duplex re-pickup roller	24	Duplex switch back roller

Figure 2-15 Switches and sensors (product base)

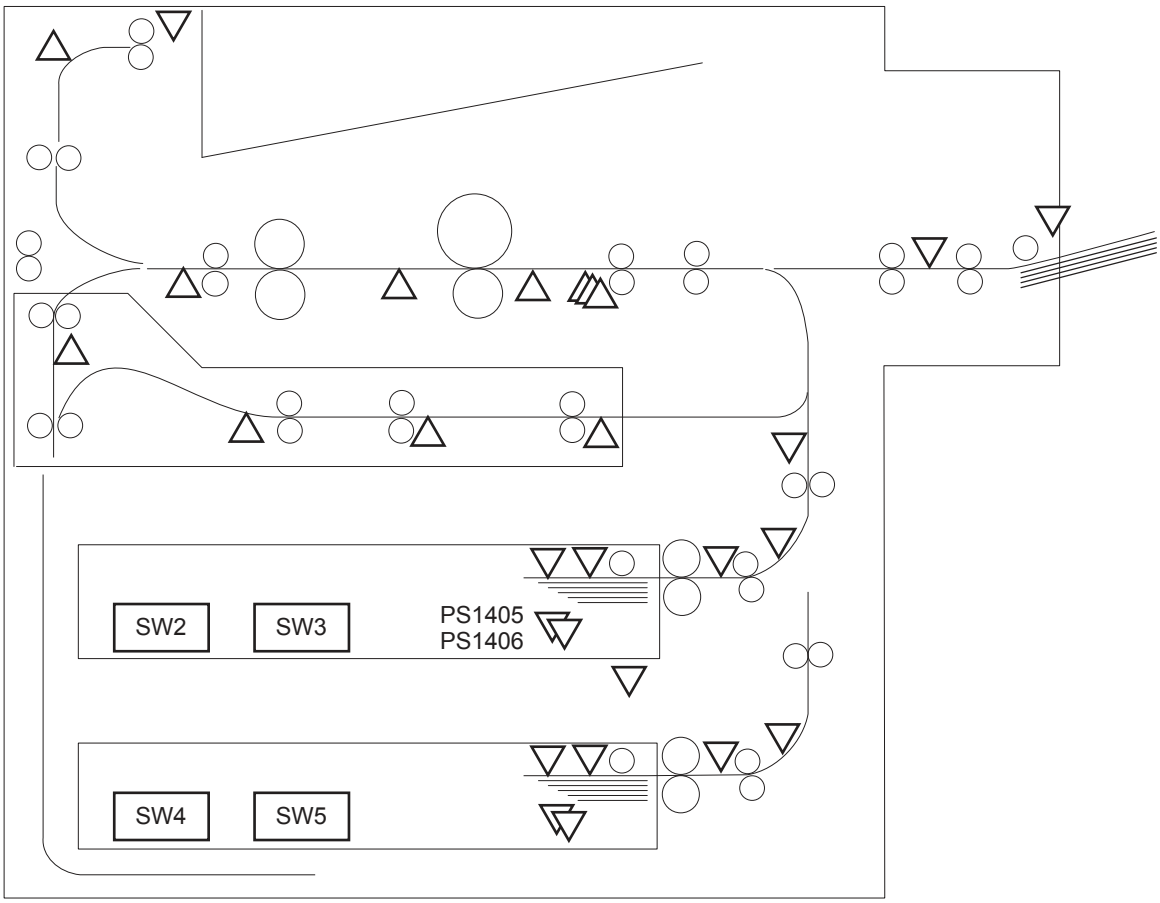

Table 2-17 Photo switches and sensors (product base)

Item	Description	Item	Description
SW2	Tray 2 media-length switch	PS1406	Tray 2 media-level sensor 2
SW3	Tray 2 media-width switch	PS1407	Tray 3 media-level sensor 1
SW4	Tray 3 media-length switch	PS1408	Tray 3 media-level sensor 2
SW5	Tray 3 media-width switch	PS1409	Tray 2 media-surface sensor
PS1	Right media-width sensor	PS1410	Tray 2 media-presence sensor
PS2	Left media-width sensor	PS1411	Tray 3 media-surface sensor
PS3	Center media-width sensor	PS1412	Tray 3 media-presence sensor
PS4	TOP (top-of-page) sensor	PS1413	Cassette pickup roller home position sensor
PS8	Tray 2 feed sensor C	PS1451	Face-down tray delivery sensor (M806 only)
PS9	Loop sensor	PS1452	Face-down tray media-full sensor (M806 only)
PS502	Fuser delivery sensor	PS2002	Duplex switch back sensor
PS1401	Tray 2 feed sensor B	PS2003	Duplex pre-registration sensor
PS1402	Tray 2 feed sensor A	PS2004	Duplex feed sensor
PS1403	Tray 3 feed sensor B	PS2005	Duplex residual media sensor

Table 2-17 Photo switches and sensors (product base) (continued)

Item	Description	Item	Description
PS1404	Tray 3 feed sensor A	PS2501	Tray 1 media-presence sensor
PS1405	PS1405 Tray 2 media-level sensor 1	PS2502	Tray 1 feed sensor

Figure 2-16 Document feeder sensors (M830 only)

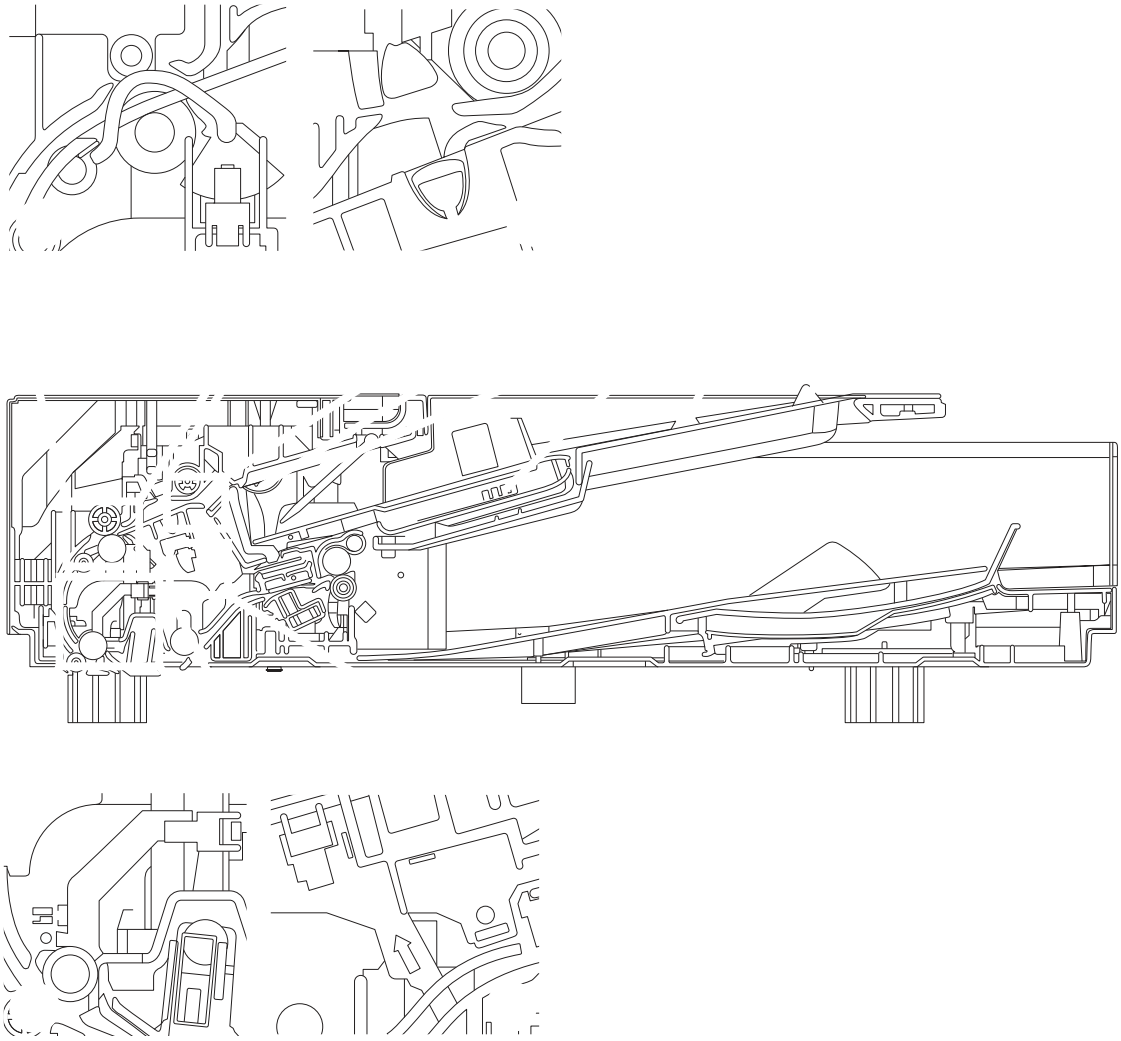

Table 2-18 Document feeder sensors

Item number	Component name	Description
1	Sensor, legal	Detects whether there is a legal-size original.
2	Sensor, portrait/landscape	Detects whether there is a portrait-size or landscape-size original.
3	Sensor, media width	
4	Sensor, stack height	

Table 2-18 Document feeder sensors (continued)

Item number	Component name	Description
5	Sensor, paper presence	Detects whether a document is present in the document feeder. If paper is present in the document feeder when copies are made, the product scans the document using the document feeder. If no paper is present when copies are made, the product scans the document using the scanner glass.
6	Sensor, ultrasonic	Uses ultrasonic sound to detect a mutli-page paper feed. NOTE: This sensor also functions as the pick success sensor.
7	Sensor, deskew	Detects the top of the page as it approaches the back-side scan module during e-duplex copy jobs.
8	Sensor, prescan1	For an e-duplex copy job (HP EveryPage), this sensor is used to activate the frontside scan module (this component is in the scanner base) and the frontside background selector (this component is in the document feeder) if needed.
9	Sensor, prescan2	For an e-duplex copy job, this sensor is used to activate the backside scan module and the backside background selector if needed (these components are in the document feeder) .

Figure 2-17 Jam sensors (product base)

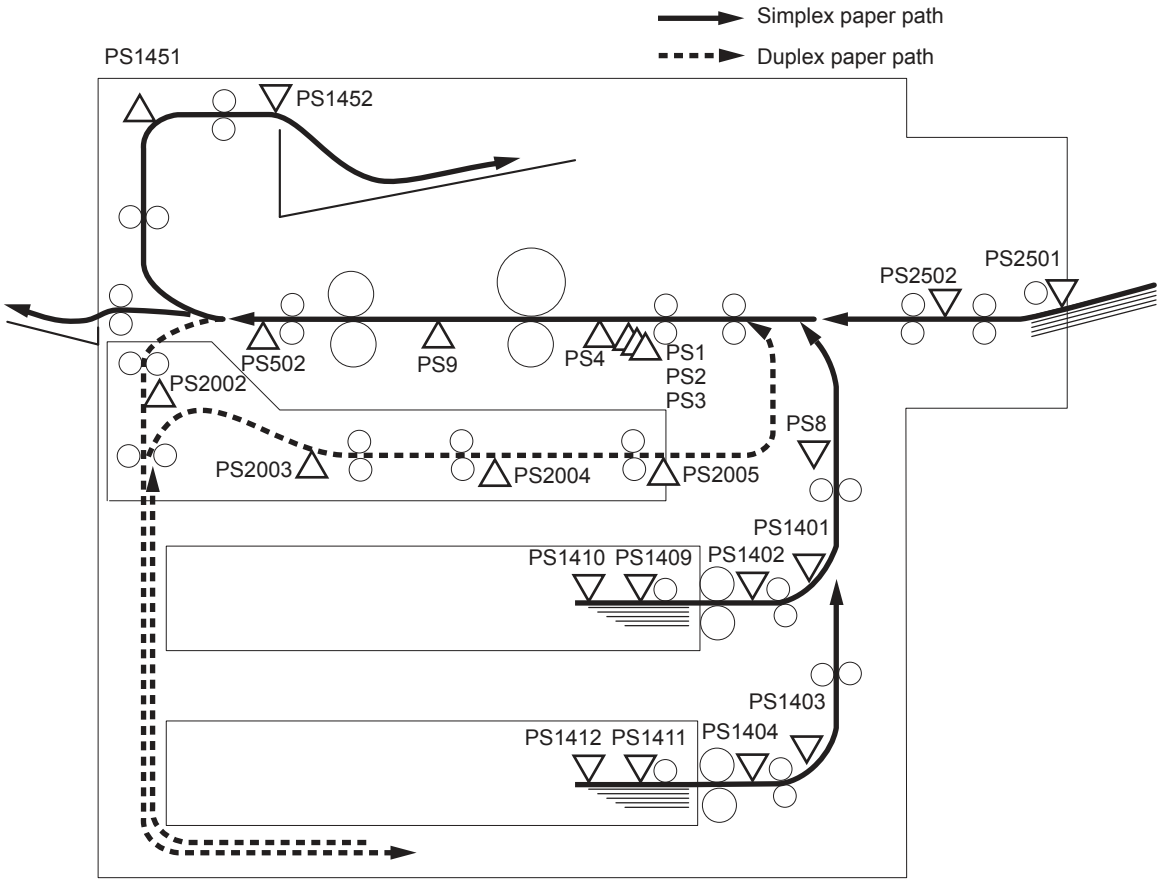

Table 2-19 Jam sensors (product base)

Item	Description	Item	Description
PS1	Right media-width sensor	PS1403	Cassette 2 feed sensor B
PS2	Left media-width sensor	PS1404	Cassette 2 feed sensor A
PS3	Center media-width sensor	PS1451	Face-down tray delivery sensor (M806 only)
PS4	TOP (top-of-page) sensor	PS1452,	Face-down tray media-full sensor (M806 only)
PS8	Cassette 1 feed sensor C	PS2002	Duplex switch back sensor
PS9	Loop sensor	PS2003	Duplex pre-registration sensor
PS502	Fuser delivery sensor	PS2004	Duplex feed sensor
PS1401	Cassette 1 feed sensor B	PS2005	Duplex residual media sensor
PS1402	Cassette 1 feed sensor A	PS2502	Tray 1 feed sensor

Figure 2-18 High capacity input (HCI) feeder jam sensors

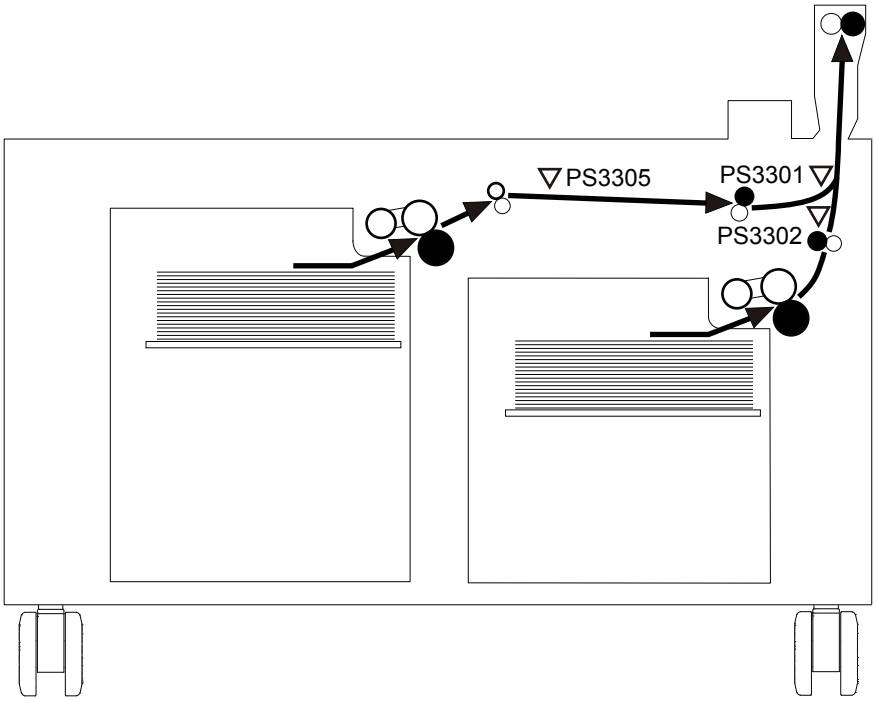

Table 2-20 High capacity input (HCI) feeder jam sensors

Item	Description
PS3301	Media feed sensor
PS3302	Right cassette media feed sensor
PS3305	Left cassette media feed sensor

Figure 2-19 High capacity input (HCI) feeder cross section

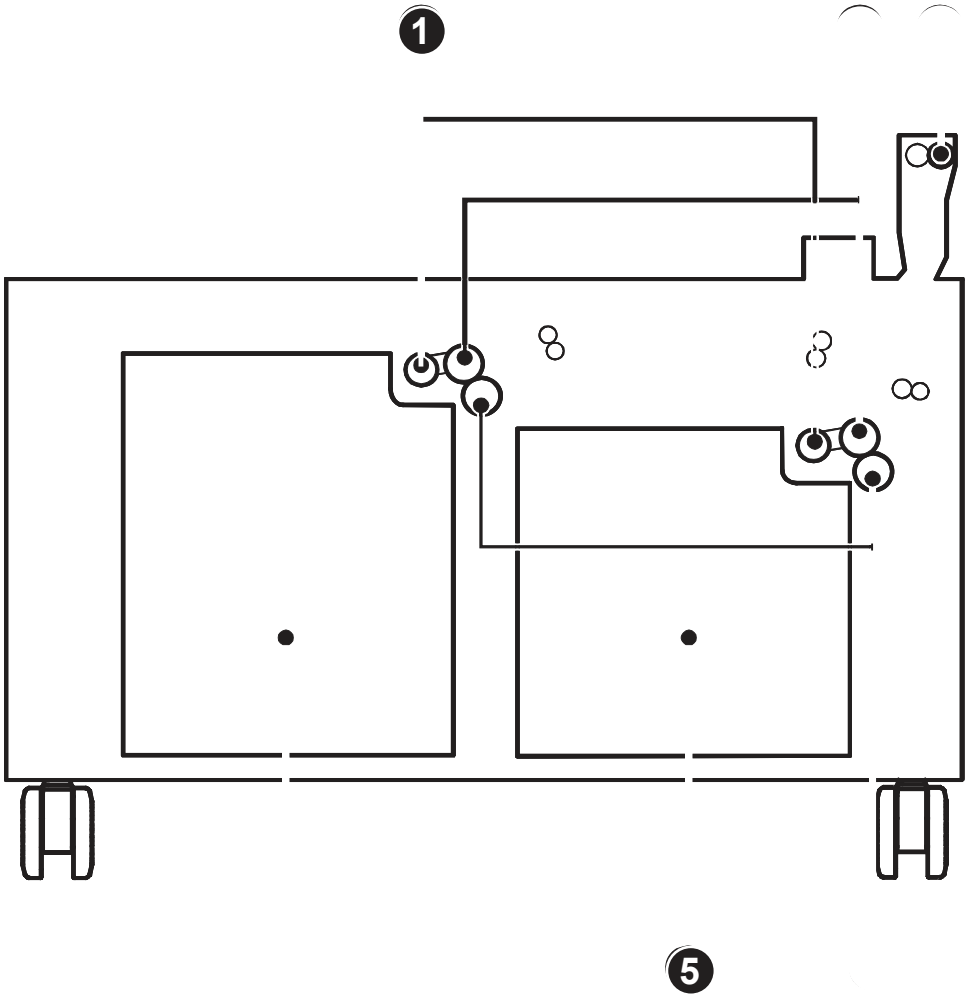

Table 2-21 High capacity input (HCI) feeder cross section

Item	Description
1	Cassette pickup roller
2	Cassette feed roller
3	Intermediate feed roller
4	Cassette separation roller
5	Right cassette
6	Left cassette

Figure 2-20 Stapler/stacker (SS) and Stapler/stacker with hole punch (SSHP) cross section

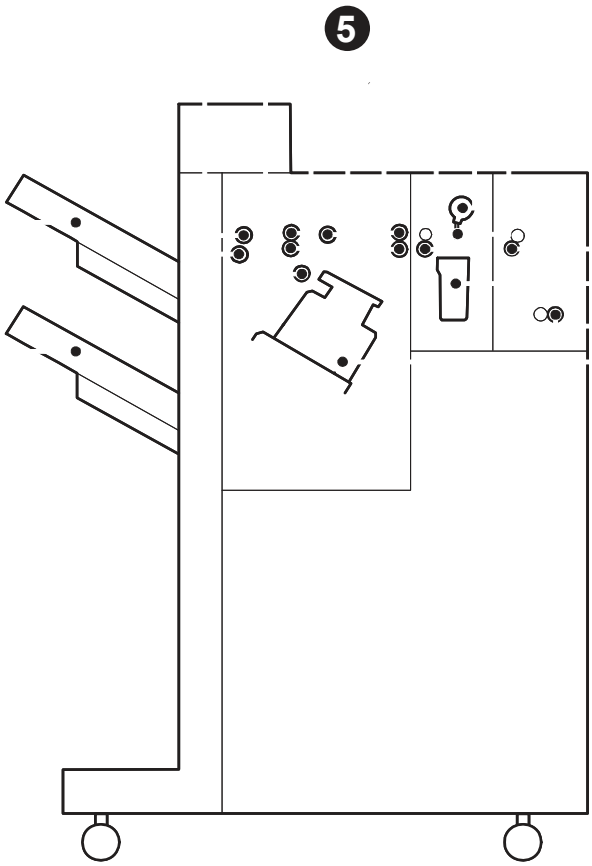

Table 2-22 Stapler/stacker (SS) and Stapler/stacker with hole punch (SSHP) cross section

Item	Description	Item	Description
1	Output bin	8	Cam
2	Stack ejection roller	9	Punch (SSHP only)
3	Return roller	10	Registration roller
4	Delivery roller	11	Punch chip box (dust box collector; SSHP only)
5	Buffer roller	12	Switch back roller
6	Inlet roller	13	Stapler
7	Punch feed roller (SSHP only)		

Figure 2-21 Booklet maker (BM) cross section

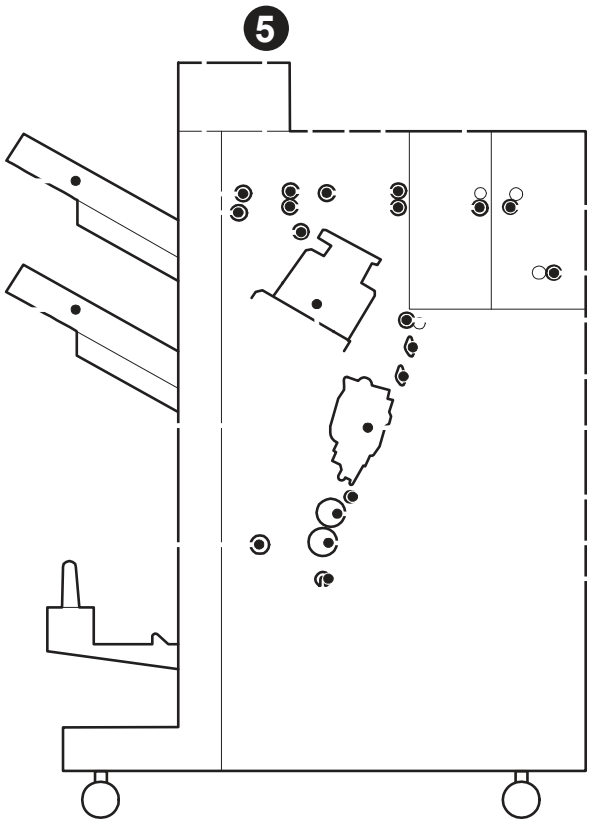

Table 2-23 Booklet maker (BM) cross section

Item	Description	Item	Description
1	Saddle delivery roller	10	Registration roller
2	Stapler	11	Switch back roller
3	Output bin	12	Inlet roller 2
4	Stack ejection roller	13	Flapper
5	Reverse roller	14	Stitcher
6	Delivery roller	15	Intermediate roller
7	Buffer roller	16	Fold roller
8	Inlet roller	17	Crescent roller
9	Inlet roller 1		

Location of connectors

DC controller PCA connectors

Figure 2-22 DC controller PCA connectors

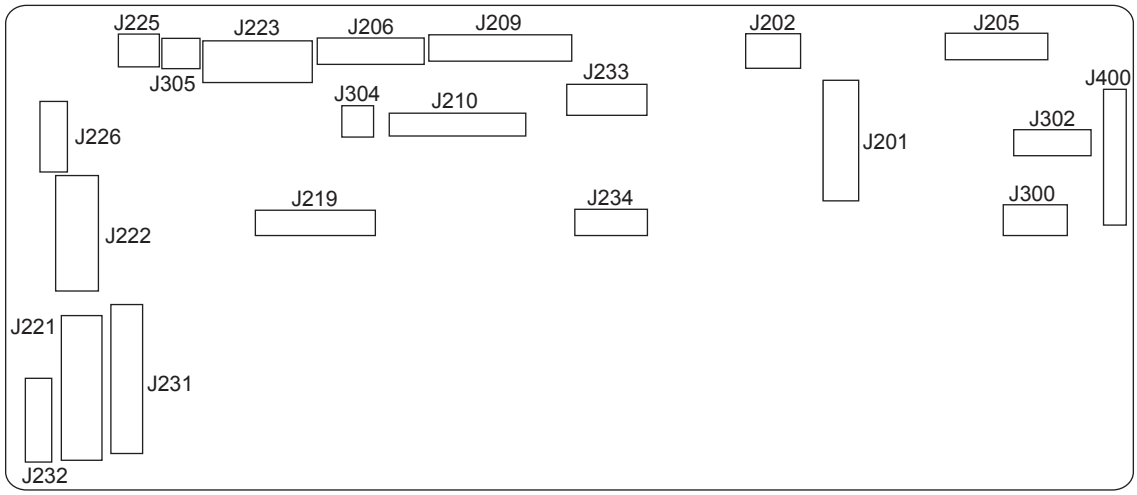

Table 2-24 DC controller PCA connectors

Item	Description	Item	Description
J201	Low-voltage power supply (LVPS)	J226	Power supply fan Condensation prevention fan
J202	Interlock switch		
J205	Output accessory detection switch Face-up solenoid (M806 only) Rear delivery fan Front delivery fan Center delivery fan (M806 only) Face-down tray media-full sensor (M806 only) Face-down tray delivery sensor (M806 only)	J231	Driver PCA
J206	Low-voltage power supply (LVPS)	J232	Driver PCA
J209	Laser/scanner Right door open detection switch	J233	Fuser motor
J210	High-voltage power supply (HVPS)	J234	Laser/scanner motor
J219	Fuser	J300	Not used

Table 2-24 DC controller PCA connectors (continued)

Item	Description	Item	Description
J221	Tray 2 media-level sensor 1	J302	Power switch
	Tray 2 media-level sensor 2		Power LED
	Tray 2 media-surface sensor		Left door open detection switch
	Tray 2 media-presence sensor		Front door open detection switch
	Tray 2 feed sensor A		
	Tray 2 feed sensor B		
	Tray 2 feed sensor C		
	Tray 2 media-length switch		
	Tray 2 media-width switch		
	Tray 3 media-level sensor 1		
	Tray 3 media-level sensor 2		
	Tray 3 media-surface sensor		
	Tray 3 media-presence sensor		
J221	Tray 3 feed sensor A	J304	E-label (toner cartridge memory tag)
	Tray 3 feed sensor B		
	Tray 3 media-length switch		
	Tray 3 media-width switch		
	Cassette pickup roller home position sensor		
	Controller fan		
J222	Rear edge cooling fan	J305	Toner cartridge sensor PCA
	Front edge cooling fan		
	Drum motor		
	Duplex unit		
J223	Tray 1 pickup assembly	J400	Inter connect board (ICB)
	Paper deck (HCI)		
	Loop sensor		
J225	Toner cartridge fan		

High capacity input (HCI) feeder controller PCA connectors

Figure 2-23 High capacity input (HCI) feeder controller PCA connectors

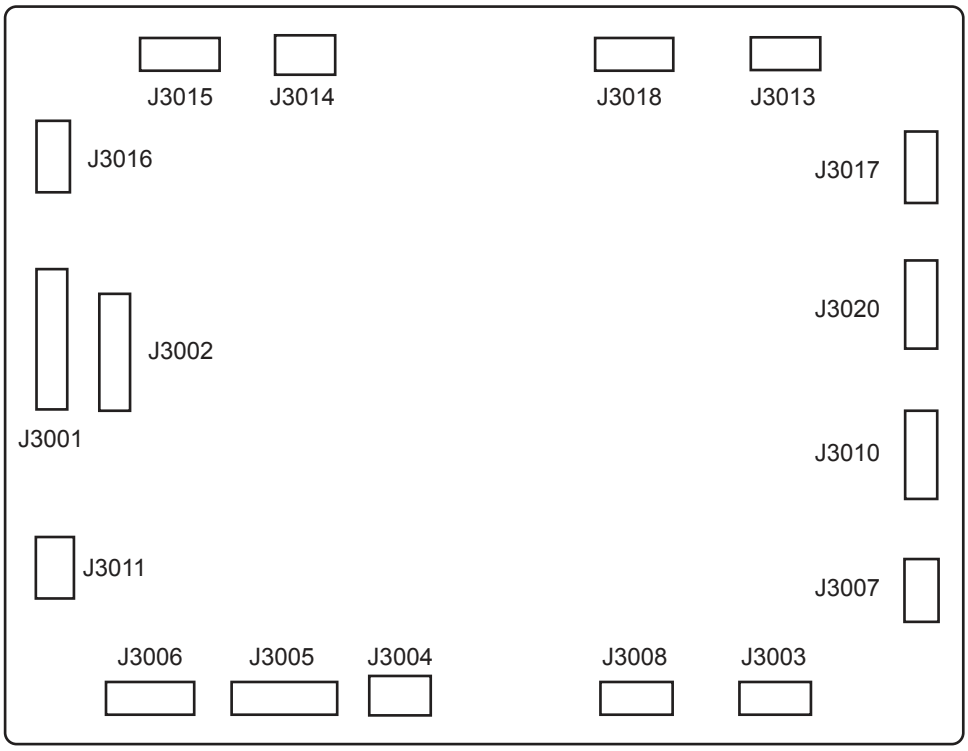

Table 2-25 High capacity input (HCI) feeder controller PCA connectors

Item	Description	Item	Description
J3001	DC controller PCA	J3010	Not used
J3002	Not used	J3011	Intermediate feed motor
J3003	Right cassette lifter motor	J3013	Left cassette lifter motor
J3004	Right cassette pickup motor	J3014	Left cassette pickup motor
J3005	Right cassette lift-up media-surface sensor Right cassette pickup coordinate media surface sensor Right cassette media-presence sensor Right cassette media feed sensor Right cassette pickup solenoid	J3015	Left cassette lift-up media-surface sensor Left cassette pickup coordinate media surface sensor Left cassette media-presence sensor Left cassette pickup solenoid
J3006	Media feed sensor Intermediate unit presence sensor Right door open detection switch	J3016	Left cassette media feed sensor Side feed guide open detection sensor
J3007	Right cassette media-size sensor Right cassette open detection sensor	J3017	Left cassette media-size sensor Left cassette open detection sensor
J3008	Right cassette media-level sensor	J3019	Left cassette media-level sensor

Finishing accessories (all) controller PCA connectors

This is the main controller PCA for the finishing accessories.

- Stapler/stacker (SS)
- Stapler/stacker with hole punch (SSHP)
- Booklet maker (BM)

Figure 2-24 Finishing accessories (all) controller PCA connectors

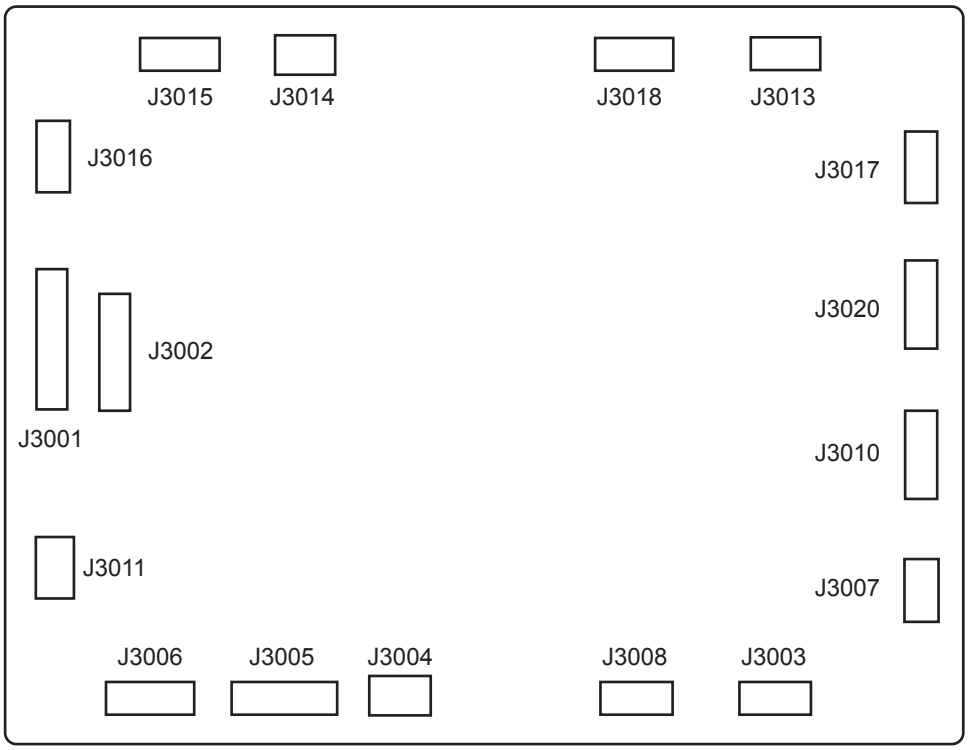

Table 2-26 Finishing accessories (all) controller PCA connectors

Item	Description	Item	Description
J1	Buffer trailing edge retainer solenoid Output bin 1 delivery roller alienation solenoid Buffer roller alienation solenoid Inlet roller alienation solenoid	J15	Saddle controller
J2	Swing guide home position sensor Paper path sensor Front door open-close detection sensor Swing height sensor	J16	Common media feed PCA
J3	Gear change motor Gear change home position sensor Top door open-close detection sensor Inlet sensor	J17	Inlet motor

Table 2-26 Finishing accessories (all) controller PCA connectors (continued)

Item	Description	Item	Description
J4	Trailing edge assist motor Rear alignment plate motor Front alignment plate motor Trailing edge assist home position sensor Rear alignment plate home position sensor Front alignment plate home position sensor Tray paper sensor	J18	Output bin 2 media-surface sensor 2
J5J5	Stapler PCA 1	J19	Stack ejection motor
J6	Output bin 2 media-surface sensor 1 Output bin 1 media-surface sensor Shutter home position sensor Stapler shift home position sensor Shutter open-close clutch	J20	Staple safety switch Swing guide open detection switch
J7	Output bin 1 shift motor Output bin 1 shift area sensor PCA Output bin 1 media-presence sensor	J21	Not used
J8	Output bin 2 shift motor Output bin 2 shift area sensor PCA Output bin 2 media-presence sensor	J24	Swing motor
J9	Saddle inlet motor Punch controller	J25	Not used
J10	Front door open detection switch	J27	Not used
J11	Intermediate feed unit	J28	Not used
J12	Saddle controller	J29	Not used
J13	Lower stack ejection roller clutch	J30	Saddle controller
J14	Output tray 1 close detection switch	J32	Not used

Plug/jack locations

Figure 2-25 Plug/jack locations (M806)

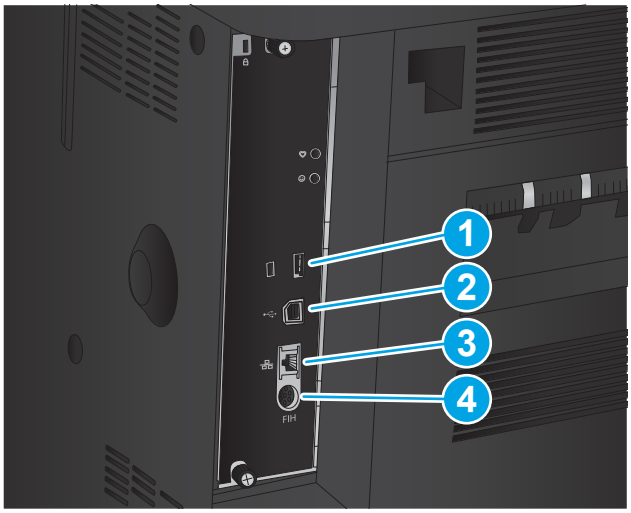

Table 2-27 Plug/jack locations (M806)

Item	Description
1	USB port for connecting external USB drives (this port might be covered)
2	Hi-Speed USB 2.0 printing port NOTE: For Easy-access USB printing, use the USB port near the control panel.
3	Local area network (LAN) Ethernet (RJ-45) network port
4	Foreign interface harness (for connecting external devices)

Figure 2-26 Plug/jack locations (M830)

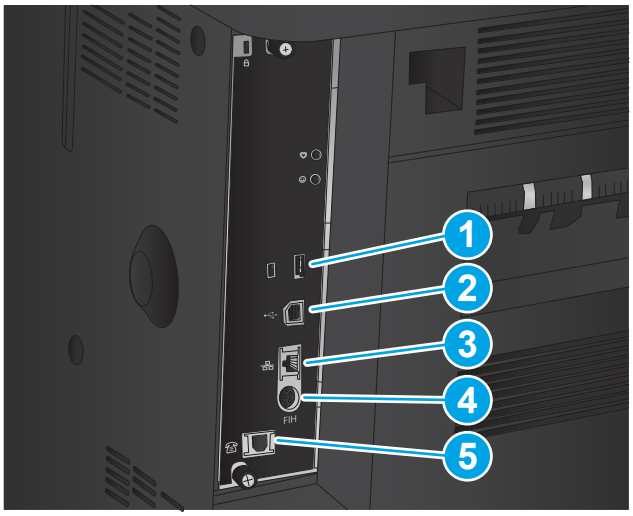

Table 2-28 Plug/jack locations (M830)

Item	Description
1	USB port for connecting external USB drives (this port might be covered)

Table 2-28 Plug/jack locations (M830) (continued)

Item	Description
2	Hi-Speed USB 2.0 printing port
3	Local area network (LAN) Ethernet (RJ-45) network port
4	Foreign interface harness (for connecting external devices)
5	Fax port

Locations of major components

Use the diagrams to locate components.

Base product

Figure 2-27 M830 product integrated scanner assembly (ISA)

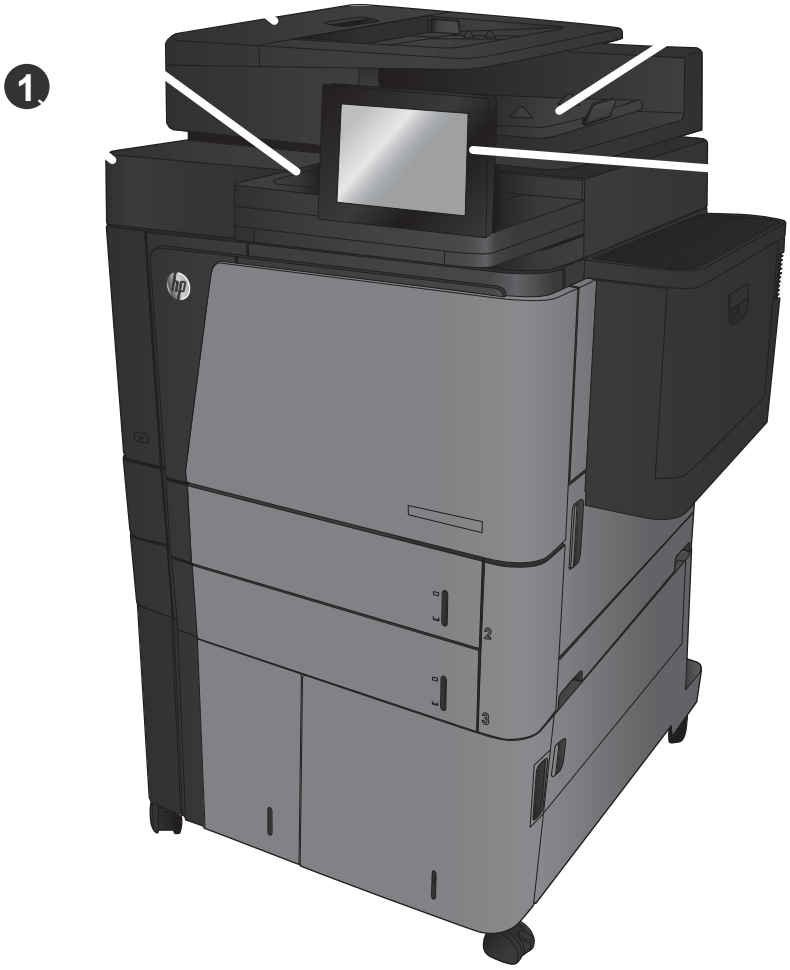

Table 2-29 M830 product integrated scanner assembly (ISA)

Item	Description	Item	Description
1	Scanner assembly	4	ADF output bin
2	Hardware Integration Pocket (HIP) cover	5	Control-panel assembly
3	Automatic document feeder (ADF)		

Figure 2-28 Base product covers

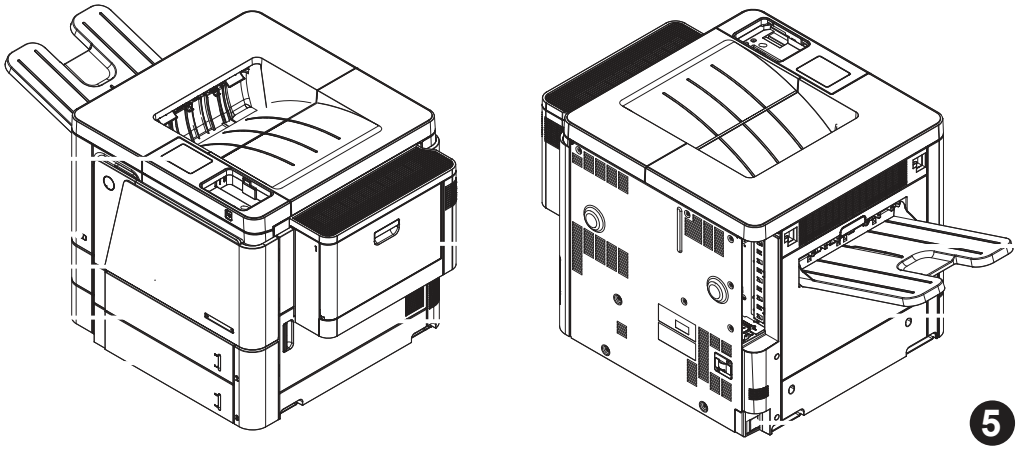

Table 2-30 Base product covers

Item	Description	Item	Description
1	Tray 1 (multipurpose tray)	6	Tray 2
2	Right door	7	Tray 3
3	Face-up tray	8	Front door
4	Left door	9	Power switch
5	Power receptacle	10	Hardware Integration Pocket (HIP) cover (M806 only) NOTE: This cover is on the ISA for the M830 product.

Figure 2-29 Base product main assemblies (1 of 3)

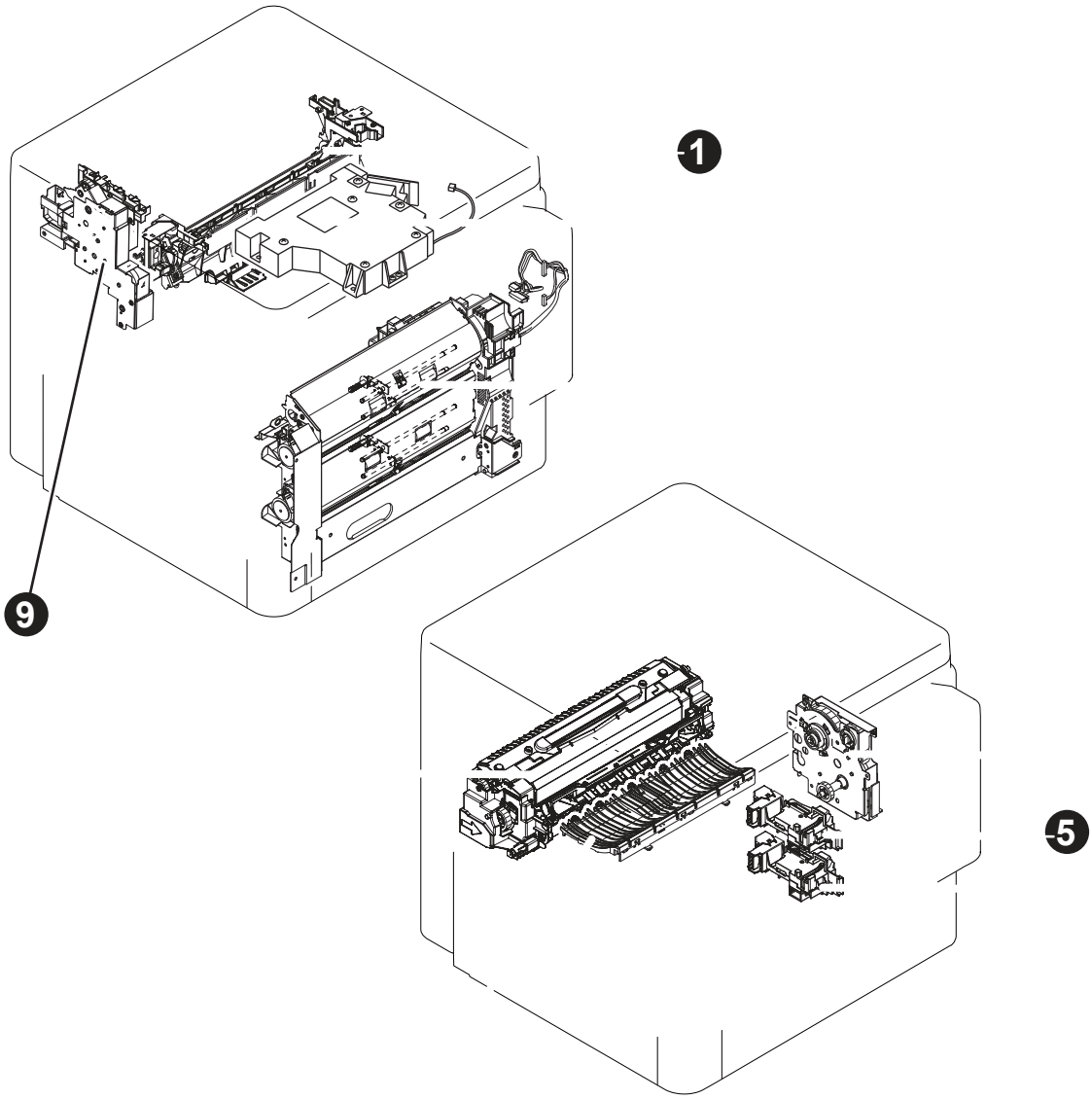

Table 2-31 Base product main assemblies (1 of 3)

Item	Description	Item	Description
1	Cartridge lifter assembly	6	Tray 3 automatic close assembly
2	Laser/scanner assembly	7	Transfer feed assembly
3	Pickup assembly	8	Fuser
4	Drum drive assembly	9	Fuser drive assembly
5	Tray 2 automatic close assembly		

Figure 2-30 Base product main assemblies (2 of 3)

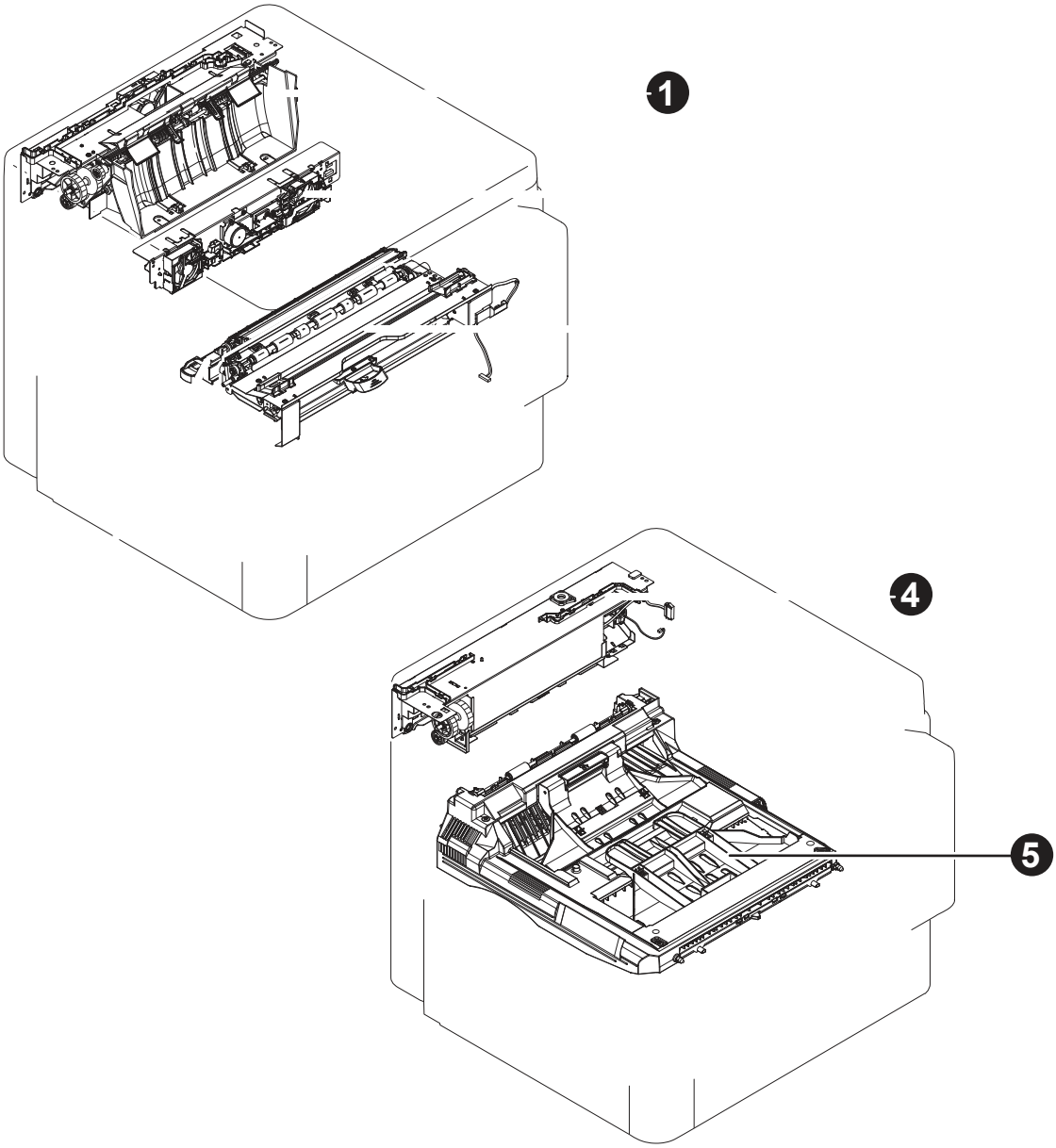

Table 2-32 Base product main assemblies (2 of 3)

Item	Description	Item	Description
1	Face down delivery assembly (M806 only)	4	Delivery assembly (M830 only)
2	Edge cooling fan assembly	5	Duplexer
3	Registration roller assembly	6	Transfer roller assembly

Figure 2-31 Base product main assemblies (3 of 3)

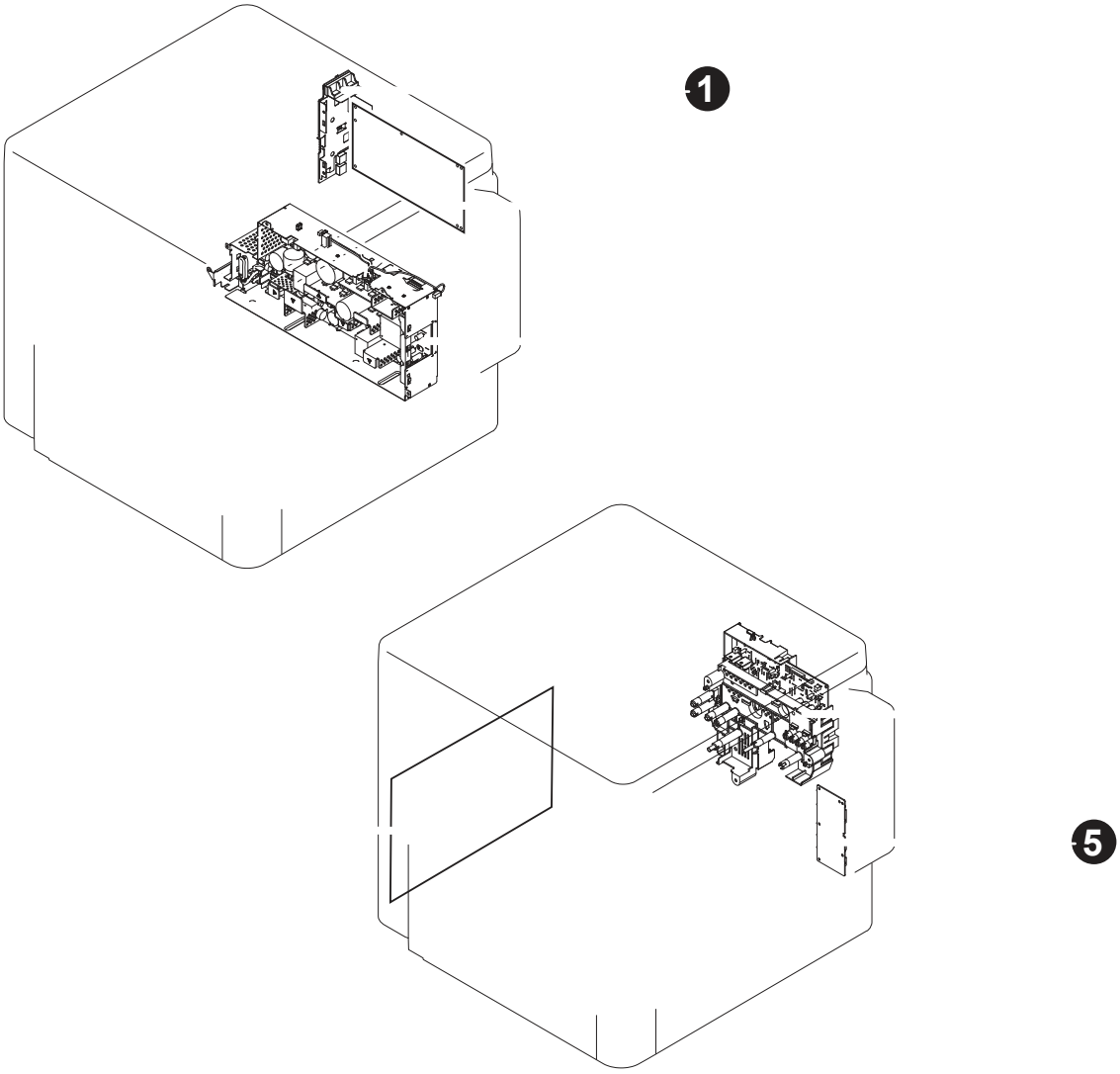

Table 2-33 Base product main assemblies (3 of 3)

Item	Description	Item	Description
1	Connector PCA	4	High-voltage power supply
2	DC controller PCA	5	Driver PCA
3	Low-voltage power supply	6	Formatter

High capacity input (HCI) feeder

Figure 2-32 High capacity input (HCI) feeder covers

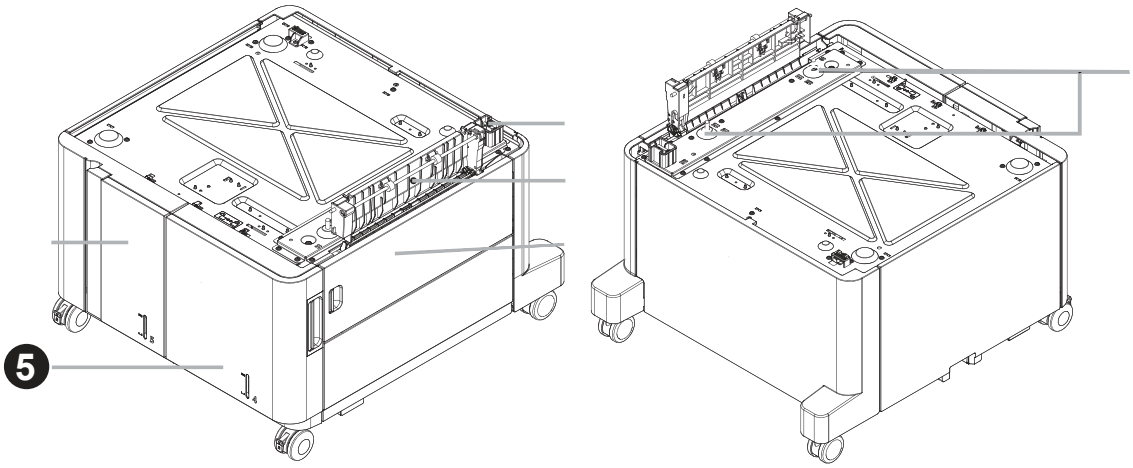

Table 2-34 High capacity input (HCI) feeder covers

Item	Description	Item	Description
1	Connector	4	Positioning pin
2	Paper path assembly	5	Right cassette
3	Right door	6	Left cassette

Figure 2-33 High capacity input (HCI) feeder main assemblies (1 of 3)

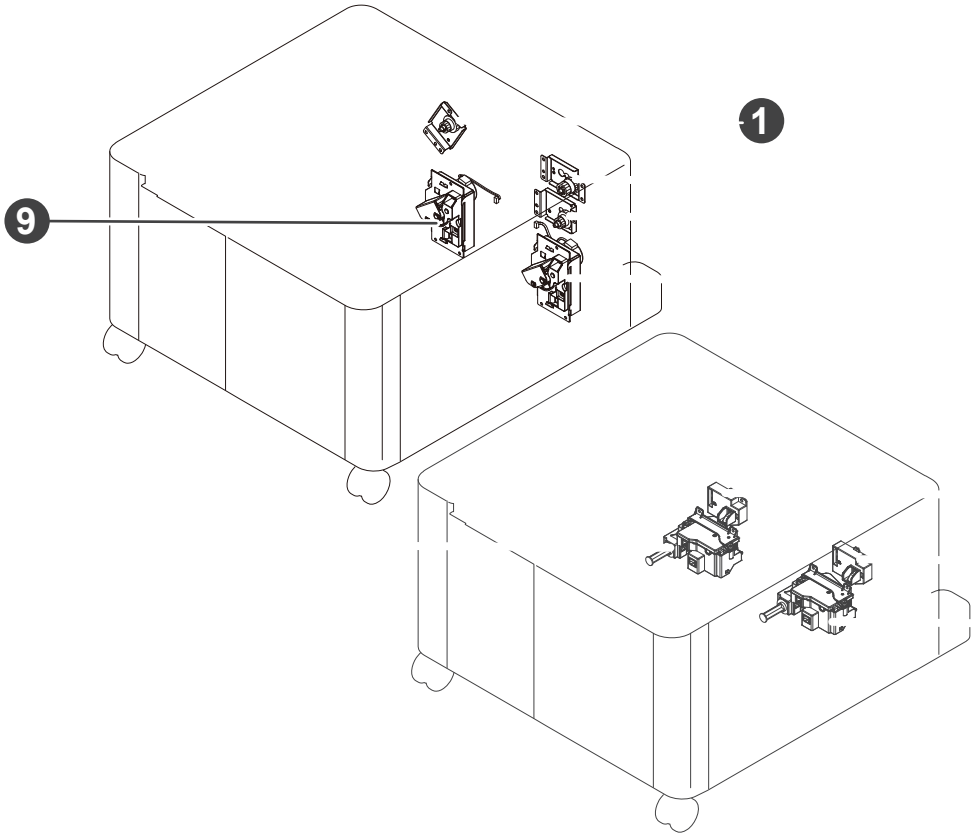

Table 2-35 High capacity input (HCI) feeder main assemblies (1 of 3)

Item	Description	Item	Description
1	Left tray pickup drive assembly	6	Right tray media-level sensor assembly
2	Merge drive assembly	7	Right tray automatic close assembly
3	Right tray pickup drive assembly	8	Left tray automatic close assembly
4	Right tray lifter drive assembly	9	Left tray lifter drive assembly
5	Left tray media-level sensor assembly		

Figure 2-34 High capacity input (HCI) feeder main assemblies (2 of 3)

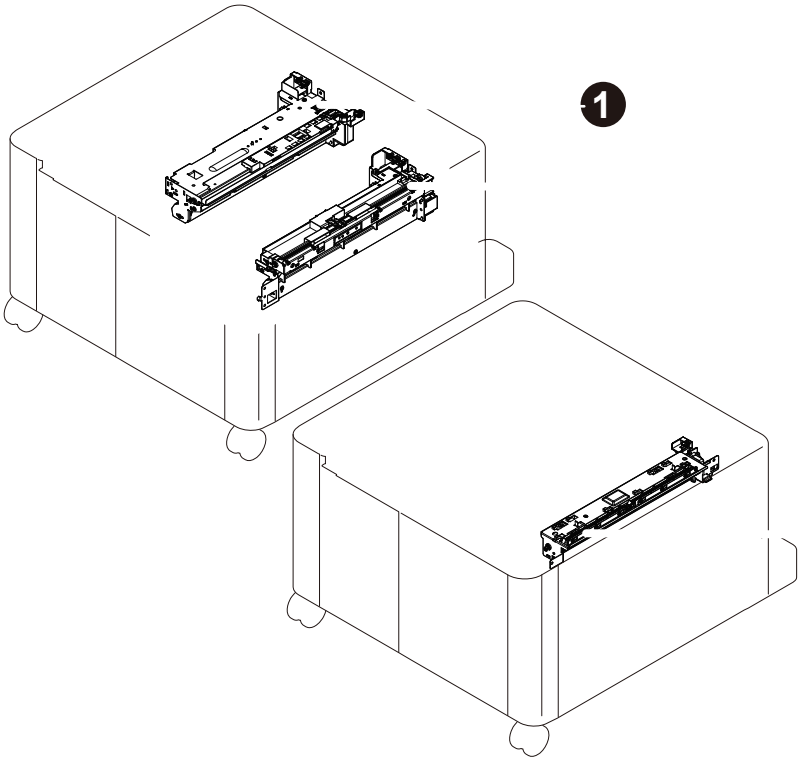

Table 2-36 High capacity input (HCI) feeder main assemblies (2 of 3)

Item	Description	Item	Description
1	Left tray pickup assembly	3	Merge assembly
2	Right tray pickup assembly		

Figure 2-35 High capacity input (HCI) feeder main assemblies (3 of 3)

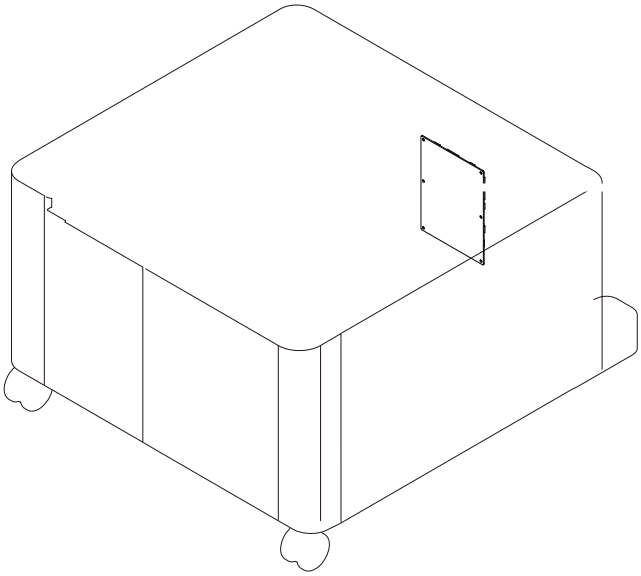

Table 2-37 High capacity input (HCI) feeder main assemblies (3 of 3)

Item	Description
1	HCI controller PCA

Finishing accessories

NOTE: Unless otherwise noted, the covers, doors, and output bins are common to all of the finishing accessories.

Figure 2-36 Stapler/stacker and stapler/stacker with hole punch covers

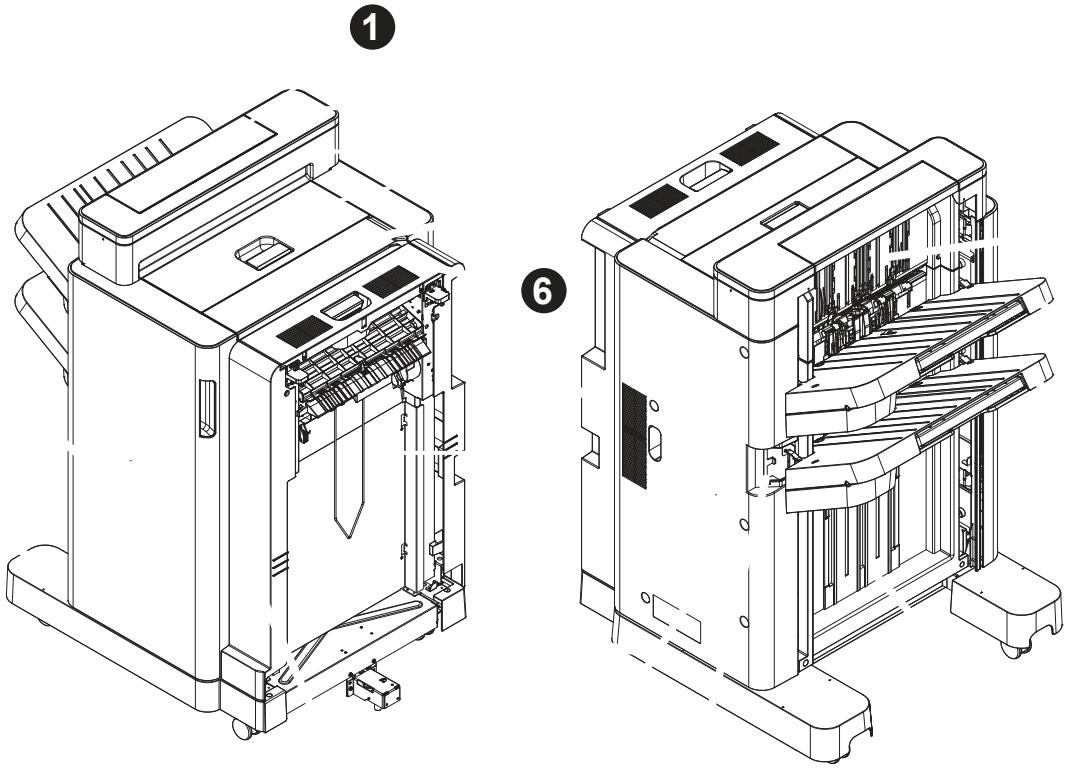

Table 2-38 Stapler/stacker and stapler/stacker with hole punch covers

Item	Description	Item	Description
1	Open/closed stepped cover	10	Rear cover
2	Upper stepped cover	11	Bin cable cover
3	Lower stepped cover	12	Pre-reverse cover
4	Upper (top) cover	13	Front foot cover
5	Punch cover NOTE: Stapler/stacker with hole punch only.	14	Front cover (door)
6	Upper reverse cover	15	Height wall assembly
7	Rear reverse cover	16	Lower bin assembly
8	Right cover	17	Upper bin assembly
9	Rear foot cover	18	Stack wall upper assembly and upper wall guide

Figure 2-37 Booklet maker only covers

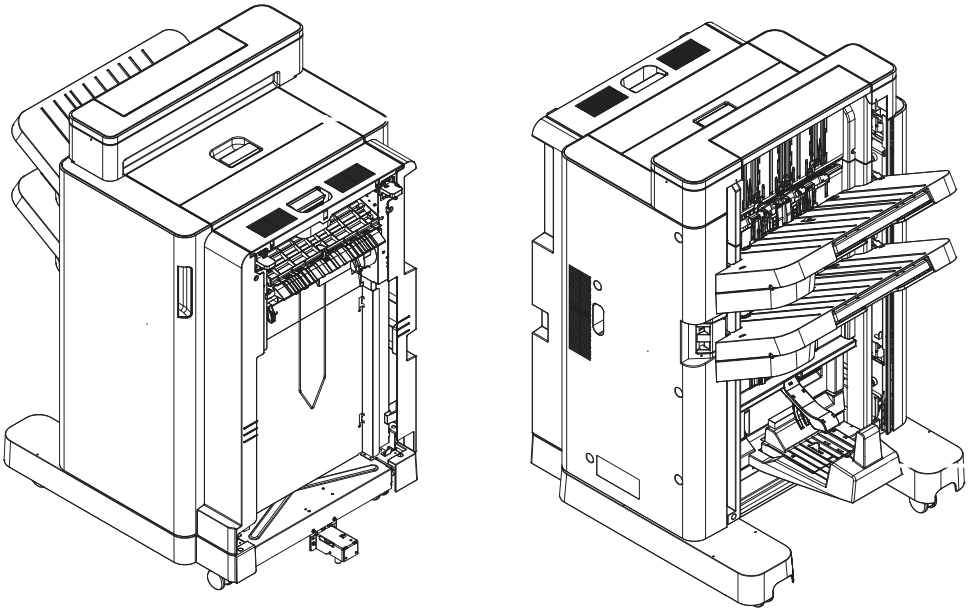

Table 2-39 Booklet maker only covers

Item	Description	Item	Description
1	Upper (top) cover with extension	2	Saddle bin assembly

Figure 2-38 Finishing accessories main assemblies

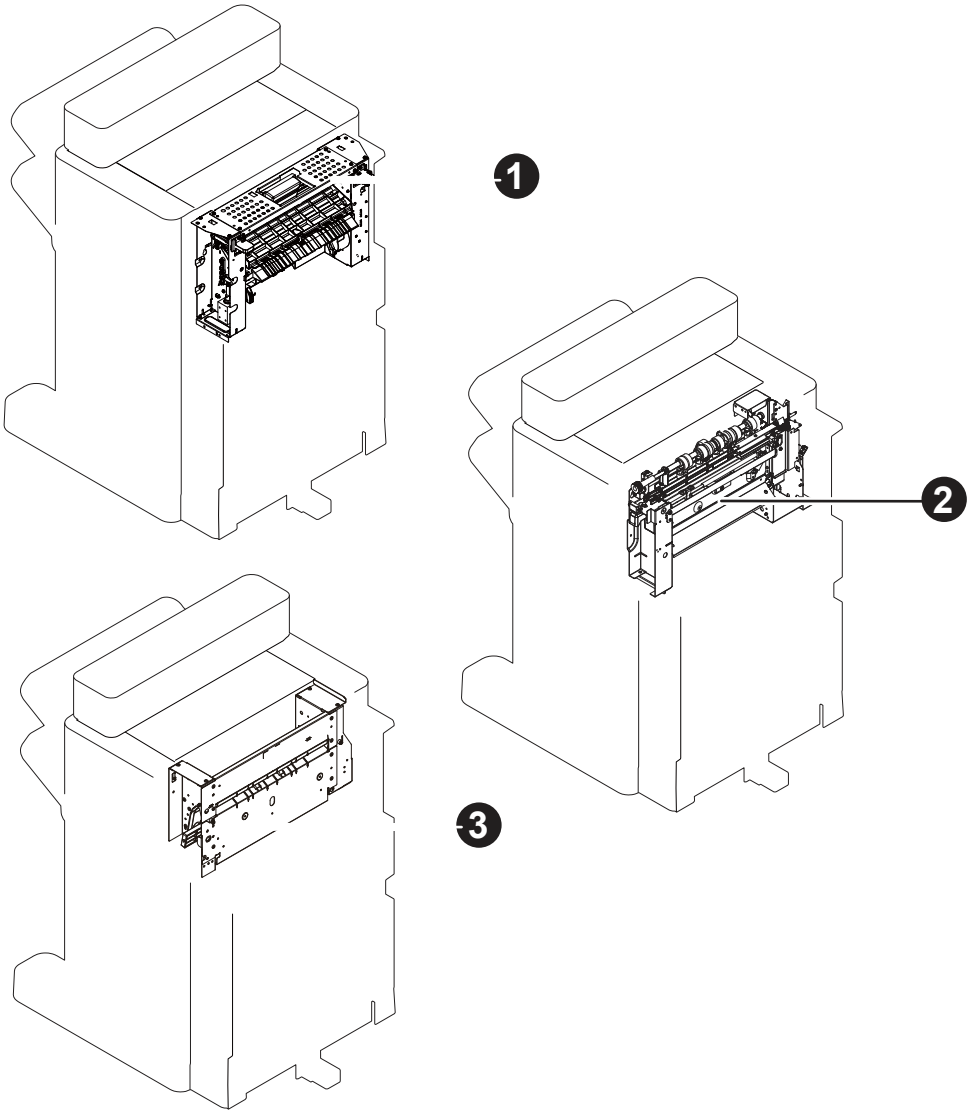

Table 2-40 Finishing accessories main assemblies

Item	Description	Item	Description
1	Switchback assembly	3	Saddle feed assembly (BM only)
2	Puncher assembly (SSHP only)		

General timing chart

Figure 2-39 General timing chart

Figure 2-40 General circuit diagram, product base (1 of 3)

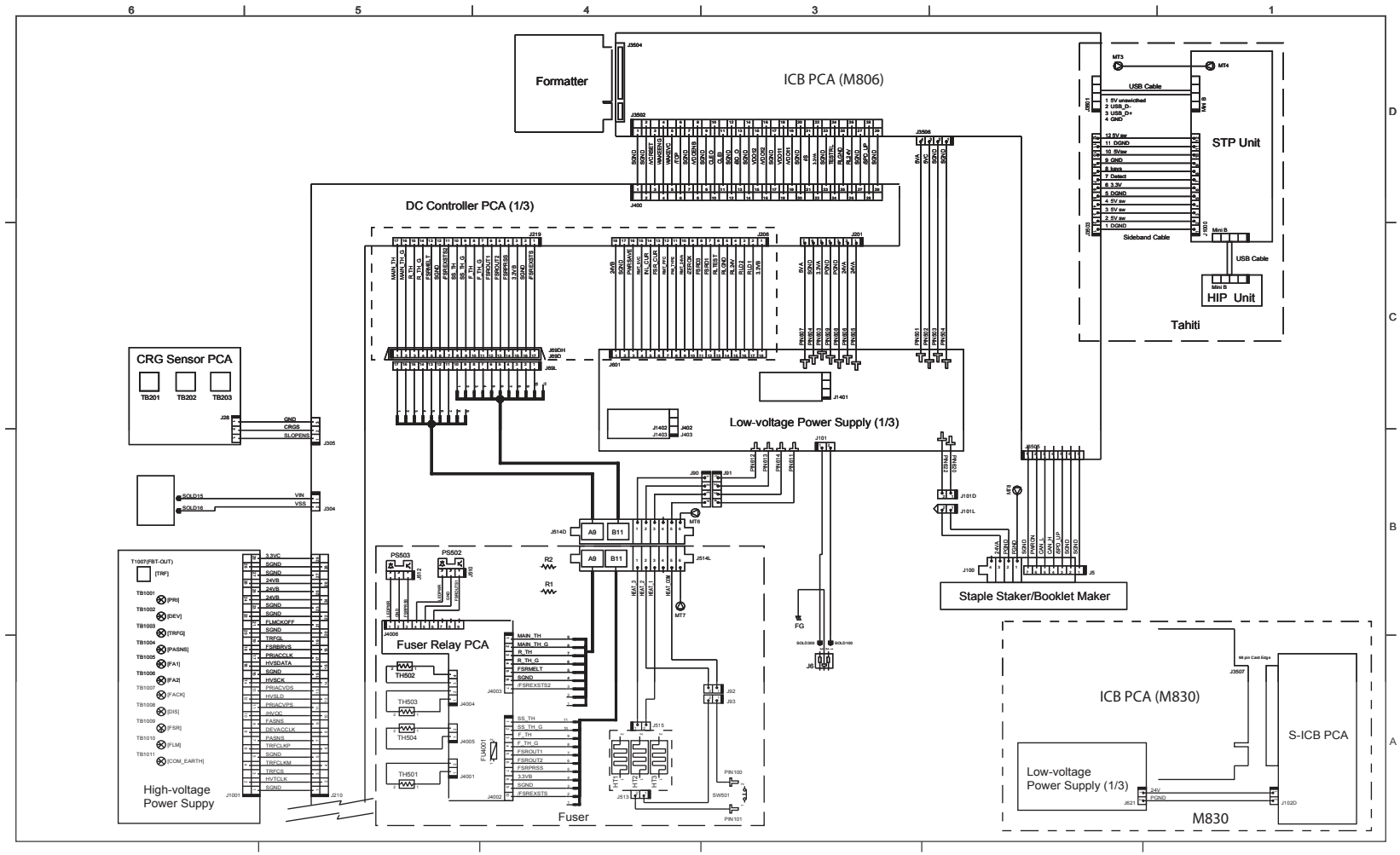

Figure 2-41 General circuit diagram, product base (2 of 3)

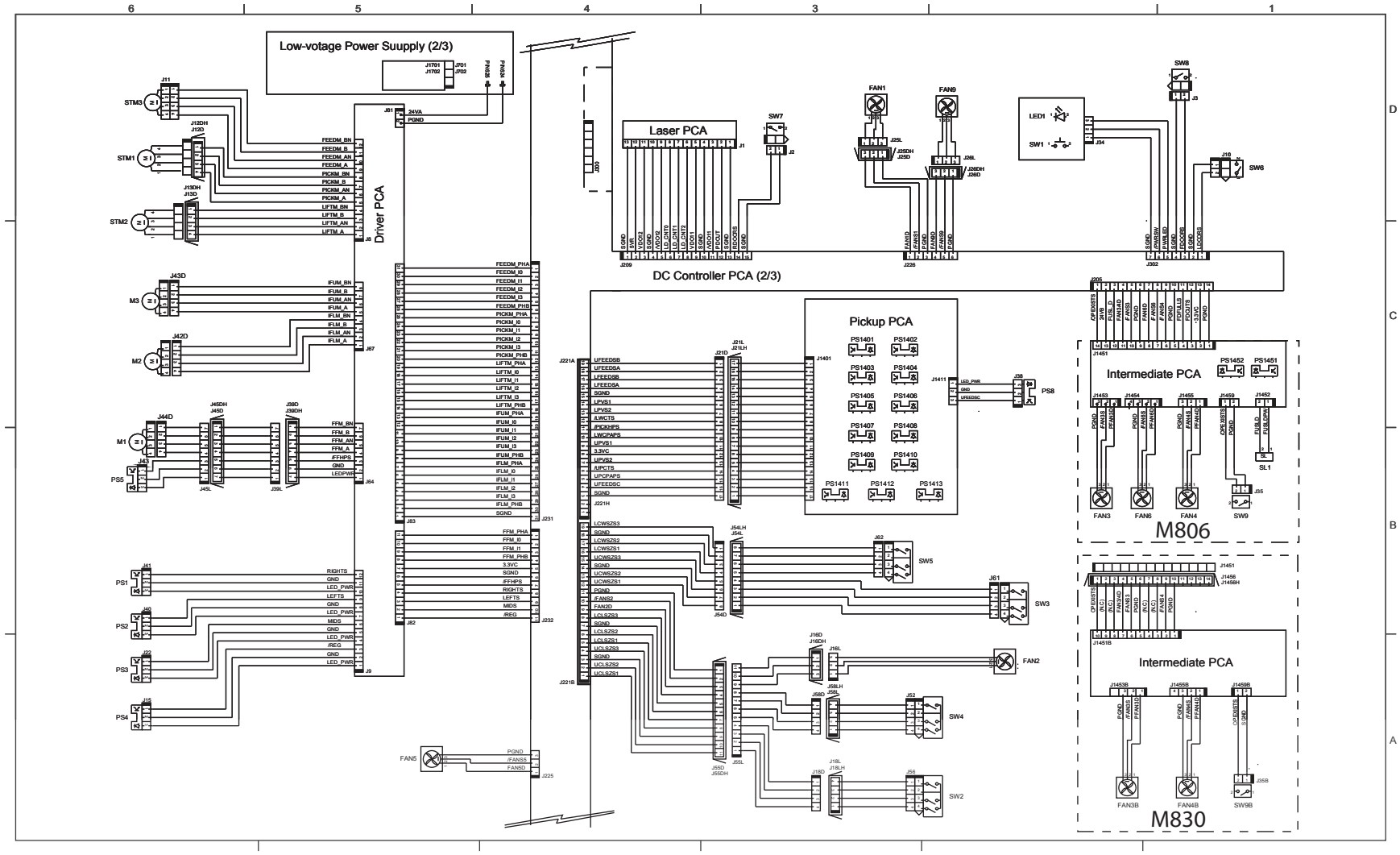

Figure 2-42 General circuit diagram, product base (3 of 3)

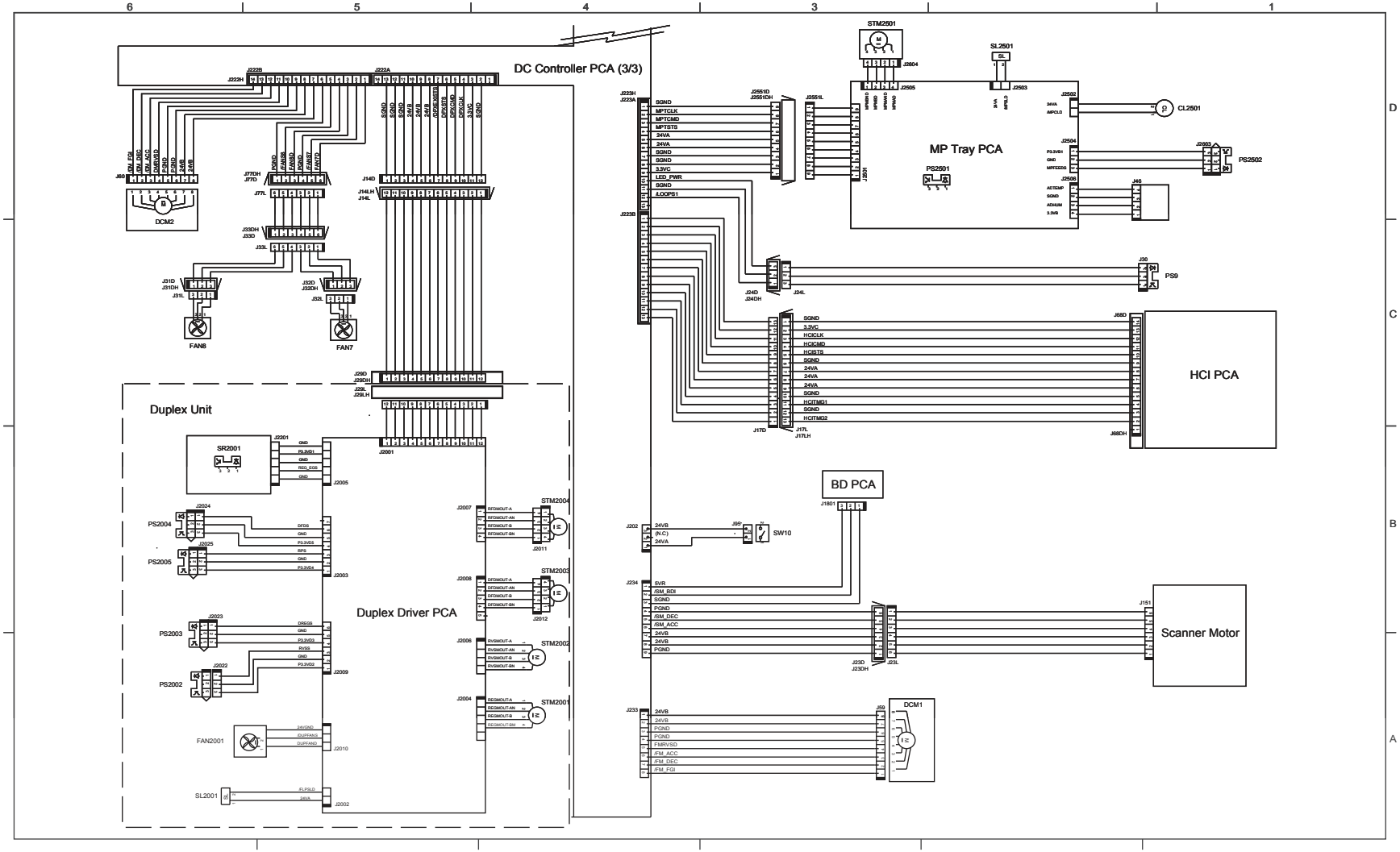

Figure 2-43 General circuit diagram, high capacity input (HCI) feeder

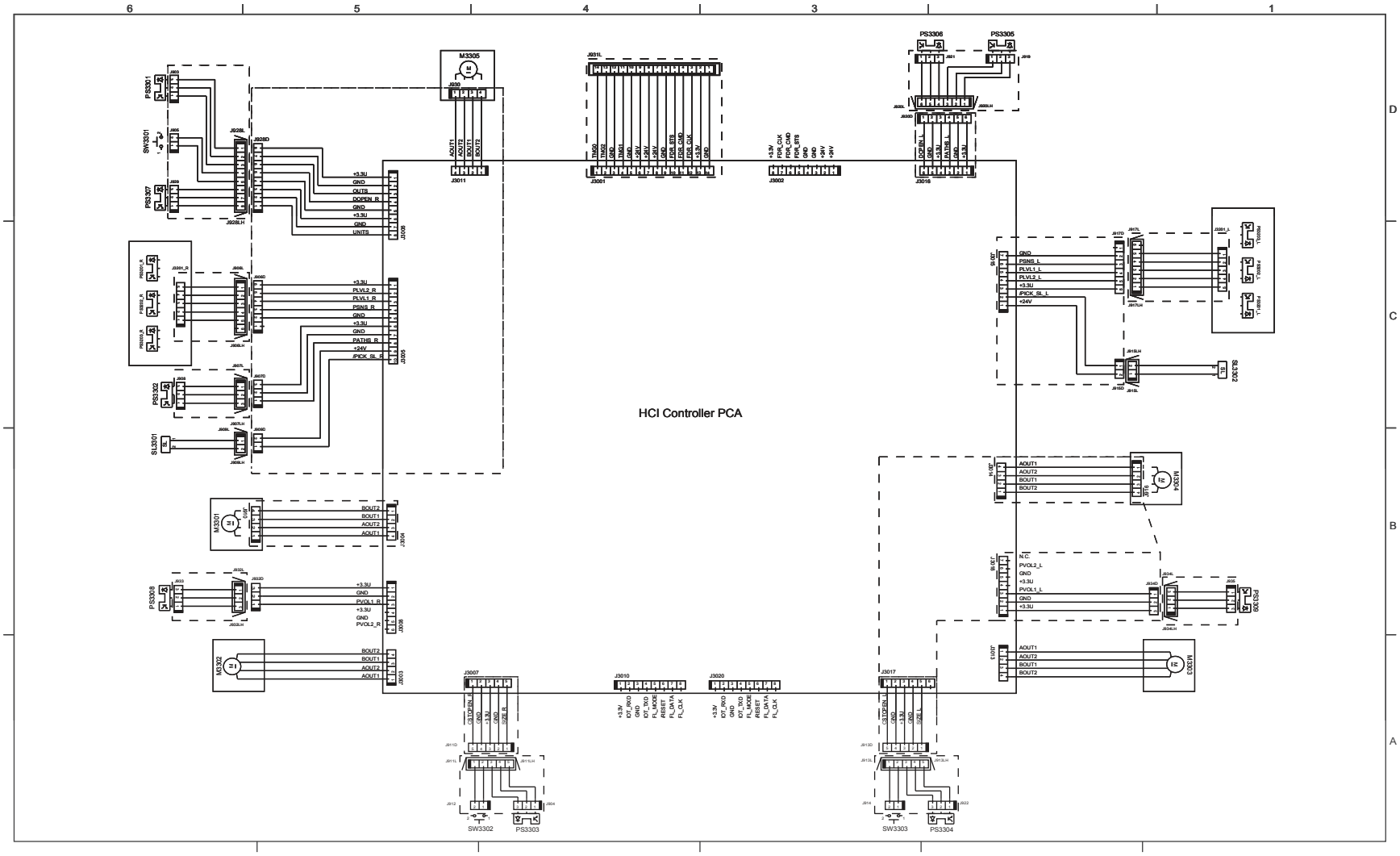

Figure 2-44 General circuit diagram, finishing accessories (1 of 6)

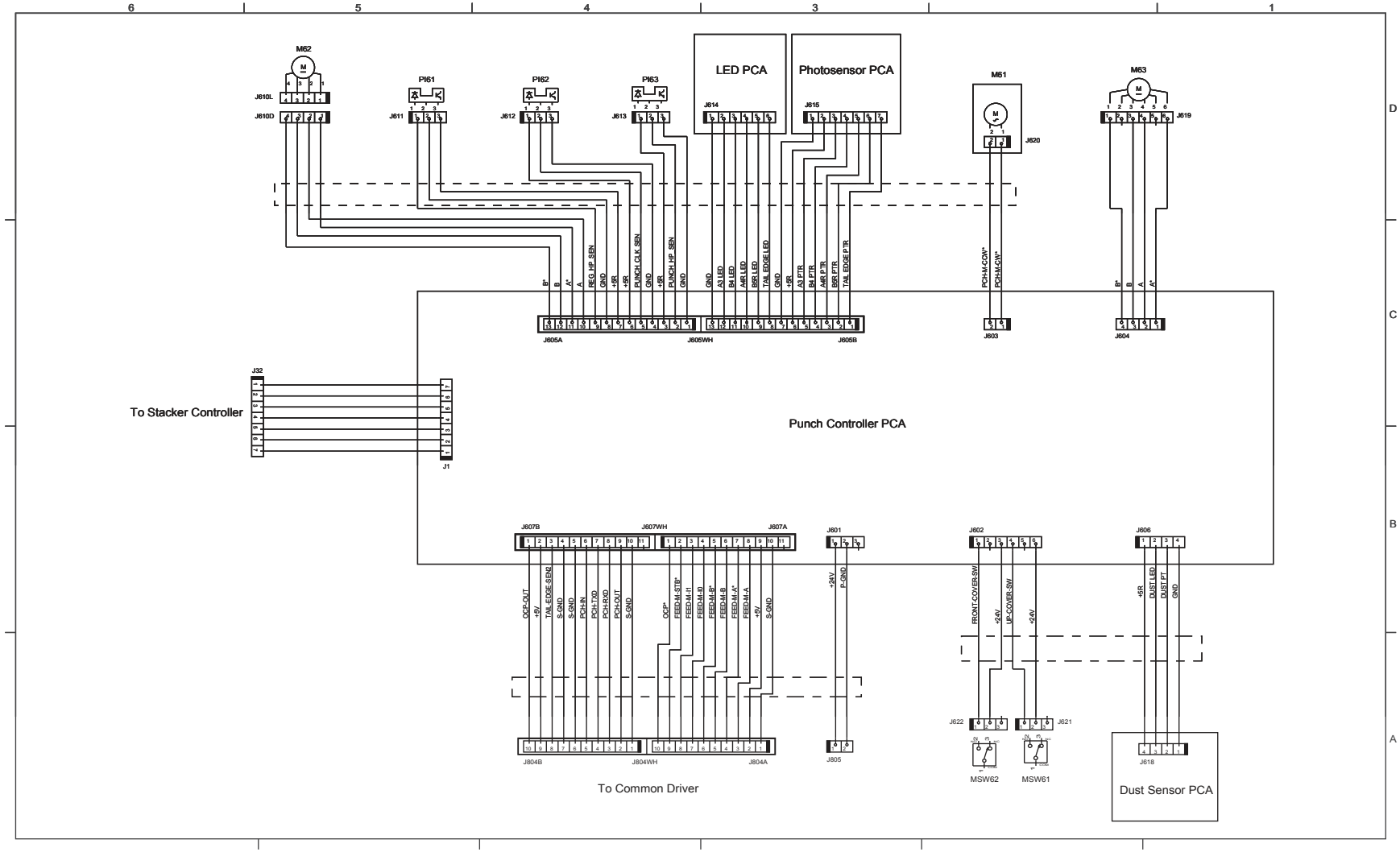

Figure 2-45 General circuit diagram, finishing accessories (2 of 6)

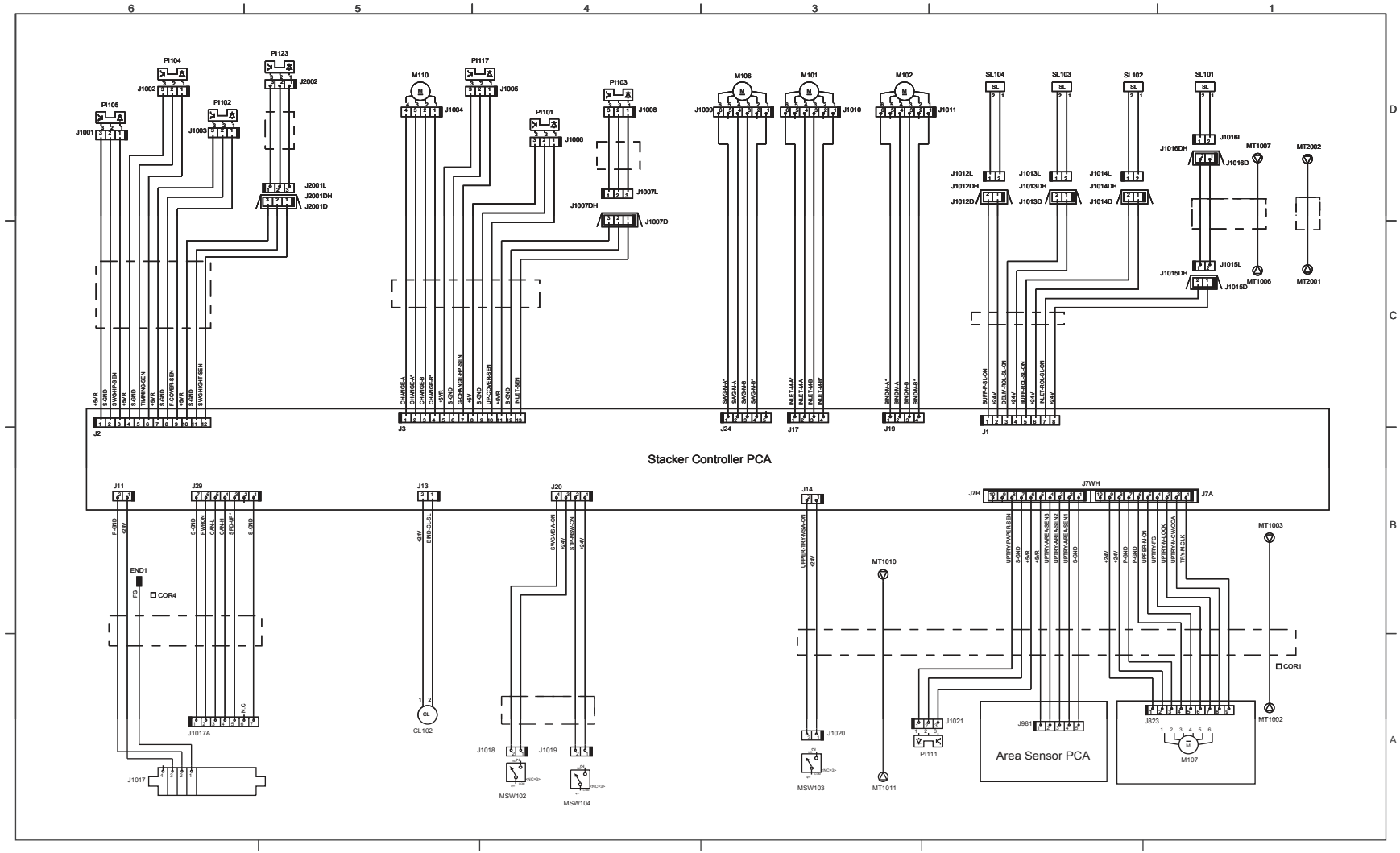

Figure 2-46 General circuit diagram, finishing accessories (3 of 6)

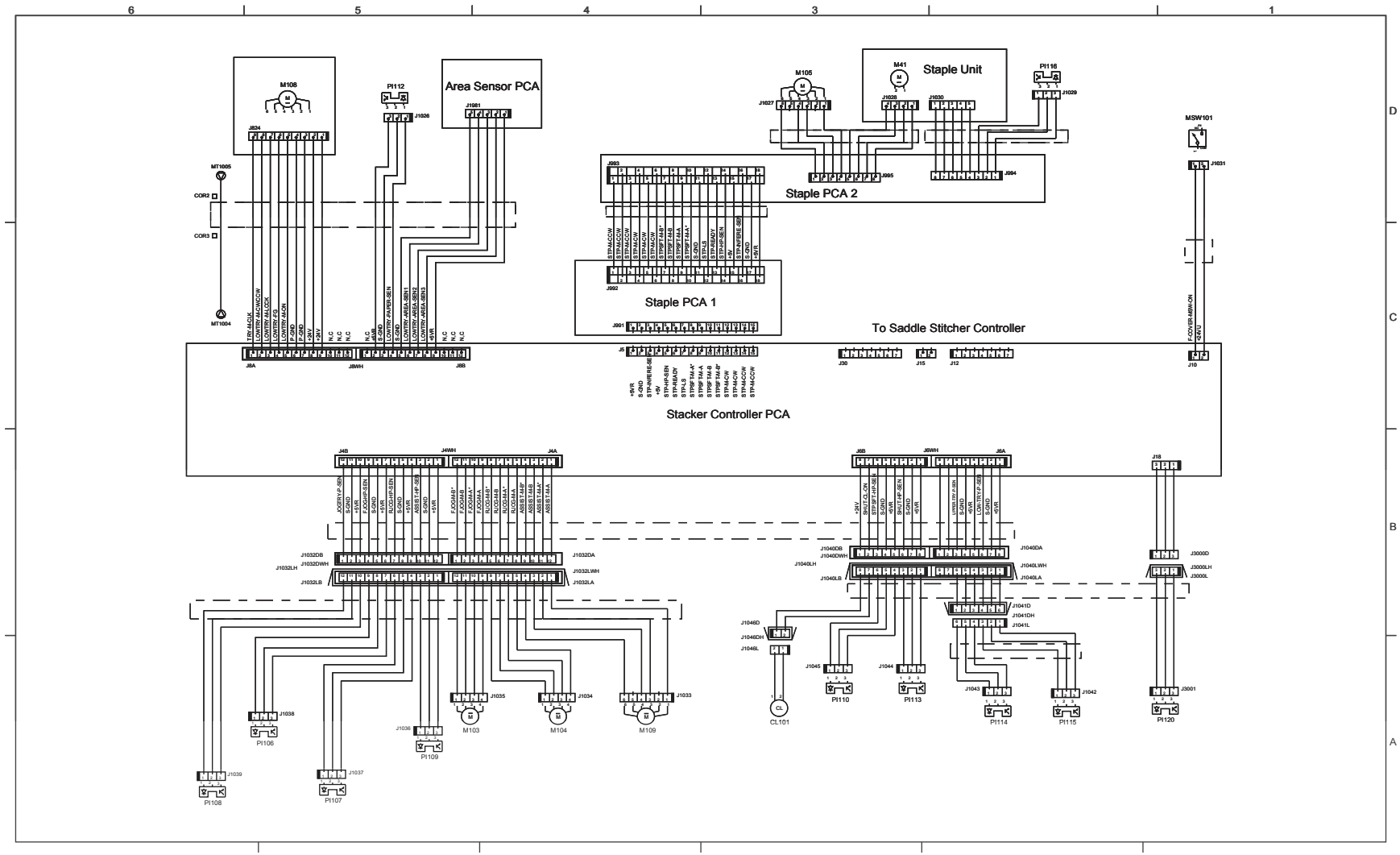

Figure 2-47 General circuit diagram, finishing accessories (4 of 6)

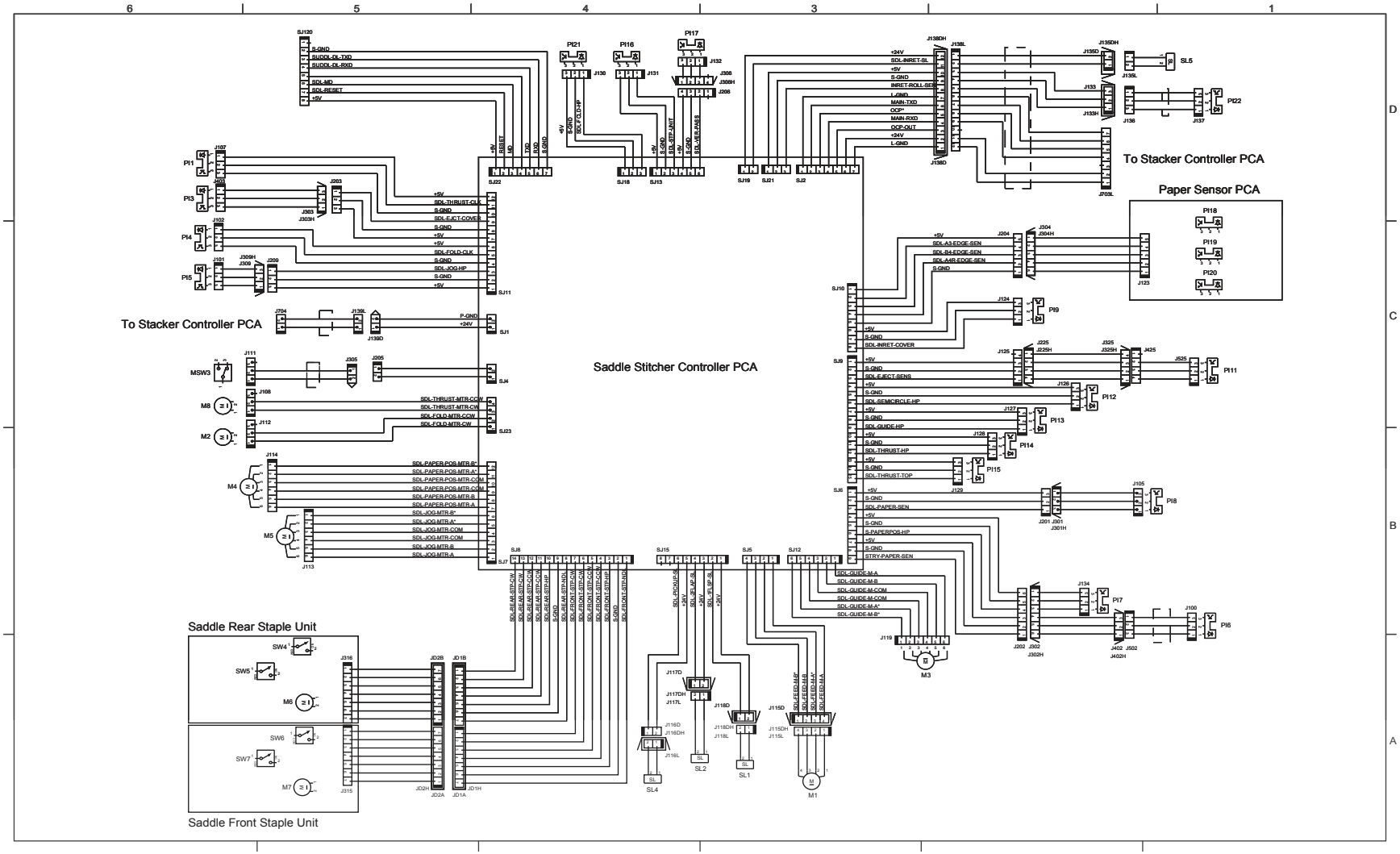

Figure 2-48 General circuit diagram, finishing accessories (5 of 6)

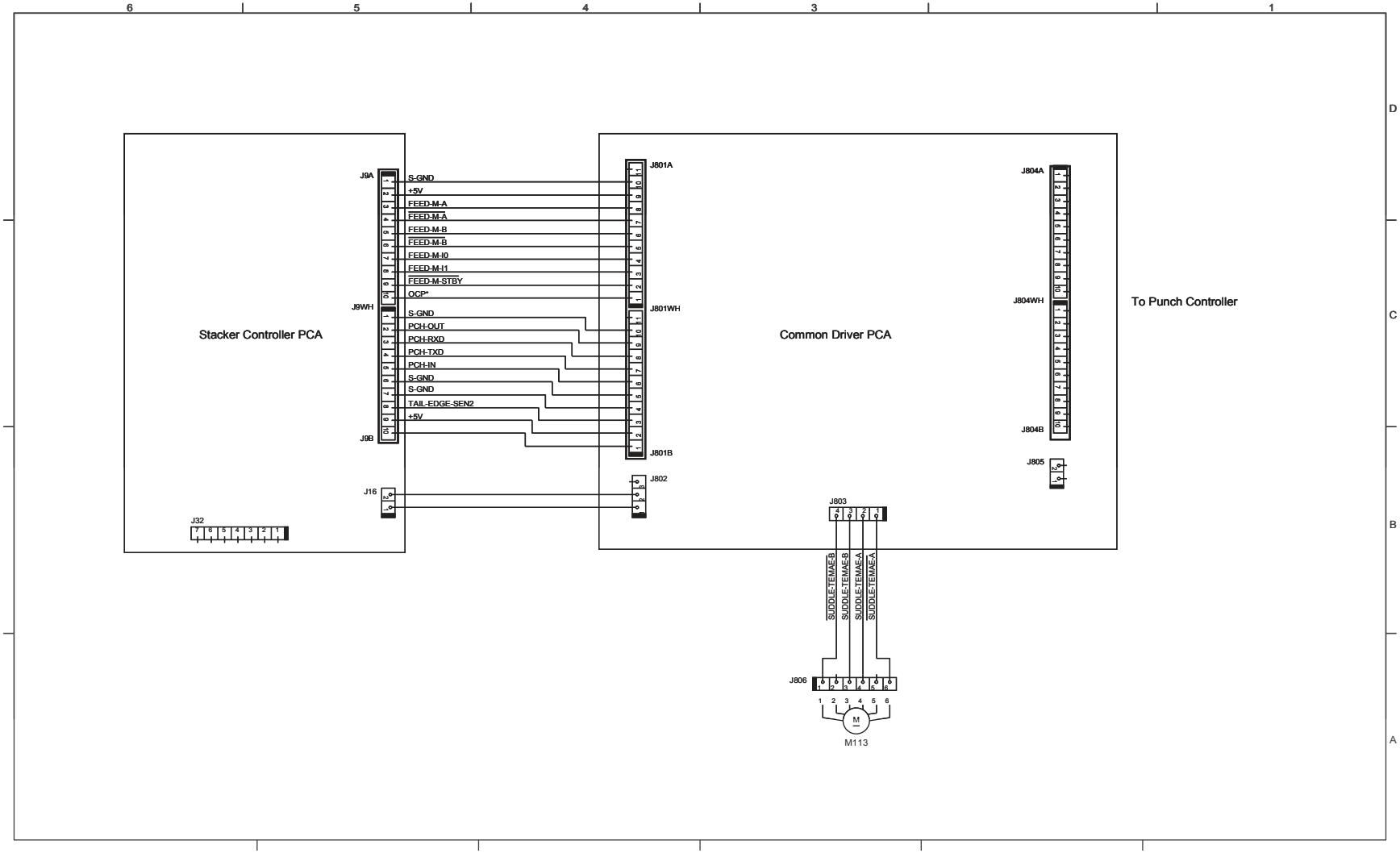

Figure 2-49 General circuit diagram, finishing accessories (6 of 6)

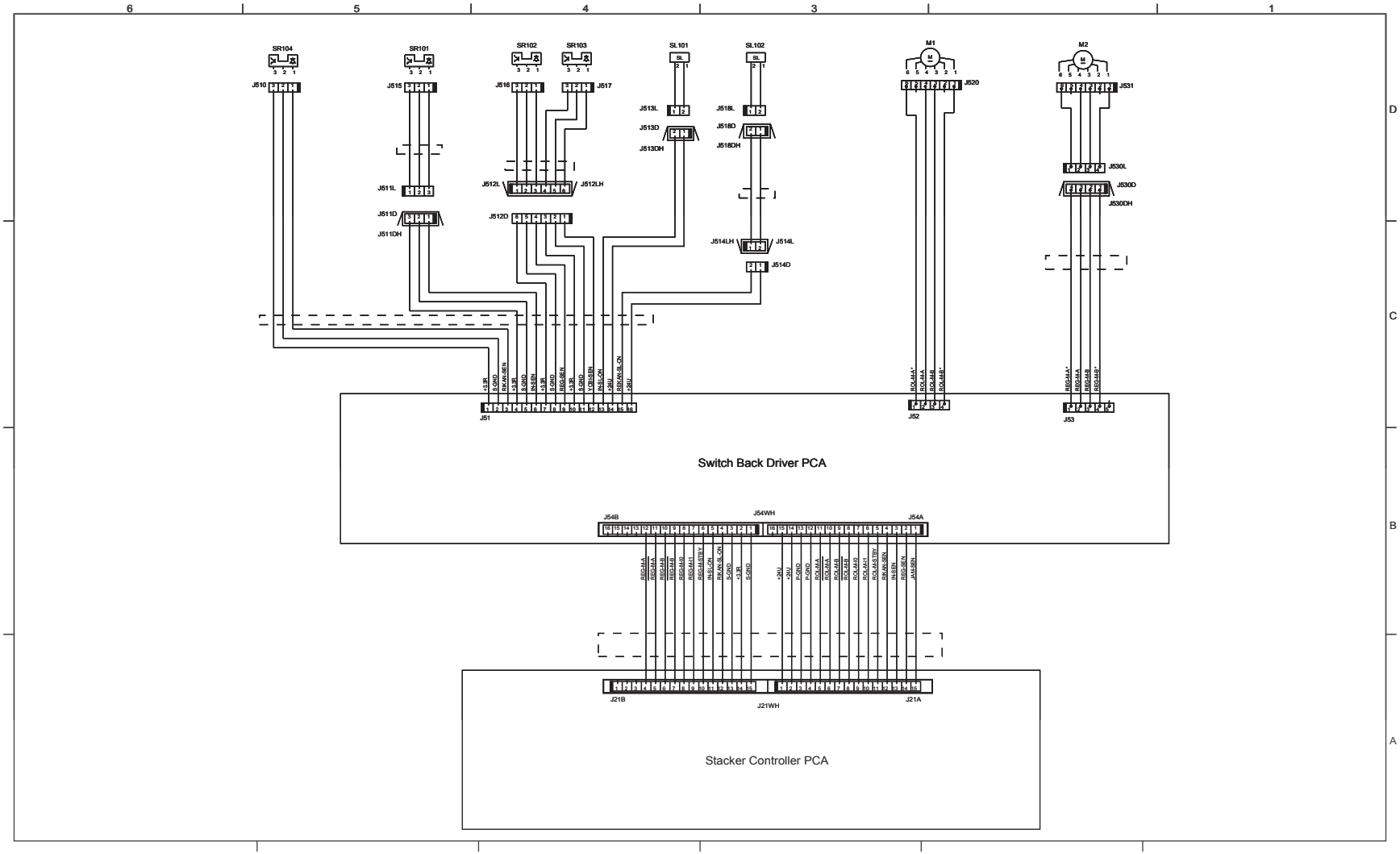

Internal print-quality test pages

Print quality troubleshooting pages

Use the print quality troubleshooting pages to help diagnose and solve print-quality problems.

NOTE: To get further assistance in print quality troubleshooting, go to www.hp.com/support/ljM806 and/or www.hp.com/support/ljflowMFPM830 and select PQ Troubleshooting Tools.

1. From the Home screen on the product control panel, scroll to and touch the Administration button.
2. Open the following menus:
   - Troubleshooting
   - Print Quality Pages
   - Print PQ Troubleshooting Page
3. Touch the Print button. The product prints a print-quality troubleshooting procedure page and a black print-quality troubleshooting page.

   Follow the instructions on the print-quality troubleshooting procedure page.

Figure 2-50 Print-quality troubleshooting procedure page

Figure 2-51 Black print-quality troubleshooting page

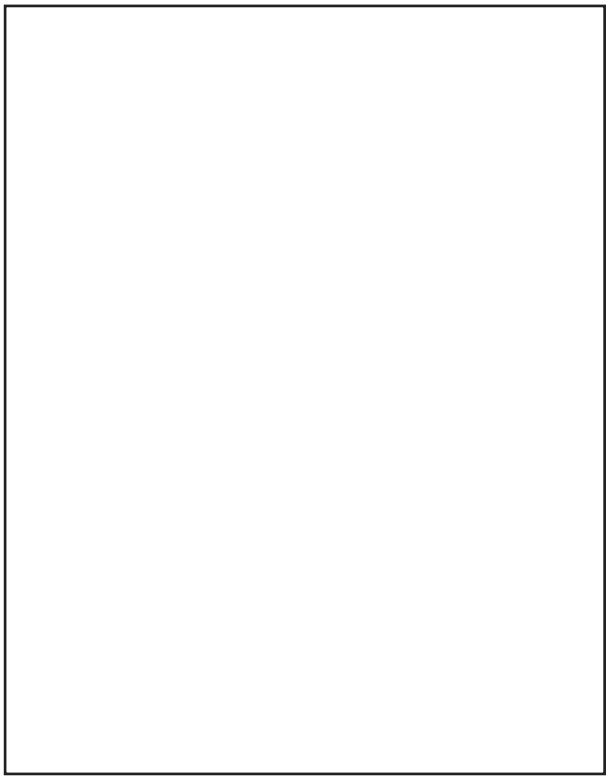

1. Grids	The grids are in inches and millimeters. They are labeled with letters and numbers so that defects can be described by position and by distance between repeats.
3. Grey scale ramp patches	Used to detect offset for the OPC or developer in the toner cartridge or offset in the fuser.

Fuser test page

Use the fuser test page to evaluate problems with fuser print quality.

1. From the Home screen on the product control panel, scroll to and touch the Administration button.
2. Open the following menus:
   - Troubleshooting
   - Print Quality Pages
   - Fuser Test Page
3. Touch the Print button.

Cleaning page

1. From the Home screen on the product control panel, scroll to and touch the Device Maintenance button.
2. Open the following menus:
   - Calibration/Cleaning
   - Cleaning Page
3. Touch the Print button to print the page.
4. The cleaning process can take several minutes. When it is finished, discard the printed page.

Enable and configure auto cleaning

Use the procedure in this section to enable and configure the automatic cleaning function.

To enable the auto cleaning function

1. From the Home screen on the product control panel, scroll to and touch the Device Maintenance button.
2. Open the following menus:
   - Calibration/Cleaning
   - Auto Cleaning
3. Select the Enable item, and then touch the Save button.

To configure the auto cleaning function

1. From the Home screen on the product control panel, scroll to and touch the Device Maintenance button.
2. Open the following menus:
   - Calibration/Cleaning
3. Open one the following menus:
   - Cleaning Interval

     Default setting: 1000 pages
   - Auto Cleaning Size

     Default setting: Letter
4. After selection an option item, touch the Save button

Print configuration page

Depending on the model, up to three pages print when you print a configuration page. In addition to the main configuration page, the HP embedded Jetdirect configuration pages print.

Configuration page

Use the configuration page to view current product settings, to help troubleshoot product problems, or to verify installation of optional accessories, such as memory (DIMMs), paper trays, and product languages.

1. From the Home screen on the product control panel, scroll to and touch the Administration button.
2. Open the following menus:
   - Reports
   - Configuration/Status Pages

3. Touch Configuration Page to select it.

4. Touch the View button to view the information on the control panel, or touch the Print button to print the pages.

NOTE: The View button is available only for the M830 product.

Figure 2-52 Configuration page

1	Device information
2	Installed personalities and options
3	HP Web services
4	Memory
5	Event log

6	Security
7	Paper trays and options

HP embedded Jetdirect page

The second configuration page is the HP embedded Jetdirect page, which contains the following information:

Always make sure the status line under the general information line indicates: **I/O Card Ready**.

Figure 2-53 HP embedded Jetdirect page

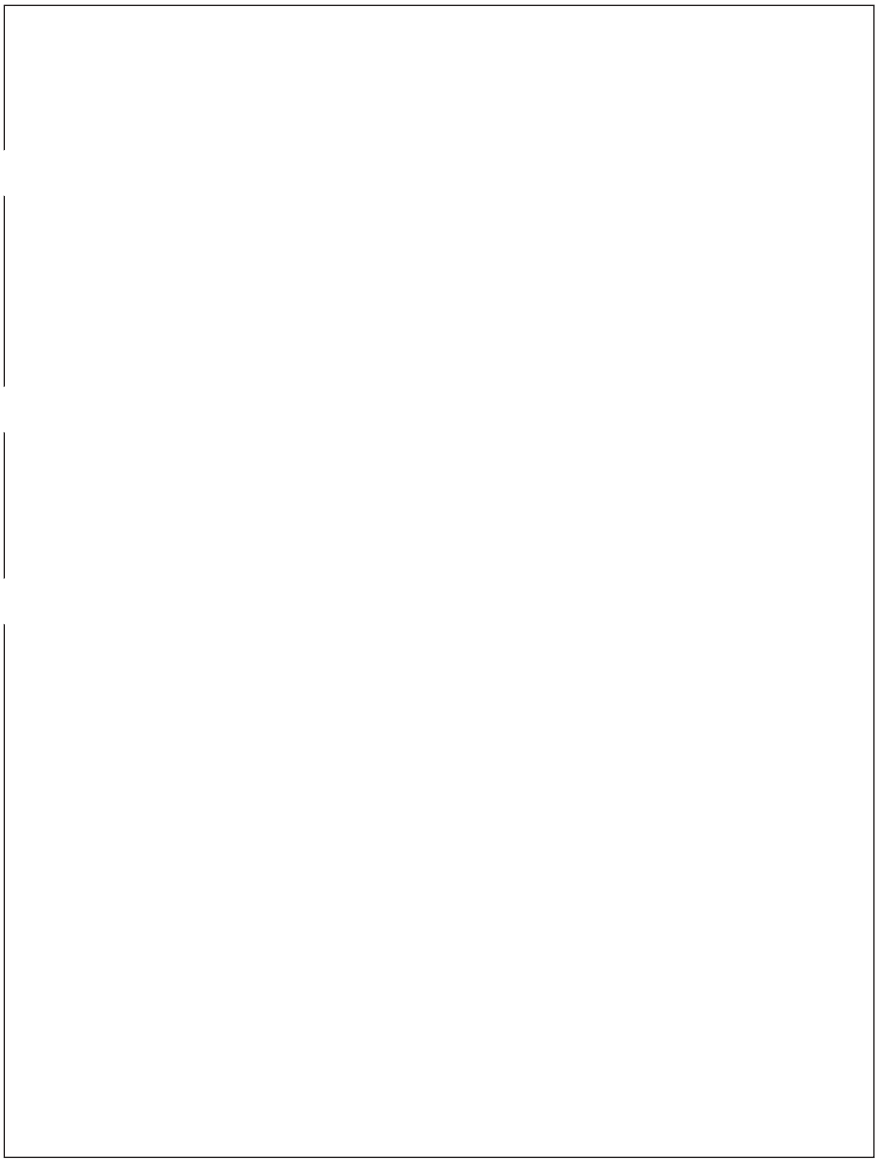

1	**General Information** indicates the product status, model number, hardware firmware version, port select, port configuration, auto negotiation, manufacturing identification, and manufactured date.
2	**Security Settings** information

3	**Network Statistics** indicates the total packets received, unicast packets received, bad packets received, framing errors received, total packets transmitted, unsendable packets, transmit collisions, and transmit late collisions.
4	**TCP/IP** information, including the IP address
5	**IPv4** information
6	**IPv6** information

Finding important information on the configuration pages

Certain information, such as the firmware date codes, the IP address, and the email gateways, is especially helpful while servicing the product. This information is on the various configuration pages.

Table 2-41 Important information on the configuration pages

Type of information	Specific information	Configuration page
Firmware date codes When you use the remote firmware upgrade procedure, all of these firmware components are upgraded.	DC controller	Look on the main configuration page, under “Device Information.”
	Firmware datecode	Look on the main configuration page, under “Device Information.”
	HP embedded Jetdirect firmware version	Look on the HP embedded Jetdirect page, under “General Information.”
Accessories and internal storage All optional devices that are installed on the product should be listed on the main configuration page. In addition, separate pages print for the optional paper handling devices and the fax accessory. These pages list more-detailed information for those devices.	Embedded HP Jetdirect	Look on the main configuration page, under “Installed Personalities and Options.” Shows model and ID.
	Total RAM	Look on the main configuration page, under “Memory.”
	Duplex unit	Look on the main configuration page, under “Paper Trays and Options.”
Finishing accessories	Installed finishing accessory type	Look on the main configuration page, under “Paper Trays and Options.”
Engine cycles and event logs Total page counts and maintenance kit counts are important for ongoing product maintenance. The configuration page lists only the three most recent errors. To see a list of the 50 most recent errors, print an event log from the Diagnostics menu.	Engine cycles	Look on the main configuration page, under “Device Information.”
Event-log information	Event-log information	Look on the main configuration page, under “Event Log.”

Print quality troubleshooting tools

Repetitive defects ruler

Use a ruler to measure occurrences of repetitive image defects to help solve image-quality problems. Place the ruler next to the first occurrence of the defect on the page. Find the distance between identical defects and use the table below to identify the component that is causing the defect.

Distance between defects	Product components that cause the defect
44 mm	Primary charging roller[2]
45 mm	Face-down delivery roller[1]
44 mm	Product: primary transfer roller
50 mm	Duplex inlet roller
	Duplex switchback roller
	Duplex registration roller
	Duplex feed roller
	Duplex re-pickup roller
	Registration roller
51 mm	Intermediate delivery roller[1]
54 mm	Secondary transfer roller
57 mm	Fuser delivery roller
	Face-up delivery roller
63 mm	Developing roller[2]
	HCI cassette pickup roller
69 mm	Pressure roller
75 mm	Cassette pickup roller
	Fuser sleeve
77 mm	Tray 1 separation roller
	Tray 1 feed roller
	HCI cassette separation roller
	HCI cassette feed roller
82 mm	Tray 1 pickup roller
94 mm	Cassette separation roller
	Cassette feed roller
	Photosensitive drum[2]

1 M806 product only

2 The primary charging roller, photosensitive drum, and developing roller cannot be cleaned because they are internal assemblies in the toner cartridge. If one of these assemblies is causing the defect, replace the toner cartridge.

Control-panel menus

Administration menu

You can perform basic product setup by using the Administration menu. Use the HP Embedded Web Server for more advanced product setup. To open the HP Embedded Web Server, enter the product IP address or host name in the address bar of a Web browser.

Reports menu

To display: At the product control panel, select the Administration menu, and then select the Reports menu.

Table 2-42 Reports menu

First level	Second level	Values	Description
Configuration/Status Pages	Administration Menu Map	Print View	Shows a map of the entire Administration menu and the selected values for each setting.
	Current Settings Page	Print View	Print a summary of the current settings for the product. This might be helpful if you plan to make changes and need a record of the present configuration.
	Configuration Page	Print View	Shows the product settings and installed accessories.
	Supplies Status Page	Print View	Shows the approximate remaining life for the supplies; reports statistics on total number of pages and jobs processed, serial number, page counts, and maintenance information. HP provides approximations of the remaining life for the supplies as a customer convenience. The actual remaining supply levels might be different than the approximations provided.
	Usage Page	Print View	Shows a count of all paper sizes that have passed through the product; lists whether they were simplex, duplex, monochrome, or color; and reports the page count.
	File Directory Page	Print View	Shows the file name and folder name for files that are stored in the product memory.
	Web Services Status Page	Print View	Shows the detected Web Services for the product.

Table 2-42 Reports menu (continued)

First level	Second level	Values	Description
Fax Reports (M830 only)	Fax Activity Log	Print View	Contains a list of the faxes that have been sent from or received by this product.
	Billing Codes Report	Print View	Provides a list of billing codes that have been used for outgoing faxes. This report shows how many sent faxes were billed to each code.
	Blocked Fax List	Print View	A list of phone numbers that are blocked from sending faxes to this product.
	Speed Dial List	Print View	Shows the speed dials that have been set up for this product.
	Fax Call Report	Print View	A detailed report of the last fax operation, either sent or received.
Other Pages	PCL Font List	Print	Prints the available PCL fonts.
	PS Font List	Print	Prints the available PS fonts.

General Settings menu

To display: At the product control panel, select the Administration menu, and then select the General Settings menu.

In the following table, asterisks (*) indicate the factory default setting.

Table 2-43 General Settings menu

First level	Second level	Third level	Fourth level	Values	Description
Date/Time Settings	Date/Time Format	Date Format		DD/MMM/YYYY MMM/DD/YYYY YYYY/MMM/DD	Use the Date/Time Settings menu to specify the date and time and to configure date/time settings.
		Time Format		12 hour (AM/PM) 24 hours	Select the format that the product uses to show the date and time, for example 12-hour format or 24-hour format.
	Date/Time	Time Zone		Select the time zone from a list.	
		Date		Select the date from a pop-up calendar.	
		Time		Select the time from a pop-up keypad.	
		Adjust for Daylight Savings		Checkbox	If you are in an area that uses daylight savings time, select the Adjust for Daylight Savings box.

Table 2-43 General Settings menu (continued)

First level	Second level	Third level	Fourth level	Values	Description
Energy Settings M830 product	Sleep Schedule	A list of scheduled events displays.		+ (Add) Edit Delete	Use to configure the product to automatically wake up or go to sleep at specific times on specific days. Using this feature saves energy. NOTE: You must configure the date and time settings before you can use this feature.
			Event Type	Wake Sleep	Select whether to add or edit a Wake event or a Sleep event, and then select the time and the days for the wake or sleep event.
			Event Time		
			Event Days	Select days of the week from a list.	
	Sleep Timer Settings	Sleep Mode/Auto Off After		Range: 1 to 120 minutes Default = 60 minutes	Set the number of minutes after which the product enters Sleep or Auto Off mode. Use the arrow buttons on the control panel to increase or decrease the number of minutes.
	Wake/Auto On to These Events			All Events* Network port Power button only	
Energy Settings M806 product	Sleep Timer Settings	Sleep/Auto Off Timer		Enabled* Disabled	Enable or disable the product sleep or auto off function.
		Sleep Mode/Auto Off After		Range: 1 to 120 minutes Default = 60 minutes	Set the number of minutes after which the product enters Sleep or Auto Off mode. Use the arrow buttons on the control panel to increase or decrease the number of minutes.

Table 2-43 General Settings menu (continued)

First level	Second level	Third level	Fourth level	Values	Description
Print Quality	Image Registration	Adjust Tray <X>	Print Test Page		Shift the margin alignment to center the image on the page from top to bottom and from left to right. You can also align the image on the front with the image printed on the back. Use the Adjust Tray <X> menu to adjust the registration settings for each tray. Before adjusting these values, print a registration test page. It provides alignment guides in the X and Y directions so you can determine which adjustments are necessary. You can adjust values for X1 Shift, X2 Shift, Y1 Shift, and Y2 Shift. Use the Print Test Page option to print a page to test the image registration. It provides alignment guides in the X and Y directions so you can determine which adjustments are necessary.

Table 2-43 General Settings menu (continued)

First level	Second level	Third level	Fourth level	Values	Description
			X1 Shift Y1 Shift X2 Shift Y2 Shift	-5.00 mm to 5.00 mm	The direction that is perpendicular to the way the paper passes through the product is referred to as X. This is also known as the scan direction. X1 is the scan direction for a single-sided page or for the second side of a two-sided page. X2 is the scan direction for the first side of a two-sided page. The direction that the paper feeds through the product is referred to as Y. Y1 is the feed direction for a single-sided page or for the second side of a two-sided page. Y2 is the feed direction for the first side of a two-sided page.
	Adjust Paper Types	Select from a list of paper types that the product supports. The available options are the same for each paper type.	Print Mode	Select from a list of print modes.	Changing the Print Mode setting is usually the first thing to try to resolve print-quality problems. Problems can include toner not sticking well to the page, a faint image of the page repeated on the same or following page, incorrect gloss level, etc.
			Resistance Mode	Normal Up Down	Use this setting to correct print quality problems in low-humidity environments and highly resistive paper. Use the Up option to solve print quality problems that are related to poor toner-transfer. Use the Down option in the event that small, “pin-hole” defects occur.

Table 2-43 General Settings menu (continued)

First level	Second level	Third level	Fourth level	Values	Description
			Humidity Mode M830 only	Normal Alternate 1 Alternate 2 Alternate 3	
			Line Detail M830 only	Normal Alternate 1 Off	
			Separation Mode M806 only	Normal* Alternate	Use the Alternate setting when you are having problems with light-weight paper during duplex print jobs.
			Pre-Rotation Mode M806 only	Off On*	
			Fuser Temp Mode M806 only	Up Down Normal*	Use this feature to eliminate ghost images on printed pages.
			Paper Curl Mode M806 only	Normal* Alternate 1 Alternate 2 Alternate 3	Use this setting to reduce paper curl in print jobs.
	Optimize	Environment M830 only		Normal* Low Temp	Enable if the product is operating in a low temperature environment and you are having problems with print quality such as blisters in the printed image.
		Line Detail M806 only		Normal* Alternate 1 Off	Use this setting if you have scattered lines in printed pages.
		Restore Optimize			Use to return all the settings in the Optimize menu to the factory-default values.

Table 2-43 General Settings menu (continued)

First level	Second level	Third level	Fourth level	Values	Description
	Resolution			300 x 300 dpi* (M830 only) 600 x 600 dpi* FastRes 1200 ProRes 1200	Sets the resolution at which the product prints.
	REt			On Off	Use this setting to enable or disable Resolution Enhancement technology (REt), which produces smoother angles, curves, and edges.
	Economode			On Off	Use this setting to enable or disable the Economode feature, which conserves toner.
	Toner density			Lighter print (M830) Darker print (M830) Range: 1 to 5 (M806; default: 3)	

Table 2-43 General Settings menu (continued)

First level	Second level	Third level	Fourth level	Values	Description
Jam Recovery				Auto* Off On	This product provides a jam recovery feature that reprints jammed pages. Select one of the following options: Auto: The product attempts to reprint jammed pages when sufficient memory is available. This is the default setting. Off: The product does not attempt to reprint jammed pages. Because no memory is used to store the most recent pages, performance is optimal. NOTE: When using this option, if the product runs out of paper and the job is being printed on both sides, some pages can be lost. On: The product always reprints jammed pages. Additional memory is allocated to store the last few pages printed. This might cause overall performance to suffer.
Auto Recovery				Enabled Disabled*	The product attempts to reprint jammed pages when sufficient memory is available. This is the default setting.

Table 2-43 General Settings menu (continued)

First level	Second level	Third level	Fourth level	Values	Description
Manage Stored Jobs	Sort Stored Jobs By			Job Name* Date	This option allows you list the jobs either Alphabetically or Chronologically.
	Quick Copy Job Held Timeout			Off* 1 Hour 4 Hours 1 Day 1 Week	Sets a maximum storage-time limit for stored Quick Copy and Proof and Hold jobs. If a stored job is not printed during this period, it is deleted.
	Quick Copy Job Storage Limit			1-100 Default = 32	Configure global settings for jobs that are stored in the product memory. The Quick Copy Job Storage Limit feature specifies the number of Quick Copy and Proof and Hold jobs that can be stored on the product. The maximum allowed value is 100.
	Default Folder Name				Type the name for the stored jobs folder that is accessible to all users.
Enable Retrieve from USB				Enabled Disabled*	Enables the product to open a file from a USB drive.

Table 2-43 General Settings menu (continued)

First level	Second level	Third level	Fourth level	Values	Description
Hold Off Print Job				Enabled* Disabled	Enable this feature if you want to prevent print jobs from starting while a user is initiating a copy job from the control panel. Held print jobs start printing after the copy job is finished, provided that no other copy job is in the print queue.
Restore Factory Settings				Address Book (M830 only) Copy (M830 only) Digital Send (M830 only) E-mail (M830 only) Fax (M830 only) General (M830 only) Print (M830 only) Security (M830 only) Cancel (M806) Reset (M806)	Use to restore all product settings to their factory defaults.

Copy Settings menu (M830 only)

To display: At the product control panel, select the Administration menu, and then select the Copy Settings menu.

In the following table, asterisks (*) indicate the factory default setting.

Table 2-44 Copy Settings menu (M830 only)

First level	Second level	Third level	Values	Description
Copies			1–9999 Default = 1	Configure the default options for copy jobs. If the user does not specify the job options when creating the job, the default options are used.
Sides			1-sided original, 1-sided output* 2-sided original, 2-sided output 1-sided original, 2-sided output 2-sided original, 1-sided output	Use to indicate whether the original document is printed on one or both sides, and whether the copies should be printed on one or both sides. For example, select 1-sided original, 2- sided output when the original is printed on one side, but you want to make two-sided copies.
	Orientation	Portrait*		Specify portrait or landscape orientation and select the way the second sides are printed. Portrait orientation means the short edge of the page is along the top.
		Landscape		Landscape orientation means the long edge of the page is along the top.

Table 2-44 Copy Settings menu (M830 only) (continued)

First level	Second level	Third level	Values	Description
		2-Sided Format	Book-style Flip-style Book-style original; Flip-style copy Flip-style original; Book-style copy	If you are making two-sided copies, select a 2-sided format option. Book-style: The back side of the original is printed right-side-up, and the back side of the copy is printed the same way. Use this option for originals and copies that are bound along the left edge. Flip-style: The back side of the original is printed upside-down, and the back side of the copy is printed the same way. Use this option for originals and copies that are to be bound along the top edge. Book-style original; Flip-style copy: The back side of the original is printed right-side-up, but the back side of the copy is printed upside-down. Use this option when the original is bound along the left edge, but you want the copies to be bound along the top edge. Flip-style original; Book-style copy: The back side of the original is printed upside-down, but the back side of the copy is printed right-side-up. Use this option when the original is bound along the top edge, but you want the copies to be bound along the left edge.

Table 2-44 Copy Settings menu (M830 only) (continued)

First level	Second level	Third level	Values	Description
Collate			Collate on (Sets in page order)* Collate off (Pages grouped)	If you are making more than one copy, select the Collate on (Sets in page order) option to assemble the pages in the correct order in each set of copies. Select the Collate off (Pages grouped) option to group the same pages together. For example, if you are making five copies of an original document that has two pages, all five first pages would be grouped together and all five second pages would be grouped together.
Reduce/Enlarge	Scaling		Auto* 100% 75% 50% 125% 150% 200% Range X-Y (25-400%)	Use to scale the size of the document up or down. Select one of the predefined percentages, or select the Scaling field and type a percentage between 25 and 400. The Auto option automatically scales the image to fit the paper size in the tray. NOTE: To reduce the image, select a scaling percentage that is less than 100. To enlarge the image, select a scaling percentage that is greater than 100.
	Auto Include Margins			The product reduces the image slightly to fit the entire scanned image within the printable area on the page.
Paper Selection			Manually feed Automatic Tray 1: [Type], [Size] Tray <X>: [Type], [Size]	For the best color and image quality, select the appropriate paper type from the control panel menu or from the print driver.

Table 2-44 Copy Settings menu (M830 only) (continued)

First level	Second level	Third level	Values	Description
Image Adjustment	Darkness		Select a value using the slide bar, or touch Automatic.	Use to improve the overall quality of the copy. Adjust the Darkness setting to increase or decrease the amount of white and black in the colors.
	Contrast		Select a value using the slide bar, or touch Automatic.	Adjust the Contrast setting to increase or decrease the difference between the lightest and darkest color on the page.
	Background Cleanup		Select a value using the slide bar, or touch Automatic.	Adjust the Background Cleanup setting if you are having trouble copying a faint image.
	Sharpness		Select a value using the slide bar, or touch Automatic.	Adjust the Sharpness setting to clarify or soften the image. For example, increasing the sharpness could make text appear crisper, but decreasing it could make photographs appear smoother.
	Default			Select this to make the selected Image Adjustment setting the default value.
Content Orientation	Orientation		Portrait* Landscape	For some features to work correctly, you must specify the way the content of the original document is placed on the page. Portrait orientation means the short edge of the page is along the top. Landscape orientation means the long edge of the page is along the top.

Table 2-44 Copy Settings menu (M830 only) (continued)

First level	Second level	Third level	Values	Description
	2-Sided Format		Book-style Flip-style Book-style original; Flip-style copy Flip-style original; Book-style copy	If you are making two-sided copies, select a 2-sided format option. Book-style: The back side of the original is printed right-side-up, and the back side of the copy is printed the same way. Use this option for originals and copies that are bound along the left edge. Flip-style: The back side of the original is printed upside-down, and the back side of the copy is printed the same way. Use this option for originals and copies that are to be bound along the top edge. Book-style original; Flip-style copy: The back side of the original is printed right-side-up, but the back side of the copy is printed upside-down. Use this option when the original is bound along the left edge, but you want the copies to be bound along the top edge. Flip-style original; Book-style copy: The back side of the original is printed upside-down, but the back side of the copy is printed right-side-up. Use this option when the original is bound along the top edge, but you want the copies to be bound along the left edge.
Output Bin				Automatic Standard Bin Correct Order Rear Bin Straightest Path
Optimize Text/Picture	Manually adjust*		Optimize For slider	Use this setting to optimize the output for a particular type of content.

Table 2-44 Copy Settings menu (M830 only) (continued)

First level	Second level	Third level	Values	Description
			Text Printed picture Photograph	Manually adjust: Use to manually optimize the setting for each document. Printed picture: Use for line drawings and preprinted images, such as magazine clippings or pages from books. If you see bands of irregular color or intensity on copies, try selecting the Printed picture setting to improve the quality. Photograph: Use for photographic prints.
Pages per Sheet			One (1) Two (2) Four (4)	Copies multiple pages onto one sheet of paper. NOTE: Before using this screen, use the Content Orientation screen to describe the original document orientation.
	Page Order		Right, then down Down, then right	If you are printing four pages per sheet, select the page order. To print the pages in rows, select the Right, then down option. To print the pages in columns, select the Down, then right option.
	Add Page Borders			If you are printing two or more pages per sheet and you want to print a border around each page, select the Add Page Borders option.
Original Size			Select from a list of sizes that the product supports.	Describes the page size of the original document.
Booklet Format	Booklet		Booklet off Booklet on	Use to copy two or more pages onto one sheet of paper so you can fold the sheets in the center to form a booklet. The product arranges the pages in the correct order. For example, if the original document has eight pages, the product prints pages 1 and 8 on the same sheet.

Table 2-44 Copy Settings menu (M830 only) (continued)

First level	Second level	Third level	Values	Description
	Original Sides		1-sided 2-sided	Select the 1-sided option if the original document is printed on only one side. Select the 2-sided option if the original document is printed on two sides.
	Borders on Each Page			To print a border around each page, select the Borders on Each Page option.
Edge-to-Edge			Normal (recommended)* Edge-to-Edge output	Use to avoid shadows that can appear along the edges of copies when the original document is printed close to the edges. Combine with the Reduce/Enlarge feature to ensure that the entire page is printed on the copies. When the Edge-to-Edge feature is turned on, the product minimizes margins and prints as close to the edge of the paper as possible.
Job Build			Job Build off* Job Build on	Use to combine several original documents into one job. Also use this feature to scan an original document that has more pages than the document feeder can accommodate at one time. The product temporarily saves all the scanned images. After you have scanned all the pages for the job, touch the Finish option to finish the job.

Scan/Digital Send Settings menu (M830 only)

To display: At the product control panel, select the Administration menu, and then select the Scan/Digital Send Settings menu.

In the following table, asterisks (*) indicate the factory default setting.

Table 2-45 Scan/Digital Send Settings menu (M830 only)

First level	Second level	Third level	Fourth level	Values	Description
E-mail Settings Default Save to Network Folder Options Default Save to USB Options NOTE: The same options are available for each of these features, except where noted.	E-mail Setup NOTE: Email Settings only	E-mail Setup Wizard			Use to configure settings that apply to sending documents through email or saving documents to a folder on the network or on a USB multi-drive. The E-mail Setup Wizard feature configures the product to send scanned images as email attachments. To open the product HP Embedded Web Server and set up the email notification server, enter the product IP address into a Web browser.

Table 2-45 Scan/Digital Send Settings menu (M830 only) (continued)

First level	Second level	Third level	Fourth level	Values	Description
	Default Job Options	Image Preview		Make optional* Require preview Disable preview	Defines the default job options for each function. If you do not specify the job options when creating the job, the default options are used. For complete setup, go to the HP Embedded Web Server by typing the IP address of the product into a Web browser. Use the Image Preview feature to scan a document and display a preview before completing the job. Select whether this feature is available on the product. Make optional: The feature is optional, depending on the user who is signed in. Require preview Previews are required for all users. Disable preview: Previews are disabled for all users.
		Default File Name			The product is shipped with a factory default file name of [Untitled] for any scanned files that are sent or saved. Use this feature to specify a different default file name. If you are saving a file to a network folder or USB storage product and a file with the default file name already exists, a number is appended to the file name, for example, [Untitled]001.

Table 2-45 Scan/Digital Send Settings menu (M830 only) (continued)

First level	Second level	Third level	Fourth level	Values	Description
		Document File Type		Select from a list of file types.	PDF provides the best overall image and text quality. JPEG is a good choice for most graphics. Most computers have a browser that can view .JPEG files. This file type produces one file per page. TIFF is a standard file format that many graphics programs support. This file type produces one file per page. MTIFF: stands for multi-page TIFF. This file type saves multiple scanned pages in a single file. XPS (XML Paper Specification) creates an XAML file that preserves the original formatting of the document and supports color graphics and embedded fonts. NOTE: OCR file types are not supported on this product unless attached to DSS.

Table 2-45 Scan/Digital Send Settings menu (M830 only) (continued)

First level	Second level	Third level	Fourth level	Values	Description
		Optimize Text/ Picture		Manually adjust* Text Printed picture Photograph	Use to optimize the output for a particular type of content. You can optimize the output for text, printed pictures, or a mixture. Manually adjust: Use to manually optimize the setting for text or for pictures. Text: Use to optimize the text portion of the copy when text and/or pictures are on the original. Printed picture: Use for line drawings and preprinted images, such as magazine clippings or pages from books. Photograph: Best suited for making copies of printed pictures.
		Output Quality		High (large file) Medium* Low (small file)	Use to select the quality for the output. Higher-quality images require a larger file size than lower-quality images. Larger files take more time to send, and some recipients might have trouble receiving larger files.

Table 2-45 Scan/Digital Send Settings menu (M830 only) (continued)

First level	Second level	Third level	Fourth level	Values	Description
		Original Sides		1-sided 2-sided	Use to describe the layout for each side of the original document. First select whether the original document is printed on one side or both sides. Then touch the Orientation setting to indicate whether the original has portrait or landscape orientation. If it is printed on both sides, also select the 2-sided format that matches the original document.
			Orientation	Automatically detect Portrait* Landscape	For some features to work correctly, you must specify the way the content of the original document is placed on the page. Portrait orientation means the short edge of the page is along the top. Landscape orientation means the long edge of the page is along the top. In the Orientation area, select whether the original document has a portrait or landscape orientation.

Table 2-45 Scan/Digital Send Settings menu (M830 only) (continued)

First level	Second level	Third level	Fourth level	Values	Description
			2-Sided Format	Book-style Flip-style	Book-style: The back side of the original is printed right-side-up, and the back side of the copy is printed the same way. Use this option for originals and copies that are bound along the left edge. Flip-style: The back side of the original is printed upside-down, and the back side of the copy is printed the same way. Use this option for originals and copies that are to be bound along the top edge.
		Resolution		400 dpi 300 dpi 200 dpi 150 dpi* 75 dpi	Sets the resolution for sent documents. Higher resolution images have more dots per inch (dpi), so they show more detail. Lower resolution images have fewer dots per inch and show less detail, but the file size is smaller. Some file types, for example a file that will be processed with OCR, require a specific resolution. When these file types are selected, the Resolution setting might automatically change to a valid value.

Table 2-45 Scan/Digital Send Settings menu (M830 only) (continued)

First level	Second level	Third level	Fourth level	Values	Description
		Content Orientation	Orientation	Auto Detect Portrait* Landscape	For some features to work correctly, you must specify the way the content of the original document is placed on the page. Portrait orientation means the short edge of the page is along the top. Landscape orientation means the long edge of the page is along the top. In the Orientation area, select whether the original document has a portrait or landscape orientation.
			2-Sided Format	Book-style* Flip-style	Use to configure the default style for 2-sided print jobs. If the Book-style option is selected, the back side of the page is printed the right way up. This option is for print jobs that are bound along the left edge. If the Flip-style option is selected, the back side of the page is printed upside-down. This option is for print jobs that are bound along the top edge.

Table 2-45 Scan/Digital Send Settings menu (M830 only) (continued)

First level	Second level	Third level	Fourth level	Values	Description
		Color/Black		Automatically detect* Color Black/Gray Black	Use to enable or disable color scanning. Automatically detect: Automatically scans documents in color if at least one page has color. Color: Scans documents in color. Black/Gray: Scans documents in grayscale. Black: Scans documents in black and white with a compressed file size.
		Original Size		Selelct from a list of supported sizes.	Use to describe the page size of the original document.
		Notification		Do not notify* Notify when job completes Notify only if job fails	Configure to receive notification about the status of a sent document. Do not notify: Turns off this feature. Notify when job completes: Select to receive notification for this job only.
				Print E-mail	Notify only if job fails: Select to receive notification only if the job is not sent successfully. Print: Select to print the notification at this product.
			Include Thumbnail		NOTE: When sending an analog fax, select Include Thumbnail to receive a thumbnail image of the first page of the fax in your notification.

Table 2-45 Scan/Digital Send Settings menu (M830 only) (continued)

First level	Second level	Third level	Fourth level	Values	Description
			Notification E-mail address		E-mail: Select to receive the notification in an email. Touch the text box following Email Address, and then type the email address for the notification.
		Image Adjustment	Darkness		Use to improve the overall quality of the copy. Adjust the Darkness setting to increase or decrease the amount of white and black in the colors.
			Contrast		Adjust the Contrast setting to increase or decrease the difference between the lightest and darkest color on the page.
			Background Cleanup		Adjust the Background Cleanup setting if you are having trouble copying a faint image.
			Sharpness		Adjust the Sharpness setting to clarify or soften the image. For example, increasing the sharpness could make text appear crisper, but decreasing it could make photographs appear smoother.
			Automatic Tone		
			Default		Select this to make the selected Image Adjustment setting the default value.

Table 2-45 Scan/Digital Send Settings menu (M830 only) (continued)

First level	Second level	Third level	Fourth level	Values	Description
		Job Build		Job Build off* Job Build on	Use to combine several original documents into one job. Also use to scan an original document that has more pages than the document feeder can accommodate at one time. The product temporarily saves all the scanned images. After you have scanned all the pages for the job, touch Finish to finish the job.
		Cropping Options		Do not crop* Crop to content	Use this menu item to automatically crop the scan for digital sending. Use the Crop to content option to scan the smallest possible area that has detectable content.
		Erase Edges		Use Inches Back side erase Front side erase	Use this menu item to remove blemishes, such as dark borders or staple marks, by cleaning the specified edges of the scanned image. In each of the text boxes enter the measurements, in millimeters or inches, for how much of the top edge, bottom edge, left edge, and right edge to clean.
		Blank Page Suppression		Disabled* Enabled	Use to prevent blank pages in the original document from being included in the output document.

Table 2-45 Scan/Digital Send Settings menu (M830 only) (continued)

First level	Second level	Third level	Fourth level	Values	Description
Digital Send Service Setup	Allow Usage of Digital Sending Software (DSS) Server			Enabled* Disabled	Configure how the product interacts with the HP Digital Sending Software (DSS) server. HP DSS handles digital sending tasks, such as faxing, emailing, and sending scanned documents to a network folder or USB storage device. Use the Allow Usage of Digital Sending Software (DSS) Server option to configure the product to use HP DSS.
	Allow Transfer to New Digital Sending Software (DSS) Server			Enabled* Disabled	Use the Allow Transfer to New Digital Sending Software (DSS) Server option to specify whether DSS management of a product is transferable to a different DSS.

Fax Settings menu (M830 only)

To display: At the product control panel, select the Administration menu, and then select the Fax Settings menu.

In the following table, asterisks (*) indicate the factory default setting.

Table 2-46 Fax Settings menu (M830 only)

First level	Second level	Third level	Fourth level	Values	Description
Fax Send Settings	Fax Send Setup	Fax Setup Wizard			Configure settings for sending faxes from the product. Use the Fax Setup Wizard feature to set up options for faxing. NOTE: To set up LAN fax or Internet fax, use the HP Embedded Web Server. To open the HP Embedded Web Server, type the product network address into a Web browser. To configure the fax features, select the **Fax** tab.
		Fax Dialing Settings	Fax Dial Volume	Off Low* High	These settings control how the fax modem dials the outgoing fax number when faxes are sent.
			Dialing Mode	Tone* Pulse	
			Redial Interval	1 – 5 Minutes Default = 5 minutes	
			Fax Send Speed	Fast* Medium Slow	
			Dialing Prefix		
			Detect Dial Tone		
			Redial on Error	Range: 0 – 9 Default = 2	
			Redial on No Answer	Range: 0 – 2 Default = 0	

Table 2-46 Fax Settings menu (M830 only) (continued)

First level	Second level	Third level	Fourth level	Values	Description
			Redial on Busy	Range: 0 – 9 Default = 3	
		General Fax Send Settings	Fax Number Confirmation	Enabled Disabled*	If this feature is enabled, you must enter the fax number twice.
			PC Fax Send	Enabled* Disabled	Enables users who have the correct driver installed to send faxes through the product from their computers.
			JBIG Compression	Enabled* Disabled	The JBIG compression reduces fax-transmission time, which can result in lower phone charges. However, using JBIG compression sometimes causes compatibility problems with older fax machines. If this occurs, turn off the JBIG compression.
			Error Correction Mode	Enabled* Disabled	When error-correction mode is enabled and an error occurs during fax transmission, the product sends or receives the error portion again.
			Fax Header	Prepend* Overlay	Use to prepend or overlay the fax header page.
			Fax Number Speed Dial Matching	Enabled Disabled*	Use this item to match the fax number that you type to numbers that are saved as a speed dial.

Table 2-46 Fax Settings menu (M830 only) (continued)

First level	Second level	Third level	Fourth level	Values	Description
		Billing Codes	Enable Billing Codes	Off On*	When billing codes are enabled, a prompt displays that asks the user to enter the billing code for an outgoing fax. This prompt does not appear if the Allow users to edit billing codes check box is not checked. You can also use the billing codes report in the Reports menu to view the list of the billing codes that have been used for faxes that have been sent from the product. The list is grouped by billing code and also shows fax details. This feature can be used for billing or usage tracking.
			Default Billing Code		Specify a default billing code for faxing. If you specify a default billing code, this code displays in the Billing Code field when the user sends an outgoing fax. If this field is blank, no default billing code is provided for the user.
			Minimum Length	Range: 1 – 16 Default = 1	Specify the required length of the billing code. Billing codes can be between 1 and 16 characters long.
			Allow users to edit billing codes	Off On*	

Table 2-46 Fax Settings menu (M830 only) (continued)

First level	Second level	Third level	Fourth level	Values	Description
	Default Job Options	Image Preview		Make optional* Require preview Disable preview	Use the Image Preview feature to scan a document and display a preview before completing the job. Select whether this feature is available on the product. Make optional: The feature is optional, depending on the user who is signed in. Require preview Previews are required for all users. Disable preview: Previews are disabled for all users.
		Resolution		Standard (100 x 200dpi)* Fine (200 x 200dpi) Superfine (300 x 300dpi)	Select the resolution for outgoing faxes. If you increase the resolution, faxes might be clearer but they could transmit more slowly. Some file types, for example a file that will be processed with OCR, require a specific resolution. When these file types are selected, the Resolution setting might be automatically changed to a valid value.

Table 2-46 Fax Settings menu (M830 only) (continued)

First level	Second level	Third level	Fourth level	Values	Description
		Original Sides		1-sided* 2-sided	Use to describe the layout for each side of the original document. First select whether the original document is printed on one side or both sides. Then touch the Orientation setting to indicate whether the original has portrait or landscape orientation. If it is printed on both sides, also select the 2-sided format that matches the original document.
			Orientation	Portrait* Landscape	For some features to work correctly, you must specify the way the content of the original document is placed on the page. Portrait: This setting means the short edge of the page is along the top. Landscape: This setting means the long edge of the page is along the top.
			2-Sided Format	Book-style* Flip-style	Book-style: The back side of the original is printed right-side-up, and the back side of the copy is printed the same way. Use this option for originals and copies that are bound along the left edge. Flip-style: The back side of the original is printed upside-down, and the back side of the copy is printed the same way. Use this option for originals and copies that are to be bound along the top edge.

Table 2-46 Fax Settings menu (M830 only) (continued)

First level	Second level	Third level	Fourth level	Values	Description
		Notification		Do not notify* Notify when job completes Notify only if job fails	Use to receive notification about the status of a sent document. Do not notify: Turns off this feature. Notify when job completes: Select to receive notification for this job only. Notify only if job fails: Select to receive notification only if the job is not sent successfully.
				Print E-mail	Print: Select to print the notification at this product. E-mail: Select to receive the notification in an email. Touch the text box following Email Address, and then enter the email address for the notification.
			Include Thumbnail		When sending an analog fax, select Include Thumbnail to receive a thumbnail image of the first page of the fax in your notification.
			Notification E-mail address		Provide the email address that will receive notifications.
		Content Orientation	Orientation	Portrait* Landscape	For some features to work correctly, you must specify the way the content of the original document is placed on the page. Portrait: This setting means the short edge of the page is along the top. Landscape: This setting means the long edge of the page is along the top.

Table 2-46 Fax Settings menu (M830 only) (continued)

First level	Second level	Third level	Fourth level	Values	Description
			2-Sided Format	Book-style* Flip-style	Use to configure the default style for 2-sided print jobs. If the Book-style option is selected, the back side of the page is printed the right way up. This option is for print jobs that are bound along the left edge. If the Flip-style option is selected, the back side of the page is printed upside-down. This option is for print jobs that are bound along the top edge.
		Original Size		Select from a list of sizes that the product supports.	Use to describe the page size of the original document.
		Image Adjustment	Darkness		Use to improve the overall quality of the copy. Adjust the Darkness setting to increase or decrease the amount of white and black in the colors.
			Contrast		Adjust the Contrast setting to increase or decrease the difference between the lightest and darkest color on the page.
			Background Cleanup		Adjust the Background Cleanup setting if you are having trouble copying a faint image.
			Sharpness		Adjust the Sharpness setting to clarify or soften the image. For example, increasing the sharpness could make text appear crisper, but decreasing it could make photographs appear smoother.

Table 2-46 Fax Settings menu (M830 only) (continued)

First level	Second level	Third level	Fourth level	Values	Description
			Automatic Tone		The product automatically adjusts the Darkness, Contrast, and Background Cleanup settings to the most appropriate for the scanned document.
			Default		Select this to make the selected Image Adjustment setting the default value.
		Optimize Text/ Picture	Manually adjust*	Optimize For Text Printed picture Photograph	Optimizes the output for a particular type of content. You can optimize the output for text, printed pictures, or a mixture. Manually adjust: Use to manually optimize the setting for text or for pictures. Text: Use to optimize the text portion of the copy where text and/or pictures are on the original. Printed picture: Use for line drawings and preprinted images, such as magazine clippings or pages from books. Photograph: Best suited for making copies of printed pictures.

Table 2-46 Fax Settings menu (M830 only) (continued)

First level	Second level	Third level	Fourth level	Values	Description
		Job Build		Job Build off* Job Build on	Use to divide a complex job into smaller segments. This is useful when you are copying or scanning an original document that has more pages than the document feeder can hold, or when you want to combine pages that have different sizes into one job. You can use either the glass or the document feeder to scan the original documents.
		Blank Page Suppression		Disabled* Enabled	Prevents blank pages in the original document from being included in the output document.
Fax Receive Settings	Fax Receive Setup	Ringer Volume		Off Low* High	Use to configure settings for receiving faxes.
		Rings To Answer		Range: 1–6 Default = 1	
		Fax Receive Speed		Fast* Medium Slow	
		Ring Interval		Range: 220–600 ms Default = 600 ms	
		Ring Frequency		Range: 1–200 Default = 68hz	

Table 2-46 Fax Settings menu (M830 only) (continued)

First level	Second level	Third level	Fourth level	Values	Description
	Fax Printing Schedule			Always store faxes Always print faxes* Use Fax Printing Schedule	If you have concerns about the security of private faxes, use this feature to store faxes rather than having them automatically print. Select Incoming Fax Options, and then you can choose to always store faxes, always print them, or you can set up a schedule for each day of the week.
		Schedule Touch this to set up a fax printing schedule if you selected the Use Fax Printing Schedule option.	Add (plus sign) Edit Delete	Print incoming faxes Store incoming faxes Time Event Days	If you are using a fax printing schedule, use this menu to configure when to print faxes.

Table 2-46 Fax Settings menu (M830 only) (continued)

First level	Second level	Third level	Fourth level	Values	Description
	Blocked Fax Numbers	Fax Number to Block			The blocked fax list can contain up to 30 numbers. When the product receives a call from one of the blocked fax numbers, it deletes the incoming fax. It also logs the blocked fax in the activity log along with job-accounting information. Add blocked numbers: Enter a fax number into the Fax Number to Block field, and then touch the arrow button to add a new number to the blocked fax list. To remove blocked numbers: Select a number and touch the Delete button to delete it from the blocked fax list. To clear all blocked numbers: Touch the Delete All button to clear all of the numbers from the blocked fax list. You can also use the Blocked Fax List report in the Information menu to view the list of the fax numbers that have been blocked on this product.

Table 2-46 Fax Settings menu (M830 only) (continued)

First level	Second level	Third level	Fourth level	Values	Description
	Default Job Options	Notification		Do not notify* Notify when job completes Notify only if job fails	Configure to receive notification about the status of a sent document. Do not notify: Turns off this feature. Notify when job completes: Select to receive notification for this job only. Notify only if job fails: Select to receive notification only if the job is not sent successfully.
				Print E-mail*	E-mail: Select to receive the notification in an email. Touch the text box following Email Addess, and then enter the email address for the notification.
			Include Thumbnail		NOTE: When sending an analog fax, select Include Thumbnail to receive a thumbnail image of the first page of the fax in your notification.
			Notification E-mail address		
		Stamp Received Faxes		Enabled Disabled*	Use this option to add the date, time, sender's phone number, and page number to each page of the faxes that this product receives.
		Fit to Page		Enabled* Disabled	Use to shrink faxes that are larger than Letter-size or A4-size so that they can fit onto a Letter-size or A4-size page. If this feature set to Disabled, faxes larger than Letter or A4 will flow across multiple pages.

Table 2-46 Fax Settings menu (M830 only) (continued)

First level	Second level	Third level	Fourth level	Values	Description
		Paper Selection		Automatic* Select from a list of the trays.	
		Sides		1-sided* 2-sided	Use to describe the layout for each side of the original document. First select whether the original document is printed on one side or both sides. Then touch the Orientation setting to indicate whether the original has portrait or landscape orientation. If it is printed on both sides, also select the 2-sided format that matches the original document.
Fax Forwarding	Enable Fax Forwarding			Disabled* Enabled	Use to forward received faxes to another fax machine.
		Type of Fax Job to Forward		All faxes Sent faxes Received faxes	
		Fax Forwarding Number			
	Clear Fax Activity Log				Clears all events from the Fax Activity Log list.

General Print Settings menu

To display: At the product control panel, select the Administration menu, and then select the General Print Settings menu.

In the following table, asterisks (*) indicate the factory default setting.

Table 2-47 General Print Settings menu

First level	Second level	Values	Description
Manual Feed		Enabled Disabled*	Use to enable or disable the manual-feed feature, which allows the user to feed paper into the product by hand. When this feature is enabled, the user can select manual feed from the control panel as the paper source for a job. If a tray is not specified as part of a job, manual feed is selected.
Courier Font		Regular* Dark	Select which version of the Courier font you want to use. The factory default setting is Regular, which uses an average stroke width. The Dark setting can be used if a heavier Courier font is needed.
Wide A4		Enabled Disabled*	Changes the printable area of A4-size paper. If you enable this option, eighty 10-pitch characters can be printed on a single line of A4 paper.
Print PS Errors		Enabled Disabled*	Use this feature to select whether a PostScript (PS) error page is printed when the product encounters a PS error.
Print PDF Errors		Enabled Disabled*	Selects whether a PDF error page is printed when the product encounters a PDF error.
Personality		Auto* PCL POSTSCRIPT PDF	Configures the default print language or personality for the product. Normally you should not change the product language. If you change the setting to a specific product language, the product does not automatically switch from one language to another unless specific software commands are sent to it.

Table 2-47 General Print Settings menu (continued)

First level	Second level	Values	Description
PCL	Form Length	Range: 5 – 128 Default = 60	Controls the PCL print-command options. PCL is a set of product commands that Hewlett-Packard developed to provide access to product features. Use the Form Length feature to select the user-soft default vertical form length.
	Orientation	Portrait* Landscape	Select the orientation that is most often used for copy or scan originals. Select the Portrait option if the short edge is at the top or select the Landscape option if the long edge is at the top.
	Font Source	Internal*	Selects the font source for the user-soft default font. The list of available options varies depending on the installed product options.
	Font Number	Range: 0 – 110 Default = 0	Specifies the font number for the user-soft default font using the source that is specified in the Font Source menu. The product assigns a number to each font and lists it on the PCL font list. The font number displays in the Font # column of the printout.
	Font Pitch	Range: 0.44 – 99.99 Default = 10	If the Font Source option and the Font Number setting indicate a contour font, then use this feature to select a default pitch (for a fixed-spaced font).
	Font Point Size	Range: 4.00 – 999.75 Default = 12.00	If the Font Source option and the Font Number setting indicate a contour font, then use this feature to select a default point size (for a proportional-spaced font).
	Symbol Set	Select from a list of symbol sets.	Select any one of several available symbol sets from the control panel. A symbol set is a unique grouping of all the characters in a font. The factory default value for this option is PC-8. Either PC-8 or PC-850 are recommended for line-draw characters.

Table 2-47 General Print Settings menu (continued)

First level	Second level	Values	Description
	Append CR to LF	No* Yes	Configure whether a carriage return (CR) is appended to each line feed (LF) encountered in backwards-compatible PCL jobs (pure text, no job control). Select Yes to append the carriage return. The default setting is No. Some environments, such as UNIX, indicate a new line by using only the line-feed control code. This option allows the user to append the required carriage return to each line feed.
	Suppress Blank Pages	No* Yes	This option is for users who are generating their own PCL, which could include extra form feeds that would cause blank pages to be printed. When the Yes option is selected, form feeds are ignored if the page is blank.
	Media Source Mapping	Standard* Classic	Use to select and maintain input trays by number when you are not using the product driver, or when the software program has no option for tray selection. The following options are available: Standard: Tray numbering is based on newer HP LaserJet models. Classic: Tray numbering is based on HP LaserJet 4 and older models.

Default Print Options menu

To display: At the product control panel, select the Administration menu, and then select the Default Print Options menu.

In the following table, asterisks (*) indicate the factory default setting.

Table 2-48 Default Print Options menu

First level	Second level	Values	Description
Number of Copies		Range: 1–32000 Default = 1	Sets the default number of copies for a copy job. This default applies when the Copy function or the Quick Copy function is initiated from the product Home screen.
Default Paper Size		Select from a list of sizes that the product supports.	Configures the default paper size used for print jobs.
Default Custom Paper Size	X Dimension	Range: 3–8.5 inches Default = 8.5 inches	Configures the default paper size that is used when the user selects **Custom** as the paper size for a print job.
	Y Dimension	Range: 5–14 inches Default = 14 inches	
	Use Inches	Enabled* Disabled	
Sides		1-sided* 2-sided	Use to indicate whether the original document is printed on one or both sides, and whether the copies should be printed on one or both sides. For example, select the 1-sided original, 2-sided output option when the original is printed on one side, but you want to make two-sided copies. Select the Orientation setting to specify portrait or landscape orientation and to select the way the second sides are printed.

Table 2-48 Default Print Options menu (continued)

First level	Second level	Values	Description
2-Sided Format		Book-style* Flip-style	Configures the default style for 2-sided print jobs. If the Book-style option is selected, the back side of the page is printed the right way up. This option is for print jobs that are bound along the left edge. If the Flip-style option is selected, the back side of the page is printed upside-down. This option is for print jobs that are bound along the top edge.
Edge-to-Edge		Normal (recommended)* Edge-to-Edge output	Use to avoid shadows that can appear along the edges of copies when the original document is printed close to the edges.

Display Settings menu

To display: At the product control panel, select the Administration menu, and then select the Display Settings menu.

In the following table, asterisks (*) indicate the factory default setting.

Table 2-49 Display Settings menu

First level	Second level	Values	Description
Display Brightness		Range: -10 to 10 The default value is 0.	Use to specify the intensity of the LCD control-panel display.
Key Press Sound M830 only		On* Off	Use to specify whether you hear a sound when you touch the screen or press buttons on the control panel.
Language Settings	Language	Select from a list of languages that the product supports.	Use to select a different language for control-panel messages and specify the default keyboard layout. When you select a new language, the keyboard layout automatically changes to match the factory default for the selected language.
	Keyboard Layout M830 only	Each language has a default keyboard layout. To change it, select from a list of layouts.	Select the default keyboard layout that matches the language you want to use.
How to Connect Button M830 only		Display* Hide	Use this menu item to display or hide the How to Connect Button on the Home screen.
Network Address Button M806 only		Display* Hide	Use this menu item to display or hide the IP address on the Home screen.
Date and Time M830 only		Show Date and Time* Hide Date and Time	Select whether to display or hide the date and time on the control panel Home screen.
Inactivity Timeout		Range: 10 – 300 seconds Default = 60 seconds	Specifies the amount of time that elapses between any activity on the control panel and when the product resets to the default settings. When the timeout expires, the control-panel display returns to the Home menu, and any user signed in to the product is signed out.

Table 2-49 Display Settings menu (continued)

First level	Second level	Values	Description
Clearable Warnings		On Job*	Use this feature to set the period that a clearable warning displays on the control panel. If the On setting is selected, clearable warnings appear until the Clearable Warnings button is pressed. If theJob setting is selected, clearable warnings stay on the display during the job that generated the warning and disappear from the display when the next job starts.
Continuable Events		Auto-continue (10 seconds)* Touch OK to continue	Use this option to configure the product behavior when the product encounters certain errors. If the Auto-continue (10 seconds) option is selected, the job will continue after 10 seconds. If theTouch OK to continue option is selected, the job will stop and require the user to press the OK button before continuing.

Manage Supplies menu

To display: At the product control panel, select the Administration menu, and then select the Manage Supplies menu.

In the following table, asterisks (*) indicate the factory default setting.

Table 2-50 Manage Supplies menu

First level	Second level	Third level	Fourth level	Values	Description
Supplies Status				Print View (M830 only)	
Supply Settings	Black Cartridge	Low Threshold Settings		1-100% Default = 10%	Set the estimated percentage at which the product notifies you when the toner cartridge is very low.
		Very Low Settings		Stop Prompt to continue* Continue	Specifies how the product notifies you when the toner cartridge is very low. Stop: The product stops until you replace the toner cartridge. Prompt to continue: The product stops and prompts you to replace the toner cartridge. You can acknowledge the prompt and continue printing. Continue: The product alerts you that a toner cartridge is very low, but it continues printing.
	Document Feeder Kit M830 only	Low Threshold Settings		1-100% Default = 10%	Set the percentage at which the product notifies you when a document feeder kit is needed.

Table 2-50 Manage Supplies menu (continued)

First level	Second level	Third level	Fourth level	Values	Description
		Very Low Settings		Stop Prompt to continue* Continue	Configure how the product responds when the document feeder kit is reaching the end of its estimated life. Stop: The product stops until you replace the document feeder kit. Prompt to continue: The product stops and prompts you to replace the document feeder kit. You can acknowledge the prompt and continue printing Continue: The product alerts you that the document feeder kit is very low, but it continues printing.
	Maintenance Kit M806 only	Low Threshold Settings		1-100% Default = 10%	Set the percentage at which the product notifies you when the maintenance kit is needed.
		Very Low Settings		Stop Prompt to continue* Continue	Configure how the product responds when the maintenance kit is reaching the end of its estimated life. Stop: The product stops until you replace the maintenance kit. Prompt to continue: The product stops and prompts you to replace the maintnenace kit. You can acknowledge the prompt and continue printing Continue: The product alerts you that the maintnenace kit is very low, but it continues printing.

Table 2-50 Manage Supplies menu (continued)

First level	Second level	Third level	Fourth level	Values	Description
	Fuser Kit	Low Threshold Settings		1-100% Default = 10%	Set the estimated percentage at which the product notifies you when the fuser is low.
		Very Low Settings		Stop Prompt to continue* Continue	Configure how the product responds when the fuser is reaching the end of its estimated life. Stop: The product stops until you replace the fuser. Prompt to continue: The product stops and prompts you to replace the fuser. You can acknowledge the prompt and continue printing. Continue: The product alerts you that the fuser is very low, but it continues printing.
	Store Usage Data			On supplies Not on supplies	The Store Usage Data menu provides a way to suppress the toner cartridges from storing most of the information gathered exclusively for the purpose of understanding the usage of the product. Select the On supplies setting to store the data on the toner cartridge memory chip. Select the Not on supplies setting to suppress the information from being stored on the memory chip.

Table 2-50 Manage Supplies menu (continued)

First level	Second level	Third level	Fourth level	Values	Description
Supply Messages		Low Message		On* Off	Use to configure whether a message displays on the control panel when supplies are getting low, but have not yet reached the low threshold.
Reset Supplies	New Document Feeder Kit (M830) New Maintenance Kit (M806)			Reset Cancel	Select this option if you have installed a new document feeder kit (M830) or maintenance kit (M806).

Manage Trays menu

To display: At the product control panel, select the Administration menu, and then select the Manage Trays menu.

In the following table, asterisks (*) indicate the factory default setting.

Table 2-51 Manage Trays menu

First level	Values	Description
Use Requested Tray	Exclusively* First	Controls how the product handles jobs that have specified a specific input tray. Two options are available: Exclusively: The product never selects a different tray when the user has indicated that a specific tray should be used, even if that tray is empty. First: The product pulls from another tray if the specified tray is empty, even though the user specifically indicated a tray for the job.
Manually Feed Prompt	Always* Unless loaded	Indicate whether a prompt should appear when the type or size for a job does not match the specified tray and the product pulls from the multipurpose tray instead. Two options are available: Always: A prompt always displays before using the multipurpose tray. Unless loaded: A message displays only if the multipurpose tray is empty.
Size/Type Prompt	Display* Do not display	Controls whether the tray configuration message displays whenever a tray is closed. Two options are available: Display: Shows the tray configuration message when a tray is closed. The user is able to configure the tray settings directly from this message. Do not display: Prevents the tray configuration message from automatically appearing.
Use Another Tray	Enabled* Disabled	Use to turn on or off the control-panel prompt to select another tray when the specified tray is empty. Two options are available: Enabled: When this option is selected, the user is prompted either to add paper to the selected tray or to choose a different tray. Disabled: When this option is selected, the user is not given the option of selecting a different tray. The product prompts the user to add paper to the tray that was initially selected.

Table 2-51 Manage Trays menu (continued)

First level	Values	Description
Alternative Letterhead Mode	Disabled* Enabled	Use to load letterhead or preprinted paper into the tray the same way for all print jobs, whether you are printing to one side of the sheet or to both sides of the sheet. When this option is selected, load the paper as you would for printing on both sides. See the user documentation that came with the product for instructions about loading letterhead for printing on both sides. When this option is selected, the product speed slows to the speed required for printing on both sides.
Duplex Blank Pages	Auto* Yes	Control how the product handles two-sided jobs (duplexing). Two options are available: Auto: Enables Smart Duplexing, which instructs the product not to process blank pages. Yes: Disables Smart Duplexing and forces the duplexer to flip the sheet of paper even if it is printed on only one side. This might be preferable for certain jobs that use paper types such as letterhead or prepunched paper.
Override A4/Letter	Yes* No	Prints on letter-size paper when an A4 job is sent but no A4-size paper is loaded in the product (or to print on A4 paper when a letter-size job is sent but no letter-size paper is loaded). This option will also override A3 with ledger-size paper and ledger with A3-size paper.

Network Settings menu

To display: At the product control panel, select the Administration menu, and then select the Network Settings menu.

In the following table, asterisks (*) indicate the factory default setting.

Table 2-52 Network Settings menu

First level	Values	Description
I/O Timeout	Range: 5 – 300 sec Default = 15	Use to set the I/O timeout period in seconds. I/O timeout refers to the elapsed time before a print job fails. If the stream of data that the product receives for a print job gets interrupted, this setting indicates how long the product will wait before it reports that the job has failed.
Jetdirect Menu	See Table 2-53 Jetdirect Menu on page 310 for details. These menus have the same structure. If an additional HP Jetdirect network card is installed in the EIO slot, then both menus are available.	

Table 2-53 Jetdirect Menu

First level	Second level	Third level	Fourth level	Values	Description
Information	Print Sec Report			Yes No*	Yes: Prints a page that contains the current security settings on the HP Jetdirect print server. No: A security settings page is not printed.
TCP/IP	Enable			On* Off	On: Enable the TCP/IP protocol. Off: Disable the TCP/IP protocol.
	Host Name			Use the arrow buttons to edit the host name. NPIXXXXXX*	An alphanumeric string, up to 32 characters, used to identify the product. This name is listed on the HP Jetdirect configuration page. The default host name is NPIxxxxxx, where xxxxxx is the last six digits of the LAN hardware (MAC) address.

Table 2-53 Jetdirect Menu (continued)

First level	Second level	Third level	Fourth level	Values	Description
	IPV4 Settings	Config Method		Bootp DHCP* Auto IP Manual	Specifies the method that TCP/IPv4 parameters will be configured on the HP Jetdirect print server. Bootp (Bootstrap Protocol): Use for automatic configuration from a BootP server. DHCP (Dynamic Host Configuration Protocol): Use for automatic configuration from a DHCPv4 server. If selected and a DHCP lease exists, the DHCP Release menu and the DHCP Renew menu are available to set DHCP lease options. Auto IP: Use for automatic link-local IPv4 addressing. An address in the form 169.254.x.x is assigned automatically. If you set this option to the Manual setting, use the Manual Settings menu to configure TCP/IPv4 parameters.
		Manual Settings NOTE: This menu is available only if you select the Manual option under the Config Method menu.	IP Address	Enter the address.	(Available only if the Config Method option is set to the Manual option.) Configure parameters directly from the product control panel:
			Subnet Mask	Enter the address.	
			Default Gateway	Enter the address.	

Table 2-53 Jetdirect Menu (continued)

First level	Second level	Third level	Fourth level	Values	Description
		Default IP		Auto IP* Legacy	Specify the IP address to default to when the print server is unable to obtain an IP address from the network during a forced TCP/IP reconfiguration (for example, when manually configured to use BootP or DHCP). NOTE: This feature assigns a static IP address that might interfere with a managed network. Auto IP: A link-local IP address 169.254.x.x is set. Legacy: The address 192.0.0.192 is set, consistent with older HP Jetdirect products.
		Primary DNS		Range: 0 – 255 Default = xxx.xxx.xx.xx	Specify the IP address (n.n.n.n) of a Primary Domain Name System (DNS) Server.
		Secondary DNS		Range: 0 – 255 Default = 0.0.0.0	Specify the IP address (n.n.n.n) of a Secondary DNS Server.
	IPV6 Settings	Enable		Off On*	Use this item to enable or disable IPv6 operation on the print server. Off: IPv6 is disabled. On: IPv6 is enabled.
		Address	Manual Settings	Enable Address	Use this item to enable and manually configure a TCP/IPv6 address.

Table 2-53 Jetdirect Menu (continued)

First level	Second level	Third level	Fourth level	Values	Description
		DHCPV6 Policy		Router Specified Router Unavailable* Always	Router Specified: The stateful auto-configuration method to be used by the print server is determined by a router. The router specifies whether the print server obtains its address, its configuration information, or both from a DHCPv6 server. Router Unavailable: If a router is not available, the print server should attempt to obtain its stateful configuration from a DHCPv6 server. Always: Whether a router is available, the print server always attempts to obtain its stateful configuration from a DHCPv6 server.
		Primary DNS			
		Secondary DNS			

Table 2-53 Jetdirect Menu (continued)

First level	Second level	Third level	Fourth level	Values	Description
	Proxy Server			Select from a provided list.	Specifies the proxy server to be used by embedded applications in the product. A proxy server is typically used by network clients for Internet access. It caches Web pages, and provides a degree of Internet security, for those clients. To specify a proxy server, enter its IPv4 address or fully-qualified domain name. The name can be up to 255 octets. For some networks, you might need to contact your Internet Service Provider (ISP) for the proxy server address.
	Proxy Port			Default = **00080**	Enter the port number used by the proxy server for client support. The port number identifies the port reserved for proxy activity on your network, and can be a value from 0 to 65535.
	Idle Timeout			Default = **0270**	The time period, in seconds, after which an idle TCP print data connection is closed (default is 270 seconds, 0 disables the timeout).

Table 2-53 Jetdirect Menu (continued)

First level	Second level	Third level	Fourth level	Values	Description
Security	Secure Web			HTTPS Required* HTTPS Optional	For configuration management, specify whether the HP Embedded Web Server will accept communications using HTTPS (Secure HTTP) only, or both HTTP and HTTPS. HTTPS Required: For secure, encrypted communications, only HTTPS access is accepted. The print server will appear as a secure site.
	IPSEC			Keep Disable*	Specify the IPSec status on the print server. Keep: IPSec status remains the same as currently configured. Disable: IPSec operation on the print server is disabled.
	802.1X			Reset Keep*	Specify whether the 802.1X settings on the print server are reset to the factory defaults. Reset: The 802.1X settings are reset to the factory defaults. Keep: The current 802.1X settings are maintained.
	Reset Security			Yes No*	Specify whether the current security settings on the print server will be saved or reset to factory defaults. Yes: Security settings are reset to factory defaults. No: The current security settings are maintained.

Table 2-53 Jetdirect Menu (continued)

First level	Second level	Third level	Fourth level	Values	Description
Diagnostics	Embedded Tests	LAN HW Test		Yes No*	Provides tests to help diagnose network hardware or TCP/IP network connection problems. Embedded tests help to identify whether a network fault is internal or external to the product. Use an embedded test to check hardware and communication paths on the print server. After you select and enable a test and set the execution time, you must select the Execute option to initiate the test. Depending on the execution time, a selected test runs continuously until either the product is turned off, or an error occurs and a diagnostic page is printed. CAUTION: Running this embedded test will erase your TCP/IP configuration. This test performs an internal loopback test. An internal loopback test will send and receive packets only on the internal network hardware. There are no external transmissions on your network.

Table 2-53 Jetdirect Menu (continued)

First level	Second level	Third level	Fourth level	Values	Description
		HTTP Test		Yes No*	This test checks operation of HTTP by retrieving predefined pages from the product, and tests the HP Embedded Web Server. Select the Yes option to choose this test, or the No option to not choose it.
		SNMP Test		Yes No*	This test checks operation of SNMP communications by accessing predefined SNMP objects on the product. Select the Yes option to choose this test, or the No option to not choose it.
		Data Path Test		Yes No*	This test helps to identify data path and corruption problems on an HP postscript level 3 emulation product. It sends a predefined PS file to the product, However, the test is paperless; the file will not print. Select the Yes option to choose this test, or the No option to not choose it.
		Select All Tests		Yes No*	Use this item to select all available embedded tests. Select the Yes option to choose all tests. Select the No option to select individual tests.

Table 2-53 Jetdirect Menu (continued)

First level	Second level	Third level	Fourth level	Values	Description
		Execution Time [H]		Range: 1 – 24 hours Default = 1 hour	Specify the length of time (in hours) that an embedded test will be run. If you select zero (0), the test runs indefinitely until an error occurs or the product is turned off. Data gathered from the HTTP, SNMP, and Data Path tests is printed after the tests have completed.
		Execute		No* Yes	No: Do not initiate the selected tests. Yes: Initiate the selected tests.
	Ping Test	Dest Type		IPv4 IPv6	This test is used to check network communications. This test sends link-level packets to a remote network host, then waits for an appropriate response. To run a ping test, set the following items: Dest Type Specify whether the target product is an IPv4 or IPv6 node.
		Dest IPv4		Range: 0 – 255 Default = **127.0.0.1**	Enter the IPv4 address.
		Dest IPv6		Select from a provided list. Default = **: : 1**	Enter the IPv6 address.
		Packet Size		Default = **64**	Specify the size of each packet, in bytes, to be sent to the remote host. The minimum is 64 (default) and the maximum is 2048.

Table 2-53 Jetdirect Menu (continued)

First level	Second level	Third level	Fourth level	Values	Description
		Timeout		Default = **001**	Specify the length of time, in seconds, to wait for a response from the remote host. The maximum is 100.
		Count		Default = **004**	Specify the number of ping test packets to send for this test. Select a value from 0 to 100. To configure the test to run continuously, select 0.
		Print Results		Yes No*	
		Execute		Yes No*	No: Do not initiate the selected tests. Yes: Initiate the selected tests.
	Ping Results	Packets Sent		Default = **00000**	Shows the number of packets (0 - 65535) sent to the remote host since the most recent test was initiated or completed..
		Packets Received		Default = **00000**	Shows the number of packets (0 - 65535) received from the remote host since the most recent test was initiated or completed. The default is 0.
		Percent Lost		Default = **000**	Shows the percent (0 to 100) of ping test packets that were sent with no response from the remote host since the most recent test was initiated or completed.
		RTT Min		Default = **0000**	Shows the minimum detected roundtrip-time (RTT), from 0 to 4096 milliseconds, for packet transmission and response.

Table 2-53 Jetdirect Menu (continued)

First level	Second level	Third level	Fourth level	Values	Description
		RTT Max		Default = **0000**	Shows the maximum detected roundtrip-time (RTT), from 0 to 4096 milliseconds, for packet transmission and response.
		RTT Average		Default = **0000**	Shows the average round-trip-time (RTT), from 0 to 4096 milliseconds, for packet transmission and response.
		Ping In Progress		Yes No*	Shows whether a ping test is in progress. Yes Indicates a test in progress. No Indicates that a test completed or was not run.
		Refresh		Yes No*	When viewing the ping test results, this item upgrades the ping test data with current results. Select the Yes option to upgrade the data, or the No option to maintain the existing data. However, a refresh automatically occurs when the menu times out or you manually return to the main menu.

Table 2-53 Jetdirect Menu (continued)

First level	Second level	Third level	Fourth level	Values	Description
Link Speed				Auto*	The link speed and communication mode of the print server must match the network. The available settings depend on the product and installed print server. Select one of the following link configuration settings: CAUTION: If you change the link setting, network communications with the print server and network product might be lost. The print server uses auto-negotiation to configure itself with the highest link speed and communication mode allowed. If auto-negotiation fails, either the 100TX Half feature or the 10T Half feature is set depending on the detected link speed of the hub/switch port. (A 1000T half-duplex selection is not supported.)
				10T Half	10 Mbps, half-duplex operation.
				10T Full	10 Mbps, full-duplex operation.
				10T Auto	100 Mbps, half-duplex operation.
				100TX Half	100 Mbps, full-duplex operation.
				100TX Full	Limits auto-negotiation to a maximum link speed of 100 Mbps.
				100TX Auto	1000 Mbps, full-duplex operation.

Troubleshooting menu

To display: At the product control panel, select the Administration menu, and then select the Troubleshooting menu.

In the following table, asterisks (*) indicate the factory default setting.

Table 2-54 Troubleshooting menu

First level	Second level	Third level	Fourth level	Values	Description
Event Log M830 only				View* Print	Use to print a list of the 1,000 most recent events in the Event Log. For each event, the printed log shows the error number, page count, error code, and description or personality.
Print Event Log M806 only					Use to print a list of the 1,000 most recent events in the Event Log. For each event, the printed log shows the error number, page count, error code, and description or personality.
View Event Log M830 only					
Paper Path Page				View* (M830 only) Print	Shows how many pages were printed from each tray.
Fax M830 only	Fax T.30 Trace	Print T.30 Report		Print	Use to print or configure the fax T. 30 trace report. T.30 is the standard that specifies handshaking, protocols, and error correction between fax machines.
		When to Print Report		Never automatically print* Print after every fax Print only after fax send jobs Print after any fax error Print only after fax send errors Print only after fax receive errors	Configure the T.30 report to print after certain events. You can choose to print the report after every fax job, every fax job sent, every fax job received, every send error, or every receive error.

Table 2-54 Troubleshooting menu (continued)

First level	Second level	Third level	Fourth level	Values	Description
	Fax V.34			Normal* Off	Use to disable V.34 modulations if several fax failures have occurred or if phone line conditions require it.
	Fax Speaker Mode			Normal* Diagnostic	Used by a technician to evaluate and diagnose fax issues by listening to the sounds of fax modulations.
	Fax Log Entries			On Off*	The standard fax log includes basic information such as the time and whether the fax was successful. The detailed fax log shows the intermediate results of the redial process not shown in the standard fax log.
Print Quality Pages	Print Fuser Test Page			Print	Use to print pages that help you resolve problems with print quality.
Diagnostic Tests	Paper Path Sensors			Select from a list of the product sensors.	Initiates a test of the paper path sensors.
	Paper Path Test	Print Test Page			
		Source Tray		Select from a list of the available trays.	Generates a test page for testing paper handling features. You can define the path that is used for the test in order to test specific paper paths.
		Output Bin (M830 only)		All Bins Face Down Face Up	
		Test Duplex Path		Off* On	

Table 2-54 Troubleshooting menu (continued)

First level	Second level	Third level	Fourth level	Values	Description
		Number of Copies		Range: 1–500 Default = 1	Sets the default number of copies for a copy job. This default applies when the Copy or Quick Copy function is initiated from the product Home screen. The factory default setting is 1.
	Manual Sensor Test			Select from a list of available components. Reset Sensors	Test the product sensors and switches for correct operation. Each sensor is displayed on the control-panel screen, along with its status. Manually trip each sensor and watch for it to change on the screen. Press the Stop button to abort the test.
	Tray/Bin Manual Sensor Test			Select from a list of available components. Reset Sensors	Test the sensors in the trays and bins for correct operation. Each sensor is displayed on the control-panel screen, along with its status. Manually trip each sensor and watch for it to change on the screen. Press the Stop button to abort the test.
	Component Test			Select from a list of available components.	Use to exercise individual parts independently to isolate noise, leaking, or other issues. To start the test, select one of the components. The test will run the number of times specified by the Repeat option. You might be prompted to remove parts from the product during the test. Press the Stop button to abort the test.

Table 2-54 Troubleshooting menu (continued)

First level	Second level	Third level	Fourth level	Values	Description
	Print/Stop Test				Specify the length of time in milliseconds (0-60,000).
	Continuous Scan (M830 only)			2-sided	
	Scanner Tests (M830 only)			Sensors	
Retrieve Diagnostic Data				Create device data file Create zipped debug information file Include crash dump files Clean up debug information Send to E-mail Export to USB	Create files that contain information about the product that can help identify the cause of problems.
Generate Debug Data				Start	

Device Maintenance menu

Backup/Restore menu

To display: At the product control panel, select the Device Maintenance menu, and then select the Backup/Restore menu.

In the following table, asterisks (*) indicate the factory default setting.

Table 2-55 Backup/Restore menu

First level	Second level	Third level	Values	Description
Backup Data	Enable Scheduled Backups	Backup Time	Enter a time	
		Days Between Backups	Enter the number of days	
	Backup Now			
	Export Last Backup			
Restore Data			Insert a USB drive that contains the backup file.	

Calibration/Cleaning menu (M830)

To display: At the product control panel, select the Device Maintenance menu, and then select the Calibration/Cleaning menu.

In the following table, asterisks (*) indicate the factory default setting.

Table 2-56 Calibration/Cleaning menu (M830)

First level	Second level	Values	Description
Cleaning Settings	Auto Cleaning	Off* On	Use to select the Auto Cleaning menu or the Cleaning Interval menu.
	Cleaning Interval	Select from a list of cleaning intervals.	Use to set the interval when the cleaning page should be printed. The interval is measured by the number of pages printed.
	Cleaning Size	Select from a list of support sizes.	Select the paper size to use for the cleaning page.
Cleaning Page		Print	Use to process the cleaning page that was created by using the Create Cleaning Page menu. The process takes up to 1.5 minutes.
Quick Calibration		Start	The product automatically calibrates itself at various times. However, you can calibrate the product immediately if you see problems with print quality. Use this feature to perform a partial calibration. Use this calibration if color density or tone seems incorrect. Before calibrating the product, make sure that the **Ready** indicator displays on the control-panel display. If a job is in progress, the calibration occurs when that job is complete.
Full Calibration		Start	The product automatically calibrates itself at various times. However, you can calibrate the product immediately if you see problems with print quality. Use this feature to perform a full calibration, which can take up to three minutes. Use this calibration if the color layers seem to be shifted on the page. Before calibrating the product, make sure that the **Ready** indicator displays on the control-panel display. If a job is in progress, the calibration occurs when that job is complete.

Table 2-56 Calibration/Cleaning menu (M830) (continued)

First level	Second level	Values	Description
Delay Calibration at Wake/ Power On		Disabled Enabled*	Controls the timing of power-on calibration when the product wakes up or is turned on. Wake: Select if you are not using the feature and want to print jobs immediately when the product wakes up or is turned on, before calibration begins. No: The product will calibrate immediately when it wakes up or is turned on. The product will not print any jobs until it finishes calibrating. Yes: Enables the product that is asleep to accept print jobs before it calibrates. It might start calibrating before it has printed all the jobs it has received. This option allows quicker printing when coming out of sleep mode or when you turn the product on, but print quality might be reduced. NOTE: For the best results, allow the product to calibrate before printing. Print jobs performed before calibration might not be of the highest quality.
Calibrate Scanner			Touch Next to calibrate the device scanner. Messages on the control-panel display will lead you through the calibration process.
Clean Rollers		Reset Cancel	Maintenance History screen is view only. There are two options: the Reset option to reset the page count, or the Cancel option to go back to the previous screen.
Clean Document Feeder Settings	Low Threshold Settings	Range: 0 – 100% Default = 10%	Configure cleaning settings for the document feeder.
	Very Low Settings	Stop Prompt to continue* Continue	

Calibration/Cleaning menu (M806)

To display: At the product control panel, select the Device Maintenance menu, and then select the Calibration/Cleaning menu.

In the following table, asterisks (*) indicate the factory default setting.

Table 2-57 Calibration/Cleaning menu

First level	Second level	Values	Description
Auto Cleaning		Off* On	Use to set an automatic cleaning period for the product.
Cleaning Interval		Select from a list of cleaning intervals.	Use to set the interval when the automatic cleaning page should be printed. The interval is measured by the number of pages printed.
Auto Cleaning Size		Select from a list of support sizes.	Select the paper size to use for the automatic cleaning page.
Print Cleaning Page			Prints a page to clean the paper path. The process takes up to 1.5 minutes.

USB Firmware Upgrade menu

To display: At the product control panel, select the Device Maintenance menu, and then select the USB Firmware Upgrade menu.

Insert a USB storage device with a firmware upgrade bundle into the USB port, and follow the on-screen instructions.

Service menu

To display: At the product control panel, select the Device Maintenance menu, and then select the Service menu.

The Service menu is locked and requires a PIN for access. This menu is intended for use by authorized service personnel. See the Service mode function section in the product troubleshooting manual.

Interpret control-panel messages and event log entries

The control-panel messages and event code entries indicate the current product status or situations that might require action.

NOTE: Event log errors do not appear on the control-panel display. Open the event log to view or print the event log errors.

A control-panel message displays temporarily and might require that you acknowledge the message to resume printing or by touching the Stop button to cancel the job. With certain messages, the job might not finish printing or the print quality might be affected. If the message is related to printing and the auto-continue feature is on, the product will attempt to resume printing after the message has appeared for 10 seconds without acknowledgement.

For some messages, restarting the product might fix the problem. If a critical error persists, the product might require service.

NOTE: Some of the messages in the following sections only appear in the event log.

TIP: Some control-panel messages and event log entries refer to a specific product sensor or switch in the recommended action to solve the problem. See the diagrams in the clear jams section of the product troubleshooting manual for sensor and switch locations.

10.XX.YZ Error Messages

10.00.00 e-Label Memory Error

Description

The product is unable to read the cartridge data.

This message indicates that the product cannot read or write to the e-label of the toner cartridge.

This error can cause the supplies status feature to be disabled.

Recommended action

1. Open the front door, lower the green handle, and then remove the toner cartridge.
2. Check the cartridge e-label. If it is damaged, replace the cartridge.

3. Reinsert the cartridge, push the release button, and then rotate the green handle to the locked position.
4. Close the front door.
5. If the message displays again, turn the product off then on.
6. If the error persists, replace the toner cartridge.

10.00.10 e-Label Missing Memory Error

Description

The product is unable to detect the e-label.

This message indicates that the product has determined that the e-label is missing.

This error can cause the supplies status feature to be disabled.

Recommended action

1. Open the front door, lower the green handle, and then remove the toner cartridge.
2. Check the cartridge e-label. If it is damaged, replace the cartridge.
3. Reinsert the cartridge, push the release button, and then rotate the green handle to the locked position.
4. Close the front door.
5. If the message displays again, turn the product off then on.
6. If the error persists, replace the toner cartridge.
7. If the error persists, reconnect the connector (J304) on the DC controller PCA.

10.00.50 Cartridge seal roll up error

Description

The product encountered a toner cartridge roll up error.

Recommended action

1. Reinstall the cartridge.
2. Turn the product off and then on.
3. Reconnect the connector (J305) on the DC controller PCA.
4. Replace the cartridge sensor assembly.
5. Replace the DC controller PCA.

10.23.50

Description

The fuser kit life was reset above the order threshold.

Recommended action

No action necessary.

10.23.51

Description

The fuser kit life was reset above the replace threshold.

Recommended action

No action necessary.

10.23.52

Description

The fuser kit life was reset above the reset threshold.

Recommended action

No action necessary.

10.23.70 Printing Past Very Low

Description

The product indicates when the fuser kit is very low. The actual remaining fuser kit life might vary. You do not need to replace the fuser kit at this time unless print quality is no longer acceptable. After an HP supply has reached the very low threshold, the HP premium protection warranty ends.

Recommended action

If print quality is no longer acceptable, replace the fuser kit.

See the parts chapter in the service manual for the fuser kit part number. Advise the customer that HP recommends that they have replacement supplies available to install when the print quality is no longer acceptable.

10.32.00 Unauthorized supply

Description

This error message displays when a supply (or supplies) has been inserted into the product and the product determines that HP is in the OEM field, but the supply (or supplies) does not pass the new authentication test.

This error will only be shown if the product currently has all genuine supplies.

Recommended action

Choose to continue past this error by touching **OK**.

If you believe you purchased a genuine HP supply, go to www.hp.com/go/anticounterfeit. Any product repair required as a result of using non-HP or unauthorized supplies is not covered under warranty.

10.XX.33 Used Supply In Use

Description

The toner cartridge is used.

10.00.33 (event code) Used toner cartridge

Recommended action

If you believe this is a genuine HP supply, go to www.hp.com/go/anticounterfeit.

Using a cartridge that is near its end-of-life can cause this event code.

10.XX.34 Used Supply In Use

Description

The toner cartridge is used.

10.00.34 (event code) Black toner cartridge

Recommended action

If you believe this is a genuine HP supply, go to www.hp.com/go/anticounterfeit.

Removing a cartridge from one product and then installing it in a different product (for testing functionality) will cause this event code.

10.XX.40 Genuine HP Supplies Installed

Description

A genuine HP toner cartridge has been installed.

10.00.40 (event code) Black toner cartridge

Recommended action

No action necessary.

10.XX.41 Unsupported Supply in Use

Description

The installed toner cartridge is for a different product.

10.00.41 (event code) Black toner cartridge

Recommended action

Remove the toner cartridge, and then install the correct cartridge for this product.

See the parts chapter in the service manual for the correct cartridge part number.

10.XX.70 Printing past very low

Description

The product indicates when a supply level is very low. The actual remaining toner cartridge life might vary.

You do not need to replace the toner cartridge at this time unless print quality is no longer acceptable. After an HP supply has reached the very low threshold, the HP premium protection warranty ends.

10.00.70 (event code) Black toner cartridge

Recommended action

If print quality is no longer acceptable, replace the toner cartridge.

See the parts chapter in the service manual for the correct cartridge part number. Advise the customer that HP recommends that they have replacement supplies available to install when the print quality is no longer acceptable.

10.YY.15 Install <supply>

Description

The indicated supply has been removed or installed incorrectly.

10.00.15 (event code) Black toner cartridge

10.23.15 (event code) Fuser kit

Recommended action

Replace or install the indicated supply.

See the parts chapter in the service manual for the correct supply or kit part number.

10.YY.35 Incompatible <supply>

Description

The indicated supply is not compatible with this product.

10.00.35 (event code) Black toner cartridge

10.23.35 (event code) Fuser kit

Recommended action

The fuser might be hot. Be careful when removing the fuser.

Install a supply that is designed for this product.

See the parts chapter in the service manual for the correct supply part number.

11.XX.YZ Error Messages

11.00.01 or 11.00.02 Internal clock error

Description

This message indicates a problem with the formatter's real time clock.

The product real time clock has experienced an error.

01=dead clock

02=dead real time clock

Recommended action

1. Whenever the product is turned off and then turned on again, set the time and date on the control panel.
2. If the error persists, you might need to replace the formatter.

13.XX.YZ Error Messages

13.60.Az

Description

Stacker Entrance Sensor Stay Jam . Jam in the top left door

Finishers upper-feed-path-entry sensor (PI103) is remaining activated longer than expected, suggesting that paper has jammed at the sensor.

The specific jam error code will be one of the following forms:

- 13.60.A1
- 13.60.A2
- 13.60.A3

Recommended action

1. Remove any media in the upper paper path that might be activating sensor PI33..
2. Verify that the sensor flag is not damaged, moves freely, and is correctly aligned with the sensor body.
3. Carefully clean the sensor body by gently blowing clean air across the sensor to remove dust and debris.
4. Verify that the wiring at the sensor is not damaged and that the connector J708 on the stacker controller PCA is fully seated

13.60.Dz

Description

Stacker Entrance Sensor Delay Jam

Jam in the top left door.

The engine signals the finisher that paper is about to enter the finisher from either the Switch Back assembly or the Hole Punch assembly if installed.

The finisher's upper-feed-path-entry sensor (PI103), which detects paper entering the finisher, does not detect the paper within the expected time period triggering the error.

The specific jam error code will be one of the following forms:

- 13.60.D1
- 13.60.D2
- 13.60.D3

Recommended action

1. Print and analyze the event log, looking for related jams occurring either in the Switch Back assembly or the Hole Punch assembly. These errors might be the result of media failing to reach the output device in the correct amount of time. Troubleshoot all Printer Engine Jams first.
2. Make sure that media is in good condition, and not wrinkled or damaged.
3. Make sure that the correct paper size in the trays is selected according the paper size being fed.
4. Check the finisher entry-point guides for damage.
5. Verify where the leading edge of the media is when the Jam occurs.
6. has media made it through Switch Back registration?

   Test M2 registration motor
7. Verify that the finisher rollers are turning before the media leaves the Printer. If the rollers are not turning, test motor M110 and M101 by using the finisher component test from the control- activate during the test, check the connectors for motor M110 (Saddle inlet Motor) M101 (inlet motor).
8. Make sure that connector J17 is fully seated on the stacker controller PCA.. If the error persists, replace motor M110 or M101 or the corresponding assembly.
9. Replace the stacker controller PCA.
10. If media is found in the finisher but has not reached sensor PI103, perform the following steps:
    - Check the upper and lower guides and rollers in the paper path for damage.
    - Make sure that the media diverter gate is not blocking the paper path.
11. If media is found in the finisher-covering sensor PI103 (the sensor is not detecting the media), perform the following steps:
    - Check the sensor for obstructions. .
    - Verify that the sensor flag is not damaged, moves freely, and is correctly aligned with the sensor body.
    - Make sure that the lower end of the flag is not damaged and is correctly positioned to activate the sensor.
12. Make sure that the sensor is securely fastened to the chassis.
13. Carefully clean the sensor body by gently blowing clean air across the sensor to remove dust and debris.
14. Verify that the wiring at the sensor is not damaged and that the intermediate connector J1007 and connector J3 on the stacker controller PCA are fully seated.
15. Replace the sensor if necessary.
16. Only if the error persists, Replace the stacker controller PCA.

13.60.FF

Description

Stacker Initial Jam

Jam in the top left door (left bins).

Finisher stay jam at either PI103 or PI104 when engine powered on.

When the engine is powered on, the finisher's upper-feed-path-entry sensor (PI103) or the upper-feed-path-exit sensor (PI104) is activated suggesting that there is paper in the upper paper path of the finisher at sensors PI103 or PI104.

Recommended action

1. Open the top door and remove any media in the paper path (media detected at PI103).
2. Raise the upper paper path (exit) delivery rollers and remove any media in the paper path (media detected at PI104).
3. Remove all paper found from the top left door area.
4. Verify that the sensor flags are not damaged, move freely, and are correctly aligned with the sensor body and properly mounted. Also check wiring and connectors for damage or loose connections
5. Carefully clean the sensor body by gently blowing clean air across the sensor to remove dust and debris.
6. Verify that the sensor connectors (J2 and J3) are fully seated on the stacker controller PCA.

   .

   Replace sensor PI103 and PI104
7. Only if the error persists, replace the stacker controller PCA..

13.64.Az

Description

Stacker Delivery Sensor Stay Jam : Jam in the top left door (left bins)

Finisher's upper-paper-path-exit sensor (PI104) remains activated longer than expected suggesting that paper has jammed at the sensor.

The specific jam error code will be one of the following forms:

- 13.64.A1
- 13.64.A2
- 13.64.A3

Control-panel diagnostics: M101 (entrance motor), SL102 (buffer-roller solenoid), and SL103 (output-roller solenoid)

PI104 is located on the front frame of the finisher, above the main stapler unit.

Recommended action

1. Remove any media in the upper paper path that might be activating sensor PI104.
2. Carefully clean the sensor body, by gently blowing clean air across the sensor to remove dust and debris.
3. Verify that the sensor flag is not damaged, moves freely, and is correctly aligned with the sensor body.
4. Lift-swing-guide assembly at the paper exit area to output bins and inspect for jammed paper, obstructions, or damage.
5. Run a diagnostic through the engine control panel and turn on M101 (entrance motor) to observe gear rotations on the upper-rear frame of the finisher. Ensure that the first delivery rollers and buffer rollers that pass paper to and from PI104 are rotating.
6. Test SL102 (buffer-roller solenoid) and SL103 (output-roller solenoid) using the control-panel diagnostics.
7. Check wiring from sensor PI104 to stacker-control-board connector J2 for damage.
8. Only if the error persists and none of the previous steps correct the problem, replace the stacker controller PCA.

13.64.Dz

Description

Stacker Delivery Sensor Delay Jam : Jam in the top left door.

Upper-paper-path-entry sensor (PI103) has signaled that paper has passed but upper paper-path-exit sensor PI104 does not actuate within the expected time, suggesting that the paper has jammed between PI103 and PI104 in the upper paper path.

The specific jam error code will be one of the following forms:

- 13.64.D1
- 13.64.D2
- 13.64.D3

Recommended action

1. Remove any media jammed in the upper paper path between sensor PI103 and sensor PI104.
2. Check the paper path between sensor PI103 and sensor PI104 for obstructions that may be preventing the media from reaching PI104.
3. Verify that the PI104 sensor flag is not damaged, moves freely, and is correctly aligned with the sensor body.
4. Make sure that sensor PI104 is securely fastened to the chassis and wiring is properly connected to sensor.

NOTE: Sensor PI104 is located on the front frame of the finisher, directly over the primary stapler.

5. Verify that the wiring at the sensor is not damaged and that the connector J2 on the stacker controller PCA is fully seated.
6. Only if the error persists and none of the previous steps correct the problem, replace the stacker controller PCA.

13.67.Az

Description

Switchback Entrance Sensor Stay Jam — Jam in the stapler/stacker connection.

Switchback entrance sensor (SR101) remains activated longer than expected suggesting that paper has jammed at the sensor.

The specific jam error code will be one of the following forms:

- 13.67.A1
- 13.67.A2
- 13.67.A3

Recommended action

1. Remove any media in the upper paper path that might be activating sensor SR101.
2. Verify that the finisher is securely fastened to the engine.
3. Make sure that the finisher and Printer are correctly aligned.
4. Check the finisher entry-point guides for damage.
5. Carefully clean the sensor body, by gently blowing clean air across the sensor to remove dust and debris.
6. Verify that the sensor flag is not damaged, moves freely, and is correctly aligned with the sensor body.
7. Perform Sensor test on SR101. If not functioning or damaged replace Sensor.
8. Check wiring from sensor SR101 to the Reverse Driver PCA connector for damage.
9. Only if the error persists and none of the previous steps correct the problem, replace the Reverse Driver PCA.

13.67.Dz

Description

Switchback Entrance Sensor Delay Jam — Jam in the stapler/stacker connection.

The engine signals the finisher that paper is about to enter the finisher Switchback assembly from the Printer.

The Switchback inlet Sensor SR101, which detects paper entering the finisher, does not detect the paper within the expected time period triggering the error

The specific jam error code will be one of the following forms:

- 13.67.D1
- 13.67.D2
- 13.67.D3

Recommended action

1. Remove any media in the upper paper path that might be activating sensor SR101.
2. Print and analyze the event log, looking for Printer- or MFP-related jams occurring either in the fuser or in the duplexer. These errors might be the result of media failing to reach the output device in the correct amount of time. Troubleshoot all Printer Engine Jams first.
3. Make sure that media is in good condition, and not wrinkled or damaged.
4. Make sure that the correct paper size in the trays is selected according the paper size being fed.
5. Verify that the finisher is securely fastened to the engine.
6. Make sure that the finisher and Printer are correctly aligned.
7. Adjust the finisher castors to obtain a uniform gap between the finisher and the engine.
8. With the engine-to-finisher gap correct, make sure that the finisher paper path entry point is aligned with the Printer exit point.
9. Check the finisher entry-point guides for damage.
10. Carefully clean the sensor body, by gently blowing clean air across the sensor to remove dust and debris.
11. Verify that the sensor flag is not damaged, moves freely, and is correctly aligned with the sensor body.
12. Perform Sensor test on SR101. If not functioning or damaged replace the Sensor.
13. Check wiring from sensor SR101 to the Reverse Driver PCA connector for damage.
14. Only if the error persists and none of the previous steps correct the problem, replace the Reverse Driver PCA.

13.67.FF

Description

Switchback Initial Jam — Jam in the stapler/stacker connection.

When the engine is powered on, the finisher's Switchback inlet sensor (SR101) is activated suggesting that there is paper in the upper paper path of the finisher at sensors SR101

Recommended action

1. Remove any media in the upper paper path that might be activating sensor SR101.
2. Verify that the finisher is securely fastened to the engine.
3. Check the finisher entry-point guides for damage.
4. Carefully clean the sensor body, by gently blowing clean air across the sensor to remove dust and debris.

5. Verify that the sensor flag is not damaged, moves freely, and is correctly aligned with the sensor body.
6. Perform Sensor test on SR101. If not functioning or damaged replace Sensor.
7. Check wiring from sensor SR101 to the Reverse Driver PCA connector for damage.
8. Only if the error persists and none of the previous steps correct the problem, replace the Reverse Driver PCA.

13.68.Az

Description

Switchback Registration Sensor Stay Jam — Jam in the stapler/stacker connection.

Switchback Registration sensor (SR102) remains activated longer than expected suggesting that paper has jammed at the sensor.

The specific jam error code will be one of the following forms:

- 13.68.A1
- 13.68.A2
- 13.68.A3

Recommended action

1. Remove any media in the upper paper path that might be activating sensor SR102.
2. Verify that the finisher is securely fastened to the engine and make sure that the finisher and Printer are correctly aligned.
3. Check the finisher entry-point guides for damage.
4. Carefully clean the sensor body, by gently blowing clean air across the sensor to remove dust and debris.
5. Verify that the sensor flag is not damaged, moves freely, and is correctly aligned with the sensor body.
6. Run a diagnostic through the engine control panel and turn on M2 (Registration motor) to observe gear rotations on the upper-left rear frame of the finisher.
7. Check wiring from sensor SR102 to the Reverse Driver PCA connector for damage.
8. Replace the Reverse assembly

13.68.Dz

Description

Switchback Registration Sensor Delay Jam — Jam in the stapler/stacker connection.

Media did not reach SR102 (switch back registration sensor) after passing SR101 (Switch Back inlet Sensor) within the expected time period triggering the error.

The specific jam error code will be one of the following forms:

- 13.68.D1
- 13.68.D2
- 13.68.D3

Recommended action

1. Remove any media in the upper paper path that might be activating sensor SR102.
2. Verify that the finisher is securely fastened to the engine. Make sure that the finisher and Printer are correctly aligned.
3. Carefully clean the sensor body, by gently blowing clean air across the sensor to remove dust and debris.
4. Verify that the sensor flag is not damaged, moves freely, and is correctly aligned with the sensor body.
5. Run a diagnostic through the engine control panel and turn on M2 (Registration motor) to observe gear rotations on the upper-left rear frame of the finisher.
6. Test SL101 (Switch Back inlet flapper solenoid) using the control-panel diagnostics.
7. Check wiring from sensor SR102 to the Reverse Driver PCA connector for damage.
8. Replace the Reverse assembly

13.69.Az

Description

Switchback Lower Sensor Stay Jam — Jam in the stapler/stacker connection.

Switchback path sensor (SR103) remains activated longer than expected suggesting that paper has jammed at the sensor.

The specific jam error code will be one of the following forms:

- 13.69.A1
- 13.69.A2
- 13.69.A3

Recommended action

1. Remove any media in the upper paper path that might be activating sensor SR103.
2. Verify that the finisher is securely fastened to the engine.
3. Make sure that the finisher and Printer are correctly aligned.
4. Check the finisher entry-point guides for damage.
5. Carefully clean the sensor body, by gently blowing clean air across the sensor to remove dust and debris.
6. Verify that the sensor flag is not damaged, moves freely, and is correctly aligned with the sensor body.

7. Perform Sensor test on SR103. If not functioning or damaged replace Sensor.
8. Check wiring from sensor SR103 to the Reverse Driver PCA connector for damage.
9. Only if the error persists and none of the previous steps correct the problem, replace the Reverse Driver PCA.

13.69.Dz

Description

Switchback Registration Sensor Delay Jam — Jam in the stapler/stacker connection.

Media did not reach SR103 (switchback path sensor) after passing SR101 (Switch Back inlet Sensor) within the expected time period triggering the error.

The specific jam error code will be one of the following forms:

- 13.69.D1
- 13.69.D2
- 13.69.D3

Recommended action

1. Remove any media in the upper paper path that might be activating sensor SR103.
2. Verify that the finisher is securely fastened to the engine. Make sure that the finisher and Printer are correctly aligned.
3. Carefully clean the sensor body, by gently blowing clean air across the sensor to remove dust and debris.
4. Verify that the sensor flag is not damaged, moves freely, and is correctly aligned with the sensor body.
5. Run a diagnostic through the engine control panel and turn on M2 (Registration motor) and M1 Switchback Motor to observe gear rotations on the upper-left rear frame of the finisher.
6. Test SL101 (Switch Back inlet flapper solenoid) using the control-panel diagnostics.
7. Check wiring from sensor SR103 to the Reverse Driver PCA connector for damage.
8. Replace the Reverse assembly

13.84.Az

Description

Accumulator Tray Stay Jam — Jam in the top left door.

Upper-paper-path-entry sensor (PI104) has signaled that paper has passed but the output bin Sensor PI112 or PI111 does not actuate within the expected time.

The specific jam error code will be one of the following forms:

- 13.84.A0
- 13.84.A1

- 13.84.A2
- 13.84.A3

Recommended action

1. Remove any media jammed in the upper paper path between sensor PI104 and output bin.
2. Check the accumulator for damage or obstructions.
3. Ensure M109 Trailing Edge Assist Motor functions properly
4. Replace M109 or Assembly as needed.

13.89.3z

Description

Stacker Staple Jam — Stapler 1 Jam in the front left door.

When the staple motor (M41) is rotated forward, the staple home-position sensor (PI120) does not turn back on after the prescribed time has elapsed after it goes off, and the staple home-position sensor (PI120) turns on within the prescribed time after the staple motor (M41) is rotated backwards.

The specific jam error code will be one of the following forms:

- 13.89.30
- 13.89.31
- 13.89.32

Recommended action

1. Check the stapler unit for jammed staples.
2. Check the stapler unit for loose staples and paper dust.
3. Inspect the stapler unit for damage.
4. Remove the stapler cartridge and make sure HP-approved staples are being used.
5. Verify that the wiring at the stapler unit and the connector are not damaged.
6. Install new staple cartridge and retest.
7. If the error persists, replace the stapler unit.

13.90.Az

Description

Booklet Inlet Sensor Stay Jam — Jam in the front left door

Finisher stay jam at booklet-making paper entry sensor (PI22)

Occurs when the booklet-making paper-entry sensor (PI22) remains activated longer than expected, suggesting that there is a paper jam at the sensor.

The specific jam error code will be one of the following forms:

- 13.90.A0
- 13.90.A3

Recommended action

1. Remove any media in the upper paper path that might be activating sensor PI22.
2. Verify that the sensor flag is not damaged, moves freely, and is correctly aligned with the sensor body.
3. Carefully clean the sensor body by gently blowing clean air across the sensor to remove dust and debris.
4. Verify that the wiring at the sensor is not damaged and that the intermediate connectors between sensor PI22 and connector J21 on saddle-stitcher controller PCA for damage and proper connections.
5. If issue still remains, replace sensor

13.90.Dz

Description

Booklet Inlet Sensor Delay Jam — Jam in the front left door

Finisher delay jam at booklet-making paper entry sensor (PI22).

Error occurs when booklet making function is selected and after the engine signals the finisher that it is delivering paper to the finisher. The booklet-making paper-entry sensor (PI22) is not activated within the expected time period after receiving the engine's delivery signal, suggesting that a paper jam has occurred somewhere between the Reversing Assembly and sensor PI22.

The specific jam error code will be one of the following forms:

Control-panel diagnostics: M9 (Inlet Motor), SL5 (Inlet-Switch Solenoid)

- 13.90.D0
- 13.90.D3

Recommended action

1. Print and analyze the event log, looking for related jams occurring either in the Switch Back assembly or the Hole Punch assembly. These errors might be the result of media failing to reach the output device in the correct amount of time. Troubleshoot all Printer Engine Jams first.
2. Make sure that media is in good condition, and not wrinkled or damaged.
3. Make sure that the correct paper size in the trays is selected according the paper size being fed.
4. Check the finisher entry-point guides for damage.
5. Verify where the leading edge of the media is when Jam occurs.
6. Has media made it through Switch Back registration?
   - Test M2 registration motor
7. Verify that the finisher rollers are turning before the media leaves the Printer.

- If the rollers are not turning, test motor M110 by using the finisher component test from the control-activate during the test, check the connectors for motor M110 (Saddle inlet Motor)

8. Make sure that connector J17 is fully seated on the stacker controller PCA. If the error persists, replace motor M9 or the saddle-paper-feeder assembly for the type finisher you are working on.
9. Only if the error persists and none of the previous steps correct the problem, replace the stacker controller PCA.

If media is found in the finisher but has not reached sensor PI22, perform the following steps:

1. Check the sensor for obstructions.
2. Verify that the sensor flag is not damaged, moves freely, and is correctly aligned with the sensor body. Make sure that the lower end of the flag is not damaged and is correctly positioned to activate the sensor.
3. Make sure that the sensor is securely fastened to the chassis.
4. Carefully clean the sensor body by gently blowing clean air across the sensor to remove dust and debris.
5. Verify that the wiring at the sensor is not damaged and that the intermediate connectors between the sensor and connector J21 on the saddle-stitcher controller PCA are fully seated.
6. Replace the sensor if necessary. If PI22 is determined to be the failure point, replace the saddle-paper-feeder assembly, which includes PI22.
7. Only if the error persists and none of the previous steps correct the problem, replace the saddle-stitcher controller PCA.

If media is found in the finisher cover sensor PI22 (the sensor is not detecting the media), perform the following steps:

1. Check the upper and lower guides and rollers in the paper path for damage.
2. Make sure that the media-diverter gate (saddle-stitch flapper) is not blocking the paper path.
3. Test solenoid SL5 (inlet-switch solenoid) using the finisher component test from the control panel display. SL5 should be opening and closing the media diverter gate (saddle stitch flapper).

13.92.FF

Description

Booklet Initial Jam — Jam in the front left door.

Occurs when paper is detected by one of the sensors on the paper-sensor board (PI18, PI19, PI20), vertical-path-paper sensor (PI17), booklet-delivery sensor (PI11), paper positioning-plate paper sensor (PI8), or booklet-making paper-entry sensor (PI22) when the machine is powered on.

Recommended action

1. Remove media from the booklet-maker paper path.
2. Verify that the sensor flags are not damaged, move freely, and are correctly aligned with the sensor bodies.
3. Carefully clean each sensor body by gently blowing clean air across each sensor to remove dust and debris.

4. Make sure that connectors J6, J9, J10,J13, and J21 are fully seated on the saddle-stitcher controller PCA.
5. Only if the error persists and none of the previous steps correct the problem, replace the saddle-stitcher controller PCA.

13.94.Az

Description

Booklet Deliver Sensor Stay Jam — Jam in the front left door.

Finisher stay jam at the booklet-delivery sensor (PI11) or the vertical-paper-path sensor (PI17)

Occurs when the booklet-delivery sensor (PI11) remains activated longer than expected after sensing the arrival of the new booklet from the folding rollers.

Also occurs when the vertical-paper-path sensor (PI17) remains activated longer than expected after the paper has already passed through the folding rollers and is now detected by the booklet-delivery sensor (PI11).

The specific jam error code will be one of the following forms:

- 13.94.A0
- 13.94.A3

Recommended action

1. Check the folder-roller area for a jam.
2. Test the folding motor (M2) by using the finisher component test from the control panel display. Remove the finisher rear cover before starting the test and make sure that the folding rollers are rotating when motor M2 is on.
3. Check sensor PI11 and PI17 for damage.
4. Make sure that the sensors are not obstructed.
5. Make sure that sensor PI11 and sensor PI17 are securely fastened to the chassis.
6. Replace Motor or assembly as needed.

13.94.Dz

Description

Booklet Deliver Sensor Delay Jam — Jam in the front left door.

Finisher stay jam at the booklet-delivery sensor (PI11) or the vertical-paper-path sensor (PI17)

Occurs when the folded booklet exits the folding rollers and does not reach the booklet delivery sensor (PI11) within the expected time.

The specific jam error code will be one of the following forms:

- 13.94.D0
- 13.94.D3

Recommended action

1. Check the folder-roller area for a jam or media wrapped around the rollers.
2. Check sensor PI11 for damage.
3. Make sure that the sensor is not obstructed.
4. Make sure that sensor PI11 is securely fastened to the chassis.
5. Replace Motor or assembly as needed.

13.96.33

Description

Stapler 2 Jam

Booklet Staple Jam (Front) - Jam in booklet stapler 2

Finisher jam: front-booklet stapler (SW7) When the rear-staple motor (M7) is rotated forward, the staple home-position sensor (SW7) does not turn back on after the prescribed time has elapsed after it goes off (0.4 seconds).

Recommended action

1. Check the front-booklet stapler unit for jammed staples.
2. Check the front-booklet stapler unit for loose staples.
3. Inspect the front-booklet stapler unit for damage.
4. Verify that HP approved staples for this stapler are being used.
5. Verify that the wiring at the stapler unit and the connector are not damaged.
6. Replace the staple cartridge.

   NOTE: Replace both the front and rear cartridges at the same time so that the staple low sensors will properly detect the level of staples in the cartridges.

7. Only if the error persists and none of the previous steps correct the problem, replace the saddle-stapler assembly.

13.97.33

Description

Stapler 3 Jam

Booklet Staple Jam (Rear) - Jam in booklet stapler 3

Finisher jam: rear booklet stapler (SW5) When the rear-staple motor (M6) is rotated forward, the staple home-position sensor (SW5) does not turn back on after the prescribed time has elapsed after it goes off (0.4 seconds).

Recommended action

1. Check the rear-booklet stapler unit for jammed staples.
2. Check the rear-booklet stapler unit for loose staples.

3. Inspect the rear-booklet-stitch stapler unit for damage.
4. Verify that HP approved staples for this stapler are being used.
5. Verify that the wiring at the stapler unit and the connector are not damaged.
6. Replace the staple cartridge.

13.98.A3

Description

Booklet Output Sensor Stay Jam — Jam in the front left door (booklet).

Occurs when the folded booklet exits the folding rollers and passes PI11 booklet delivery sensor but does not reach the booklet delivery sensor (PI6) within the expected time.

Recommended action

1. Check the folder-roller area for a jam or media wrapped around the rollers.
2. Check sensor PI6 for damage.
3. Make sure that the sensor is not obstructed.
4. Make sure that sensor PI6 is securely fastened to the chassis.
5. Replace sensor or assembly as needed.

13.98.D3

Description

Booklet Output Sensor Delay Jam — Jam in the front left door (booklet).

Finisher stay jam at the booklet-output sensor (PI6)

Media is present at P6

Recommended action

1. Check the folder-roller area for a jam or media wrapped around the rollers.
2. Check sensor PI6 for damage.
3. Make sure that the sensor is not obstructed.
4. Make sure that sensor PI6 is securely fastened to the chassis.
5. Replace sensor or assembly as needed

13.A1.D1

Description

Paper Delay Jam in Tray 1

This jam occurs when the media does not reach the Tray 1 feed sensor (PS2502) in the designated amount of time after the start of media pick-up from Tray 1.

This is a no-pick jam from Tray 1.

Recommended action

1. Clear the jam in the area indicated.
2. Close the door to allow the product to attempt to clear the jam.
3. Check and replace the Tray 1 pickup rollers as needed.
4. Open the following menus:
   - **Administration**
   - **Troubleshooting**
   - **Diagnostic Tests**
5. Test PS2502 using the sensor test to verify that the sensor is functioning correctly.
6. Run the Tray 1 pickup/feed motor drive test to verify that the feed motor is functioning correctly.
7. If it is not, replace the right door assembly.

13.A1.FF

Description

Residual Media Jam in Tray 1

This jam occurs when residual media is detected at the Tray 1 feed sensor (PS2502) at power on.

Recommended action

1. Clear the jam in the area indicated.
2. Close the door to allow the product to attempt to clear the jam.
3. Make sure that the sensor PS2502 flag moves smoothly and that the sensor is not damaged. If the flag is damaged, replace Tray 1.
4. Open the following menus:
   - **Administration**
   - **Troubleshooting**
   - **Diagnostic Tests**
5. Test PS2502 using the Manual sensor test to verify that the sensor is functioning correctly.
6. Run the Tray 1 pickup/feed motor drive test to verify that the feed motor is functioning correctly. If it is not, replace the right door assembly.
7. If the issue is not resolved, replace the right door assembly.

13.A2.D2

Description

Jam in Tray 2

This jam occurs when the media does not reach the Tray 2A feed sensor (PS1402) in the designated amount of time after the start of media pick-up from Tray 2.

This is a no-pick jam from tray 2.

Recommended action

1. Open Tray 2, remove any jammed paper, and then close the tray.
2. Open and close the upper right door to allow the product to attempt to clear the jam.
3. Make sure that the Tray 2 pickup, feed, and separation roller are installed correctly and show no damage or wear.
4. Clean or replace the pickup/feed rollers as needed.
5. Check the connectors at the sensor, feed motor, and the DC controller PCA.
6. Open the following menus:
   - **Administration**
   - **Troubleshooting**
   - **Diagnostic Tests**
7. Run the Tray 2 pickup/feed motor drive test to verify that the feed motor is functioning correctly. If it is not, replace the pickup assembly.
8. Test PS1402 using the Tray/Bin Manual sensor test to verify that the sensor is functioning correctly.
9. If the error persists, replace the paper pickup assembly.

13.A2.FF

Description

Residual Media Jam in Tray 2

This jam occurs when residual media is detected at the Tray 2A feed sensor (PS1402), the Tray 2B feed sensor (PS1401), or the Tray 2C path feed sensor (PS8) at power on.

Recommended action

1. Open Tray 2, remove any jammed paper, and then close the tray.
2. Open and close the upper right door to allow the product to attempt to clear the jam.
3. Make sure that the Tray 2 pickup, feed, and separation roller are installed correctly and show no damage or wear.
4. Clean or replace the pickup/feed rollers as needed.
5. Check the connectors at the sensor, feed motor, and the DC controller PCA.
6. Check connector (J221) on the DC controller PCA and interconnect J21.
7. Open the following menus:

- Administration
- Troubleshooting
- Diagnostic Tests

8. Test PS1402, PS1401, and PS8 using the Tray/Bin Manual sensor test to verify that the sensors are functioning correctly.
9. Run the Tray 2 pickup/feed motor drive test to verify that the feed motor is functioning correctly (listen for the motor to activate). If it is not, replace the pickup assembly.
10. If the error persists, replace the paper pickup assembly.

13.A3.D3

Description

Jam In Tray 3

This jam occurs when the media does not reach the Tray 3A feed sensor (PS1404) in the designated amount of time after the start of media pick-up from Tray 3.

This is a no-pick jam from Tray 3.

Recommended action

1. Open Tray 3, remove any jammed paper, and then close the tray.
2. Open and close the upper right door to allow the product to attempt to clear the jam.
3. Make sure that the Tray 3 pickup, feed, and separation roller are installed correctly and show no damage or wear.
4. Clean or replace the pickup/feed rollers as needed.
5. Check the connectors at the sensor, feed motor, and the DC controller PCA.
6. Check connector (J221) on the DC controller PCA and interconnect J21.
7. Open the following menus:
   - Administration
   - Troubleshooting
   - Diagnostic Tests
8. Test PS1404 using the Tray/Bin Manual sensor test to verify that the sensors are functioning correctly.
9. Run the Tray 3 pickup/feed motor drive test to verify that the feed motor is functioning correctly. If it is not, replace the pickup assembly.
10. If the error persists, replace the paper pickup assembly.

13.A3.FF

Description

Residual Media Jam in Tray 3

This jam occurs when residual media is detected at the Tray 3A feed sensor (PS1404) or the Tray 3B feed sensor (PS1403) at power on.

Recommended action

1. Open Tray 3, remove any jammed paper, and then close the tray.
2. Open and close the upper right door to allow the product to attempt to clear the jam.
3. Make sure that the Tray 3 pickup, feed, and separation roller are installed correctly and show no damage or wear.
4. Clean or replace the pickup/feed rollers as needed.
5. Check the connectors at the sensor, feed motor, and the DC controller PCA.
6. Check connector (J221) on the DC controller PCA and interconnect J21.
7. Open the following menus:
   - **Administration**
   - **Troubleshooting**
   - **Diagnostic Tests**
8. Test PS1404 using the Tray/Bin Manual sensor test to verify that the sensors are functioning correctly.
9. Touch **Component Test**.
10. Run the Tray 3 pickup/feed motor drive test to verify that the feed motor is functioning correctly. If it is not, replace the pickup assembly.
11. If the error persists, replace the paper pickup assembly.

13.A4.D4

Description

Jam In Tray 4

This jam occurs when the media does not reach the Tray 4 feed sensor (PS3302) in the designated amount of time after the start of media pick-up from Tray 4.

This is a no-pick jam from Tray 4.

Recommended action

1. Open Tray 4, remove any jammed paper, and then close the tray.
2. Open and close the HCI right door to allow the product to attempt to clear the jam.
3. Make sure that the Tray 4 pickup, feed, and separation roller are installed correctly and show no damage or wear.
4. Clean or replace the pickup/feed rollers as needed.
5. Check the connectors at the sensor, feed motor, and the HCI controller PCA.
6. Open the following menus:

- Administration
- Troubleshooting
- Diagnostic Tests

7. Test PS3302 using the Tray/Bin Manual sensor test to verify that the sensor are functioning correctly.
8. Touch **Component Test**.
9. Run the Tray 4 pickup/feed motor drive test to verify that the feed motor is functioning correctly. If it is not, replace the tray pickup assembly.
10. If the error persists, replace the tray pickup assembly.

13.A4.FF

Description

Residual Media Jam in Tray 4

This jam occurs when residual media is detected at the Tray 4 feed sensor (PS3302) at power on.

Recommended action

1. Open Tray 4, remove any jammed paper, and then close the tray.
2. Open and close the HCI right door to allow the product to attempt to clear the jam.
3. Make sure that the Tray 4 pickup, feed, and separation roller are installed correctly and show no damage or wear.
4. Clean or replace the pickup/feed rollers as needed.
5. Check the connectors at the sensor, feed motor, and the HCI controller PCA.
6. Open the following menus:
   - Administration
   - Troubleshooting
   - Diagnostic Tests
7. Test PS3302 using the Tray/Bin Manual sensor test to verify that the sensors are functioning correctly.
8. Touch **Component Test**.
9. Run the Tray 4 pickup/feed motor drive test to verify that the feed motor is functioning correctly. If it is not, replace the tray pickup assembly.
10. If the error persists, replace the tray pickup assembly.

13.A5.D5

Description

Jam In Tray 5

This jam occurs when the media does not reach the Tray 5 feed sensor (PS3305) in the designated amount of time after the start of media pick-up from Tray 5.

This is a no-pick jam from Tray 5.

Recommended action

1. Open Tray 5, remove any jammed paper, and then close the tray.
2. Open and close the HCI right door to allow the product to attempt to clear the jam.
3. Make sure that the Tray 5 pickup, feed, and separation roller are installed correctly and show no damage or wear.
4. Clean or replace the pickup/feed rollers as needed.
5. Check the connectors at the sensor, feed motor, and the HCI controller PCA.
6. Open the following menus:
   - **Administration**
   - **Troubleshooting**
   - **Diagnostic Tests**
7. Test PS3305 using the Tray/Bin Manual sensor test to verify that the sensor are functioning correctly.
8. Touch **Component Test**.
9. Run the Tray 5 pickup/feed motor drive test to verify that the feed motor is functioning correctly. If it is not, replace the tray pickup assembly.
10. If the error persists, replace the tray pickup assembly.

13.A5.FF

Description

Residual Media Jam in Tray 5

This jam occurs when residual media is detected at the Tray 5 feed sensor (PS3305) at power on.

Recommended action

1. Open Tray 5, remove any jammed paper, and then close the tray.
2. Open and close the HCI right door to allow the product to attempt to clear the jam.
3. Make sure that the Tray 5 pickup, feed, and separation roller are installed correctly and show no damage or wear.
4. Clean or replace the pickup/feed rollers as needed.
5. Check the connectors at the sensor, feed motor, and the HCI controller PCA.
6. Open the following menus:

- Administration
- Troubleshooting
- Diagnostic Tests

7. Test PS3305 using the Tray/Bin Manual sensor test to verify that the sensors are functioning correctly.
8. Touch **Component Test**.
9. Run the Tray 5 pickup/feed motor drive test to verify that the feed motor is functioning correctly. If it is not, replace the tray pickup assembly.
10. If the error persists, replace the tray pickup assembly.

13.A7.D4

Description

Jam in lower Right Door (From Jam Tray 4)

This jam occurs when the media does not reach the HCI Exit sensor (PS3301) in the designated amount of time after the Tray 4 feed sensor (PS3302) sensed the leading edge of the paper when printing from Tray 4.

Recommended action

1. Clear the jam in the indicated area.
2. Close the door to allow the product to attempt to clear the jam.
3. Make sure that the Tray 4 pickup, feed, and separation roller are installed correctly and show no damage or wear.
4. Clean or replace the pickup/feed rollers as needed.
5. Check the connectors at the sensor, feed motor, and the HCI controller PCA.
6. Open the following menus:
   - Administration
   - Troubleshooting
   - Diagnostic Tests
7. Test PS3301 using the Tray/Bin Manual sensor test to verify that the sensor are functioning correctly.
8. Touch **Component Test**.
9. Run the Tray 4 pickup/feed motor drive test to verify that the feed motor is functioning correctly. If it is not, replace the pickup drive assembly.
10. If the error persists, replace the tray pickup assembly.

13.A7.D5

Description

Jam in lower Right Door (From Jam Tray 5)

This jam occurs when the media does not reach the HCI Exit sensor (PS3301) in the designated amount of time after the Tray 5 feed sensor (PS3305) sensed the leading edge of the paper when printing from Tray 5.

Recommended action

1. Clear the jam in the indicated area.
2. Close the door to allow the product to attempt to clear the jam.
3. Make sure that the Tray 5 pickup, feed, and separation roller are installed correctly and show no damage or wear.
4. Clean or replace the pickup/feed rollers as needed.
5. Check the connectors at the sensor, feed motor, and the HCI controller PCA.
6. Open the following menus:
   - **Administration**
   - **Troubleshooting**
   - **Diagnostic Tests**
7. Test PS3301 using the Tray/Bin Manual sensor test to verify that the sensor are functioning correctly.
8. Touch **Component Test**.
9. Run the Tray 5 pickup/feed motor drive test to verify that the feed motor is functioning correctly. If it is not, replace the pickup drive assembly.
10. If the error persists, replace the tray pickup assembly.

13.A7.FF

Description

Residual Media Jam in High Capacity Input (HCI)

This jam occurs when residual media is detected at the HCI exit sensor (PS3301) at power on.

Recommended action

1. Clear the jam in the indicated area.
2. Close the door to allow the product to attempt to clear the jam.
3. Make sure that the Tray 4 and Tray 5 pickup, feed, and separation rollers are installed correctly and show no damage or wear.
4. Clean or replace the pickup/feed rollers as needed.
5. Check the connectors at the sensor, feed motor, and the HCI controller PCA.

6. Open the following menus:
   - **Administration**
   - **Troubleshooting**
   - **Diagnostic Tests**
7. Run a Paper Path Test from both Tray 4 and Tray 5 to validate the issue.
8. Test PS3301 using the Tray/Bin Manual sensor test to verify that the sensors are functioning correctly.
9. Touch **Component Test**.
10. Run the Tray 4 and Tray 5 pickup/feed motor drive test to verify that the feed motor is functioning correctly. If it is not, replace the pickup drive assembly.
11. Run the intermediate feed motor drive test to verify that the feed motor is functioning correctly. If it is not, replace the Merge Drive Assembly and/or Merge Assembly.

13.A8.D2

Description

Jam in Upper Right Door

This jam occurs when the media does not reach the Tray 2C feed sensor (PS8) in the designated amount of time after the Tray 2B feed sensor (PS1401) sensed the leading edge of the paper when printing from Tray 2.

Recommended action

1. Clear the jam in the indicated area.
2. Close the door to allow the product to attempt to clear the jam.
3. Make sure that the Tray 2 pickup, feed, and separation roller are installed correctly and show no damage or wear.
4. Clean or replace the pickup/feed rollers as needed.
5. Check the connectors at the sensor, feed motor, and the DC controller PCA.
6. Open the following menus:
   - **Administration**
   - **Troubleshooting**
   - **Diagnostic Tests**
7. Test PS1402 using the Tray/Bin Manual sensor test to verify that the sensor is functioning correctly.
8. Touch **Component Test**.
9. Run the Tray 2 pickup/feed motor drive test to verify that the feed motor is functioning correctly. If it is not, replace the pickup assembly.

10. Run the Tray 2 intermediate feed motor (M3) drive test to verify that the feed motor is functioning correctly. If it is not, replace the pickup assembly.

11. If the error persists, replace the paper pickup assembly.

13.A8.D3

Description

Jam in Upper Right Door

This jam occurs when the media does not reach the Tray 2C feed sensor (PS8) in the designated amount of time after the Tray 3B feed sensor (PS1403) sensed the leading edge of the paper when printing from Tray 3.

Recommended action

1. Clear the jam in the indicated area.
2. Close the door to allow the product to attempt to clear the jam.
3. Make sure that the Tray 3 pickup, feed, and separation roller are installed correctly and show no damage or wear.
4. Clean or replace the pickup/feed rollers as needed.
5. Check the connectors at the sensor, feed motor, and the DC controller PCA.
6. Open the following menus:
   - **Administration**
   - **Troubleshooting**
   - **Diagnostic Tests**
7. Test PS1402 using the Tray/Bin Manual sensor test to verify that the sensor is functioning correctly.
8. Touch **Component Test**.
9. Run the Tray 3 pickup/feed motor drive test to verify that the feed motor is functioning correctly. If it is not, replace the pickup assembly.
10. Run the Tray 3 intermediate feed motor (M2) drive test to verify that the feed motor is functioning correctly. If it is not, replace the pickup assembly.
11. If the error persists, replace the paper pickup assembly.

13.A8.D4 or 13.A8.D4

Description

Jam in Upper Right Door

This jam occurs when the media does not reach the Tray 2C feed sensor (PS8) in the designated amount of time after the HCI Exit sensor (PS3301) sensed the leading edge of the paper when printing from Tray 4 or Tray 5.

- D4 = Tray 4
- D5 = Tray 5

Recommended action

1. Clear the jam in the indicated area.
2. Close the door to allow the product to attempt to clear the jam.
3. Open the following menus:
   - Administration
   - Troubleshooting
   - Diagnostic Tests
4. Run a Paper Path Test from both Tray 4 and Tray 5 to validate the issue.
5. Test PS3301 using the Tray/Bin Manual sensor test to verify that the sensors are functioning correctly.
6. Touch **Component Test**.
7. Run the intermediate feed motor drive test to verify that the feed motor is functioning correctly. If it is not, replace the pickup drive assembly.
8. Run the intermediate feed motor drive test to verify that the feed motor is functioning correctly. If it is not, replace the Merge Drive Assembly and/or Merge Assembly.

13.AA.EE

Description

HCI Door Open Jam

This jam occurs when the HCI right door (SW3301) is opened during printing.

Recommended action

1. Close the Lower Right door to allow the product to attempt to clear the jam.
2. Open the following menus:
   - Administration
   - Troubleshooting
   - Diagnostic Tests
3. Test SW3301 using the Manual Sensor Switch test to verify that the switch is functioning correctly.
4. If the error persists, replace the Merge Assembly.

13.AB.EE

Description

HCI Door Open Jam

This jam occurs when the HCI inner flap door (PS3306) is opened during printing.

Recommended action

1. Close the inner flap door to allow the product to attempt to clear the jam.
2. Open the following menus:
   - **Administration**
   - **Troubleshooting**
   - **Diagnostic Tests**
3. Test PS3306 using the Manual Sensor test to verify that the sensor is functioning correctly.
4. If the error persists, replace the left tray pickup assembly.

13.B2.Az

Description

Media stay jam at registration sensor PS4.

- **13.B2.A1**

  This jam occurs when the media is present longer than "the expected media length plus 50mm" or more is detected at the Registration sensor (PS4) when printing from the Tray 1.

- **13.B2.A2**

  This jam occurs when the media is present longer than" the expected media length plus 50mm" or more is detected at the Registration sensor (PS4) when printing from the Tray 2.

- **13.B2.A3**

  This jam occurs when the media is present longer than "the expected media length plus 50mm" or more is detected at the Registration sensor (PS4) when printing from the Tray 3.

- **13.B2.A4**

  This jam occurs when the media is present longer than "the expected media length plus 50mm" or more is detected at the Registration sensor (PS4) when printing from the Tray 4.

- **13.B2.A5**

  This jam occurs when the media is present longer than "the expected media length plus 50mm" or more is detected at the Registration sensor (PS4) when printing from the Tray 5.

- **13.B2.AD**

  This jam occurs when the media is present longer than "the expected media length plus 50mm" or more is detected at the Registration sensor (PS4) when printing from the Duplexer.

Recommended action

1. Open the front door and clear the jam in the indicated area.
2. Close the door to allow the product to attempt to clear the jam.

3. Make sure that the transfer roller is seated correctly and not worn or deformed. Replace the roller if necessary.
4. Check the registration assembly for proper operation. Replace the registration assembly as needed.
5. If media is stopped under the toner cartridge, but has moved most of the way through registration, try another toner cartridge. If necessary, replace the toner cartridge.
6. Open the following menus:
   - Administration
   - Troubleshooting
   - Diagnostic Tests
7. Test the TOP sensor (PS4) using the Tray/Bin manual sensor test to verify that the sensor is functioning correctly. If it is not, replace the registration sensor assembly.

13.B2.Dz

Description

Media delay jam at registration sensor PS4.

- 13.B2.D1

  This jam occurs when the media does not reach the Registration sensor (PS4) in the designated amount of time after the Tray 1 feed sensor (PS2502) sensed the leading edge when printing from Tray 1.

- 13.B2.D2

  This jam occurs when the media does not reach the Registration sensor (PS4) in the designated amount of time after the Tray 2C feed sensor (PS8) sensed the leading edge when printing from Tray 2.

- 13.B2.D3

  This jam occurs when the media does not reach the Registration sensor (PS4) in the designated amount of time after the Tray 2C feed sensor (PS8) sensed the leading edge when printing from Tray 3.

- 13.B2.D4

  This jam occurs when the media does not reach the Registration sensor (PS4) in the designated amount of time after the Tray 2C feed sensor (PS8) sensed the leading edge when printing from Tray 4.

- 13.B2.D5

  This jam occurs when the media does not reach the Registration sensor (PS4) in the designated amount of time after the Tray 2C feed sensor (PS8) sensed the leading edge when printing from Tray 5.

- 13.B2.DD

  This jam occurs when the media does not reach the Registration sensor (PS4) in the designated amount of time after leaving the Duplex Wait Point when duplexing.

Recommended action

1. Open the front and right doors and clear the jam in the indicated area. Inspect the paper path and make sure that no paper is blocking the paper path.
2. Check the registration assembly for proper orientation. Replace the registration assembly as needed.
3. Open the following menus:
   - **Administration**
   - **Troubleshooting**
   - **Diagnostic Tests**
4. Test the TOP sensor (PS4) using the Tray/Bin manual sensor test to verify that the sensor is functioning correctly. If it is not, replace the registration sensor assembly.
5. Touch **Component Test**.
6. Run the Tray 2 intermediate feed motor (M3) drive test to verify that the feed motor is functioning correctly. If it is not, replace the pickup assembly.
7. If the error only occurs when duplexing, check the duplexer for blockage or damage and replace as needed.

13.B2.FF

Description

Residual Media Jam in Registration Area

This jam occurs when residual media is detected at the Registration sensor (PS4) or any of the three width sensors (PS1, PS2, PS3) at power on.

Recommended action

1. Open the front door and clear the jam in the indicated area.
2. Close the door to allow the product to attempt to clear the jam.
3. If media is stopped under the toner cartridge, but has moved most of the way through registration, try another toner cartridge. If necessary, replace the toner cartridge.
4. Make sure that the transfer roller is seated correctly and not worn or deformed. Replace the roller if necessary.
5. Check the registration assembly for proper operation. Replace the registration assembly as needed.
6. Open the following menus:

- Administration
- Troubleshooting
- Diagnostic Tests

7. Test the TOP sensor (PS4) and width sensors (PS1, PS2, PS3) using the Tray/Bin manual sensor test to verify that the sensor is functioning correctly. If it is not, replace the registration sensor assembly.

13.B4.FF

Description

Residual Media jam Loop sensor (PS9)

This jam occurs when residual media is detected at the Loop sensor (PS9) at power on.

Recommended action

1. Open the front door and clear the jam in the indicated area.
2. Close the door to allow the product to attempt to clear the jam.
3. If the issue persists as another specific Paper Jam, troubleshoot the specified Jam location.
4. Open the following menus:
   - Administration
   - Troubleshooting
   - Diagnostic Tests
5. Test the Loop sensor (PS9) using the Tray/Bin manual sensor test to verify that the sensor is functioning correctly. If it is not, replace the assembly containing Loop Sensor PS9.

13.B9.Az

Description

Fuser delivery stay

This jam occurs when the media stays at the fuser output sensor (PS502) for a designated amount of time after it has reached the fuser output sensor (PS502).

- 13.B9.A2

  The fuser is printing in fuser mode **Normal**.

- 13.B9.A3

  The fuser is printing in fuser mode **Light 1** or **Light 2** (see the event log secondary jam information digits for specific mode).

- 13.B9.A4

  The fuser is printing in fuser mode **Heavy 1**.

- 13.B9.A5

The fuser is printing in fuser mode **Heavy 2**.

- **13.B9.AB**

  The fuser is printing in fuser mode **Transparency**.

- **13.B9.AD**

  The fuser is printing in fuser mode **Envelope 1** or **Envelope 2** (see the event log secondary jam information digits for specific mode).

Recommended action

1. Open the left door and clear the jam in the indicated area.
2. Close the door to allow the product to attempt to clear the jam.
3. If the issue persists, remove the fuser and inspect the fuser sleeve, pressure roller, and delivery roller for blockage and/or damage. Replace the fuser as needed.

   CAUTION: The fuser might be **HOT**.

4. Open the following menus:
   - **Administration**
   - **Troubleshooting**
   - **Diagnostic Tests**
5. Test the Fuser Delivery sensor (PS502) using the Tray/Bin manual sensor test to verify the sensor is functioning correctly. If it is not, replace the fuser.
6. Touch **Component Test**.
7. Run the Fuser motor DCM1 drive test to verify that the Fuser Drive and Gears are functioning correctly. If they are not, replace the Fuser Drive Assembly.
8. Inspect the Left Door Diverter Assembly. Test the Diverter solenoids SL1 and SL2001 to verify that the diverter is functioning correctly. If it is not, replace the assembly.
9. Test and check the intermediate delivery roller. Replace the face down delivery assembly as needed.

13.B9.Bz

Description

Jam in Left Door

This jam occurs when a near complete overlap (less than 5 to 15 mm of non-overlap) multi-feed jam is detected.

A multi-feed jam 13.B9.Bz can be related to the following codes:

- 41.03.Az size misprint
- 50.9x.yz fuser error

- 13.B2.Az jam
- bad media in source tray
- **13.B9.B1**

  Multi-Feed jam is detected when printing from Tray 1.
- **13.B9.B2**

  Multi-Feed jam is detected when printing from Tray 2.
- **13.B9.B3**

  Multi-Feed jam is detected when printing from Tray 3.
- **13.B9.B4**

  Multi-Feed jam is detected when printing from Tray 4.
- **13.B9.B5**

  Multi-Feed jam is detected when printing from Tray 5.
- **13.B9.BD**

  Multi-Feed jam is detected when printing from the Duplexer.

Recommended action

1. Open the left door and clear the jam in the indicated area.
2. Close the door to allow the product to attempt to clear the jam.
3. Make sure the media meets HP specifications and is loaded in the trays correctly.
4. Make sure that the pickup, feed, and separation roller for the specified tray are installed correctly and show no damage or wear.
5. Clean or replace the pickup/feed rollers as needed.

13.B9.Cz

Description

Fuser Wrap Jam

This jam occurs when the media disappears from the fuser output sensor (PS502) before a designated amount of time after the media reached the fuser output sensor (PS502).

(It is determined that the media is being wrapped around the fuser roller)

Z = Fuser mode

- **13.B9.C1 (event code)**

  Fuser wrap jam when **Auto Sense (Normal)**.
- **13.B9.C2 (event code)**

  Fuser wrap jam when **Normal**.

- **13.B9.C3 (event code)**

  Fuser wrap jam when **Light 1** or **Light 2** (see event log secondary jam information for specific code).

- **13.B9.C4 (event code)**

  Fuser wrap jam when **Heavy 1**.

- **13.B9.C5 (event code)**

  Fuser wrap jam when **Heavy 2**.

- **13.B9.C6 (event code)**

  Fuser wrap jam when **Heavy media 3**.

- **13.B9.C7 (event code)**

  Fuser wrap jam when **Glossy media 1**.

- **13.B9.C8 (event code)**

  Fuser wrap jam when **Glossy media 2**.

- **13.B9.C9 (event code)**

  Fuser wrap jam when **Glossy media 3**.

- **13.B9.CB (event code)**

  Fuser wrap jam when **Transparency**.

- **13.B9.CC (event code)**

  Fuser wrap jam when **Label**.

- **13.B9.CD (event code)**

  Fuser wrap jam when **Envelope 1** or **Envelope 2** (see event log secondary jam information for specific code).

Recommended action

1. Open the left door.
2. Remove the fuser, and then remove any paper wrapped around the fuser roller.

   CAUTION: The fuser might be **HOT**.

3. Reinstall the fuser, and then close the door.
4. Print a cleaning page to make sure that all of the toner is removed from the fuser roller.
5. Use the manual sensor tests to toggle the fuser output sensor (PS502). If the sensor is not functioning correctly, replace the fuser assembly.
6. If the error persists, the fuser roller or pressure roller might be damaged. Replace the fuser.

13.B9.Dz

Description

Fuser delivery delay jam

This jam occurs when the media disappears from the fuser output sensor (PS502) before a designated amount of time after the registration sensor (PS4) sensed the leading edge when printing.

- **13.B9.D1**

  Fuser delivery delay jam when printing from Tray 1.

- **13.B9.D2**

  Fuser delivery delay jam when printing from Tray 2.

- **13.B9.D3**

  Fuser delivery delay jam when printing from Tray 3.

- **13.B9.D4**

  Fuser delivery delay jam when printing from Tray 4.

- **13.B9.D5**

  Fuser delivery delay jam when printing from Tray 5.

- **13.B9.DD**

  Fuser delivery delay jam when printing with the Duplexer.

Recommended action

If the media stopped **before the fuser**, try the following steps.

1. Open the front door and the left door and clear the jam in the indicated area.
2. Close the door to allow the product to attempt to clear the jam.
3. If media is stopped under the toner cartridge, try another toner cartridge. If necessary, replace the toner cartridge.
4. Make sure that the transfer roller is seated correctly and not worn or deformed. Replace the roller if necessary.
5. Inspect the transfer feed assembly for debris or damage. If necessary, replace the transfer feed assembly.

If the media stopped **in or at the fuser**, try the following steps.

1. Open the front door and the left door and clear the jam in the indicated area.
2. Close the door to allow the product to attempt to clear the jam.
3. Remove the fuser and inspect the fuser sleeve, pressure roller, and delivery roller for blockage and/or damage. Replace the fuser as needed.

   CAUTION: The fuser might be **HOT**.

4. Open the following menus:
   - **Administration**
   - **Troubleshooting**
   - **Diagnostic Tests**
5. Test the Fuser Delivery sensor (PS502) using the Tray/Bin manual sensor test to verify the sensor is functioning correctly. If it is not, replace the fuser.
6. Touch **Component Test**.
7. Run the Fuser motor DCM1 drive test to verify that the Fuser Drive and Gears are functioning correctly. If they are not, replace the Fuser Drive Assembly.

13.B9.FF

Description

Residual Media jam Fuser Output Sensor

This jam occurs when residual media is detected at the Fuser Output sensor (PS502) at power on.

Recommended action

1. Open the left door and clear the jam in the indicated area.
2. Close the door to allow the product to attempt to clear the jam.
3. Remove the fuser and inspect the fuser sleeve, pressure roller, and delivery roller for blockage and/or damage. Replace the fuser as needed.

   CAUTION: The fuser might be **HOT**.

4. Open the following menus:
   - **Administration**
   - **Troubleshooting**
   - **Diagnostic Tests**
5. Test the Fuser Delivery sensor (PS502) using the Tray/Bin manual sensor test to verify the sensor is functioning correctly. If it is not, replace the fuser.
6. Run the Fuser motor DCM1 drive test to verify that the Fuser Drive and Gears are functioning correctly. If they are not, replace the Fuser Drive Assembly.

13.BA.EE

Description

This jam occurs when the engine front door (SW8) is opened during printing.

Recommended action

1. Close the front door.
2. Check the projection tabs of the front door that engage the door sensor (SW8). If damaged, replace the appropriate part.
3. Use the Manual sensor test to activate the door switch. Replace the switch if it is not functioning correctly.
4. Check connector J302 on the DC controller PCA and connector J3 on SW8.

13.BB.EE

Description

This jam occurs when the engine right door (SW7) is opened during printing.

Recommended action

1. Close the right door.
2. Check the projection tabs of the right door that engage the door sensor (SW7). If damaged, replace the appropriate part.
3. Use the Manual sensor test to activate the door switch. Replace the switch if it is not functioning correctly.
4. Check connector J302 on the DC controller PCA and connector J3 on SW7.

13.D1.Az

Description

Jam in Left Door

This jam occurs when the media stays at the duplex switchback sensor (PS2002) for a designated amount of time after it has reached the duplex switchback sensor (PS2002).

Z = Fuser Mode

- **13.D1.A2**

  The fuser is printing in fuser mode **Normal**.

- **13.D1.A3**

  The fuser is printing in fuser mode **Light 1** or **Light 2** (see the event log secondary jam information digits for specific mode).

- **13.D1.A4**

  The fuser is printing in fuser mode **Heavy 1**.

- **13.D1.A5**

  The fuser is printing in fuser mode **Heavy 2**.

- **13.D1.A6**

  The fuser is printing in fuser mode **Heavy media 3**.

- 13.D1.A7

  The fuser is printing in fuser mode **Glossy media 1**.

- 13.D1.A8

  The fuser is printing in fuser mode **Glossy media 2**.

- 13.D1.A9

  The fuser is printing in fuser mode **Glossy media 3**.

- 13.D1.AB

  The fuser is printing in fuser mode **Transparency**.

- 13.D1.AC

  The fuser is printing in fuser mode **Label**.

Recommended action

1. Open the left door and clear the jam in the indicated area.
2. Close the door to allow the product to attempt to clear the jam.
3. If the issue persists, remove the fuser and inspect the fuser sleeve, pressure roller, and delivery roller for blockage and/or damage. Replace the fuser as needed.

   CAUTION: The fuser might be **HOT**.

4. Open the following menus:
   - **Administration**
   - **Troubleshooting**
   - **Diagnostic Tests**
5. Test the Fuser Delivery sensor (PS502) using the Tray/Bin manual sensor test to verify the sensor is functioning correctly. If it is not, replace the fuser.
6. Touch **Component Test**.
7. Run the Fuser motor DCM1 drive test to verify that the Fuser Drive and Gears are functioning correctly. If they are not, replace the Fuser Drive Assembly.
8. Inspect the Left Door Diverter Assembly. Test the Diverter solenoids SL1 and SL2001 to verify that the diverter is functioning correctly. If it is not, replace the assembly.
9. Test and check the intermediate delivery roller. Replace the face down delivery assembly as needed.

13.D1.Dz

Description

Jam in Left Door

This jam occurs when the media does not reach the duplex switchback sensor (PS2002) for a designated amount of time after the fuser output sensor (PS502) sensed the leading edge.

Z = Fuser Mode

- **13.D1.D2**

  The fuser is printing in fuser mode **Normal**.

- **13.D1.D3**

  The fuser is printing in fuser mode **Light 1** or **Light 2** (see the event log secondary jam information digits for specific mode).

- **13.D1.D4**

  The fuser is printing in fuser mode **Heavy 1**.

- **13.D1.D5**

  The fuser is printing in fuser mode **Heavy 2**.

- **13.D1.D8**

  The fuser is printing in fuser mode **Transparency**.

- **13.D1.DD**

  The fuser is printing in fuser mode **Envelope 1** or **Envelope 2** (see the event log secondary jam information digits for specific mode).

Recommended action

1. Open the left door and clear the jam in the indicated area.
2. Close the door to allow the product to attempt to clear the jam.
3. Test the print job or the duplex paper path test again.
4. Open the following menus:
   - **Administration**
   - **Troubleshooting**
   - **Diagnostic Tests**
5. Touch **Component Test**.
6. Inspect the Left Door Diverter Assembly. Test the Diverter solenoids SL2001 to verify that the diverter is functioning correctly. If it is not, replace the assembly.
7. Manually toggle the white activation rod in the diverter.
8. Verify where the media stops on error.
   - Diverter assembly
   - Input of duplexer
9. If media is stopped inside the diverter and the leading edge has **not** exited the diverter assembly, replace the diverter assembly.
10. If media is stopped entering the duplexer with part of the page still present in the diverter, but the leading edge in the duplexer, replace the duplexer.

13.D1.FF

Description

Jam in Left Door

This jam occurs when residual media is detected at the duplex switchback sensor (PS2002) or the duplex pre-registration sensor (PS2003) at power on.

Recommended action

1. Open the left door and clear the jam in the indicated area.
2. Close the door to allow the product to attempt to clear the jam.
3. Replace the duplexer.

13.D2.Az

Description

Jam in Left Door

This jam occurs when the media stays at the duplex delivery sensor (PS2004) for a designated amount of time after it has reached the duplex delivery sensor (PS2004).

- **13.D2.A2**

  The fuser is printing in fuser mode **Normal**.

- **13.D2.A3**

  The fuser is printing in fuser mode **Light 1** or **Light 2** (see the event log secondary jam information digits for specific mode).

- **13.D2.A4**

  The fuser is printing in fuser mode **Heavy 1**.

- **13.D2.A5**

  The fuser is printing in fuser mode **Heavy 2**.

- **13.D2.AB**

  The fuser is printing in fuser mode **Transparency**.

- **13.D2.AD**

  The fuser is printing in fuser mode **Envelope 1** or **Envelope 2** (see the event log secondary jam information digits for specific mode).

Recommended action

1. Open the left door and clear the jam in the indicated area.
2. Close the door to allow the product to attempt to clear the jam.
3. Remove and inspect the duplexer unit. Clear and clean the duplexer as needed.
4. If the issue persists, replace the duplexer.

13.D2.Dz

Description

Jam in Left Door

This jam occurs when the media does not reach the duplex delivery sensor (PS2004) in a designated amount of time after the duplex pre-registration sensor (PS2003) sensed the leading edge.

- **13.D2.D2**

  The fuser is printing in fuser mode **Normal**.

- **13.D2.D3**

  The fuser is printing in fuser mode **Light 1** or **Light 2** (see the event log secondary jam information digits for specific mode).

- **13.D2.D4**

  The fuser is printing in fuser mode **Heavy 1**.

- **13.D2.D5**

  The fuser is printing in fuser mode **Heavy 2**.

- **13.D2.DB**

  The fuser is printing in fuser mode **Transparency**.

- **13.D2.DD**

  The fuser is printing in fuser mode **Envelope 1** or **Envelope 2** (see the event log secondary jam information digits for specific mode).

Recommended action

1. Open the left door and clear the jam in the indicated area.
2. Close the door to allow the product to attempt to clear the jam.
3. Remove and inspect the duplexer unit. Clear and clean the duplexer as needed.
4. If the issue persists, replace the duplexer.

13.D2.FF

Description

Jam in Left Door

This jam occurs when residual media is detected at the duplex delivery sensor (PS2004) or the duplex residual sensor (PS2005) at power on.

Recommended action

1. Open the left door and clear the jam in the indicated area.
2. Close the door to allow the product to attempt to clear the jam.

3. Remove and inspect the duplexer unit. Clear and clean the duplexer as needed.
4. If the issue persists, replace the duplexer.

13.D4.Az

Description

Jam in Left Door

This jam occurs when the media stays at the duplex pre-registration sensor (PS2003) for a designated amount of time after it has reached the duplex pre-registration sensor (PS2003).

- **13.D4.A2**

  The fuser is printing in fuser mode **Normal**.

- **13.D4.A3**

  The fuser is printing in fuser mode **Light 1** or **Light 2** (see the event log secondary jam information digits for specific mode).

- **13.D4.A4**

  The fuser is printing in fuser mode **Heavy 1**.

- **13.D4.A5**

  The fuser is printing in fuser mode **Heavy 2**.

- **13.D4.AB**

  The fuser is printing in fuser mode **Transparency**.

- **13.D4.AD**

  The fuser is printing in fuser mode **Envelope 1** or **Envelope 2** (see the event log secondary jam information digits for specific mode).

Recommended action

1. Open the left door and clear the jam in the indicated area.
2. Close the door to allow the product to attempt to clear the jam.
3. Remove and inspect the duplexer unit. Clear and clean the duplexer as needed.
4. If the issue persists, replace the duplexer.

13.D4.Dz

Description

Jam in Left Door

This jam occurs when the media does not reach the duplex pre-registration sensor (PS2003) in a designated amount of time after the duplex switchback sensor (PS2002) sensed the leading edge.

- **13.D4.D2**

The fuser is printing in fuser mode **Normal**.

- **13.D4.D3**

  The fuser is printing in fuser mode **Light 1** or **Light 2** (see the event log secondary jam information digits for specific mode).

- **13.D4.D4**

  The fuser is printing in fuser mode **Heavy 1**.

- **13.D4.D5**

  The fuser is printing in fuser mode **Heavy 2**.

- **13.D4.DB**

  The fuser is printing in fuser mode **Transparency**.

- **13.D4.DD**

  The fuser is printing in fuser mode **Envelope 1** or **Envelope 2** (see the event log secondary jam information digits for specific mode).

Recommended action

1. Open the left door and clear the jam in the indicated area.
2. Close the door to allow the product to attempt to clear the jam.
3. Remove and inspect the duplexer unit. Clear and clean the duplexer as needed.
4. If the issue persists, replace the duplexer.

13.E1.Dz

Description

Jam in Left Door

This jam occurs when the media does not reach the face down bin full sensor (PS1452) in a designated amount of time after the face down output sensor (PS1451) sensed the leading edge.

- **13.E1.D2**

  The fuser is printing in fuser mode **Normal**.

- **13.E1.D3**

  The fuser is printing in fuser mode **Light 1** or **Light 2** (see the event log secondary jam information digits for specific mode).

- **13.E1.D4**

  The fuser is printing in fuser mode **Heavy 1**.

- **13.E1.D5**

  The fuser is printing in fuser mode **Heavy 2**.

- **13.E1.DB**

The fuser is printing in fuser mode **Transparency**.

- **13.E1.DD**

  The fuser is printing in fuser mode **Envelope 1** or **Envelope 2** (see the event log secondary jam information digits for specific mode).

Recommended action

1. Open the left door and clear the jam in the indicated area.
2. Close the door to allow the product to attempt to clear the jam.
3. Reseat the connections to the DC controller.
4. Make sure that the delivery flags move smoothly.
5. Open the following menus:
   - **Administration**
   - **Troubleshooting**
   - **Diagnostic Tests**
6. Test the face down bin full sensor (PS1452) using the Tray/Bin manual sensor test to verify the sensor is functioning correctly. If it is not, replace the delivery sensor assembly.
7. Touch **Component Test**.
8. Inspect the Left Door Diverter Assembly. Test the Diverter solenoids SL1 and SL2001 to verify that the diverter is functioning correctly.
9. Manually toggle the white activation rod in the diverter. Replace the diverter if necessary.
10. If the issue persists, replace the delivery unit.

13.E1.FF

Description

Residual Jam - Jam in Left Door

This jam occurs when residual media is detected at the face down bin full sensor (PS1452) at power on.

Recommended action

1. Open the left door and clear the jam in the indicated area.
2. Close the door to allow the product to attempt to clear the jam.
3. Reseat the connections to the DC controller.
4. Make sure that the delivery flags move smoothly.
5. Open the following menus:

- Administration
- Troubleshooting
- Diagnostic Tests

6. Test the face down bin full sensor (PS1452) using the Tray/Bin manual sensor test to verify the sensor is functioning correctly. If it is not, replace the delivery sensor assembly.
7. If the issue persists, replace the delivery unit.

13.E6.Az

Description

Jam in Left Door

This jam occurs when the media stays at the face down output sensor (PS1451) for a designated amount of time after it has reached the face down output sensor (PS1451).

- 13.E6.A2

  The fuser is printing in fuser mode **Normal**.

- 13.E6.A3

  The fuser is printing in fuser mode **Light 1** or **Light 2** (see the event log secondary jam information digits for specific mode).

- 13.E6.A4

  The fuser is printing in fuser mode **Heavy 1**.

- 13.E6.A5

  The fuser is printing in fuser mode **Heavy 2**.

- 13.E6.AB

  The fuser is printing in fuser mode **Transparency**.

- 13.E6.AD

  The fuser is printing in fuser mode **Envelope 1** or **Envelope 2** (see the event log secondary jam information digits for specific mode).

Recommended action

1. Open the left door and clear the jam in the indicated area.
2. Close the door to allow the product to attempt to clear the jam.
3. Reseat the connections to the DC controller.
4. Make sure that the delivery flags move smoothly.
5. Open the following menus:

- Administration
- Troubleshooting
- Diagnostic Tests

6. Test the face down bin full sensor (PS1452) using the Tray/Bin manual sensor test to verify the sensor is functioning correctly.
7. If necessary, replace the delivery unit.

13.E6.Dz

Description

Jam in Left Door

This jam occurs when the media does not reach the face down output sensor (PS1451) in a designated amount of time after the fuser output sensor (PS502) sensed the leading edge.

- 13.E6.D2

  The fuser is printing in fuser mode **Normal**.

- 13.E6.D3

  The fuser is printing in fuser mode **Light 1** or **Light 2** (see the event log secondary jam information digits for specific mode).

- 13.E6.D4

  The fuser is printing in fuser mode **Heavy 1**.

- 13.E6.D5

  The fuser is printing in fuser mode **Heavy 2**.

- 13.E6.DB

  The fuser is printing in fuser mode **Transparency**.

- 13.E6.DD

  The fuser is printing in fuser mode **Envelope 1** or **Envelope 2** (see the event log secondary jam information digits for specific mode).

Recommended action

1. Open the left door and clear the jam in the indicated area.
2. Close the door to allow the product to attempt to clear the jam.
3. Reseat the connections to the DC controller.
4. Make sure that the delivery flags move smoothly.
5. Open the following menus:

- Administration
- Troubleshooting
- Diagnostic Tests

6. Test the face down bin full sensor (PS1452) using the Tray/Bin manual sensor test to verify the sensor is functioning correctly.
7. Touch **Component Test**.
8. Inspect the Left Door Diverter Assembly. Test the Diverter solenoids SL1 and SL2001 to verify that the diverter is functioning correctly.
9. Manually toggle the white activation rod in the diverter. Replace the diverter if necessary.
10. If necessary, replace the delivery assembly.

13.E6.FF

Description

Jam in Left Door

This jam occurs when residual media is detected at the face down output sensor (PS1451) at power on.

This jam code will only be in the event log if it is a residual jam at power on.

Recommended action

1. Open the left door and clear the jam in the indicated area.
2. Close the door to allow the product to attempt to clear the jam.
3. Make sure that the delivery flags move smoothly.
4. Open the following menus:
   - Administration
   - Troubleshooting
   - Diagnostic Tests
5. Test the face down output sensor (PS1451) using the Tray/Bin manual sensor test to verify the sensor is functioning correctly.
6. If the issue persists, replace the delivery unit.

13.EA.EE

Description

Left Door Open Jam

This jam occurs when the engine left door (SW6) is opened during printing.

Recommended action

1. Close the lower right door to allow the product to attempt to clear the jam.
2. Open the following menus:
   - Administration
   - Troubleshooting
   - Diagnostic Tests
3. Test SW6 using the manual sensor switch test to verify the switch is functioning correctly.
4. If the issue persists, replace SW6.

13.FF.FF

Description

Jam in Printer

This jam occurs when residual media is detected at the multiple media path sensors.

This jam code will only be in the event log if it is a residual jam at power on.

Recommended action

1. Open all the doors and clear all media from the product.
2. Close all the doors to allow the product to attempt to clear the paper path.

30.XX.YZ Error Messages

30.01.01

Description

The flatbed cover sensor was interrupted.

Recommended action

No action necessary. This error message should automatically clear.

If the error persists, open the Scanner Tests to test the Flatbed cover sensor.

30.01.06

Description

Scanner fan error.

Recommended action

1. Turn the product off, and then on again.
2. During the MFP initialization sequence, listen to the fan to determine if it is operating.
3. If the error persists, turn the product off, and then check the fan wire-harness connectors.

4. If the fan is not operating, replace the fan.
5. If the error persists, replace the Scan Control Board (SCB).

NOTE: You might want to provide both parts the fan and the SCB to the onsite technician.

Have the technician verify that the connector on the scanner controller PCB is firmly seated. Also, make sure that the connection for the fan in the base of the scanner assembly is firmly seated.

30.01.08

Description

The scanner optic failed to return to the home position.

Recommended action

1. Turn the product off, and then on again.
2. Observe the movement of the optics assembly.
3. If the error persists, replace the optic assembly, the scanner motor, or the entire scanner assembly.

30.01.10 (event code) Scanner ADF fan error

Description

The ADF fan is not operating. This fan operates only during the ADF scan process.

Recommended action

1. Turn the product off, and then on again.
2. If the error persists, turn the product off and then check the fan wire-harness connectors.
3. Remove the ADF rear cover and watch the fan during a scan from the ADF.
4. If the fan does not rotate, replace the ADF assembly.

30.01.14

Description

Scanner control board (SCB) EEPROM error.

Recommended action

1. Turn the product off, and then on again.
2. Make sure that all connectors on the SCB are seated fully.
3. Make sure that the MFP has the latest SCB firmware version.
4. Replace the SCB.

30.01.15

Description

Scanner did not initialize (internal error).

The scanner failed to be initialized due to an internal error.

Recommended action

1. Turn the product off, and then on again.
2. Verify that all covers are installed correctly and that the ADF and ADF jam cover are closed.
3. Check all sensors on the scanner to ensure they are not blocked.
4. If the error persists, replace the scanner flatbed assembly.

30.01.18

Description

Scanner internal optical sensor error.

Recommended action

1. Turn the product off, and then on again.
2. Make sure that all the connectors on the SCB are seated fully.
3. Make sure that the MFP has the latest SCB firmware version.
4. replace the SCB.
5. If the error persists, replace the optics or the entire scanner unit.

30.01.19

Description

Scanner internal lamp sensor error.

Recommended action

1. Turn the product off, and then on again.
2. Test the lower lamp using the Scanner test located in the Diagnostics menu.
3. Replace the scanner lamp.

30.01.23 Scanner calibration failure

Description

The scanner calibration failed.

Recommended action

1. Turn the product off, and then on again.
2. After the product warms up, repeat the calibration process.
3. If the error persists, replace the scanner.

30.01.30 or 30.01.32

Description

HP image ASIC error.

Recommended action

Turn the product off, and then on again.

30.01.36

Description

Scanner firmware upgrade error.

Recommended action

1. Resend the scanner firmware upgrade.
2. If the error persists, replace the SCB.

30.01.41

Description

The formatter lost connections with the SCB or communication was corrupted.

Recommended action

1. Turn the product off, and then on.
2. Reseat the formatter.
3. Upgrade the firmware.
4. Verify that all cables are connected to the product and to the interconnect board/ formatter and SCB.
5. Verify that the SCB has power.
6. Replace the SCB.
7. Replace the formatter.
8. Replace the interconnect board.

30.01.42

Description

Internal product communication error.

Recommended action

1. Turn the product off, and then on again.
2. If the error persists, turn the product off, and then check the SCB connectors.
3. If the error persists, replace the SCB.

30.01.43

Description

Scan memory error.

Recommended action

1. Turn the product off, and then on again.
2. If the error persists, turn the product off, and then reseat the formatter.
3. If the error persists, replace the formatter.

30.01.44

Description

Internal product communication error.

Recommended action

1. Turn the product off, and then on again.
2. If the error persists, turn the product off, and then check the scanner cable.
3. Upgrade the firmware.
4. If the error persists, turn the product off, and then reseat the formatter.
5. If the error persists, replace the SCB or the formatter.

30.01.45

Description

Internal CPB communication error.

Recommended action

1. Turn the product off, and then on again.
2. If the error persists, turn the product off, and then reseat the formatter.
3. Upgrade the firmware.
4. If the error persists, replace the SCB.
5. If the error persists, replace the formatter.

30.01.46

Description

Internal CPB communication error.

Recommended action

1. Turn the product off, and then on again.
2. If the error persists, turn the product off, and then reseat the formatter.
3. If the error persists, replace the SCB.

30.01.47

Description

Document feeder error.

Recommended action

1. Turn the product off, and then on again.
2. If the error persists, turn the product off, and then check the document feeder wire-harness connectors.
3. If the error persists, replace the document feeder assembly.
4. If the error persists, replace the formatter.

30.01.48

Description

Scanner error.

Recommended action

1. Turn the product off, and then on again.
2. If the error persists, turn the product off, and then check the scanner wire-harness connectors and the scanner power supply fan.
3. If the error persists, replace the scanner power supply or the scanner power supply fan.

30.01.49

Description

Scanner inverter fan error.

Recommended action

1. Turn the product off, and then on again.
2. If the error persists, turn the product off, and then check the scanner wire-harness connectors and the scanner power supply fan.
3. If the error persists, replace the scanner power supply, the scanner power supply fan, or the SCB.

30.01.50

Description

Internal SCB error.

Recommended action

1. Turn the product off, and then on again.
2. If the error persists, replace the SCB.

30.03.14

Description

A non-fatal error has occurred.

A scanner EEPROM (NVM) error has occurred.

Recommended action

This is an informational message, and no action is required.

30.03.20

Description

The copy processor board firmware cannot communicate with the PCA on the optical assembly.

Recommended action

1. Turn the product off, and then on again.
2. Verify that the FFC cables between scanner and the SCB are connected.
3. Replace the scanner.

30.03.22

Description

The scan module cannot see the illumination module, or marginal illumination. The optical assembly is not parked under the calibration strip.

Recommended action

1. Turn the product off, and then on again.
2. Upgrade the firmware.
3. Check the service event log for other scanner errors, and then resolve those errors.
4. Check the scan module FFC connection.
5. Replace the scanner.
6. If the error persists, please escalate this problem to your Global Business unit.

30.03.23

Description

The calibration stitching label shifted or there are bad sensors in the scan module.

Recommended action

1. Turn the product off, and then on again.
2. Upgrade the firmware.
3. Replace the scanner.

30.03.30

Description

The SCB cannot communicate with the flatbed scanner motor.

Recommended action

1. Turn the product off, and then on again. As the product turns on, verify that the scan head moves.
2. Verify that the drive belt is in the correct position.
3. Check for a red LED illuminated on the scanner motor.
4. Check the cable connection to the SCB.
5. Replace the scanner.

30.03.45

Description

Scanner control board (SCB) firmware assertion failure. SCB firmware assert controls the scan head motor.

Recommended action

1. Turn the product off, and then on again.
2. Upgrade the firmware.
3. Replace the SCB.
4. Replace the scanner assembly.

31.01.02 Jam in document feeder

Description

‘Jam in document feeder’ occurs when a page is picked, but gets jammed somewhere inside the document feeder.

Recommended action

1. Check the ADF float to verify it is properly positioned (Figure 4).

a. Push on the float. If properly installed it should spring back. If it does not, verify the latch at the top is snapped into position.

b. Check the location of the small Mylar tabs. If the tabs are blocking the paper path, push gently on the tab to place it in the proper position behind the white foam reflector (Click here for more details).

2. If the **30.01.02** message cannot be cleared, a sensor might still be blocked by a piece of paper. There are two other sensors used to detect media jammed in the document feeder. Continue with the following troubleshooting.

Troubleshooting the internal jam sensors

There are two other sensors that need to be checked when a 31.01.02 is persistent.

The *feed* sensor is located in the paper path just before the ADF float.

The *exit* sensor is located just after the ADF float.

A business card can be used to “flush” the area around the sensors to determine if a scrap of paper or possibly a paper clip is causing a false jam indication. If either sensor is found defective, the ADF must be replaced.

a. Open the ADF top cover and insert a business card from above to clear the feed sensor.

b. Insert a business card from below to clear the exit sensor.

31.01.03 Document feeder pick error

Description

The document feeder pick (or mis-pick) error occurs when a page cannot be fed from the input tray.

Recommended action

1. Verify that the roller assembly and separation pad are installed correctly.

   a. Open the top cover of the ADF.

   b. Push down on the separation pad, and then release it. It should spring back up. If it does not, the spring might be missing.

   NOTE: The separation pad assembly is mounted to a spring loaded paper access guide, which also moves when pushed down.

   c. Close the ADF top cover while observing the roller assembly. It will fall against the separation pad, and then pop up when the ADF initializes.

2. Clean the separation pad and rollers. Use a soft, lint-free cloth moistened with water to clean the two rollers and the separation pad.

3. Print a Supplies Status page and verify the remaining life of the Document Feeder Kit. if the remaining life is less than 10%, explain to the customer that the rollers and separation pad are consumables and need to be replaced every 90K pages.

4. Check the stack height in the tray. If the stack height is greater than 7 mm (0.28 in), the originals might get jammed under the feed guides.

5. Verify that the feed guides are not pushed too tightly against the input stack.

6. Check the operation of the registration sensor flag.
   a. Open the top cover and locate the sensor flag.
   b. Push down on the flag, and then release it. It should spring back into position. If it does not spring back into position, replace the ADF.
   c. Close the top cover.
7. Check the input tray.

   If the clear plastic edge of the input tray is always illuminated with green light, even without paper in the tray, proceed with the following troubleshooting steps.

   Troubleshooting the internal jam sensors

   The green LED in the input tray is always on, even when no paper is present.

   This condition will cause the ADF to continue to pick, even after all the pages have left the input tray.

   a. Check the ADF ground wire connection at the rear of the scanner.
   b. If the ground wire is in contact with the CN10 connector test point of the SCB, loosen the screw and move the wire away from the CN10.

      If the ground wire contacts the CN10 connector test point of the SCB, the formatter will be damaged, resulting in a persistent (will not clear) 31.01.03 document feeder pick error.

   NOTE: The formatter will have to be replaced. The grounding of the test point results in damage to a component on the formatter, which results in a loss of 3.3v to the SCB.

31.XX.YZ Error Messages

31.03.30

Description

The document feeder pick motor is not turning.

Recommended action

1. Verify that the paper meets the product specifications.
2. Make sure that the input tray is not overloaded.
3. Check the event log for document feeder errors, and then resolve any errors first.
4. Open and close the top cover to see if the pick motor turns without posting this error. If the motor turns, then the motor is good.
5. Verify that the motor cables are connected.
6. Reseat the document feeder to the SCB.
7. Replace the document feeder.

31.03.31

Description

The document feeder pick motor is not turning.

Recommended action

1. Verify that the paper meets the product specifications.
2. Make sure that the input tray is not overloaded.
3. Check the event log for document feeder errors, and then resolve any errors first.
4. Verify that the motor cables are connected.
5. Reseat the document feeder to the SCB.
6. Replace the document feeder.

31.03.32

Description

The document feeder deskew motor is not turning.

Recommended action

1. Verify that the paper meets the product specifications.
2. Make sure that the input tray is not overloaded.
3. Check the event log for document feeder errors, and then resolve any errors first.
4. Verify that the motor cables are connected.
5. Reseat the ADF to SCB cables.
6. Replace the document feeder.

31.08.A1

Description

An initialization occurred after an abnormal product shutdown.

Recommended action

No action necessary.

31.08.A2

Description

A normal shutdown has occurred.

Recommended action

No action necessary.

31.08.A3

Description

A normal initialization has occurred.

Recommended action

No action necessary.

31.13.01

Description

Paper pick was initiated, but the page didn't did not make it to the pick success sensor.

Recommended action

1. Open the ADF lid, pull sheets back into input tray, and then resume the job.
2. Check the paper guides and make sure that they are set to the correct paper width.
3. Make sure that the input tray is not overloaded.
4. Check the document feeder page count for roller life.
5. Verify that the paper meets the product specifications.
6. Make sure that the ADF roller door is completely closed.
7. Check the event log for 31.03.30 errors, and and then resolve those errors first.
8. Clean the document feeder roller.
9. Open the following menus:
   - **Administration**
   - **Troubleshooting**
   - **Diagnostic Tests**
   - **Scanner Tests**
10. Actuate the Pick-Success Sensor. If the sensor does not show functionality when tested, replace the document feeder.

31.13.02

Description

The paper passed the pick success sensor, and then jammed in the document feeder paper path.

Recommended action

1. Clear the paper path and try feeding the page again.
2. Verify that the paper meets the product specifications.
3. Check the paper guides and make sure that they are set to the correct paper width.
4. Verify that the paper path is clear.

5. Check for motor stall 31.03.31 and 31.03.32 errors.
6. Open the following menus:
   - Administration
   - Troubleshooting
   - Diagnostic Tests
   - Scanner Tests
7. Actuate the Paper-Path Sensor 1. If the sensor does not show functionality when tested, replace the document feeder.

31.13.13

Description

The jam access door is open.

Recommended action

1. Verify that the jam access cover is closed.
2. Try feeding the paper again.
3. Verify that the flag is not broken off.
4. Open the following menus:
   - Administration
   - Troubleshooting
   - Diagnostic Tests
   - Scanner Tests
5. Actuate the ADF Jam Cover Sensor. If the sensor does not show functionality when tested, replace the document feeder.

31.13.14

Description

This is a feed jam in the document feeder, and the motor is not turning.

Recommended action

1. Verify that the paper meets the product specifications.
2. Make sure that the document feeder input tray is not overloaded.
3. Check the event log for document feeder errors, and then resolve any errors first.
4. Open and close the top cover to see if the pick motor turns without posting this error. If there is no error, then the motor is good.
5. Verify that the motor cables are connected.

6. Reseat the document feeder to the SCB.
7. Replace the document feeder.

31.13.15

Description

This is a duplex refeed jam in the document feeder. The paper jam occurs on the back-side copy. The duplex refeed does not make it to the deskew sensor.

Recommended action

1. Remove the jammed paper.
2. Verify that there is nothing in the paper path of the duplex refeed area.
3. Retry the copy job.
4. Replace the document feeder.

32.08.XX Error Messages

32.08.A1, 32.08.A2, 32.08.A3

Description

32.08.A1 (event code)

Shutdown event-boot after abnormal shutdown

32.08.A2 (event code)

Boot from normal shutdown event

32.08.A3 (event code)

Regular boot event

Recommended action

No action necessary.

32.1C.XX

Description

32.1C.05 (event code)

The restore job ticket was submitted with invalid credentials

32.1C.06 (event code)

The backup job ticket was submitted with invalid credentials

32.1C.07 (event code)

Backup restore permissions error

There was an error during the creation, read, or write of the restore file.

32.1C.08 (event code)

Not enough disk space to perform backup/restore or network share issue

There was an error during the creation, read, or write of the backup file.

32.1C.09 (event code)

Tried to restore a backup file that was not valid for this product

The data in the backup file specified in the restore job ticket is no longer valid due to a corruption of the data or no loner present.

32.1C.0A (event code)

Backup file is invalid

The data in the backup file specified in the restore job ticket is no longer valid due to a corruption of the data or no loner present.

32.1C.0D (event code)

Backup/restore failed, auto-reboot failed, or the product might be busy

32.1C.11 (event code)

Backup/restore timeout while communicating with the engine

The backup was aborted because the product is busy.

32.1C.13 (event code) and **32.1C.14** (event code)

Not enough space exists to perform the backup

The backup was aborted because the disk is at a critical level or full.

Scheduled backup failure

32.1C.15 (event code)

Restore aborted because the backup file was created by a previous version of firmware no longer supported by the feature.

32.1C.2E (event code)

The restore was aborted because the product is busy.

32.1C.2F (event code)

Reset failure

32.1C.40 (event code)

The backup operation completed successfully (informational).

32.1C.41 (event code)

The backup operation encountered an error (informational).

32.1C.42 (event code)

The backup operation completed, but with a warning message (informational).

32.1C.43 (event code)

A component in the backup file is not supported by the current version of firmware and will not be restored (informational).

32.1C.44 (event code)

A component in the backup file is not transferable to another product and will not be restored (informational).

32.1C.45 (event code)

Some data was not included in the backup file (informational).

32.1C.46 (event code)

An expected component could not be found and was thus not backed up. Because components should be known on backups, this code is a warning (informational).

32.1C.47 (event code)

Some data was not restored from the backup file (informational).

32.1C.48 (event code)

The backup job ticket was submitted using an invalid network path.

32.1C.49 (event code)

The backup job ticket was submitted with a bad encryption.

32.1C.4A (event code)

An error occurred when creating the temporary directories used to store the backup files in transition to and from the compressed (ZIP) file.

32.1C.56 (event code)

Reset aborted. Backup/restore in progress (informational).

32.1C.57 (event code)

Reset aborted (informational).

32.1C.58 (event code)

Unknown reset error (informational).

32.1C.60 (event code)

The restore operation completed successfully (informational).

32.1C.61 (event code)

The restore operation encountered an error.

32.1C.62 (event code)

The restore operation completed, but with a warning message.

32.1C.68 (event code)

The restore job ticket was submitted using an invalid network path.

32.1C.69 (event code)

The restore job ticket was submitted with a bad encryption personal identification number (PIN).

32.1C.6A (event code)

An error occurred when creating the temporary directories used to store the restore files in transition to and from the compressed (ZIP) file.

32.1C.6D (event code)

An unusual error occurred when running the restore.

Recommended action

32.1C.05 (event code)

Verify the credentials that were submitted. Check the domain, user name, and password.

32.1C.06 (event code)

Verify the credentials that were submitted. Check the domain, user name, and password.

32.1C.07 (event code)

Retry the job.

32.1C.08 (event code)

- Retry the job.
- Remove stored jobs and retry.
- Use a larger capacity storage device.
- Check the network share.

Remove any stored jobs, and then retry.

If the error persists, try using a larger capacity storage device and check the network share settings.

32.1C.09 (event code)

Use a valid backup file.

32.1C.0A (event code)

Use a valid backup file.

Reboot, and then observe the state of the product.

If the error persists, perform a partition clean from the **Preboot** menu.

32.1C.0D (event code)

Reboot, and then retry the backup/restore.

32.1C.11 (event code)

Wait until the product is idle, and then try again.

32.1C.13 (event code) and **32.1C.14** (event code)

Free up disk space, and then try again.

32.1C.15 (event code)

- Use the current backup file.

32.1C.2E (event code)

Wait until the product is idle, and then try again.

Turn the product off then on, and then retry.

32.1C.2F (event code)

Turn the product off then on, and then retry.

32.1C.40 (event code)

No action necessary.

32.1C.41 (event code)

No action necessary.

32.1C.42 (event code)

No action necessary.

32.1C.43 (event code)

No action necessary.

32.1C.44 (event code)

No action necessary.

32.1C.45 (event code)

No action necessary.

32.1C.46 (event code)

No action necessary.

32.1C.47 (event code)

No action necessary.

32.1C.48 (event code)

Check that a share was provided as part of the network path (not blank).

Check that the server and the share exists.

Check that the user has permission to access the share on the provided server.

32.1C.49 (event code)

Verify that the encryption personal identification number (PIN) meets the restrictions for the product.

32.1C.4A (event code)

Retry the job.

If this does not resolve the issue, turn the product off then on again and retry the job.

If the error persists, perform a **Partial Clean** using the **Preboot** menu.

32.1C.56 (event code)

No action necessary.

32.1C.57 (event code)

No action necessary.

32.1C.58 (event code)

No action necessary.

32.1C.60 (event code)

No action necessary.

32.1C.61 (event code)

Review the error log to see specific details about the failure.

32.1C.62 (event code)

Review the error log to see specific details about the failure.

32.1C.68 (event code)

Check that a share was provided as part of the network path (not blank).

Check that the server and the share exist.

Check that the user has permission to access the share on the provided server.

Check that the path includes the compressed (ZIP) file name as part of the path

32.1C.69 (event code)

Verify the encryption personal identification number (PIN) is the same PIN used to encrypt the backup file.

32.1C.6A (event code)

Retry the job.

32.1C.6D (event code)

Retry the job.

40.XX.YZ Error Messages

40.00.01 USB I/O buffer overflow To continue, touch “OK”

Description

The USB buffer has overflowed.

Recommended action

1. Touch the **OK** button to print the transferred date (some data might be lost).
2. Check the host configuration.

40.00.02 Embedded I/O buffer overflow To continue, touch “OK”

Description

The product has experienced a JetDirect buffer overflow.

Recommended action

1. Touch the **OK** button to print the transferred date (some data might be lost).
2. Check the host configuration.

40.00.03 EIO <X> buffer overflow To continue, touch “OK”

Description

Too much data was sent to the EIO card in the specified slot (x). An incorrect communications protocol might be in use.

Recommended action

Touch the **OK** button to print the transferred date (some data might be lost).

40.00.04 EIO <X> bad transmission To continue, touch “OK”

Description

The connection between the product and the USB device has been broken.

Recommended action

1. Touch the **OK** button to clear the error message and continue printing.
2. Remove, and then reinstall the USB device.

40.00.05 Embedded I/O bad transmission To continue, touch “OK”

Description

The USB device has been removed.

Recommended action

1. Touch the **OK** button to clear the error message (data will be lost).
2. Install the USB device.

40.08.0X USB storage accessory removed

Description

X = 0 or ;1 information code.

Secure file erase is enabled.

Recommended action

No action necessary.

40.0X.05 USB storage accessory removed

Description

X = 1, 2, 3, 5, or 6; information code.

The USB storage accessory was removed.

Recommended action

No action necessary.

41.XX.YZ Error Messages

41.01.YZ

Description

Event log error message: 41.01.YZ.

An unknown misprint error occurred on the product.

Y = Type, Z = Tray

- Y = 0: Photo Media (1, 2, or 3)
- Y = 1: Auto Sense (Normal)
- Y = 2: Normal (typed not from Auto Sense)
- Y = 3: Light media 1, 2, or 3 mode
- Y = 4: Heavy media 1
- Y = 5: Heavy media 2
- Y = 6: Heavy media 3
- Y = 7: Glossy media 1
- Y = 8: Glossy media 2
- Y = 9: Glossy media 3
- Y = A: Glossy film
- Y = B: OHT
- Y = C: Label

- Y = D: Envelope 1, 2, or 3 mode
- Y = E: Rough
- Y = F: Other mode
- Z = 0: From unknown tray
- Z = 1: From Tray 1
- Z = 2: From Tray 2
- Z = 3: From Tray 3
- Z = 4: From Tray 4
- Z = 5: From Tray 5
- Z = 6: From Tray 6
- Z = 7: From Tray 7
- Z = 8: From Tray 8
- Z = 9: From Tray 9
- Z = D: From duplex

Recommended action

1. To continue printing, press ✓.
2. Turn the product off, and then on again.
3. Resend the print job.
4. Replace or reseat the toner cartridge to test.
5. Check the toner cartridge before replacing any other parts (HP original?, connectors, etc.).
6. Reseat the connections to the laser/scanner and the DC controller.
7. If the error persists, replace the laser/scanner.
8. Replace the upper cable guide assembly.
9. Replace the DC controller.

41.02.00

Description

A beam detected misprint error.

Recommended action

1. To clear the error message, touch **OK**.
2. If the error persists, turn the product off, and then on again.
3. Resend the print job.

4. Reseat the connections to the laser/scanner and the DC controller.
5. Replace the laser/scanner.

41.03.FZ Unknown Misprint Error

Description

This is a general misprint error. Either media is loaded off-center with the side guides in the tray or a media width sensor failure occurred from an unknown tray. The error will be one of the following:

- **41.03.F0**
- **41.03.F1**
- **41.03.F2**
- **41.03.F3**
- **41.03.F4**
- **41.03.F5**
- **41.03.FD**

Recommended action

1. Reload the tray, verifying that the guides in the tray are flush with the loaded media in the tray.
2. Try the print job again.

   Watch the mechanism to see if it is functioning correctly. If the linkage is broken, replace the paper tray.
3. If the error persists, print a Configuration Page and note the paper size for the tray in question.
   - If the size is not reported correctly, run the tray size sensor test in the **Diagnostic** menu.
   - If the tray size sensors test as **GOOD**, replace the paper tray.
   - If the tray size sensors test as **BAD**, check the cable connections between the tray size sensor and the DC Controller.

     If the cable connections are plugged in correctly and the cables are not compromised, replace the correct component that contains the tray size sensing switches.

41.03.YZ Unexpected size in envelope feeder To use another tray, touch "Options "

Description

The product detected a different paper size than expected.

Y = Type, Z = Tray

- Y = 0 Size mismatch. Detected media is longer or shorter than expected.
- Y = A Size mismatch. Detected media too long.
- Y = B Size mismatch. Detected media too short.
- Y = C Size mismatch. Inter-page gap error.

- Z = D Source is the duplexer.
- Z = E Source is the envelope feeder.
- Z = 2 Source is Tray 2.
- Z = 3 Source is Tray 3.
- Z = 4 Source is Tray 4.
- Z = 5 Source is Tray 5.

Recommended action

1. Make sure that the tray is loaded with the correct paper size and that the sliding paper guides are correctly adjusted.
2. Use the Tray/Bin manual sensor test to verify that the cassette media switch is correctly functioning.
3. If the error persists, replace the lifter assembly.

41.03.YZ Unexpected size in tray <X>

Description

The product detected a different paper size than expected.

Y = Type, Z = Tray

- Y = 0 Size mismatch. Detected media is longer or shorter than expected.
- Y = A Size mismatch. Detected media too long.
- Y = B Size mismatch. Detected media too short.
- Y = C Size mismatch. Inter-page gap error.
- Z = D Source is the duplexer.
- Z = E Source is the envelope feeder.
- Z = 1 Source is Tray 1.
- Z = 2 Source is Tray 2.
- Z = 3 Source is Tray 3.
- Z = 4 Source is Tray 4.
- Z = 5 Source is Tray 5.

Recommended action

1. Make sure that the feeder is loaded with the correct paper size and that the sliding paper guides are correctly adjusted.
2. Use the Tray/Bin manual sensor test to verify that the envelope feeder paper sensor is correctly functioning.
3. If the error persists, replace the envelope feeder.

41.04.00 Printer Error

Description

A printer error occurred: No video sync 4.

Recommended action

1. Turn the product off, and then on again.
2. Resend the print job.
3. Swap out or reseat the toner cartridge to test it.
4. Check the toner cartridge before replacing any other parts (HP original?, connectors, etc.).
5. Reseat the connections to the laser/scanner and the DC controller.
6. If the error persists, replace the laser/scanner.
7. Replace the upper cable guide assembly.
8. Replace the DC controller.

41.05.YZ Unexpected type in tray <X>

Description

The product detected a different paper type than expected.

Tray X is loaded with a media type (transparencies, envelopes, etc.) that is different than what they tray is configured to use.

Y = Type, Z = Tray

- Y = 0 (expected type) Unknown
- Y = 1 (expected type) Normal media
- Y = 3 (expected type) LBP OHT
- Y = 6 (expected type) Non-assured OHT
- Y = 7 (expected type) Heavy media
- Y = 8 (expected type) Light media
- Y = 9 (expected type) Rough media
- Y = C (expected type) Heavy media 3
- Y = D (expected type) Heavy media 2
- Z = 1 (detected type) Normal media
- Z = 3 (detected type) LBP OHT
- Z = 6 (detected type) Non-assured OHT
- Z = 7 (detected type) Heavy media
- Z = 8 (detected type) Light media

- Z = 9 (detected type) Rough media
- Z = B (detected type) Heavy glossy media (glossy media 2)
- Z = C (detected type) Heavy media 3x
- Z = D (detected type) Heavy media 2

Recommended action

1. Load the tray with the size and type of paper indicated, or use another tray if available.
2. If this message displays and the tray is loaded with the correct paper type, check the print driver settings to make sure they match the tray type settings.
3. Check all application and product settings to make sure that the **Type** setting is correct.

41.XX.YZ Error To continue, touch “OK”

Description

This section covers all other errors of the form 41.XX.YZ not covered in the previous sections.

A product error has occurred.

XX = error type

Y = fuser mode

Z = input tray

- XX = 02 Beam detect misprint
- XX = 09 Sub thermistor abnormally high
- XX = 18 Scan line inclination adjustment
- XX = 20 Image drum HV
- Y = 2 Normal typed (not AutoSense)
- Y = 3 Light media 1, 2, 3: typed or AutoSense
- Y = 4 Heavy media 1: typed or AutoSense
- Z = 0 Envelope feeder
- Z = 1 Tray 1
- Z = 2 Tray 2
- Z = 3 Tray 3
- Z = 4 Tray 4
- Z = 5 Tray 5
- Z = 6 Tray 6
- D Duplexer

Recommended action

1. To clear the message, touch the **OK** button.
2. If the message displays again, turn the product off, and then on again.
3. If the error persists, replace the DC Controller PCA.

42.XX.YY Error Messages

42.XX.YY Error Event Log message

Description

Internal system failure.

Recommended action

1. Turn the product off, then on, and then retry.
2. If the error persists, clear the firmware image from the active partition by using the **Partial Clean** item in the **Preboot** menu.

44.XX.XX Error Messages

44.01.XX Error Event log message (MFP Only)

Description

A digital send error has occurred.

Recommended action

Try to send the job again.

No action necessary. This error message should automatically clear.

44.03.XX Error Event log message (MFP Only)

Description

A digital send error has occurred.

Recommended action

Try to send the job again.

44.10.XX Error Event log message (MFP Only)

Description

A send to e-mail error has occurred.

Recommended action

No action necessary.

44.34.XX Error Event log message (MFP Only)

Description

A fax error has occurred.

Recommended action

1. Try to send the job again.
2. If the issue persists, see document c03264726, “HP LaserJet Enterprise M4555 MFP Product Series - Solve fax problems,” for additional fax troubleshooting information.

44.92.XX Error Event log message (MFP Only)

Description

A fax error has occurred.

Recommended action

1. Try to send the job again.
2. If the issue persists, see document c03264726, “HP LaserJet Enterprise M4555 MFP Product Series - Solve fax problems,” for additional fax troubleshooting information.

47.XX.XX Error Messages

47.00.XX

Description

Back channel internal error

Recommended action

1. Turn the product off, and then on again.
2. Resend the print job.
3. If the error persists, clear the active partition by using the **Partial Clean** item in the **Preboot** menu.

47.01.XX

Description

Image transformer internal error

Recommended action

1. Turn the product off, and then on again.
2. Resend the print job.
3. If the error persists, clear the active partition by using the **Partial Clean** item in the **Preboot** menu.

47.02.XX

Description

Job parser internal error

Recommended action

1. Turn the product off, and then on again.
2. Resend the print job.
3. If the error persists, clear the active partition by using the **Partial Clean** item in the **Preboot** menu.

47.03.XX

Description

Print job internal error

Recommended action

1. Turn the product off, and then on again.
2. Resend the print job.
3. If the error persists, clear the active partition by using the **Partial Clean** item in the **Preboot** menu.

47.04.XX

Description

Print spooler 9100 internal error

Recommended action

1. Turn the product off, and then on again.
2. Resend the print job.
3. If the error persists, clear the active partition by using the **Partial Clean** item in the **Preboot** menu.

47.05.00

Description

Print spooler framework internal error

Recommended action

1. Turn the product off, and then on again.
2. Resend the print job.
3. If the error persists, clear the active partition by using the **Partial Clean** item in the **Preboot** menu.

47.06.XX

Description

Print App internal error

Recommended action

1. Turn the product off, and then on again.
2. Resend the print job.
3. If the error persists, clear the active partition by using the **Partial Clean** item in the **Preboot** menu.

47.WX.YZ Printer Calibration Failed To continue, touch “OK”

Description

The device is unable to access or implement one of the image patterns files.

Y = Calibration type, Z = Event

- 47.FC.20 (event code) Error Diffusion Image not found at system initialization
- 47.FC.21 (event code) Error Diffusion Store image failure
- 47.FC.22 (event code) Error Diffusion Image not found
- 47.FC.23 Error Diffusion Print engine execution failure
- 47.FC.30 0 (event code) Drum Speed Adjustment Image not found at system initialization
- 47.FC.31 (event code) Drum Speed Adjustment Store image failure
- 47.FC.32 (event code) Drum Speed Adjustment Image not found
- 47.FC.33 (event code) Drum Speed Adjustment Print engine execution failure
- 47.FC.40 (event code) Pulse Width Modulation Image not found at system initialization
- 47.FC.41 (event code) Pulse Width Modulation Store image failure
- 47.FC.42 (event code) Pulse Width Modulation Image not found
- 47.FC.43 (event code) Pulse Width Modulation Print engine execution failure

Recommended action

1. Turn the product off, and then on again.
2. If the error persists, reload the firmware.

48.XX.YY Error Messages

48.XX.YY

Description

A job framework internal error has occurred.

Recommended action

1. No action should be necessary.
2. If the error persists, upgrade the product firmware.
3. If the issue persists, continue troubleshooting with the flowcharts for either Intermittent or Persistent 49 error troubleshooting (whichever is appropriate) in document c03122817, “HP LaserJet FutureSmart Devices - 49 Error Troubleshooting (Persistent and Intermittent)”.

49.XX.YY Error Messages

49.XX.YY Error To continue turn off then on

Description

A firmware error occurred. Corrupted print jobs, software application issues, non-product specific print drivers, poor quality USB or network cables, bad network connections or incorrect configurations, invalid firmware operations, or unsupported accessories can cause this error.

Recommended action

1. Turn the product off, and then on.
2. If the error persists, check the following:
   - The error might be caused by a network connectivity problem, such as a bad interface cable, a bad USB port, or an invalid network configuration setting.
   - The error might be caused by the print job, due to an invalid print driver, a problem with the software application, or a problem with the file being printed.
   - Upgrading the product firmware might help resolve the error. See the product user guide for more information.

When a 49 error occurs, the user sees a 49.XXXX message on the control panel (where XXXX is replaced by a combination of letters and numbers). A 49 error might happen at any time for multiple reasons. Although some types of 49 errors can be caused by hardware failures, it is more common for 49 errors to be caused by printing a specific document or performing some task on the product.

49 errors most often occur when a product is asked to perform an action that the product firmware is not capable of and might not have been designed to comply with, such as:

- Printing files with unsupported programming commands
- A unique combination of user environment and user interactions with the product
- Interfacing with a third-party solution that was not designed to work with the product
- Specific timing, network traffic, or concurrent processing of jobs

Each of these interactions could cause the product firmware to initiate an action that the product cannot accomplish. In situations like this, the product might present the error if it has no other option. When these errors occur, the only way to recover is to turn the product's power off and back on.

NOTE: LaserJet formatter PCAs are rarely the root cause of 49 service errors. Please do not replace the formatter or flash unless troubleshooting has identified the formatter as the root cause.

If the error persists, continue troubleshooting with the flowcharts for either Intermittent or Persistent 49 error troubleshooting (whichever is appropriate) in document c03122817, “HP LaserJet FutureSmart Devices - 49 Error Troubleshooting (Persistent and Intermittent)”.

50.WX.YZ Error Messages

50.WX.YZ Fuser error To continue turn off then on

Description

The fuser has experienced an error.

W = fuser error code, X = fuser mode, Y = previous printer sleep state, and Z = next printer sleep state.

Fuser modes and sleep states are listed after all 50.WX.YZ troubleshooting.

The specific issues are:

- **50.1**: Low fuser temperature
- **50.2**: Fuser warm up service
- **50.3**: High fuser temperature
- **50.4**: Drive circuit fault
- **50.6**: Open fuser circuit (heating element failure)
- **50.7**: Depressurizing mechanism malfunction
- **50.8**: Low fuser temperature 2
- **50.9**: High fuser temperature 2
- **50.A**: Low fuser temperature 3
- **50.B**: High fuser temperature 3

Recommended action

1. Turn the product off, and then on.
2. If the error returns, turn the product off and ensure the printer is directly plugged into a wall outlet (remove any surge protector or UPS).
3. If the error persists, try a different wall outlet (if possible), one that is preferably on a dedicated or different circuit.
4. Make sure that the correct fuser model is installed in the product and that it meets the appropriate voltage requirements.
5. Make sure the fuser is seated properly.
6. If the error persists, continue troubleshooting based on the individual error listed below.

50.1

Low fuser temperature failure

1. Remove and reinstall the fuser. Make sure that it is seated correctly.
2. Make sure that there is no residual paper in the fuser.
3. Check the product power source. Make sure that the power source meets product requirements. Make sure that the product is the only device using the circuit.
4. Check the connector (J514) between the fuser and the printer. If it is damaged, replace the fuser connector assembly or fuser.
5. If the issue persists, replace the fuser.

50.2

Fuser warm-up error

1. Remove and reinstall the fuser. Make sure that it is seated correctly.
2. Make sure that there is no residual paper in the fuser.
3. Check the product power source. Make sure that the power source meets product requirements. Make sure that the product is the only device using the circuit.
4. Check the connector (J514) between the fuser and the printer. If it is damaged, replace the fuser connector assembly or fuser.
5. If the product has been serviced previously, check the connectors (J219 and J206) on the DC controller PCA and the connectors (J90 and J91) on the power line between the low voltage power supply assembly and the fuser.
6. If the issue persists, replace the fuser.
7. If the issue persists, replace the low voltage power supply assembly.

50.3

High fuser temperature

1. Remove and reinstall the fuser. Make sure that it is seated correctly.
2. Check the paper type setting in the product control panel menus and in the print driver. Make sure that the settings match and are correct for the type of media being used.
3. Check the connector (J514) between the fuser and the printer. If it is damaged, replace the fuser connector assembly or fuser.
4. If the issue persists, replace the low voltage power supply.
5. Perform a component test on the fuser motor. Does the motor rotate?
   - If no, replace the fuser.
   - If yes, check the cable guide assembly for damage. Replace the cable guide assembly, low voltage power supply, and then the DC controller if necessary.

50.4

Drive circuit fault

1. Check the product power source. Make sure that the power source meets product requirements.

NOTE: If the power source does not meet the power frequency requirements of 43 to 67Hz, the fuser temperature control does not work correctly and causes this error.

2. If possible, connect the product to an outlet where another product is functioning to verify the power connection.
3. Check and reconnect the connectors (J206 and J219) on the DC controller PCA.
4. If the error persists, replace the cable guide assembly, LVPS, and then the DC controller if necessary.

50.6

Open fuser circuit (heating element failure)

1. Remove and reinstall the fuser. Make sure that it is seated correctly.
2. Check the connector (J514) between the fuser and the printer. If it is damaged, replace the fuser connector assembly or fuser.
3. If the product has been serviced previously, check the connectors (J219 and J206) on the DC controller PCA and the connectors (J90 and J91) on the power line between the low voltage power supply assembly and the fuser.
4. If the issue persists, replace the fuser.
5. If the issue persists, replace the low voltage power supply assembly.
6. If the issue persists, replace the DC controller PCA.

50.7

Fuser pressure-release mechanism failure

1. Remove and reinstall the fuser. Make sure there is no residual paper in the fuser.
2. Check the connector (J514) between the fuser and the printer. If it is damaged, replace the fuser connector assembly or fuser.
3. Run the sensor test in the sensor monitor mode to verify that the fuser depressurization sensor is functioning correctly. If it is not, replace the fuser.
4. Run the fuser motor test in the actuator drive mode to verify that the fuser motor is functioning correctly. If it is not, replace the fuser motor.
5. If the issue persists, replace the fuser.

50.8

Low fuser temperature 2

1. Remove and reinstall the fuser. Make sure that it is seated correctly.
2. Make sure that there is no residual paper in the fuser.
3. Check the product power source. Make sure that the power source meets product requirements. Make sure that the product is the only device using the circuit.
4. Check the connector (J514) between the fuser and the printer. If it is damaged, replace the fuser connector assembly or fuser.

5. If the product has been serviced previously, check the connectors (J219 and J206) on the DC controller PCA and the connectors (J90 and J91) on the power line between the low voltage power supply assembly and the fuser.
6. If the issue persists, replace the fuser.
7. If the issue persists, replace the low voltage power supply assembly.

50.9

High fuser temperature 2

1. Remove and reinstall the fuser. Make sure that it is seated correctly.
2. Check the paper type setting in the product control panel menus and in the print driver. Make sure that the settings match and are correct for the type of media being used.
3. Check the connector (J514) between the fuser and the printer. If it is damaged, replace the fuser connector assembly or fuser.
4. If the issue persists, replace the fuser.
5. If the issue persists, replace the low voltage power supply assembly.

50.A

Low fuser temperature 3

1. Remove and reinstall the fuser. Make sure that it is seated correctly.
2. Make sure that there is no residual paper in the fuser.
3. Check the product power source. Make sure that the power source meets product requirements. Make sure that the product is the only device using the circuit.
4. Check the connector (J514) between the fuser and the printer. If it is damaged, replace the fuser connector assembly or fuser.
5. If the issue persists, replace the fuser.

50.1B

High fuser temperature 3

1. Remove and reinstall the fuser. Make sure that it is seated correctly.
2. Check the paper type setting in the product control panel menus and in the print driver. Make sure that the settings match and are correct for the type of media being used.
3. Check the connector (J514) between the fuser and the printer. If it is damaged, replace the fuser connector assembly or fuser.
4. If the issue persists, replace the fuser.
5. If the issue persists, replace the low voltage power supply assembly.

Fuser Modes

- 0 = Photo Media 1, 2, 3
- 1 = Normal—Auto Sense

- 2 = Normal
- 3 = Light 1
- 4 = Heavy 1
- 5 = Heavy 2
- 6 = Heavy 3
- 7 = Glossy 1
- 8 = Glossy 2
- 9 = Glossy 3
- A = Glossy Film
- B = Transparency
- C = Label
- D = Envelope 1
- E = Rough

Sleep States

- 0 = Printing
- 1 = Standby level 1 (no temperature control)
- 2 = Standby level 2 (high temperature control)
- 3 = Standby level 3 (middle temperature control)
- 4 = Standby level 2 (low temperature control)
- 5 = Middle sleep
- 6 = Deep sleep
- F = Power off

51.XX.YZ, 52.XX.YZ Error Messages

51.00.10 Beam detect error

Description

A printer beam detect error occurred.

Recommended action

1. Reconnect the connector (J1801) of the BD sensor and connector J234 on the DC controller PCA.
2. Reconnect the connector (J151) of the laser scanner assembly and connector J234 on the DC controller PCA.
3. If the error persists, replace the laser/scanner.

4. If the error persists, replace the upper cable guide assembly.
5. If the error persists, replace the DC controller.

51.00.19 / 51.00.20 Laser Scanner Error - Laser malfunction

Description

A printer laser scanner error occurred.

Recommended action

1. Reconnect the connector (J1) on the laser driver PCA and connector J209 on the DC controller PCA.
2. Reconnect the connector (J151) on the laser scanner assembly and connector J234 on the DC controller PCA.
3. Reconnect the intermediate connector (J23) of the laser scanner.
4. If the error persists, replace the laser/scanner.
5. If the error persists, replace the upper cable guide assembly.
6. If the error persists, replace the DC controller.

52.00.00/52.00.20 Scanner Startup/Rotation error

Description

A printer laser scanner startup (52.00.00) or rotation (52.00.20) error occurred.

Recommended action

1. Reconnect the connector (J151) on the laser scanner assembly and connector J234 on the DC controller PCA.
2. Reconnect the intermediate connector (J23) of the laser scanner.
3. Run the scanner motor drive test in the actuator drive mode to verify that the scanner motor is functioning correctly. If it is not, replace the laser scanner assembly.
4. If the error persists, replace the DC controller.

54.XX.YZ Error Messages

54.00.03 (EVENT LOG ONLY)

Description

Environmental sensor abnormality warning

Recommended action

1. Turn the product off, and then on.
2. If the environment sensor has been removed or replaced, check the connector from tray 1 to the environment sensor and the connector (J223) on the DC controller PCA.

3. If the error persists, replace the environment sensor assembly.
4. If the error persists, replace the right door assembly.

54.06.21 (EVENT LOG ONLY)

Description

Primary laser/scanner beam detect abnormality

Recommended action

1. Turn the product off, and then on.
2. If the product has had parts removed or replaced, check the connectors (J209 and J234) on the DC controller PCA.
3. Check the intermediate connection (J23).
4. If the error persists, replace the laser/scanner assembly.
5. If the error persists, replace the upper cable guide assembly..

55.XX.YZ, 56.XX.YZ Error Messages

55.00.01, 55.00.03, 55.00.04 DC controller error

Description

DC controller PCA error occurred.

- **55.00.01** (event code)

  DC controller memory error

- **55.00.03** (event code)

  DC controller no engine response

- **55.00.04** (event code)

  DC controller communications timeout

Recommended action

1. Turn the product off, and then on.
2. If the error persists, replace the DC controller PCA.

55.01.06, 55.02.06 DC controller error

Description

DC controller PCA error occurred.

The engine is not communicating with the formatter. The communication link between the formatter and the DC controller was lost. This can occur due to a timing error or intermittent connection loss between the formatter and the DC controller.

- **55.01.06** (event code)

NVRAM memory data error warning

- **55.02.06** (event code)

  NVRAM memory access error warning

Recommended action

1. Turn the product off, and then on.
2. Check the life remaining on the maintenance kit.
3. Reseat the formatter, DIMMs, and EIO cards.
4. If the error persists, replace the DC controller PCA.
5. If the error persists, replace the formatter.

56.00.YY Error

Description

Optional paper trays communication error occurred.

Recommended action

1. Turn the product off, and then on.
2. If the error persists, reseat the optional paper trays (HCO and HCI)..
3. Check the input connectors for damage. If a connector is damaged, replace the connector.

57.XX.YZ Error Messages

57.00.01 Error To continue turn off then on

Description

Power supply fan (FM-1) malfunction

Recommended action

1. Turn the product off, and then on.
2. Listen for fan noise at the right side, lower right hand corner of the product.
3. If no noise is heard, make sure that the connector (J226) on the DC controller PCA and the intermediate connector J25 between the DC controller and the fan are connected and undamaged.
4. If the error persists, replace the power supply fan (FM1).

57.00.02 Error To continue turn off then on

Description

Controller fan (FM-2) malfunction

Recommended action

1. Turn the product off, and then on.
2. Listen for fan noise at the rear side, center panel of the product.
3. If no noise is heard, make sure that the connector (J221) on the DC controller PCA and the intermediate connectors (J55 and J16) between the DC controller and the fan are connected correctly and undamaged.
4. If the error persists, replace the controller fan assembly (FM2).

57.00.03 Error To continue turn off then on

Description

Rear delivery fan (FM-3) malfunction (M806 only)

Recommended action

1. Turn the product off, and then on.
2. Listen for fan noise at the left side, upper back of the product.
3. If no noise is heard, make sure that the connectors (J1453 and J1451) on the intermediate PCA and connector (J205) on the DC controller are connected correctly and undamaged.
4. If the error persists, replace the face-down delivery assembly.

57.00.03 Error To continue turn off then on

Description

Rear delivery fan (FM-3B) malfunction (M830 only)

Recommended action

1. Turn the product off, and then on.
2. Listen for fan noise at the left side, upper back of the product.
3. If no noise is heard, make sure that the connectors (J1453B and J1451B) on the intermediate PCA and connector (J205) on the DC controller are connected correctly and undamaged.
4. If the error persists, replace the delivery fan assembly..

57.00.04 Error To continue turn off then on

Description

Front delivery fan (FM-4) malfunction (M806 only)

Recommended action

1. Turn the product off, and then on.
2. Listen for fan noise at the left side, upper front of the product.

3. If no noise is heard, make sure that the connectors (J1455 and J1451) on the intermediate PCA and connector (J205) on the DC controller board are connected correctly and undamaged.
4. If the error persists, replace the face-down delivery assembly.

57.00.04 Error To continue turn off then on

Description

Front delivery fan (FM-4B) malfunction (M830 only)

Recommended action

1. Turn the product off, and then on.
2. Listen for fan noise at the left side, upper front of the product.
3. If no noise is heard, make sure that the connectors (J1455B and J1451B) on the intermediate PCA, relay connector (J1451), and connector (J205) on the DC controller board are connected correctly and undamaged.
4. If the error persists, replace the delivery fan assembly.

57.00.05 Error To continue turn off then on

Description

Cartridge fan (FM-5) malfunction

Recommended action

1. Turn the product off, and then on.
2. Listen for fan noise at the right side, upper back of the product just above Tray 1.
3. If no noise is heard, make sure that the connector (J225) on the DC controller PCA is connected correctly and undamaged.
4. If the error persists, replace the cartridge fan assembly (FM5)

57.00.06 Error To continue turn off then on

Description

Center delivery fan (FM-6) (M806 only)

Recommended action

1. Turn the product off, and then on.
2. Listen for fan noise at the left side, upper center of the product.
3. If no noise is heard, make sure that the connector (J205) on the DC controller PCA and connectors (J1451 and J1454) on the intermediate PCA are connected correctly and undamaged.
4. If the error persists, replace the face-down delivery assembly.

57.00.07 Error To continue turn off then on

Description

Rear edge cooling fan (FM-7) malfunction

Recommended action

1. Turn the product off, and then on.
2. Listen for fan noise at the front left side of the product.

   NOTE: The cooling assembly is deep inside the product and will be difficult to hear.

3. If no noise is heard, make sure that the connector (J222) on the DC controller PCA and relay connector (J33) are connected correctly and undamaged.
4. If the error persists, replace the edge cooling fan assembly.

57.00.08 Error To continue turn off then on

Description

Front edge cooling fan (FM-8) malfunction

Recommended action

1. Turn the product off, and then on.
2. Listen for fan noise at the front left side of the product.

   NOTE: The cooling assembly is deep inside the product and will be difficult to hear.

3. If no noise is heard, make sure that the connector (J222) on the DC controller PCA and relay connector (J33) are connected correctly and undamaged.
4. If the error persists, replace the edge cooling fan assembly.

57.00.09 Error To continue turn off then on

Description

Condensation prevention fan (FM-9) malfunction

Recommended action

1. Turn the product off, and then on.
2. Listen for fan noise at the rear panel, left center of the product.
3. If no noise is heard, make sure that the connector (J226) on the DC controller PCA and intermediate connector (J26) are connected correctly and undamaged.
4. If the error persists, replace the condensation prevention fan FM-9.

57.00.10 Error To continue turn off then on

Description

Duplex fan (FM-2001) malfunction

Recommended action

1. Turn the product off, and then on.
2. Remove and reinstall the duplex unit to ensure a proper connection.
3. If the error persists, replace the duplex unit.

59.XX.YZ Error Messages

59.00.30 or 59.00.40

Description

A printer motor error occurred. Fuser motor error.

- **59.00.30**

  Fuser motor start up error

- **59.00.40**

  Fuser motor rotation error

Recommended action

1. Turn the product off, and then on.
2. Check the fuser for any jammed media that might be restricting proper movement of the fuser rollers.
3. Remove and reinstall the fuser.
4. Run the fuser motor test in the actuator drive mode to make sure that the fuser motor is functioning correctly. If it is not, replace the fuser motor.
5. Check the connector (J59) of the fuser motor and connector (J233) on the DC controller PCA.
6. If the error persists, replace the fuser motor.
7. If the error persists, replace the fuser assembly.
8. If the error persists, replace the fuser drive assembly.

59.05.50 or 59.05.60

Description

A printer motor error occurred. Main motor error.

- **59.05.50**

  Drum motor start up error

- **59.05.60**

  Drum motor rotation error

Recommended action

1. Turn the product off, and then on.
2. Run the drum motor test in the actuator drive mode to make sure that the drum motor is functioning correctly. If it is not, replace the drum motor.
3. Check the connector (J60) of the drum motor and connector (J222) on the DC controller PCA.
4. If grinding or clicking noises occur with the error, there might be other parts of the drive assembly causing the issue.
   - Registration assembly
   - Drum feed drive assembly
   - PIU of Tray 2 and Tray 3
5. If this is the suspected cause and the exact part causing the issue cannot be determined, all three parts should be replaced at the same time.
6. If no noises are associated with the error and the drum motor has already been replaced, replace the DC controller.

60.00.0Y, 62.00.00 Error Messages

60.00.02 Tray 2 lifting error

Description

Lifter driver assembly Tray 2 failure

A tray lift motor error has occurred.

Recommended action

1. On the product control panel, open the following menus:
   - **Administration**
   - **Troubleshooting**
   - **Diagnostic Tests**
2. Use the Tray/Bin manual sensor test to make sure that the Tray 2 paper (PS1409 and PS1410) surface sensors are functioning correctly.
3. If this part has been removed or replaced, check the connector (J221) on the DC controller PCA and interconnect J21.
4. If the error persists, replace the lifter drive assembly (Tray 2).

60.00.03 Tray 3 lifting error

Description

Lifter driver assembly Tray 3 failure

A tray lift motor error has occurred.

Recommended action

1. On the product control panel, open the following menus:
   - Administration
   - Troubleshooting
   - Diagnostic Tests
2. Use the Tray/Bin manual sensor test to make sure that the Tray 3 paper (PS1411 and PS1412) surface sensors are functioning correctly.
3. If this part has been removed or replaced, check the connector (J221) on the DC controller PCA and interconnect J21.
4. If the error persists, replace the lifter drive assembly (Tray 3).

60.00.04 Tray 4 lifting error

Description

Lifter driver assembly Tray 4 failure

A tray lift motor error has occurred.

Recommended action

1. On the product control panel, open the following menus:
   - Administration
   - Troubleshooting
   - Diagnostic Tests
2. Use the Tray/Bin manual sensor test to make sure that the Tray 4 paper (PS3101 and PS3103) surface sensors are functioning correctly.
3. If this part has been removed or replaced, check the connector (J3005) on the HCI controller PCA J906.
4. If the error persists, replace the lifter drive assembly (Tray 4).

60.00.05 Tray 5 lifting error

Description

Lifter driver assembly Tray 5 failure

A tray lift motor error has occurred.

Recommended action

1. On the product control panel, open the following menus:

- Administration
- Troubleshooting
- Diagnostic Tests

2. Use the Tray/Bin manual sensor test to make sure that the Tray 5 paper (PS3201 and PS3203) surface sensors are functioning correctly.
3. If this part has been removed or replaced, check the connector (J3015) on the HCI controller PCA J917.
4. If the error persists, replace the lifter drive assembly (Tray 5).

62.00.00 No system To continue turn off then on

Description

Internal system failure

Recommended action

1. Turn the product off, and then on.
2. Reload the firmware.
3. Perform a firmware upgrade.
4. If the error persists, replace the hard disk.

65.X0.AZ Error Messages

65.X0.AZ Output accessory Failure

Description

Output accessory disconnected

An external paper handling accessory connection has been interrupted.

- **65.40.A0**: Punch Unit disconnected
- **65.50.A0**: Folding Unit disconnected
- **65.80.A0**: Stapler/Stacker disconnected
- **65.80.A1**: Stapler/Stacker Unit connection interrupted
- **65.90.A0**: Booklet Make disconnected

Recommended action

1. Make sure that the latest firmware updates are installed for the engine and finisher.
2. Make sure that the finisher is grounded correctly.

- Make sure that the finisher is latched and locked to the engine by tightening the thumbscrew inside the front door.
- Make sure that the grounding-frame assembly (the bar with the wheel located between the engine and the finisher) is in the down position with the wheel touching the floor and that the grounding plate is not damaged.

NOTE: The grounding-frame assembly is in the up position when the finisher is shipped. It must be lowered when the finisher is installed.

3. Make sure that the communication cable from the finisher to the engine is installed correctly.
4. Make sure that all packing materials have been removed from the paper handling accessory.
5. Make sure that the connectors on the PCA's for the device are fully seated and not damaged.
6. Only if the error persists and none of the previous steps correct the problem, replace the controller PCA in question.

66.WX.YZ Error Messages

66.00.20

Description

Over Current Error

This is an output device failure related message.

Recommended action

There is no recommended action at this time.

66.00.40

Description

NVRAM Error

This is a finisher control board NVRAM error. The checksum for the finisher stacker controller PCA has an error when the power is turned on.

Recommended action

1. Turn the product off, and then on.
2. Make sure that the finisher is grounded correctly.
   - Make sure that the finisher is latched and locked to the engine by tightening the thumbscrew inside the front door.
   - Make sure that the grounding-frame assembly (the bar with the wheel located between the engine and the finisher) is in the down position with the wheel touching the floor and that the grounding plate is not damaged.

   NOTE: The grounding-frame assembly is in the up position when the finisher is shipped. It must be lowered when the finisher is installed.

3. Turn the engine power off, and then on to try to clear the error.
4. If the error persists, replace the stacker controller PCA.

66.00.50

Description

This is a CAN-CPU sequence error.

Recommended action

There is no recommended action at this time.

66.00.77

Description

This is a device communication error.

The communication between the print engine and the finisher has been interrupted or lost.

Recommended action

1. Make sure that the latest firmware updates are installed for the engine and the finisher.
2. Make sure that the finisher is grounded correctly.
   - Make sure that the finisher is latched and locked to the engine by tightening the thumbscrew inside the front door.
   - Make sure that the grounding-frame assembly (the bar with the wheel located between the engine and the finisher) is in the down position with the wheel touching the floor and that the grounding plate is not damaged.

     NOTE: The grounding-frame assembly is in the up position when the finisher is shipped. It must be lowered when the finisher is installed.
3. Make sure that the communication cable from the finisher to the engine is installed correctly.
4. Make sure that the connectors on the stacker controller PCA are fully seated and not damaged.
5. Only if the error persists and none of the previous steps correct the problem, replace the stacker controller PCA.

66.00.79

Description

This is a JetLink communication error.

The product has lost JetLink communication with the output device.

Recommended action

1. Turn off the product, and then disconnect the finisher.
2. Make sure that the grounding-frame assembly (the bar with the wheel located between the engine and the finisher) is in the down position with the wheel touching the floor and that the grounding plate is not damaged.

   NOTE: The grounding-frame assembly is in the up position when the finisher is shipped. It must be lowered when the finisher is installed.

3. Reconnect the finisher to the product.
4. Inspect and reconnect the JetLink cable (power and communication cable) from the finisher to the product.
5. Turn the product on.
6. If the error persists, replace the stacker controller PCA.

If the error was caused by exchanging finishers while the product was still on, perform the following steps:

1. Turn the product off, and then disconnect the finisher.
2. Make sure that the finisher is designed to be used with the product.
3. Reconnect the finisher to the product.
4. Turn the product on.

66.00.8Z

Description

There is an issue with paper delivery. The specific message varies depending on the cause, but the solution for each message is the same.

- **66.00.80**: Delivery Notice with PageID = 0x00
- **66.00.81**: Delivery Notice with proper PageInfo
- **66.00.82**: Paper delivered with unexpected timing
- **66.00.83**: PAGE_INFO (Change) without PAGE_INFO (New)

Recommended action

1. Follow the instructions in the online help.
2. Turn the product off, and then on.
3. If the error persists, see the output finishing device service manual for detailed instructions.

66.12.46

Description

Finisher - Communication Lost with Stitcher Controller PCA

This error occurs when communication between the stacker-controller board and the saddle-stitcher-controller board is lost or interrupted.

Recommended action

1. Make sure that the finisher is grounded correctly.
   - Make sure that the finisher is latched and locked to the engine by tightening the thumbscrew inside the front door.
   - Make sure that the grounding-frame assembly (the bar with the wheel located between the engine and the finisher) is in the down position with the wheel touching the floor and that the grounding plate is not damaged.

     NOTE: The grounding-frame assembly is in the up position when the finisher is shipped. It must be lowered when the finisher is installed.
2. Make sure that the connector J730 on the stacker controller PCA and the wiring between connector J22 on the saddle-stitcher controller PCA are fully seated and not damaged.
3. Replace the saddle-stitcher controller PCA.
4. If the error persists, replace the stacker controller PCA.

66.40.YZ

Description

Punch Unit Failure

The specific message varies depending on the cause, but the solution for each message is the same.

- 66.40.40: Punch NVRAM error
- 66.40.46: Punch Slide motor error
- 66.40.50: Punch unit CPU sequence error Punch unit micro controller unable to start punch unit
- 66.40.83: Punch motor failure

Recommended action

1. Follow the instructions in the online help.
2. Turn the product off, and then on.
3. If the error persists, see the output finishing device service manual for detailed instructions.

66.50.00

Description

Folding Unit Failure

An error has occurred in the folding unit.

Recommended action

1. Follow the instructions in the online help.
2. Turn the product off, and then on.
3. If the error persists, see the output finishing device service manual for detailed instructions.

66.60.16

Description

Stacker Gear Change Motor Error

The speed-change motor M110 and sensor PI117 are associated with this error

Finisher error - speed-change motor (M110)

The speed-change motor M110 and sensor PI117 are associated with this error

Recommended action

1. Turn the product off and turn it on.
2. If the error continues, Verify J3 on Stacker controller PCA is seated properly.
3. Replace Speed Change Motor (M110) or corresponding assembly.

66.60.25

Description

Stacker Shutter Motor Error

When the shutter clutch (CL101) and stack-ejection lower-roller clutch (CL102) are on, the shutter moves up (closed) when the stack-ejection motor (M102) turns forward and moves down (open, delivery enabled) when the motor turns backwards.

This error occurs when the shutter home-position sensor (PI113) indicates no change when the stack-ejection motor (M102) is activated for 3 seconds, indicating the shutter is not moving.

Recommended action

1. Inspect the shutter for damage. If the shutter cannot move freely, replace the shutter assembly.
2. Remove the lower guide (grate-shaped) and check sensor PI113 for damage.
3. Make sure that the sensor is securely fastened to the chassis.
4. Check for proper alignment of the shutter mounted on the back of the grate-shaped lower guide and the left mechanism on the finisher chassis.
5. Make sure that connector J6 and J19 on the stacker controller PCA is fully seated and not damaged.
6. Check CL101 during operation, and make sure that it is functioning correctly by activating prior to the error. Replace CL102 if necessary.
7. If the error persists, replace the stacker controller PCA.

66.60.27

Description

Stacker Align Motor Error (Front) M103

In order to neatly align the paper stack for either stapling or offsetting to take place, the front and rear aligning plats move to align each sheet of paper when it enters the processing tray.

This error occurs when the aligning plate either does not leave or when it does not return to the aligning-plate front-home-position sensor.

Recommended action

1. Turn the product off, and then on.
2. Make sure that there is no paper stuck in the jogger assembly.
3. Check connections J4 on the stacker controller PCA and intermediate connector J1032 to the motor (M103).
4. Run the test on alignment motors.
5. If the error persists, replace the required assembly.
6. If the error persists, replace the stacker controller PCA.

66.60.28

Description

Stacker Align Motor Error (Rear) M104

In order to neatly align the paper stack for either stapling or offsetting to take place, the front and rear aligning plats move to align each sheet of paper when it enters the processing tray.

This error occurs when the aligning plate either does not leave or when it does not return to the aligning-plate front-home-position sensor.

Recommended action

1. Turn the product off, and then on.
2. Make sure that there is no paper stuck in the jogger assembly.
3. Check connections J4 on the stacker controller PCA and intermediate connector J1032 to the motor (M104).
4. Run the test on alignment motors.
5. If the error persists, replace the required assembly.
6. If the error persists, replace the stacker controller PCA.

66.60.31

Description

BIN1 Tray Motor Error/Safety switch on — Finisher error - 1st-tray lift/lower motor (M107)

This error occurs when the output bin 1 does not active the home-position sensor (PI116) when the output-bin-1-shift motor (M107) is drive for 20 seconds.

NOTE: M107 moves both output bin 1 and the upper output bin that is attached to output bin 1 on the Stapler/Stacker finisher, but only output bin 1 on the Booklet Maker finisher.

It also occurs when output bin 1 does not move when output-bin-1-shift motor (M107) is driven for 4 seconds.

It also occurs when output-bin-1-switch (MSW103) is activated while output bin 1 is operating.

NOTE: Output-bin-1 home position is detected using the top sheet of paper on the bin when paper is present and the edge of the bin itself when there is no paper on the bin.

Recommended action

1. Manually release output bin 1, and then position it at the midpoint of its travel area.
2. On the product control panel, open the following menus:
   - Administration
   - Troubleshooting
   - Diagnostic Tests
   - Component Test
3. Test the output-bin-1–shift motor M107 using the finisher component test.
4. If output bin 1 moves during the test, continue with these steps.
5. If the paper-surface sensor flag was recently removed or replaced, make sure that it is installed correctly.

   NOTE: The four tabs under the clips must be inserted into the slots behind the roller shaft of the lower stack ejection roller.
6. Make sure that the paper-surface sensor flag is not damaged, moves freely, and is correctly aligned with the PI114 sensor body. Also, make sure that when the top edge of the output bin engages the sensor arm that the sensor flag moves into sensor PI114
7. Make sure that the sensor is securely fastened to the chassis.
8. Carefully clean the sensor body by gently blowing clean air across the sensor to remove dust and debris.
9. Make sure that intermediate connector J1040 and J7 on the stacker controller PCA are fully seated and not damaged. Check the wiring at the sensor.
10. If the error persists, replace sensor PI114.
11. If the error persists, replace the output-bin-1 assembly.

    NOTE: The output-bin-1 assembly includes the output-bin-1-shift motor (M1070), output-bin-1 switch (MSW103), output-bin-1 area sensors, and the output-bin-1 Area Sensor PCA.

If output bin 1 does not move during the test, perform the following steps.

1. Check the output-bin tracks for damage.
2. Replace the output-bin-1 assembly.

NOTE: NOTE: The output-bin-1 assembly includes the output-bin-1-shift motor (M1070), output-bin-1 switch (MSW103), output-bin-1 area sensors, and the output-bin-1 Area Sensor PCA.

Only if the error persists and none of the previous steps correct the problem, replace the stacker controller PCA.

66.60.32

Description

BIN2 Tray Motor Error

Finisher error – 2nd-tray lift/lower motor (M108)

Occurs when the output-bin 2 does not activate the home-position sensor (PI115) when the output-bin-1-shift motor (M108) is driven for 20 seconds.

Also occurs when bin-2 upper limit is detected by PS983, PS982, PS981 on the Tray-2-Area Sensor PCA when no paper has been sensed by the output-bin-2 paper sensor (PI112).

NOTE: Output-bin-2 home position is detected using the top sheet of paper on the bin when paper is present and the edge of the bin itself when there is no paper on the bin.

Control-panel diagnostics: M108 tray 2 (output-bin 2 motor) and PI115 output-bin-2 paper-surface sensor

Recommended action

1. Manually release output bin 2, and position it at the midpoint of its travel area.
2. Test the output-bin-2-shift motor M108 by using the finisher component test from the control-panel display.
   - Administration
   - Troubleshooting
   - Diagnostic Tests
   - Component Test
3. IF output bin 2 moves during the test, perform the following steps.
4. Verify that the paper-surface sensor flag is not damaged, moves freely, and is correctly aligned with the PI115 sensor body. Also verify that when the top edge of the output bin engages the sensor arm that the sensor flag moves into sensor PI114.
5. Make sure that the sensor is securely fastened to the chassis
6. Carefully clean the sensor body by gently blowing clean air across the sensor to remove dust and debris
7. Verify that intermediate connector J1040 and J8 on the stacker controller PCA are fully seated and not damaged. Check the wiring at the sensor.
8. If the error persist, replace sensor PI115

9. If the error persist, replace the output-bin-2 assembly..

NOTE: The output-bin-2 assembly includes the output-bin-2-shift motor (M108), output-bin-2 area sensors, and the output-bin-2 Area Sensor PCA.

10. If output bin 2 does not move during the test, perform the following steps.

11. Check the output-bin tracks for damage.

12. Replace the output-bin-2 assembly.

NOTE: The output-bin-2 assembly includes the output-bin-2-shift motor (M108), output-bin-2 area sensors, and the output-bin-2 Area Sensor PCA.

13. ONLYI if the error persists and none of the previous steps correct the problem, replace the stacker controller PCA.

66.60.33

Description

Stacker roller Lift Motor Error

Finisher error - lift/lower motor (M107 or M108)

This error occurs when the output-bin 1or 2 does not activate the Trays home-position sensor when the output-bin--shift motor (M107) is driven.

NOTE: Output-bin home position is detected using the top sheet of paper on the bin when paper is present and the edge of the bin itself when there is no paper on the bin.

Recommended action

1. Manually release the failing output bin, and position it at the midpoint of its travel area.

2. On the product control panel, open the following menus:

   - Administration
   - Troubleshooting
   - Diagnostic Tests
   - Component Test

3. Test the output-bin shift motor M107 or M108 by using the finisher component test from the control-panel display.

4. If the output bin moves during the test, perform the following steps.

5. If the paper-surface sensor flag was recently removed or replaced, make sure that it is installed correctly.

NOTE: The four tabs under the clips must be inserted into the slots behind the roller shaft of the lower stack ejection roller.

6. Make sure that the paper-surface sensor flag is not damaged, moves freely, and is correctly aligned with the sensor body. Also, make sure that when the top edge of the output bin engages the sensor arm that the sensor flag moves into sensor

7. Make sure that the sensor is securely fastened to the chassis.
8. Carefully clean the sensor body by gently blowing clean air across the sensor to remove dust and debris.
9. Verify that the connectors on the stacker controller PCA are fully seated and not damaged. Check the wiring at the sensor
10. If the error persist, replace the output-bin assembly.

66.60.34

Description

Stacker Assist Motor Error

In order to improve stacking performance when ejecting copies, a trailing-edge assist guide is used in addition to the stack-ejection roller to support the rear end of the stack during stack ejection.

Error occurs when the stacker trailing-edge guide does not leave its home position (PI109) after the stack trailing-edge motor (M109) has been turned on for 3 seconds.

Recommended action

1. On the product control panel, open the following menus:
   - **Administration**
   - **Troubleshooting**
   - **Diagnostic Tests**
   - **Component Test**
2. Test trailing edge motor M109 (stack trailing-edge assist motor)
3. If the trailing-edge assist guide does not move, perform the following steps:
4. Make sure that connector J4 on the stacker controller PCA is fully seated and not damaged also check the wiring at motor M109 and sensor PI109.
5. Replace the operation-tray assembly (processing tray).
6. Only if the error persists and none of the previous steps correct the problem, replace the Stacker

66.60.48

Description

Stacker-CPU Communication error

Occurs when the finisher's stacker-controller board has had an internal communication problem between the two processors on the board.

Recommended action

1. Make sure that the finisher is properly grounded.
2. Ensure that the finisher is latched and locked to the engine by tightening the thumbscrew inside the front door.
3. Ensure that the grounding-frame assembly (the bar with the wheel located between the engine and the finisher) is in the down position with the wheel touching the floor

66.60.50

Description

Stacker-CPU sequence error

Occurs when the finisher's stacker-controller board has had an internal sequence problem

Recommended action

1. Make sure that the finisher is properly grounded.
2. Ensure that the finisher is latched and locked to the engine by tightening the thumbscrew inside the front door.
3. Ensure that the grounding-frame assembly (the bar with the wheel located between the engine and the finisher) is in the down position with the wheel touching the floor

66.80.01

Description

Y-align malfunction

In order to neatly align the paper stack for either stapling or offsetting to take place, the front and rear aligning plates move to align each sheet when it enters the processing tray.

The error occurs when the aligning plate either does not leave or when it does not return to the aligning-plate front-home-position sensor.

Recommended action

1. Turn the product off, and then on.
2. Make sure that there is no paper stuck in the jogger assembly.
3. Check connections J4 on the stacker controller PCA and intermediate connector J1032.
4. Run the test on alignment motors.
5. If the error persists, replace the required assembly.
6. If the error persists, replace the stacker controller PCA.

66.80.02

Description

Jogger malfunction

In order to neatly align the paper stack for either stapling or offsetting to take place, the front and rear aligning plates move to align each sheet when it enters the processing tray.

The error occurs when the aligning plate either does not leave or when it does not return to the aligning-plate front-home-position sensor.

Recommended action

1. Turn the product off, and then on.
2. Make sure that there is no paper stuck in the jogger assembly.
3. Check connections J4 on the stacker controller PCA and intermediate connector J1032.
4. Run the test on alignment motors.
5. If the error persists, replace the required assembly.
6. If the error persists, replace the stacker controller PCA.

66.80.03

Description

Stapler malfunction

M105 Stapler mobility motor

Recommended action

Control panel diagnostics: M105-Staple Motor (Staple-Shift Motor) and PI110-Stapler Home Sensor (Stapler Home Position Sensor).

1. Test the upper stapler-shift motor M105 by using the finisher component test from the control-panel display.
   - If the stapler unit moves correctly, proceed to the next step.
   - If the stapler unit does not move correctly or moves erratically, perform the following steps:
     a. Check the flat-flexible cable (FFC) for damage (dents, folds, and/or tears). Replace the FFC if necessary.
     b. Check the FFC connectors and cable mounting areas.
     c. If the error persists, replace the stapler assembly.
2. Test the stapler-shift home-position sensor PI110 using the finisher component test from the product control panel.
   - If the sensor does not change state when the stapler unit is moved from the home position, perform the following steps:
     a. Make sure that the sensor is securely fastened to the chassis.
     b. Carefully clean the sensor body by gently blowing clean air across the sensor to remove dust band debris.

c. Make sure that connector J5 and J6 on the stacker controller PCA is fully seated and not damaged. Check the wiring at the sensor.

d. If the error persists, replace the stapler assembly.

NOTE: The stapler assembly includes the stapler-shift home position sensor PI110, stapler unit, shift-position-plate assembly, and the flat-flexible cable (FFC).

66.80.21

Description

Lift up malfunction

Recommended action

Turn the product off, and then on.

66.80.22

Description

Lift down malfunction

Recommended action

Turn the product off, and then on.

66.80.23

Description

Lift sensor malfunction

Recommended action

Turn the product off, and then on.

66.80.33

Description

Output roller malfunction

Recommended action

Turn the product off, and then on.

66.80.35

Description

Self priming malfunction

Recommended action

Turn the product off, and then on.

66.80.36

Description

Stapler Stacker motor error

Finisher upper-stapler motor failure (M41)

Error occurs either when the stapler does not leave stapler home position (PI120) after staple motor (M41) is driven for 0.4 seconds or when it does not return to stapler home position after the staple motor has detected a motor-lock condition and the motor is driven backwards for 0.4 seconds, attempting to reach home position.

NOTE: PI120 and M41 are located on the stapler assembly and can only be replaced by replacing the entire stapler assembly. M41 (Staple Motor) drives the insertion and crimping of the staple only (not the location of the staple on the paper). PI120 senses the home position of the stapler as it is inserting and crimping a staple only (not the location of the staple on the paper).

The stapler-safety switch (MS103) assures that the stapler motor (M41) is disabled when it senses a finger might be in the stapler.

Recommended action

Control panel diagnostics: M41 Staple Motor (Staple-Shift Motor) and PI120 Stapler Home Sensor (Stapler Home Position Sensor).

1. Test the upper stapler-shift motor M41 using the finisher component test from the product control panel.
   - If the stapler unit moves correctly, proceed to the next step.
   - If the stapler unit does not move correctly or moves erratically, perform the following steps:
     a. Check the flat-flexible cable (FFC) for damage (dents, folds, and/or tears). Replace the FFC if necessary.
     b. Check the FFC connectors and cable mounting areas.
     c. If the error persists, replace the stapler assembly.
2. Test the stapler-shift home-position sensor PI120 using the finisher component test from the product control panel.
   - If the sensor does not change state when the stapler unit is moved from the home position, perform the following steps:
     a. Make sure that the sensor is securely fastened to the chassis.
     b. Carefully clean the sensor body by gently blowing clean air across the sensor to remove dust band debris.
     c. Make sure that connector J5 on the stacker controller PCA is fully seated and not damaged. Check the wiring at the sensor.
     d. If the error persists, replace the stapler assembly.

     NOTE: The stapler assembly includes the stapler-shift home position sensor PI120, stapler unit, shift-position-plate assembly, and the flat-flexible cable (FFC).

66.80.38

Description

Stacker Stapler Mechanism Failed

Occurs when stapler-alignment-interference sensor (PI116) is activated, signaling that the stapler unit is not in its proper position for stapling to occur. This is to prevent damage to stapler from occurring when stapler is positioned over one of the three stoppers when the signal to staple has been sent.

Recommended action

1. If the stapler unite does not move correctly or moves erratically, check the flat-flexible cable (FFC) for damage (dents, folds, and/or tears). Replace the FFC if necessary.
2. If the stacker controller PCA was recently replaced, adjust the staple alignment and staple position.
3. If the stapler is not positioned over a stopper when this error occurs, perform the following steps:
   a. Make sure that the stapler unit is correctly mounted and securely fastened to the base.
   b. Make sure that the sensor is not obstructed or damaged. Make sure that the sensor flag is not damaged, moves freely, and is aligned correctly with the sensor body.
   c. If the error persists, replace the stapler subassembly.

   NOTE: The stapler subassembly includes the stapler unit and base.

66.80.46

Description

Stacker Staple Slide motor error

Finisher upper stapler shift motor failure (M105).

This error occurs when the stapler does not leave the stapler-shift home-position sensor (PI110) after the stapler-shift motor (M105) has driven for 5 seconds.

This error also occurs when the stapler fails to return to the stapler-shift home-position sensor (PI110) after the stapler-shift motor (M105) has driven for 20 seconds.

Recommended action

Control panel diagnostics: M105 Staple Motor (Staple-Shift Motor) and PI110 Stapler Home Sensor (Stapler Home Position Sensor).

1. Test the upper stapler-shift motor M105 using the finisher component test from the product control panel.
   - If the stapler unit moves correctly, proceed to the next step.
   - If the stapler unit does not move correctly or moves erratically, perform the following steps:

a. Check the flat-flexible cable (FFC) for damage (dents, folds, and/or tears). Replace the FFC if necessary.

b. Check the FFC connectors and cable mounting areas.

c. If the error persists, replace the stapler assembly.

2. Test the stapler-shift home-position sensor PI110 using the finisher component test from the product control panel.

- If the sensor does not change state when the stapler unit is moved from the home position, perform the following steps:

  a. Make sure that the sensor is securely fastened to the chassis.

  b. Carefully clean the sensor body by gently blowing clean air across the sensor to remove dust band debris.

  c. Make sure that connector J6 and interconnect J1040 on the stacker controller PCA is fully seated and not damaged. Check the wiring at the sensor.

  d. If the error persists, replace the stapler assembly.

  NOTE: The stapler assembly includes the stapler-shift home position sensor PI110 stapler unit, shift-position-plate assembly, and the flat-flexible cable (FFC).

66.80.51

Description

System error (FW error)

Recommended action

Turn the product off, and then on.

66.80.55

Description

System error 5 (FW error)

Recommended action

Turn the product off, and then on.

66.80.56

Description

System error 6 (FW error)

Recommended action

Turn the product off, and then on.

66.80.57

Description

System error 7 (FW error)

Recommended action

Turn the product off, and then on.

66.80.58

Description

System error 8 (FW error)

Recommended action

Turn the product off, and then on.

66.80.59

Description

System error 9 (FW error)

Recommended action

Turn the product off, and then on.

66.80.60

Description

System error 10 (inter-page delay mismatch)

Recommended action

Turn the product off, and then on.

66.80.61

Description

System error 11 (lifter task trouble)

Recommended action

Turn the product off, and then on.

66.80.62

Description

System error 12 (inter-page delay mismatch)

Recommended action

Turn the product off, and then on.

66.80.63

Description

System error 13 (FW error)

Recommended action

Turn the product off, and then on.

66.80.64

Description

System error 14 (FW error)

Recommended action

Turn the product off, and then on.

66.80.65

Description

System error 15 (FW error)

Recommended action

Turn the product off, and then on.

66.80.70

Description

Page-info in flush

Recommended action

Turn the product off, and then on.

66.80.71

Description

Flush request in PDLV

Recommended action

Turn the product off, and then on.

66.80.72

Description

Delivery notice error

Recommended action

Turn the product off, and then on.

66.80.73

Description

Flush request in checking paper path

Recommended action

Turn the product off, and then on.

66.80.74

Description

Checking paper path start in PDLV

Recommended action

Turn the product off, and then on.

66.80.75

Description

Flush request in flush

Recommended action

Turn the product off, and then on.

66.80.76

Description

Non-flush complete

Recommended action

1. Follow the instructions in online help.
2. Turn he product off and turn it on.
3. If the error continues, see the Output finishing device service manual for detailed instructions.

66.90.10

Description

Booklet Interlock Switch Error

There are three switches in the Booklet Maker finisher: SW1 (the saddle-guide switch also known as the inlet-door switch), SW3 (the booklet-ejection-door switch), and MS31 (the front-door switch). The Stapler/Stacker finisher only has one switch, MS31 for the front door of the finisher. All three switches detect if the associated door or guide plate is open or closed. Each one of the switches also has a sensor (SW1/PI9, SW3/PI3, and MS31/PI32) that acts as a backup and detects the same information as the switches.

The error occurs when all the doors and guides are closed and there is a mismatch in readings between the sensors and the switches. For example, the front door finisher door is closed, PI32 senses the door is closed, but MS31 senses the door is still open.

Associated finisher door and guide switches and sensors are as follows:

- Saddle-guide switch SW1 and saddle-guide sensor PI9
- Booklet-ejection-door switch SW3 and booklet-ejection-door sensor PI3
- Front-door switch MS31 and front-door sensor PI32

Recommended action

Control panel diagnostics: PI32 (front-door-1 sensor), PI3 (booklet door-1 sensor, also known as booklet-delivery-door sensor), PI9 (front-door-2 sensor, also known as the saddle-guide-door sensor or inlet-door sensor), SW3 (booklet-door 2).

1. Using the diagnostic tests from the product control panel, try to isolate which door or guide and sensor is causing the error.
2. Make sure that the sensors are securely fastened to the chassis.
3. Check the switches and sensors for damage and clean the sensors by gently blowing clean air into the sensor to remove dust and debris.
4. Check the wiring at the switches and sensors.
5. Check the tabs that activate the switches and sensors on the doors and guides for damage. Make sure that the tabs are aligned with the switches and sensors. Replace the doors and guides as necessary.
6. Make sure that the following connectors are fully seated and not damaged:
   - Stack controller PCA
     - J719 (MS31)
     - J707 (PI32)
   - Saddle-stitcher controller PCA
     - J4 (SW1)
     - J10 (PI9)
     - J4 (SW3)
     - J11 (PI3)
7. If the error persists, replace the PCA (stacker controller PCA or saddle-stitcher controller PCA) that is associated with the failed switch/sensor.

66.90.29

Description

Booklet Staple Motor Error (Rear)

The Booklet Maker stitch staplers do not move to different locations in relation to the paper like the main stapler. The only movement is through the movement of the rotary cam located on the stapler unit itself, during the actual stapling of the booklet. The stitch-home-position switch (SW5) is part of the rear-stitch stapler unit and senses the stapler opening and closing during stapling by the motion of

the rotary drive cam. Like SW5, the stitch motor (M6) is also part of the overall stitch stapler unit and replacement requires the replacement of the saddle-stapler assembly.

This error occurs when the rear booklet-maker-stapler stitching-home-position sensor (SW5) does not turn on when the stitch motor (rear) (M6) has driven forward for 0.5 seconds.

This error also occurs when the rear booklet-maker-stapler stitching-home-position sensor (SW5) does not turn off when the stitch motor (rear) (M6) has driven forward for 0.5 seconds.

Recommended action

1. Check the rear-stitch stapler for jammed staples.
2. Clear jammed staples, and then check the staple unit for damage. Retest the stapler.
   - If the error continues, check the following items:
     a. Make sure that HP-approved staples are used.
     b. Replace the staple cartridge with one containing HP-approved staples.
     c. If the error continues, replace the saddle-stapler assembly.
   - If the error persists, but no damage is found, proceed to the next step.
3. Make sure that connector J8 on the saddle-stitcher controller PCA is fully seated and not damaged.
4. Check the wiring at the rear-saddle-stitch stapler and the saddle-stapler assembly for damage and correct seating.
5. Check the connector that the saddle-stitch-stapler assembly engages inside the finisher for damage and foreign material, as well as for correct seating with the saddle-stitch-stapler assembly.
6. If the error persists, replace the saddle-stitcher controller PCA.

66.90.30

Description

Booklet Staple Motor Error (Front)

The Booklet Maker stitch staplers do not move to different locations in relation to the paper like the main stapler. The only movement is through the movement of the rotary cam located on the stapler unit itself, during the actual stapling of the booklet. The stitch-home-position switch (SW7) is part of the front-stitch stapler unit and senses the stapler opening and closing during stapling by the motion of the rotary drive cam. Like SW7, the stitch motor (M7) is also part of the overall stitch stapler unit and replacement requires the replacement of the saddle-stapler assembly.

This error occurs when the front booklet-maker-stapler stitching-home-position sensor (SW7) does not turn on when the stitch motor (front) (M7) has driven forward for 0.5 seconds.

This error also occurs when the front booklet-maker-stapler stitching-home-position sensor (SW7) does not turn off when the stitch motor (front) (M7) has driven forward for 0.5 seconds.

Recommended action

1. Check the front-stitch stapler for jammed staples.
2. Clear jammed staples, and then check the staple unit for damage. Retest the stapler.
   - If the error continues, check the following items:
     a. Make sure that HP-approved staples are used.
     b. Replace the staple cartridge with one containing HP-approved staples.
     c. If the error continues, replace the saddle-stapler assembly.
   - If the error persists, but no damage is found, proceed to the next step.
3. Make sure that connector J8 on the saddle-stitcher controller PCA is fully seated and not damaged.
4. Check the wiring at the front-saddle-stitch stapler and the saddle-stapler assembly for damage and correct seating.
5. Check the connector that the saddle-stitch-stapler assembly engages inside the finisher for damage and foreign material, as well as for correct seating with the saddle-stitch-stapler assembly.
6. If the error persists, replace the saddle-stitcher controller PCA.

66.90.41

Description

Booklet Nip Motor Error

The paper-fold motor (M2), which is located in the booklet making area of the finisher, drives the rotation of the folding rollers to create desired fold in the paper.

The error occurs when the number of pulses by the paper-fold-motor clock sensor (PI4) is less than the expected standard value.

This error also occurs when the status of the paper-fold home-position sensor (PI21) does not change when the paper-fold motor (M2) has driven for 3 seconds.

Recommended action

1. Check the area around the folding rollers for a jam.
2. Test the paper-fold motor M2 using the finisher component test from the product control panel.
   - If the folding rollers rotate correctly, perform the following steps:
     a. Check sensor PI4 and sensor PI21 for damage.
     b. Make sure that the sensor flags are not damaged, move freely, and are correctly aligned with the PI48 and PI21 sensor bodies.
     c. Make sure that the sensors are securely fastened to the chassis.
     d. Carefully clean each sensor body with a clean, lint-free cloth, or gently blow clean air across each sensor to remove dust and debris.

e. Make sure that connector J3 on the saddle-stitcher controller PCA is fully seated and not damaged. Check the wiring at the PI4 sensor.

f. Make sure that connector J18 on the saddle-stitcher controller PCA is fully seated and not damaged. Check the wiring at the PI21 sensor.

g. If the error persists, replace sensor PI4 or PI21.

h. If the error persists, replace the saddle-stitcher controller PCA.

- If the folding rollers do not rotate correctly, perform the following steps:

  a. Check the folding-roller gears and connecting gears between the paper-fold motor M2 and the folding rollers for damage. Replace components as necessary.

  b. Check the folding rollers for wear and damage. Replace components as necessary.

  c. If the error persists, replace the motor-mount assembly.

  NOTE: The motor-mount assembly includes the paper-fold motor M2 and the paper-fold motor-clock sensor PI4.

  d. If the error persists, replace the saddle-stitcher controller PCA.

66.90.42

Description

Booklet Paper Position Select Motor Error

The paper-positioning-plate motor (M4), located in the booklet making area of the finisher, controls the up and down positioning of the stacked paper for stitch stapling and folding.

The error occurs when the paper-positioning-plate home-position sensor (PI7) does not turn on when the paper-positioning-plate motor (M4) has driven for 1500 pulses.

This error also occurs when the paper-positioning-plate home-position sensor (PI7) does not turn off when the paper-positioning-plate motor (M4) has driven for 300 pulses.

Recommended action

Control panel diagnostics: M4-guide plate motor (paper-positioning-plate motor).

1. Test the paper-positioning-plate motor M4 using the finisher component test from the product control panel.

   During the test, observe the movement of the booklet-maker-guide plate, and make sure it is not obstructed or damaged.

2. Remove the booklet maker output bin to gain access to the paper-position-plate home-position sensor PI7 and delivery door.

3. Remove the plate that holds PI7, and then carefully clean the sensor body by gently blowing clean air across the sensor to remove dust and debris.

4. Make sure that the sensor is securely fastened to the plate.

5. Check the wiring at the sensor.

6. If the error persists, replace sensor PI7 and the positioning-plate assembly together.
7. If the error persists, replace the stacker controller PCA.

66.90.43

Description

Booklet Paper Guide Motor Error

The guide motor (M3), located in the booklet-making area of the finisher, controls the position of the guide plate. The guide plate is positioned in front of the folding rollers as the paper stack is being stapled, allowing the bottom edge of the paper to smoothly pass by the folding rollers. When the stacked paper is lowered to the folding position, the guide motor (M3) lowers the guide plate out of the way to allow the paper stack to be pushed into the folding rollers.

This error occurs when the guide-home-position sensor (PI13) does not turn on when the guide motor (M3) has driven for 700 pulses.

This error also occurs when the guide-home-position sensor (PI13) does not turn off when the guide motor (M3) has driven for 50 pulses.

Recommended action

Control panel diagnostics: M3 guide motor.

1. Carefully clean the sensor body by gently blowing clean air across the sensor to remove dust and debris.
2. Make sure that the sensor is securely fastened to the plate.
3. Check the wiring at the sensor.
4. Check sensor PI13 for damage.
5. Check the guide, gears, and gear tracks on the front and rear frame for damage. Replace components as necessary.
6. If the error persists, replace the guide motor M3 and the guide-home-position sensor PI13 together.

66.90.44

Description

Booklet Align Motor Error

The alignment motor (M5), located in the booklet making area of the finisher, drives the two alignment plates that adjust the side edges of the stacked paper so that the sheets of paper in the stack is perfectly aligned with one another.

This error occurs when the aligning-plate home-position sensor (PI5) does not turn on when the aligning-plate motor (M5) has driven for 500 pulses.

This error also occurs when the aligning-plate home-position sensor (PI5) does not turn off when the aligning-plate motor (M5) has driven for 50 pulses.

Recommended action

Observe the alignment plates during a Booklet Maker stacking operation.

If the alignment plates move during the operation, perform the following steps:

1. Check sensor PI5 for damage.
2. Make sure that the sensor flag is not damaged, moves freely, and is correctly aligned with the sensor body.
3. Make sure that the sensor is securely fastened to the plate.
4. Carefully clean the sensor body by gently blowing clean air across the sensors to remove dust and debris.
5. If the alignment plates or the alignment-plates drive gear has been removed or replaced, make sure that the plates are correctly aligned with each other on the drive gear.

If the alignment plates do not move during the operation, perform the following steps:

1. Remove motor M5 and check the gears between the motor and alignment plates for damage. Replace components as necessary.
2. Make sure that connector J7 on the saddle-stitcher controller PCA is fully seated and not damaged.
3. Check the wiring at the M5 motor.
4. If the error persists, replace the alignment motor M5.
5. If the alignment plates or the alignment-plates drive gear has been removed or replaced, make sure that the plates are correctly aligned with each other on the drive gear.

66.90.45

Description

Booklet Push Motor Error

This error occurs when the paper-pushing-plate home-position sensor (PI14) does not turn on when the paper-pushing-plate motor (M8) has driven for 0.3 seconds.

This error can also occur under one of the these conditions:

- When the paper-pushing-plate home-position sensor (PI14) does not turn off when the paper-pushing-plate motor (M8) has driven for 80 ms
- When the paper-pushing-plate leading-edge-position sensor (PI15) does not turn off when the paper-pushing-plate motor (M8) has driven for 80 ms
- When the number of pulses detected by the paper-pushing-plate-motor clock sensor (PI1) is less than the expected standard value
- When the paper-pushing-plate leading-edge-position sensor (PI15) does not turn on when the paper-pushing-plate motor (M8) has driven for 0.3 seconds

Recommended action

1. Open the front finishing door, and then activate the front-door switch (MSW31) and front-door sensor (PI32) so that the finisher will operate with the front door open
2. Turn the engine and finisher power off to clear the error, and then turn the power on.

   WARNING! Operating the finisher with the front door open exposes moving parts that can cause serious injury. Be very careful operating the finisher with the front door open.

3. Observe the paper-pushing plate motor M8 (located in the lower-right front corner of the finisher), associated gears, and the paper-pushing plate for proper motion.
   - If motor M8 does not rotate, replace the motor-mount assembly.

     NOTE: The motor-mount assembly includes the paper-pushing-plate motor M8.

   - If motor M8 does rotate, but the paper-pushing plate does not move or moves erratically, check the drive gears and paper-pushing plate for wear or damage. Replace components as necessary.
   - If motor M8 does rotate and the paper-pushing plate moves correctly, the plate movement sensors might have failed.
     a. Inspect the paper-pushing-plate home-position sensor PI14, pushing-plate leading-edge-position sensor PI15, and paper-pushing-motor clock sensor PI1.
     b. Make sure that the sensors are securely fastened to the chassis.
     c. Check sensor PI4, sensor PI15, and sensor PI1 for damage.
     d. Make sure that connectors J6, J9, and J23 on the saddle-stitcher controller PCA are fully seated and not damaged.
     e. Check the wiring at the sensors.
     f. If the error persists, replace the saddle-stitcher controller PCA.

66.90.49

Description

Booklet Nip Motor Error or Booklet Push Motor Error

Finisher - paper-pushing-plate motor (M8).

Error occurs when the paper-pushing-plate home-position sensor (PI14 or PI 15) does not turn on when the paper-pushing-plate motor (M8) has been driven for 0.3 seconds.

Also occurs when the paper-pushing-plate home-position sensor (PI14 or PI15) does not turn off when the paper-pushing-plate motor (M8) has been driven for 80 ms.

Also occurs when the number of pulses detected by the paper-pushing-plate-motor clock sensor (PI14 or PI15) is less than expected standard value

Recommended action

1. Open the front finishing door, and activate the front-door switch (MSW31) and front-door sensor (PI32) so that the finisher will operate with the front door open. .
2. Turn the engine and finisher power off to clear the error, and then turn the power on.

   WARNING! Operating the finisher with the front door open exposes moving parts that can cause serious injury. Be very careful operating the finisher with the front door open.

3. Use the control-panel menus to begin a booklet making operation. Observe the paper-pushing plate motor M8 (located in the lower-right front corner of the finisher), associated gears, and the paper-pushing plate for proper motion.

   NOTE: The motor-mount assembly includes the paper-pushing-plate motor M8.

4. If motor M8 does rotate but the paper-pushing plate does not move or moves erratically, check the drive gears and paper-pushing plate for wear or damage. Replace components as necessary.
5. If motor M8 does rotate and the paper-pushing plate moves properly, the plate movement sensors might have failed.
6. Inspect the paper-pushing-plate home-position sensor PI14, pushing plate leading-edge-position sensor PI15, and paper-pushing-motor clock sensor PI1.
7. Make sure that the sensors are securely fastened to the chassis.

   Check sensor PI4, sensor PI15, and sensor PI1 for damage.

8. Verify that connectors J6, J9, and J23 on the saddle-stitcher controller PCA are fully seated and not damaged. Check the wiring at the sensors
9. ONLY if the error persists and none of the previous steps correct the problem, replace the saddle-stitcher controller PCA.

66.90.50

Description

Booklet-CPU sequence error

Recommended action

1. Follow the instructions in the online help.
2. Turn the product off, and then on.
3. If the error persists, see the output finishing device service manual for detailed instructions.

69.11.YZ

Description

There is a duplexer error.

Recommended action

1. Turn the product off, and then on.
2. If the error persists, replace the duplexer.

70.XX.YY Error Messages

70.00.00 Error To continue turn off then on

Description

The product experienced a DC controller failure.

Recommended action

1. Turn the product off, and then on.
2. If the error persists, replace the DC controller.

80.XX.YY, 82.XX.YY Error Messages

80.0X.YY Embedded Jetdirect Error

Description

An Embedded HP JetDirect print server critical error has occurred.

- 80.01.80: (event log) No heartbeat
- 80.01.81: (event log) Reclaim timeout
- 80.01.82: (event log) Invalid data length
- 80.01.8B: (event log) Invalid max outstanding packet header field
- 80.01.8C: (event log) Invalid channel mapping response
- 80.03.01: (event log) No PGP buffers
- 80.03.02: (event log) Channel table full
- 80.03.03: (event log) Producer index not reset
- 80.03.04: (event log) Consumer index not reset
- 80.03.05: (event log) Queue position size too small
- 80.03.06: (event log) Transport overflow
- 80.03.07: (event log) No overflow packets
- 80.03.08: (event log) Invalid identify response
- 80.03.09: (event log) Invalid channel map return status
- 80.03.10: (event log) Invalid reclaim return status
- 80.03.12: (event log) Datagram invalid buffer
- 80.03.13: (event log) Max stream channels

- **80.03.14**: (event log) Max datagram channels
- **80.03.15**: (event log) Card reset failed
- **80.03.16**: (event log) Self-test failure
- **80.03.17**: (event log) Unknown PGP packet
- **80.03.18**: (event log) Duplicate I/O channel

Recommended action

1. Turn the product off, and then on.
2. Remove the RJ45 cable.
3. Turn the product off, and then on.
4. Reconnect the RJ45 cable.
5. If the error persists, replace the formatter.

82.73.46, 82.73.47

Description

A hard disk or compact flash disk cleaning failed. This error is usually caused by a failure of the disk hardware.

Recommended action

1. Turn the product off, and then on.
2. Use the **Clean Disk** item in the **Preboot** menu.
3. Reload the firmware.

98.0X.0Y Error Messages

98.00.01 or 98.01.00 Corrupt data in firmware volume

Description

Data corrupt has occurred in the firmware volume.

Recommended action

1. Turn the product off, and then on.
2. Use the **Clean Disk** item in the **Preboot** menu.
3. Reload the firmware.

98.00.02 Corrupt data in the solutions volume

Description

Data corrupt has occurred in the solutions volume.

Recommended action

1. Turn the product off, and then on.
2. Use the **Clean Disk** item in the **Preboot** menu.
3. Reload the firmware.

98.00.03 Corrupt data in the configuration volume

Description

Data corrupt has occurred in the configuration volume.

Recommended action

1. Turn the product off, and then on.
2. Download the firmware again, and then attempt the upgrade again.
3. Use the **Clean Disk** item in the **Preboot** menu.
4. Reload the firmware.

98.00.04 Corrupt data in the job data volume

Description

Data corrupt has occurred in the job data volume.

Recommended action

1. Turn the product off, and then on.
2. Rerun the file erase function.

99.XX.YY Error Messages

99.00.01 Upgrade not performed file is corrupt

Description

A remote firmware upgrade (RFU) was not performed.

This is a CRC error in the firmware image (bad image).

Recommended action

Download the RFU file, and then attempt the upgrade again.

99.00.02 Upgrade not performed timeout during receive

Description

A remote firmware upgrade (RFU) was not performed.

The issue is an I/O timeout when reading the header number and size. It indicates a problem with the network environment, not the product.

Recommended action

The most common cause is an issue with the network environment.

Make sure that there is a good network connection to the product, and then attempt the firmware upgrade again, or upgrade using the USB walk-up port.

99.00.03 Upgrade not performed error writing to disk

Description

A remote firmware upgrade (RFU) was not performed.

This is a disk error. It might indicate a problem or a hard disk failure. It might be necessary to check the connection to the hard disk or replace the hard disk.

Recommended action

1. Download the RFU file, and then attempt the upgrade again.
2. If the error persists, run the **Clean Disk** process from the **Preboot** menu.

   You will need to download the firmware from the **Preboot** menu.
3. If the error persists, replace the hard disk.

99.00.04 Upgrade not performed timeout during receive

Description

A remote firmware upgrade (RFU) was not performed.

The issue is an I/O timeout when reading the header.

Recommended action

The most common cause is an issue with the network environment.

Make sure that there is a good network connection to the product, and then attempt the firmware upgrade again, or upgrade using the USB walk-up port.

99.00.05 Upgrade not performed timeout during receive

Description

A remote firmware upgrade (RFU) was not performed.

The issue is an I/O timeout when reading image data.

Recommended action

The most common cause is an issue with the network environment.

Make sure that there is a good network connection to the product, and then attempt the firmware upgrade again, or upgrade using the USB walk-up port.

99.00.06 Upgrade not performed error reading upgrade

Description

A remote firmware upgrade (RFU) was not performed.

The issue is an unexpected read error when reading the header number and size.

Recommended action

1. Download the RFU file, and then attempt the upgrade again.
2. If the error persists, replace the hard disk.

99.00.07 Upgrade not performed error reading upgrade

Description

A remote firmware upgrade (RFU) was not performed.

The issue is an unexpected read error when reading the rest of the header.

Recommended action

1. Download the RFU file, and then attempt the upgrade again.
2. If the error persists, replace the hard disk.

99.00.08 Upgrade not performed error reading upgrade

Description

A remote firmware upgrade (RFU) was not performed.

The issue is an unexpected read error when reading image data.

Recommended action

1. Download the RFU file, and then attempt the upgrade again.
2. If the error persists, replace the hard disk.

99.00.09 Upgrade canceled by user

Description

A remote firmware upgrade (RFU) was not performed.

The RFU was canceled by the user.

Recommended action

Resend the RFU.

99.00.10 Upgrade canceled by user

Description

A remote firmware upgrade (RFU) was not performed.

The RFU was canceled by the user when reading the header number and size.

Recommended action

Resend the RFU.

99.00.11 Upgrade canceled by user

Description

A remote firmware upgrade (RFU) was not performed.

The RFU was canceled by the user when reading the rest of the header.

Recommended action

Resend the RFU.

99.00.12 Upgrade not performed the file is invalid

Description

A remote firmware upgrade (RFU) was not performed.

The header number is 1, but the header size does not match version 1 size.

Recommended action

Download the RFU file again.

Make sure that you download the file for the correct product model, and then resend the RFU.

99.00.13 Upgrade not performed the file is invalid

Description

A remote firmware upgrade (RFU) was not performed.

The header number is 2, but the header size does not match version 2 size.

Recommended action

Download the RFU file again.

Make sure that you download the file for the correct product model, and then resend the RFU.

99.00.14 Upgrade not performed the file is invalid

Description

A remote firmware upgrade (RFU) was not performed.

The file is invalid.

Recommended action

Download the RFU file again.

Make sure that you download the file for the correct product model, and then resend the RFU.

99.00.2X

Description

There is a compatibility issue with the firmware. The specific message varies depending on the cause, but the solution for each message is the same.

- **99.00.20** (event log)

  The bundle is not for this product.

- **99.00.21** (event log)

  The bundle is not signed with the correct signature, or the signature is invalid.

- **99.00.22** (event log)

  The bundle header version is not supported by this firmware.

- **99.00.23** (event log)

  The package header version is not supported by this firmware.

- **99.00.24** (event log)

  The format of the bundle is invalid.

- **99.00.25** (event log)

  The format of the package is invalid.

- **99.00.26** (event log)

  A CRC32 check did not pass.

- **99.00.27** (event log)

  An I/O error occurred while downloading the bundle.

Recommended action

Download the correct firmware file from www.hp.com, and then resend the firmware upgrade.

99.00.27 only:

1. Turn the product off, and then on.
2. Resend the firmware upgrade.
3. If the error persists, try installing the upgrade by another method (USB or Embedded Web Server).

99.01.XX

Description

A firmware install error has occurred. The specific message varies depending on the cause, but the solution for each message is the same.

- **99.01.00**
- **99.01.10**
- **99.01.20**
- **99.01.21**

Recommended action

Reload the firmware.

99.02.01

Description

Firmware installation was successful.

Recommended action

No action necessary.

99.02.09

Description

Firmware upgrade cancelled by user.

Recommended action

No action necessary.

99.09.60 Unsupported disk

Description

This is a **Preboot** menu error.

The hard disk currently installed is not recognized or supported by the product.

Recommended action

Install the correct hard disk for this product.

99.09.61 Unsupported disk

Description

This is a **Preboot** menu error.

The installed disk is installed in a product configured for an encrypted hard disk..

Recommended action

Access the **Preboot** menu, and then select **Lock Disk** to lock the disk.

99.09.62 Unknown disk

Description

This error indicates that there is an encryption mismatch between the HDD and the formatter. This typically happens because an HDD was swapped into a device from another device.

Recommended action

Install a new disk or use the **Preboot** menu unlock the disk.

If a disk is to be reused in a different product, execute the **Clean Disk** procedure from the **Preboot**, and then reload the firmware and lock the disk.

99.09.63 Incorrect disk

Description

This error indicates that the expected encrypted HDD is not present.

This is expected behavior when installing a new HDD in a device where the previous HDD was encrypted.

Recommended action

Follow the procedure to load firmware on a new hard disk, and then lock the disk to this product.

99.09.64 Disk malfunction

Description

A fatal hard disk failure has occurred.

Recommended action

Replace the hard disk.

99.09.65 Disk data error

Description

Disk data corruption has occurred.

Recommended action

Use the **Clean Disk** procedure from the **Preboot** menu, and then resend the RFU.

99.09.66 No disk installed

Description

A disk drive is not installed in the product.

Recommended action

1. Install a compatible hard disk drive.
2. If a compatible hard disk is installed, reseat the hard disk to make sure that it is connected correctly.
3. If the error persists, replace the hard disk drive.

99.09.67 Disk is not bootable please download firmware

Description

This is an error indicating that there is no firmware installed on the disk. This is usually the result of installing a new disk or performing a **Clean Disk** operation from the **Preboot** menu.

Recommended action

1. Press any button to continue to the main **Preboot** menu.
2. Press the Help button to see the help text for the error.

3. Select the **Administration** menu.

NOTE: If there is a password assigned to the Administrator, a prompt to enter the product displays. Enter the password to proceed.

4. Select the **Download** item, and then download the latest firmware.

The user can now download a new firmware bundle to the product.

99.09.67 Disk is not bootable please download firmware

Description

This is an error indicating that there is no firmware installed on the disk. This is usually the result of installing a new disk or performing a **Clean Disk** operation from the **Preboot** menu.

Recommended action

1. Press any button to continue to the main **Preboot** menu.
2. Press the Help button to see the help text for the error.
3. Select the **Administration** menu.

NOTE: If there is a password assigned to the Administrator, a prompt to enter the product displays. Enter the password to proceed.

4. Select the **Download** item, and then download the latest firmware.

The user can now download a new firmware bundle to the product.

99.XX.YY

Description

A message of this form indicates a firmware installation error.

Recommended action

Reload the firmware.

Alpha Error Messages

<binname> full Remove all paper from bin

Description

The specified output bin is full.

Recommended action

Empty the bin to continue printing.

<Supply> low OR Supplies low

Description

The product indicates when a supply level, or more than one supply, is low. Actual toner cartridge life might vary. You do not need to replace the toner cartridge at this time unless print quality is no longer acceptable.

When multiple supplies are low, more than one event code is recorded.

- **10.00.60** : (event code) Black toner cartridge
- **10.23.60** : (event code) Fuser Kit

Recommended action

If print quality is no longer acceptable, replace the supply.

HP recommends that the customer have a replacement supply available to install when print quality is no longer acceptable.

NOTE: When an HP supply has reached its approximate end of life, the HP Premium Protection Warrant ends.

<Supply> very low OR Supplies very low

Description

The product indicates when a supply level, or more than one supply, is low. Actual toner cartridge life might vary. You do not need to replace the toner cartridge at this time unless print quality is no longer acceptable.

When multiple supplies are low, more than one event code is recorded.

- **10.00.70** : (event code) Black toner cartridge
- **10.23.70** : (event code) Fuser Kit

Recommended action

If print quality is no longer acceptable, replace the supply.

HP recommends that the customer have a replacement supply available to install when print quality is no longer acceptable.

NOTE: When an HP supply has reached its approximate end of life, the HP Premium Protection Warrant ends.

<Tray X> lifting

Description

The product is in the process of lifting paper in the indicated tray.

- **X = 2**: Tray 2
- **X = 3**: Tray 3
- **X = 4**: Tray 4
- **X = 5**: Tray 5

Recommended action

No action necessary.

[File System] device failure To clear touch “OK”

Description

The specified device has failed.

Recommended action

Touch the OK button to clear the error.

[File System] file operation failure To clear touch “OK”

Description

A PJL file system command attempted to perform an invalid operation.

Recommended action

Touch the OK button to clear the error.

[File System] file system is full To clear touch “OK”

Description

A PJL file system command could not store something on the file system because the file system is full.

Recommended action

Touch the OK button to clear the error.

[File System] is not initialized

Description

This file-storage component must be initialized before use.

Recommended action

Use the HP Embedded Web Server or HP Web Jetadmin to initialize the file system.

[File System] is write protected

Description

The file system device is protected and no new files can be written to it.

Recommended action

Touch the OK button to clear the error.

Accept bad signature

Description

The product is performing a remote firmware upgrade and the code signature is invalid.

Recommended action

Download the correct firmware upgrade file for the product, and then reinstall the upgrade. See the product user guide for more information.

ADF not detected

Description

The ADF was not detected when the product initialized.

Recommended action

Make sure that the document feeder cables are connected and fully seated.

Bad duplexer connection

Description

This message indicates that the duplexer is not connected properly or has been pulled out and must be reinserted before printing can continue.

Recommended action

1. Turn the product off, and then on.
2. Reconnect the duplexer.
3. If the error persists, replace the duplexer.

Bad optional tray connection

Description

The optional tray is not connected, not connected correctly, or a connection is not working correctly.

Recommended action

1. Turn the product off.
2. Remove and then reinstall the optional tray.
3. Reconnect the connectors for the tray.
4. Turn the product on.
5. If the error persists, replace the connector for the tray.

Calibration reset pending

Description

A calibration reset occurs when all jobs are processed.

Recommended action

To begin the reset sooner, cancel all jobs by pressing the Stop button .

Canceling

Description

The product is canceling the current job.

Recommended action

No action necessary.

Canceling...<jobname>

Description

The product is canceling the current job <jobname>.

Recommended action

No action necessary.

Cartridge Low

Description

This message displays even though the toner cartridge is new.

Recommended action

1. Remove, and then reinstall the toner cartridge.
2. Make sure a genuine HP supply is used.
3. If the error persists, replace the toner cartridge.

Cartridge Memory Abnormal

Description

This message displays even though the toner cartridge is new.

Recommended action

1. Remove, and then reinstall the toner cartridge.
2. Reconnect connector (J305) on the DC controller PCA.
3. If the error persists, replace the toner cartridge.

Cartridge Out

Description

This message displays even though the toner cartridge is new.

Recommended action

1. Remove, and then reinstall the toner cartridge.
2. Make sure a genuine HP supply is used.
3. If the error persists, replace the toner cartridge.

Checking engine

Description

The product is conducting an internal test.

Recommended action

No action necessary.

Checking paper path

Description

The product is checking for possible paper jams.

Recommended action

No action necessary.

Chosen personality not available To continue, touch “OK”

Description

A print job requested a product language (personality) that is not available for this product. The job will not print and will be cleared from memory.

Recommended action

Print the job by using a print driver for a different language, or add the requested language to the product (if possible). To see a list of available personalities, print a configuration page.

Clearing event log

Description

This message is displayed while the event log is cleared. The product exits the menus when the event log has been cleared.

Recommended action

No action necessary.

Clearing paper path

Description

The product is attempting to eject jammed paper.

Media is detected in the paper path. The product will attempt to eject it.

Recommended action

No action necessary. Check the progress at the bottom of the control panel display.

If a jam is not cleared, remove the media.

Close Front door

Description

The front door of the product is open.

Recommended action

1. Close the door.
2. Run the switch test in the sensor monitor mode to make sure that the front door open detection switch is functioning correctly. If it is not, replace the interlock switch assembly.
3. Reconnect the connector (J3) of the front door open detection switch and connector (J302) on the DC controller PCA.
4. Check the sensor flag on the front door open detection sensor. If the flag is damaged, replace the front door assembly.

Close Left door

Description

The left door of the product is open.

Recommended action

1. Close the door.
2. Run the switch test in the sensor monitor mode to make sure that the left door open detection switch is functioning correctly. If it is not, replace the interlock switch assembly.
3. Reconnect the connector (J10) of the left door open detection switch and connector (J302) on the DC controller PCA.
4. Check the sensor flag on the left door open detection sensor. If the flag is damaged, replace the left door assembly.

Close Lower Right door

Description

The optional paper feeder right door is open.

Recommended action

1. Close the door.
2. Run the switch test in the sensor monitor mode to make sure that the right door open detection switch is functioning correctly. If it is not, replace the right door open detection switch assembly.
3. Reconnect the connector (J2) of the right door open detection switch and connector (J209) on the DC controller PCA.
4. Check the sensor flag on the right door open detection sensor. If the flag is damaged, replace the right door assembly.

Close stapler/stacker multi bin mailbox door

Description

This message displays even though the stapler/stacker multi bin mailbox door is closed.

Recommended action

1. Reconnect the connector (J465) on the stapler/stacker controller PCA.
2. Check the stapler/stacker door sensor flag. If the flag is damaged, replace the sensor flag.

Close top cover

Description

This message displays even though the top cover is closed.

Recommended action

1. Use the cartridge door (top cover) switch (SW101) test in the manual sensor test to make sure that the switch is functioning correctly. if the switch fails the test, replace the switch.
2. Reconnect the connector (J78) on the DC controller PCA.
3. If the error persists, replace the cartridge door (top cover) switch (SW101).

Close Upper Right Door

Description

The upper right door is open or the message displays even though the upper right door is closed.

Recommended action

1. Close the door.
2. Run the switch test in the sensor monitor mode to make sure that the right door open detection switch is functioning correctly. If it is not, replace the interlock switch assembly.
3. Reconnect the connector (J2) of the right door open detection switch and connector (J302) on the DC controller PCA.
4. Check the sensor flag on the right door open detection sensor. If the flag is damaged, replace the right door assembly.

Cooling device

Description

The product is cooling.

Recommended action

No action necessary.

Data received To print last page press “OK”

Description

The product is waiting for the command to print the last page.

Recommended action

Touch the OK button to print the last page of the job.

Different paper sizes in job

Description

A job being sent to the HCO with a command for stapling or booklet making contains multiple sizes of media.

Recommended action

Send the job in **Stacker** mode.

Change the media size of the pages.

EIO <X> disk initializing

Description

The specified EIO disk device is initializing.

Recommended action

No action necessary.

EIO <X> disk not functional

Description

The specified EIO disk device is initializing. For example, if X = 1, the disk in slot 1 is not functional.

Recommended action

1. Turn the product off, and then on.
2. If the error persists, turn the product off, and then remove and reinstall the disk.

EIO <X> disk spinning up

Description

The EIO disk in slot <X> is spinning up its platter. Jobs that require disk access must wait.

For example, if X = 1, the disk in slot 1 is spinning up.

Recommended action

No action necessary.

Event log is empty

Description

No product events are in the log.

Recommended action

No action necessary.

Expected drive missing

Description

The product cannot find the encrypted hard drive.

Recommended action

Install the encrypted hard drive.

External device initializing

Description

An external device is initializing.

Recommended action

No action necessary.

Fax is disabled — ignoring call

Description

The product received a call, but the fax feature was not configured with the required settings (country/region, date/time, company name, fax number, etc.).

Recommended action

Use the **Administration** menu to configure the required fax settings.

FIM Load Error Send full FIM on <X> port

Description

The product displays this message before the firmware is loaded at startup if an error has occurred during a firmware upgrade.

Recommended action

Resend the firmware upgrade.

Flatbed cover open or Close Flatbed cover

Description

The platen glass cover is open or the open/closed sensor is not functioning correctly.

Recommended action

1. Close the flatbed cover.
2. If the error persists, perform a Sensors diagnostic in the **Diagnostics** menu on the product control panel to test the flatbed open/closed sensor.
3. Clean, adjust, or replace the sensor as needed.

Fuser Kit low

Description

10.23.60 (event code)

The product indicates when a supply is low.

Recommended action

Replace the fuser.

After replacing the fuser, reset the fuser page counter by selecting **New Fuser Kit** in the **Reset Supplies** sub-menu.

Fuser Kit very low To continue, touch “OK”

Description

10.23.70 (event code)

The product indicates when a supply is very low.

After an HP supply has reached the very low threshold, the HP premium protection warranty for that supply has ended.

Recommended action

Replace the fuser.

After replacing the fuser, reset the fuser page counter by selecting **New Fuser Kit** in the **Reset Supplies** sub-menu.

Gateways failed

Description

There is an incorrect gateways configuration.

Recommended action

Use the **EIO <X> Jetdirect** menu to configure the default gateway.

Gateways OK

Description

The gateways are configured correctly.

Recommended action

No action necessary.

Genuine HP cartridge installed

Description

A new HP toner cartridge has been installed. The message appears for about 6 seconds before the product returns to the Ready state.

Recommended action

No action necessary.

Genuine HP supply installed

Description

10.XX.40 (event code)

A new genuine HP toner cartridge has been installed.

Recommended action

Touch the Hide button to remove this message.

HP Secure hard drive disabled

Description

The drive has been encrypted for another product.

Recommended action

Remove the drive or use the HP Embedded Web Server for more information.

Incompatible <Supply>

Description

The indicated supply is not compatible with this product.

- **10.00.35**: (event code) Black toner cartridge
- **10.23.35**: (event code) Fuser kit

Recommended action

Replace the supply with one that is designed for this product.

Incompatible supplies

Description

Toner cartridges or other supply items are installed that were not designed for this product. The product cannot print with these supplies installed.

Event codes are supply specific.

Recommended action

Touch the OK button to identify the incompatible supplies.

Replace the supplies with those that are designed for this product.

Initializing...

Description

The product is starting.

Recommended action

No action necessary.

Install fuser unit

Description

The fuser has been removed or installed incorrectly.

Recommended action

WARNING! The fuser can be hot while the product is in use. Turn the product off, and then wait for the fuser to cool before handling it.

1. Remove the output bin or stapler/stacker.
2. Remove the fuser.
3. Reinstall the fuser.

Install supply

Description

A supply item is either not installed or installed incorrectly.

- **10.00.15**: (event code) Black toner cartridge

Recommended action

Install the supply item or make sure that the installed supply item is fully seated.

Internal disk device failure To clear touch “OK”

Description

82.0X.YY (event code)

The internal disk failed.

Recommended action

1. Touch the OK button to clear the error.
2. If the error persists, turn off the product, and then remove and reinstall the hard drive.
3. Turn on the product.
4. If the error persists, replace the internal hard drive.

Internal disk file operation failed

Description

A PJL system command attempted to perform an invalid operation, such as downloading a file to a nonexistent directory.

Recommended action

Touch the OK button to clear the error.

Internal disk file system is full

Description

A PJL system command attempted to write data to the internal disk, but failed because the disk is full.

Recommended action

Touch the OK button to clear the error.

Internal disk is write protected

Description

The internal disk is write protected and no new files can be written to it.

Recommended action

Touch the OK button to clear the error.

Internal disk not found

Description

The internal disk was not found at start up.

Recommended action

Turn the product off, and then on.

Internal disk not functional

Description

82.0X.YY (event code)

The internal hard drive is not functioning correctly

Recommended action

1. Turn off the product, and then remove and reinstall the hard drive.
2. Turn on the product.
3. If the error persists, replace the internal hard drive.

Internal disk not initialized

Description

The file system on the internal disk must be initialized before it can be used.

Recommended action

Initialize the file system on the internal disk.

Internal disk spinning up

Description

The internal disk device is spinning up its platter. Jobs that require disk access must wait.

Recommended action

No action is necessary.

Jam in document feeder

Description

A document feeder jam has occurred.

Recommended action

Clear the jam. See the clear jams section in the service manual.

Job not stapled due to mixed sizes

Description

This message displays when the job to staple has more than one paper size (paper width).

Recommended action

Paper with different widths cannot be stapled. Use the same width paper for the entire print job.

Load Tray <X>: [Type], [Size] To use another tray, press “OK”

Description

This message displays when the indicated tray is selected, but is not loaded, and other paper trays are available for use.

It also displays when the tray is configured for a different paper type or size than the print job requires.

Recommended action

1. Load the correct paper in the tray.
2. If prompted, confirm the size and type of paper loaded.
3. Otherwise, press the OK button to select another tray.
4. If error persists, use the cassette media present sensor test in the Tray/bin manual sensor test to verify that the sensor is functioning correctly.
5. Make sure that the sensor flag on the media presence sensor is not damaged and moves freely.

Loading program <XX>

Description

Programs and fonts can be stored on the product’s file system and are loaded into RAM when the product is turned on. The number <XX> specifies a sequence number indicating the current program being loaded.

Recommended action

No action necessary.

NOTE: Do not turn the product off.

Lower left booklet bin full

Description

The booklet bin is full.

Recommended action

Remove media from the bin to continue.

Manually feed output stack Then touch "OK" to print second side

Description

The product has printed the first side of a manual duplex job and is waiting for the user to insert the output stack to print the second side.

Recommended action

1. Maintaining the same orientation, remove the pages from the output bin.
2. Flip the document printed side up.
3. Load the document in Tray 1.
4. Touch the OK button to print the second side of the job.

Manually feed: <Type><Size> To use another tray, press “OK”

Description

This message displays when manual feed is selected, Tray 1 is loaded, and other trays are available.

Recommended action

1. Load tray with the requested paper.
2. If paper is already in tray, press the Help button to exit the message, and then press the OK button to print.
3. To use another tray, clear paper from Tray 1, press the Help button to exit the message, and then press the OK button.

Moving solenoid

Description

The solenoid is moving as part of a component test.

Recommended action

No action necessary.

To exit, press the Stop button ⊗.

Moving solenoid and motor

Description

The solenoid and a motor are moving as part of a component test.

Recommended action

No action necessary.

To exit, press the Stop button ⊗.

No job to cancel

Description

The user pressed the Stop button ⊗, but the product is not actively processing any jobs.

Recommended action

No action necessary.

Non HP Supply Installed

Description

A non-HP supply is detected.

This message displays for 30 seconds, and then the product returns to a Ready state.

The product does not provide supply status messages for non-HP supplies.

Recommended action

Press OK to continue.

If you believe you purchased a genuine HP supply, go to www.hp.com/go/anticounterfeit.

Output Bin Full

Description

This message displays even though the output bin is not full.

Recommended action

1. Make sure that the output bin sensor flag is not damaged and can move freely. If the flag is damaged, replace the flag.
2. Use the output bin full sensor (PS1452) test in the Manual sensor test to test the sensor. If it does not respond, replace the output bin full sensor (PS1452).
3. Reconnect connector (J205) on the DC controller PCA.

Output Device detached

Description

An output device is recognized on the product, but not fully attached.

Recommended action

Realign and reattach the output device.

Paused...

Description

The product is paused and there are no error messages pending at the display. The I/O continues receiving data until memory is full.

Recommended action

Press the Stop button ⊗.

Performing Paper Path Test…

Description

The product is performing a paper-path test.

Recommended action

No action necessary.

Please Wait...

Description

The product is in the process of clearing data.

Recommended action

No action necessary.

Printing Configuration...

Description

The product is printing the Configuration page.

Recommended action

No action necessary.

Printing Event Log...

Description

The product is printing the Event Log page.

Recommended action

No action necessary.

Printing File Directory...

Description

The product is printing the File Directory pages.

Recommended action

No action necessary.

Printing Font List...

Description

The product is printing the Font List pages.

Recommended action

No action necessary.

Printing Fuser Test Page...

Description

The product is printing the Fuser Test page.

Recommended action

No action necessary.

Printing Help Page...

Description

The product is printing the Help page.

Recommended action

No action necessary.

Printing Menu Map...

Description

The product is printing the Menu Map pages.

Recommended action

No action necessary.

Printing stopped

Description

Time expired on the Print/Stop test.

Recommended action

Touch the OK button to continue.

Printing Supplies Status Page...

Description

The product is printing the Supplies Status page.

Recommended action

No action necessary.

Printing Usage Page...

Description

The product is printing the Usage page.

Recommended action

No action necessary.

Printing…engine test

Description

The product is printing an engine test page.

Recommended action

No action necessary.

Processing job from tray <X>...Do not grab paper until job completes

Description

The product is actively processing a job from the designated tray.

Recommended action

No action necessary.

Processing...

Description

The product is currently processing a job, but is not yet picking pages. When paper motion begins, this message is replaced by a message that indicates the tray the job is using.

Recommended action

No action necessary.

Processing...copy <X> of <Y>

Description

The product is currently processing or printing collated copies. The message indicates that copy number <X> of total copies <Y> is currently being processed.

Recommended action

No action necessary.

RAM disk device failure To clear touch “OK”

Description

The specified device failed.

Recommended action

Touch the OK button to clear the error.

RAM disk file operation failed To clear touch “OK”

Description

A PJL command was received that attempted to perform an invalid operation, such as downloading a file to a nonexistent directory.

Recommended action

Touch the OK button to clear the error.

RAM disk file system is full To clear touch “OK”

Description

The hard disk is full.

Recommended action

Touch the OK button to clear the error.

RAM disk is write protected To clear touch “OK”

Description

The RAM device is write protected and no new files can be written to it.

Recommended action

Touch the OK button to clear the error.

RAM disk not initialized

Description

The file system on the RAM disk must be initialized before it can be used.

Recommended action

Initialize the file system on the RAM disk.

Ready

Description

The product is online and ready for data. No status or product attendance messages are pending at the display.

Recommended action

No action necessary.

Ready <IP Address>

Description

The product is online and ready for data. No status or product attendance messages are pending at the display. The product IP address displays.

Recommended action

No action necessary.

Receiving Upgrade

Description

The product is receiving a firmware upgrade.

Recommended action

Do not turn the product off until it reaches the Ready state.

Reinsert duplexer

Description

The product is not detecting the duplexer.

Recommended action

1. Remove and reinstall the duplexer.
2. Turn the product off, and then on.
3. If the error persists, replace the duplexer.

Remove one toner cartridge

Description

The product is testing the toner-cartridge motor.

Recommended action

To perform the test, remove the toner cartridge from the product.

To cancel, press the Stop button .

Remove USB accessory

Description

This message displays when an unsupported USB device is inserted into a host USB port on the product.

Recommended action

Remove the unsupported USB device.

Replace <Supply>

Description

This alert displays only if the product is configured to stop when a supply reaches the very low threshold. The product indicates when a supply level is at its estimated end of life. The actual life remaining might be different than estimated.

The supply does not need to be replaced now unless the print quality is no longer acceptable. HP recommends that the customer have a replacement supply available to install when print quality is no longer acceptable.

The product can be configured to stop when the supply level is very low. The supply might still be able to produce acceptable print quality.

When an HP supply has reached its approximated end of life, the HP Premium Protection Warranty on that supply ends.

- **10.00.70** : (event code) Black toner cartridge
- **10.23.70** : (event code) Fuser Kit

Recommended action

Replace the specified supply.

Or, configure the product to continue printing using the **Manage Supplies** menu on the product control panel.

Replace supplies

Description

This alert displays only if the product is configured to stop when a supply reaches the very low threshold. The product indicates when a supply level is at its estimated end of life. The actual life remaining might be different than estimated.

The supply does not need to be replaced now unless the print quality is no longer acceptable. HP recommends that the customer have a replacement supply available to install when print quality is no longer acceptable.

The product can be configured to stop when the supply level is very low. The supply might still be able to produce acceptable print quality.

When an HP supply has reached its approximated end of life, the HP Premium Protection Warranty on that supply ends.

- **10.00.70** : (event code) Black toner cartridge
- **10.23.70** : (event code) Fuser Kit

Recommended action

Replace the specified supply.

Or, configure the product to continue printing using the **Manage Supplies** menu on the product control panel.

Resend external accessory firmware

Description

An external accessory requires a firmware upgrade. Printing can continue, but jams might occur if the job uses the external accessory.

Recommended action

Perform a firmware upgrade.

Resend Upgrade

Description

A firmware upgrade did not complete successfully.

Recommended action

Upgrade the firmware again.

Restore Factory Settings

Description

The product is restoring factory settings.

Recommended action

No action necessary.

ROM disk device failed To clear touch “OK”

Description

The specified device failed.

Recommended action

Touch the OK button to clear the error.

ROM disk file operation failed To clear touch “OK”

Description

A PJL command was received that attempted to perform an invalid operation, such as downloading a file to a nonexistent directory.

Recommended action

Touch the OK button to clear the error.

ROM disk file system is full To clear touch “OK”

Description

The hard disk is full.

Recommended action

Touch the OK button to clear the error.

ROM disk is write protected To clear touch “OK”

Description

The ROM device is write protected and no new files can be written to it.

Recommended action

Touch the OK button to clear the error.

ROM disk not initialized To clear touch “OK”

Description

The file system on the ROM disk must be initialized before it can be used.

Recommended action

Initialize the file system on the ROM disk.

Rotating Motor

Description

The product is executing a component test and the component selected is a motor.

Recommended action

Press the Stop button when ready to stop this test or exit.

Size mismatch in Tray <X>

Description

The paper in the listed tray does not match the size specified for that tray.

Recommended action

1. Load the correct paper.
2. Make sure that the paper is positioned correctly.
3. Close the tray, and then make sure that the control panel lists the correct size and type for the specified tray.
4. If necessary, use the control panel menus to reconfigure the size and type settings for the specified tray.
5. If error persists, use the Tray/Bin manual sensor test to test the switch.

Sleep mode on

Description

The product is in sleep mode. Pressing a control panel button, receiving of a print job, or an error condition clears this message.

Recommended action

No action necessary.

Staple Cartridge 2 and 3 very low (warning)

Description

The specified staple cartridge is at end of life.

After an HP supply has reached the very low threshold, the HP premium protection warranty ends.

Recommended action

Replace the staple cartridge.

Staple Cartridge <X> low (warning)

Description

The specified staple cartridge is at end of life.

After an HP supply has reached the very low threshold, the HP premium protection warranty ends.

Recommended action

Replace the staple cartridge.

Staple Cartridge low

Description

The product indicates when a supply level is low. 20 to 50 staples remain in the cartridge.

Recommended action

Replace the staple cartridge.

Stapler/Stacker staple jam

Description

There is a stapler/stacker jam.

Recommended action

Clear the jam. See the clear jams section in the service manual.

Supplies low

Description

Multiple supplies on the product have reached the user defined low threshold.

Recommended action

Replace the supply when print quality is no longer acceptable.

Supply Memory Warning

Description

The product cannot read or write to the e-label or the e-label is missing.

Recommended action

No action necessary.

The unit has corrupt data

Description

Data corruption has occurred in the firmware volume.

- **98.00.01**: Corrupt data in the firmware volume
- **98.00.02**: Corrupt data in the solutions volume
- **98.00.03**: Corrupt data in the configuration volume
- **98.00.04**: Corrupt data in the job data volume

Recommended action

For **98.00.01**, **98.00.02**, and **98.00.03**, perform the following steps:

1. Turn the product off, and then on.
2. Use the **Clean Disk** item in the **Preboot** menu.
3. Reload the firmware.

For **98.00.04**, perform the following steps:

1. Turn the product off, and then on.
2. Run the file erase function.

Too many pages in job to staple

Description

The job contains more pages than can be stapled.

Recommended action

Send the job to the stacker bin or make the job page count smaller.

Too many pages to make booklet

Description

The job contains more pages than can be assembled in the booklet bin.

Recommended action

Send the job to the stacker bin or make the job page count smaller.

Tray <X> [type] [size]

Description

The media in the specified tray is detected as the specified size and type.

The custom switch was not changed.

Recommended action

If the media is a custom size or type, change the custom switch accordingly.

Tray <X> empty: [Type], [Size]

Description

The specified tray is empty and the current job does not need this tray to print.

- X = 1: Tray 1
- X = 2: Tray 2
- X = 3: Tray 3
- X = 4: Tray 4
- X = 5: Tray 5

Recommended action

Refill the tray at a convenient time.

This could be a false message. If the tray is loaded without removing the shipping lock, the product does not sense that the paper is loaded. Remove the shipping lock, and then load the tray.

Tray <X> lifting

Description

The product is in the process of lifting paper in the indicated tray.

- X = 2: Tray 2
- X = 3: Tray 3
- X = 4: Tray 4
- X = 5: Tray 5

Recommended action

No action necessary.

Tray <X> open

Description

The specified tray is open or not closed completely.

- X = 2: Tray 2
- X = 3: Tray 3
- X = 4: Tray 4
- X = 5: Tray 5

Recommended action

1. Close the tray.
2. If this message displays after the lifter drive assembly was removed or replaced, make sure that the connector of the assembly is connected correctly and fully seated.
3. If the error persists, use the media size switches in the Tray/Bin manual sensor test to test the switches.
4. If the switches do not respond, replace the associated lifter drive assembly.

Tray <X> overfilled

Description

The tray is filled above the stack-height mark.

- X = 2: Tray 2
- X = 3: Tray 3
- X = 4: Tray 4
- X = 5: Tray 5

The overfilled condition is sensed by the stack surface sensor when the tray is first closed. If the stack surface sensor does not move down (because the tray is too full), the overfilled message will be displayed and the tray will not be available for printing.

Recommended action

1. Open the tray and remove media until the tray filled indicators can be seen.
2. Close the tray.
3. Make sure that all connections from the DCC to the paper pickup assembly and lifter drive assembly are fully seated and connected.
4. If the lifter drive assembly was removed or replaced, make sure that the connector on the assembly is connected correctly and fully seated.
5. If the error persists, perform a tray bin sensor test for the paper stack sensor of the specified tray. Replace sensors if necessary.
6. If the error persists, replace the paper pickup assembly.

NOTE:

Type mismatch Tray <X>

Description

The specified tray contains a paper type that does not match the configured type.

Recommended action

The specified tray will not be used until this condition is addressed. Printing can continue from other trays.

1. Load the correct paper in the specified tray.
2. On the product control, make sure that the type loaded in the tray matches the specified setting for the tray.

Unsupported drive installed To continue, touch “OK”

Description

A non-supported hard drive has been installed. The drive is unusable by this product.

Recommended action

1. Turn the product off.
2. Remove the hard drive.
3. Turn the product on.

Unsupported supply in use OR Unsupported supply installed To continue, touch “OK”

Description

A non-supported supply has been installed or the toner cartridge is for a different product.

Recommended action

Install the correct supplies for this product. See the parts chapter in the service manual for supply part numbers.

Unsupported tray configuration

Description

The product has too many optional trays installed.

Recommended action

Turn the product off, remove the unsupported trays, and then turn the product on.

Unsupported USB accessory detected Remove USB accessory

Description

A non-supported USB accessory has been connected.

Recommended action

Turn the product off, remove the USB accessory, and then turn the product on.

Upgrade Error

Description

There was a SCB upgrade error.

Recommended action

1. Turn the product off, and then on.
2. Resend the upgrade.
3. If the error persists, replace the SCB.

Upper left bin full

Description

The booklet bin is full.

Recommended action

Remove media from the bin to continue.

USB accessory not functional

Description

A parameter in the USB accessory is not functioning correctly.

Recommended action

1. Turn the product off.
2. Remove the USB accessory.
3. Insert a replacement USB accessory.
4. Turn the product on.

USB hubs are not fully supported Some operations may not work properly

Description

Some USB hubs require more power than the product has available.

Recommended action

Remove the USB hub.

USB is write protected To clear touch “OK”

Description

The USB device is write protected and no new files can be written to it.

Recommended action

Touch the OK button to clear the error.

USB needs too much power

Description

Power requirements for the USB device attached to the product are beyond supported limits.

Recommended action

1. Remove the USB device.
2. Turn the product off, and then on.
3. Try a similar accessory that has its own power supply or requires less power.

USB needs too much power Remove USB and Then Turn Off then On

Description

A USB accessory is drawing too much electrical current. Printing cannot continue.

Recommended action

1. Turn the product off.
2. Remove the USB accessory.
3. Turn the product on.
4. Try a similar USB accessory that has its own power supply or requires less power.

USB not initialized

Description

The file system on the USB device must be initialized before it can be used.

Recommended action

Use the HP Embedded Web Server or HP Web Jetadmin to initialize the USB device.

USB storage accessory removed Clearing any associated data

Description

This message displays for about 6 seconds after a USB device is removed.

Recommended action

Touch the Hide button to remove this message.

USB storage device failure To clear touch “OK”

Description

The specified device failed.

Recommended action

Touch the OK button to clear this error.

USB storage file operation failed To clear touch “OK”

Description

A PJL file system command was received that attempted to perform an invalid operation, such as downloading a file to a nonexistent directory.

Recommended action

Touch the OK button to clear this error.

USB storage file system is full To clear touch “OK”

Description

The file system on the installed USB device is full.

Recommended action

Touch the OK button to clear this error.

Used supply installed To continue, touch “OK” OR Used supply in use Description

Description

One of the toner cartridges or supplies has been previously used.

Recommended action

If you believe you purchased a genuine HP supply, go to www.hp.com/go/anticounterfeit.

Verifying, Please Wait

Description

This message displays when the product is retrieving a print job from device memory, but can cause the product control panel to lock up.

The user enter the **Retrieve from Device Memory** menu to print a job. After selecting the desired print jobs, **Verifying, Please Wait** displays on the control panel. The status bar will move for a moment, and then lock up. Typically, if the user waits a few minutes, the error will clear and the job will print.

In rare cases, the message will lock up permanently and force the user to power cycle the product.

The event log might show the following errors as a result of power cycling the product during lockup:

- 48.05.05
- 98.03.11

Recommended action

Review online support document c03249783, “HP Color LaserJet CM4540MFP and LaserJet M4555MFP Series Printer - Message "Verifying, Please Wait" Locks Up Printer When Retrieving Print Job from Device Memory”.

Waiting for Tray <X> to lift

Description

The specified tray is in the process of lifting paper to the top of the tray (so it can feed correctly).

Recommended action

No action necessary

Windows Login Required to Use this Feature

Description

Windows login is required for the selected feature or job.

Recommended action

Enter the necessary Windows login information.

Event log messages

See the control-panel message and event-log entries section of the product reoubleshooting manual for eventl-log entry descriptions and solutions.

Print or view an event log

NOTE: The event log in using the Administration menu shows only a subset of events. For a complete event log, use the Service menu.

Print or view the event log from the Administration menu

1. From the Home screen on the product control panel, scroll to and touch the Administration button.
2. Open the following menus:
   - Troubleshooting
   - Event Log
3. The event log displays on the screen. To print it, touch the Print button.

Print or view the event log from the Service menu

1. From the Home screen on the product control panel, scroll to and touch the Device Maintenance button.
2. Open the Service menu.
3. On the sign-in screen, select the Service Access Code option from the drop-down list.
4. Enter the following service access code for this product: Specs Service Pin.
5. Open the Event Log menu.
6. The event log displays on the screen. To print it, touch the Print button.

Clear an event log

1. From the Home screen on the product control panel, scroll to and touch the Device Maintenance button.
2. Open the Service menu.
3. On the sign-in screen, select the Service Access Code option from the drop-down list.
4. Enter the following service access code for this product: Specs Service Pin.
5. Open the Event Log menu.
6. Select the Clear Event Log item, and then touch the OK button.

Clear jams

NOTE: Some of the figures in this section show the M806 product; however, the procedures in this section apply to both the M806 and M830 products.

Auto-navigation for clearing jams

The auto-navigation feature assists you in clearing jams by providing step-by-step instructions on the control panel. When you complete a step, the product displays instructions for the next step until you have completed all steps in the procedure.

Experiencing frequent or recurring paper jams?

To reduce the number of paper jams, try these solutions.

1. Use only paper that meets HP specifications for this product.
2. Use paper that is not wrinkled, folded, or damaged. If necessary, use paper from a different package.
3. Use paper that has not previously been printed or copied on.
4. Make sure the tray is not overfilled. If it is, remove the entire stack of paper from the tray, straighten the stack, and then return some of the paper to the tray.
5. Make sure the paper guides in the tray are adjusted correctly for the size of paper. Adjust the guides so they are touching the paper stack without bending it.
6. Make sure that the tray is fully inserted in the product.
7. If you are printing on heavy, embossed, or perforated paper, use the manual feed feature and feed sheets one at a time.
8. From the Home screen on the product control panel, scroll to and touch the Trays button. Verify that the tray is configured correctly for the paper type and size.
9. Make sure the printing environment is within recommended specifications.

Clear jams in the front door

1. Open the front door. Make sure that the door is completely open.

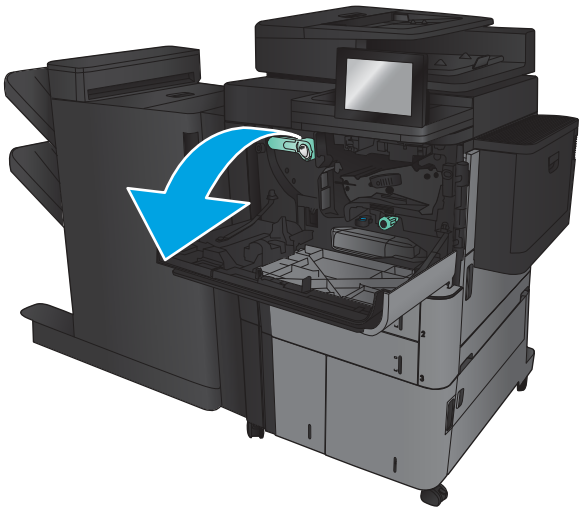

2. Push the button on the lever, and then rotate the toner-cartridge lever to the down position.

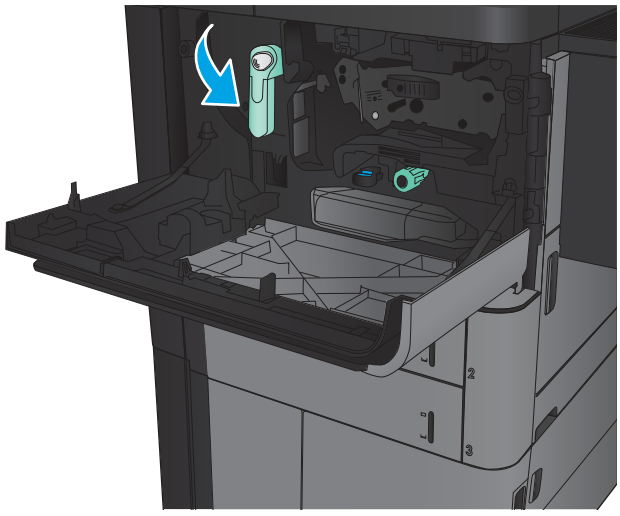

3. Grasp the handle of the toner cartridge and pull out to remove it.

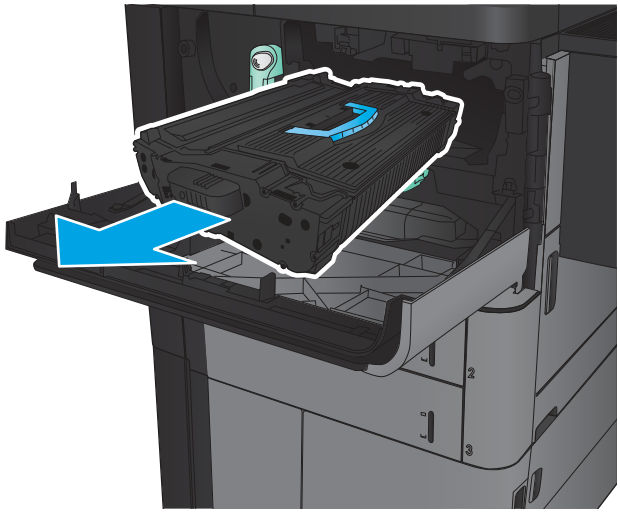

4. Turn the green knob counter-clockwise, and then remove the jammed paper.

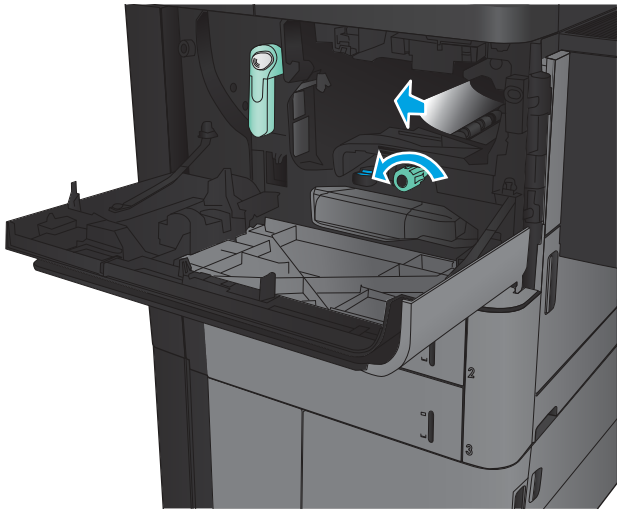

5. Align the toner cartridge with its slot, and then insert the toner cartridge into the product. The toner cartridge will drop slightly when it is in place.

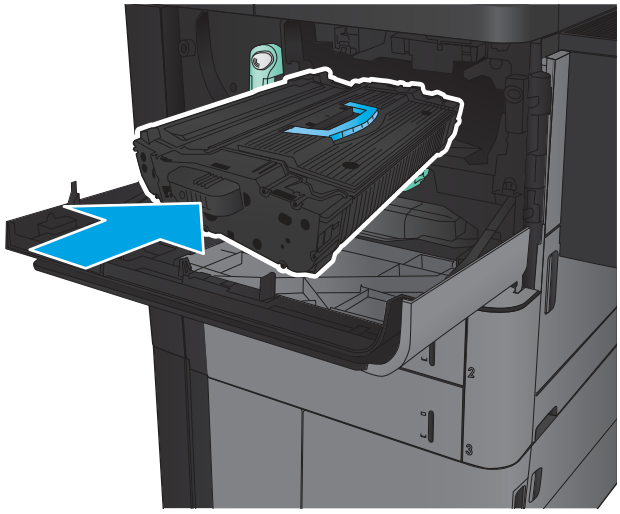

6. Push the button on the lever, and then rotate the toner-cartridge lever to the up position.

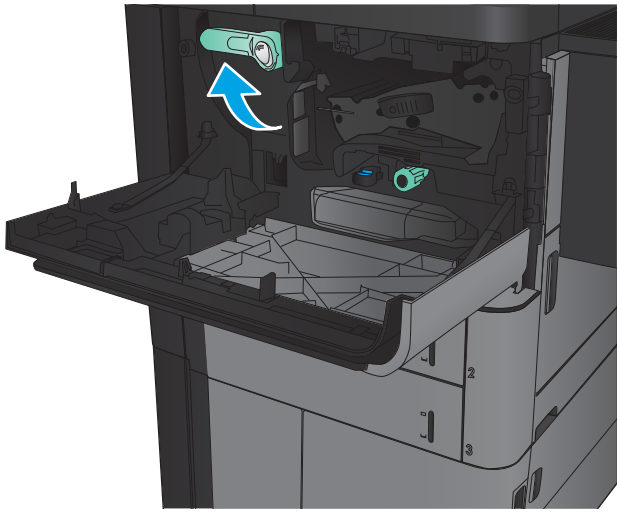

7. Close the front door.

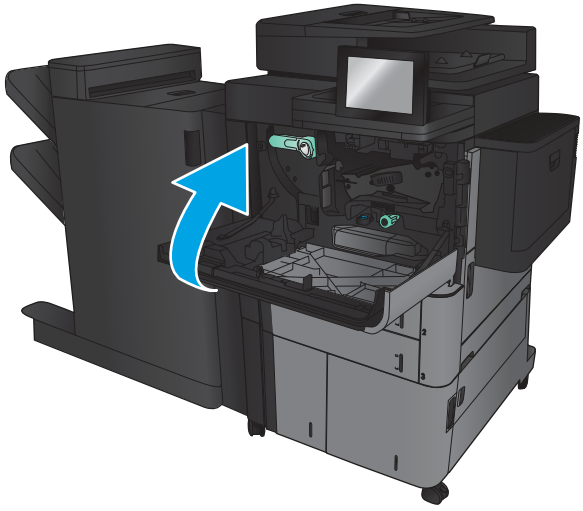

Clear jams in Tray 1

1. If jammed paper is visible in Tray 1, clear the jam by pressing the jam release button under the tray and gently pulling the paper straight out.

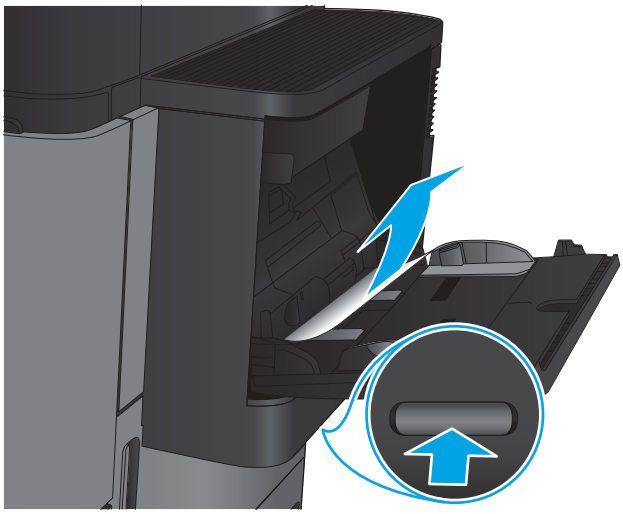

2. If you cannot remove the paper, or if no jammed paper is visible in Tray 1, open the right door.

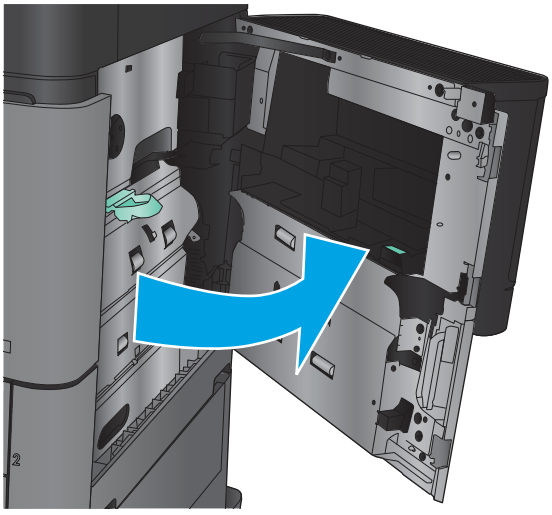

3. If jammed paper is in the Tray 1 feed area, lift the jam access cover and remove the paper.

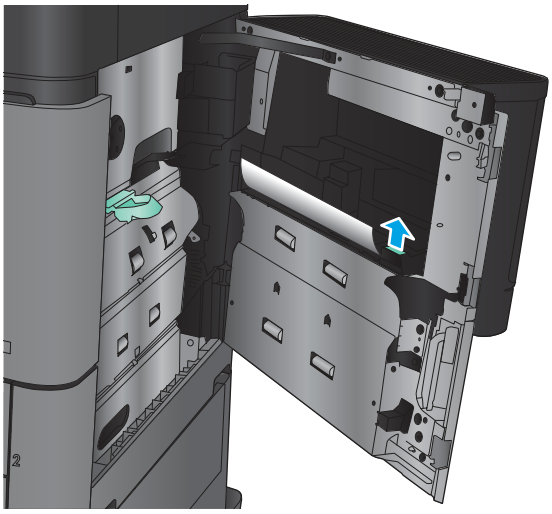

4. Pull the jam-access cover lever out, and then lift it to open it.

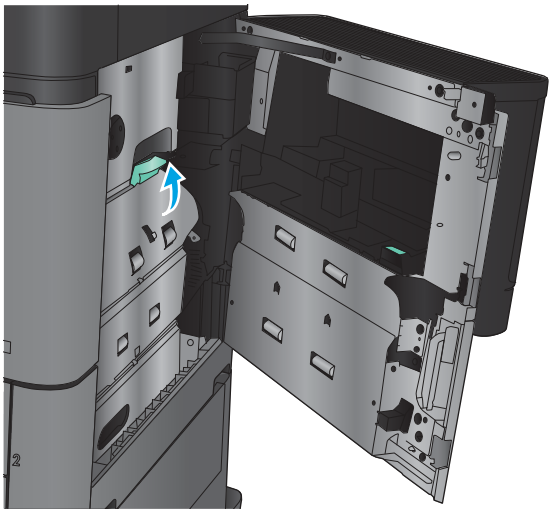

5. Gently pull the paper out of the pickup area.

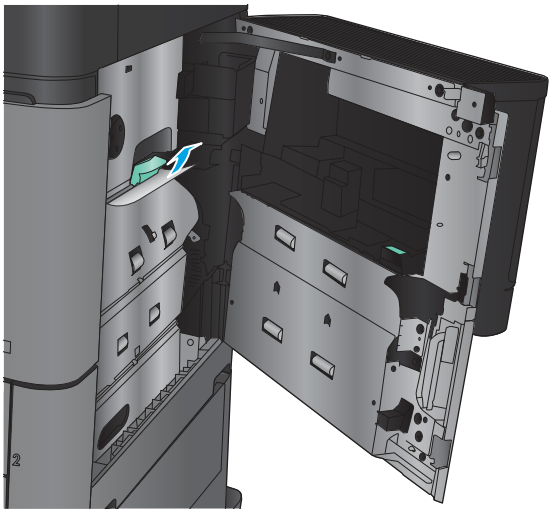

6. Pull the jam-access cover lever out, and then lower it to close it.

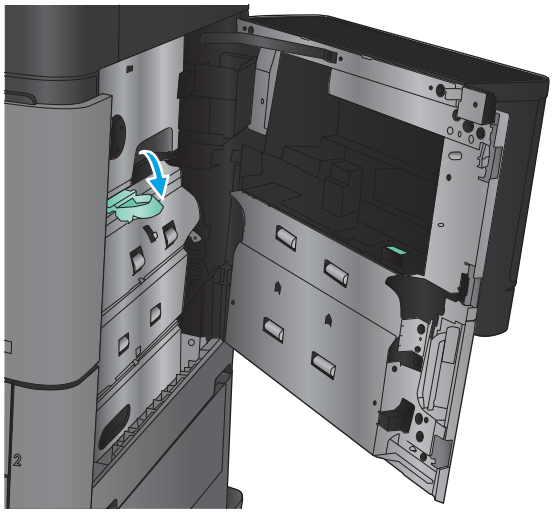

7. Close the right door.

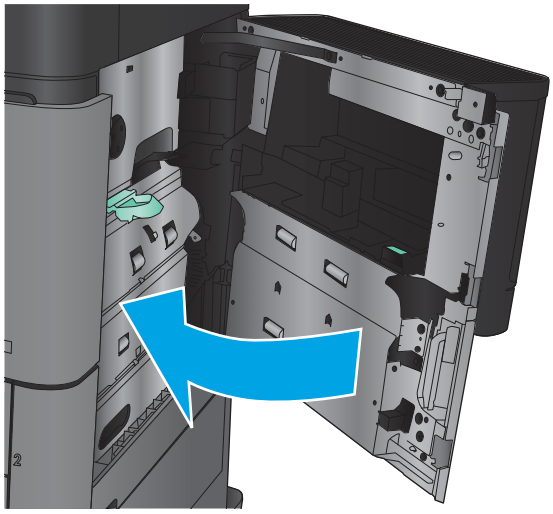

Clear jams in the right door

1. Open the right door.

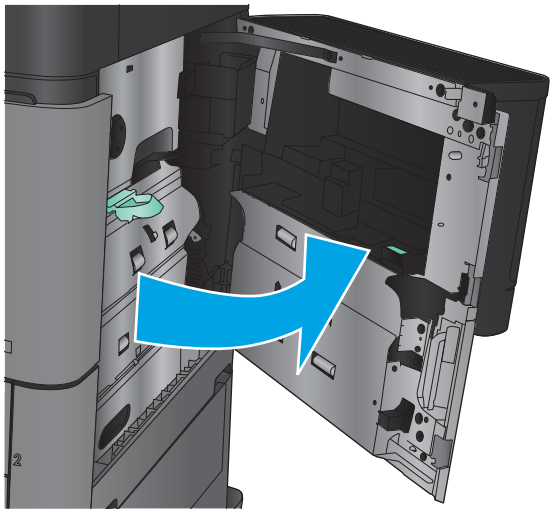

2. If there is jammed paper in the door, lift the jam access-cover, and then gently pull the paper straight out.

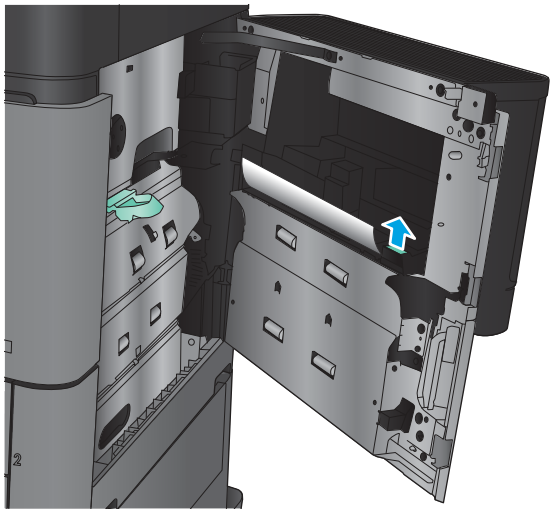

3. If there is jammed paper visible at the bottom of the door, gently pull it straight down.

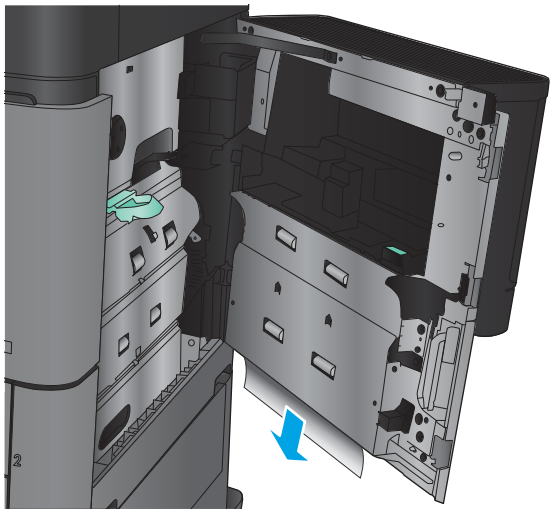

4. Pull the jam-access cover lever out, and then lift it to open it.

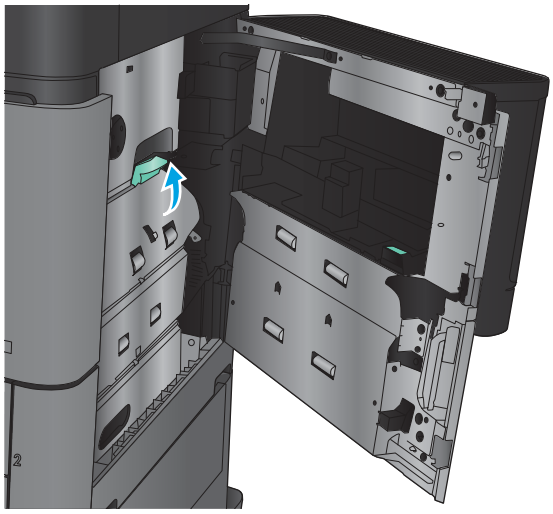

5. Gently pull the paper out of the pickup area.

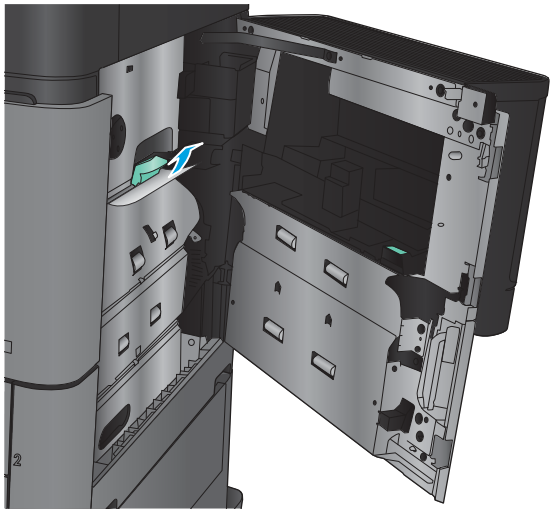

6. Pull the jam-access cover lever out, and then lower it to close it.

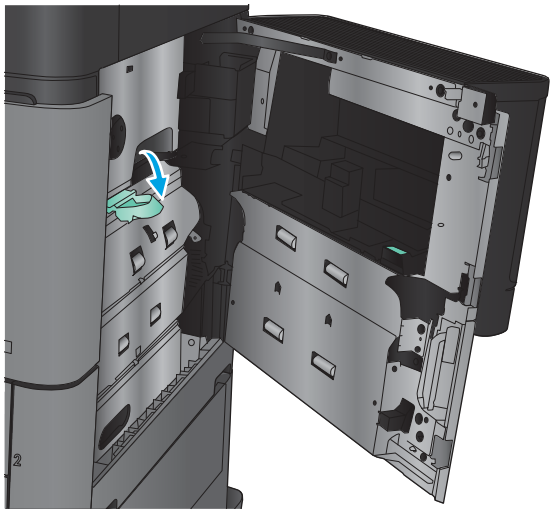

7. Close the right door.

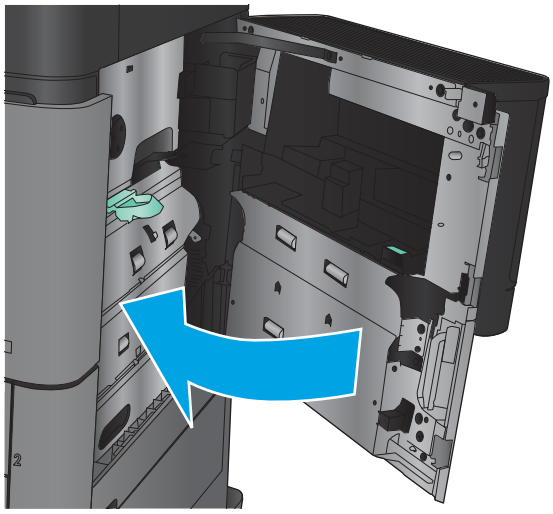

Clear jams in Tray 2 and Tray 3

NOTE: The procedure to clear jams for Tray 3 is the same as for Tray 2. Only Tray 2 is shown here.

1. Open the tray.

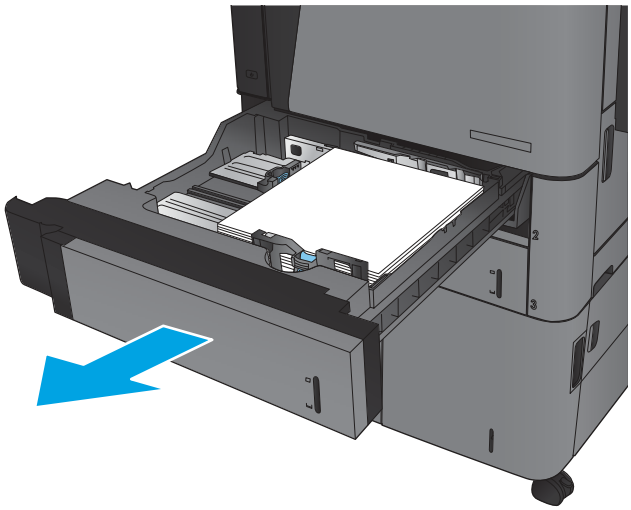

2. Remove any jammed or damaged sheets of paper.

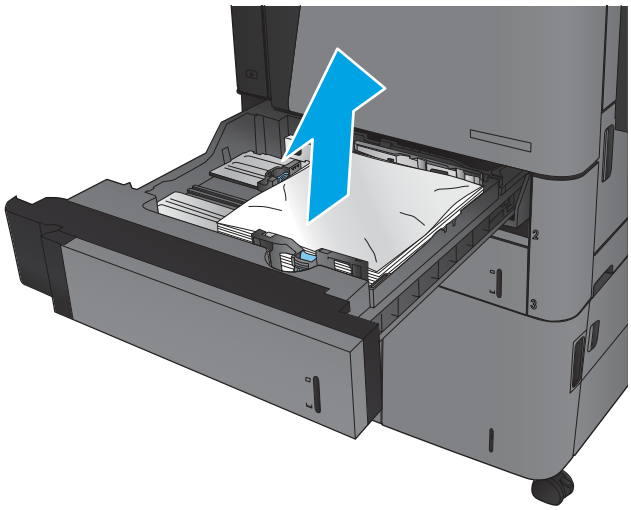

3. Reinsert and close the tray.

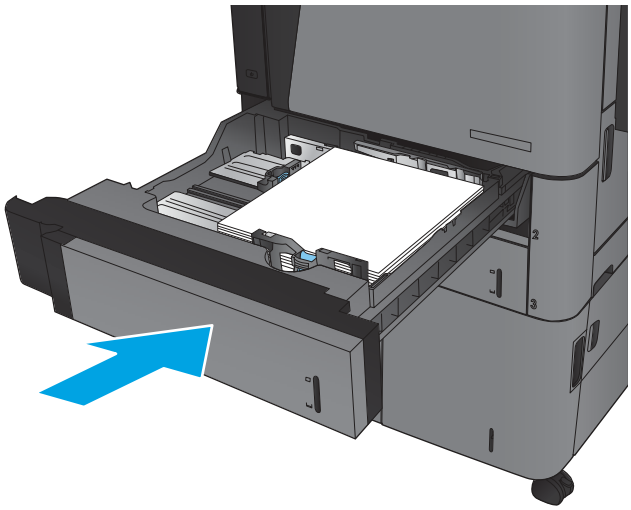

Clear jams in Tray 4 and Tray 5

1. Open the right and left trays.

   NOTE: You do not need to load both trays at the same time.

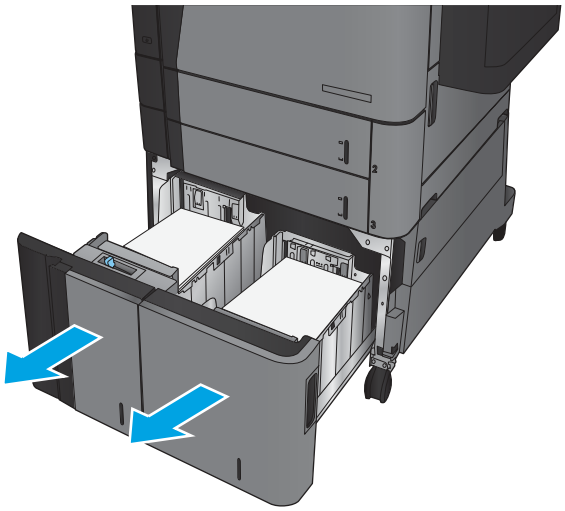

2. Remove the paper from the trays and discard any damaged sheets.

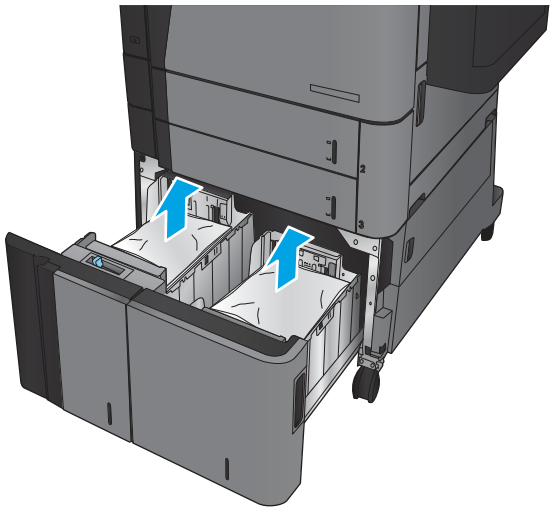

3. Above the right-side tray, press the green button to release the jam-access plate.

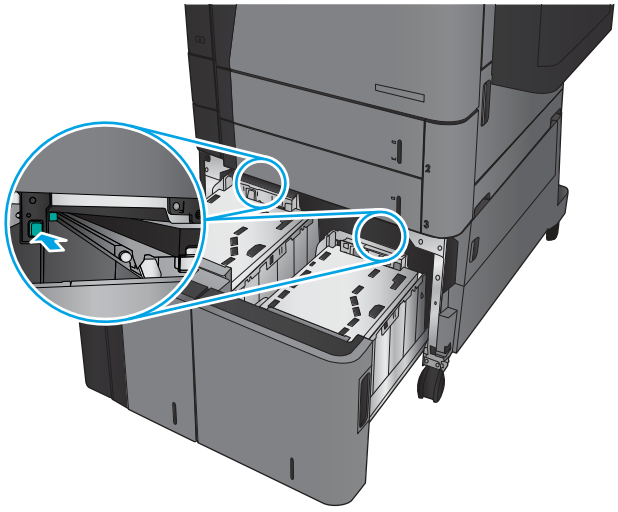

4. If jammed paper is in the feed area, pull it down to remove it.

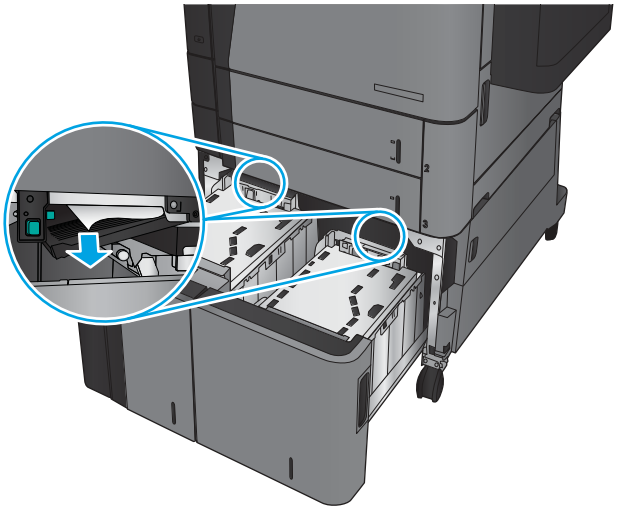

5. Push up on the jam-access plate to close it.

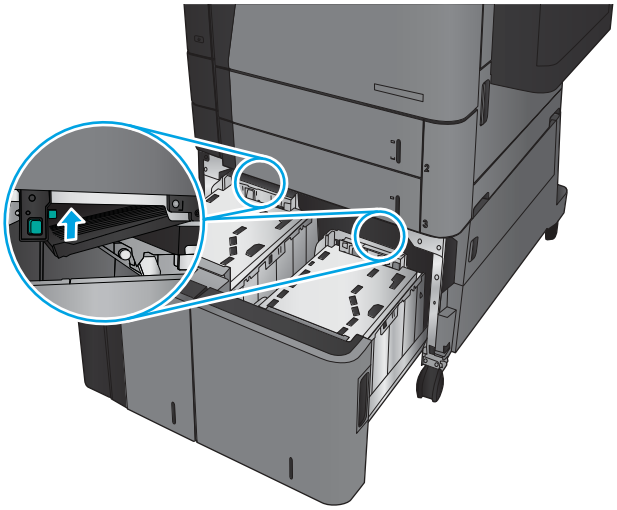

6. Load full reams of paper into each side of the tray. The right side holds 1,500 sheets of paper. The left side holds 2,000 sheets of paper.

   NOTE: For best results, load full reams of paper. Avoid dividing reams into smaller sections.

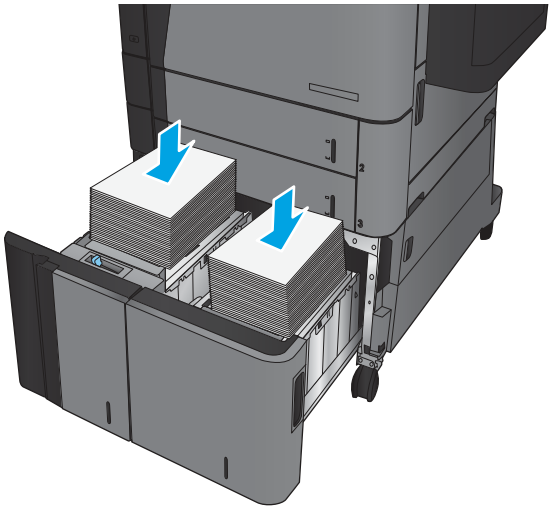

7. Close the right and left trays.

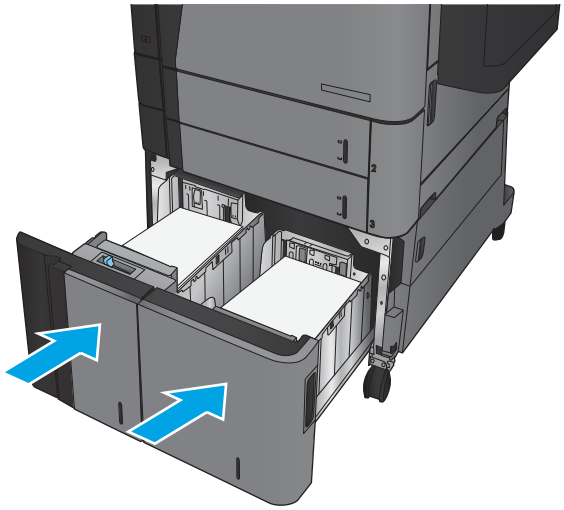

8. Open the jam-access door on the right side of the high-capacity tray cabinet.

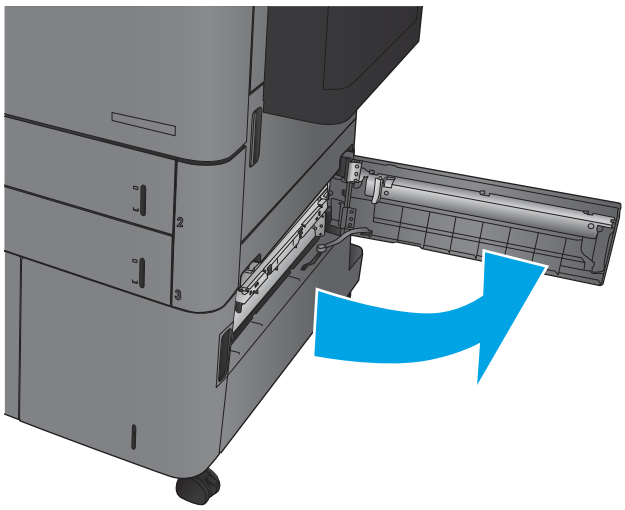

9. Remove any jammed paper.

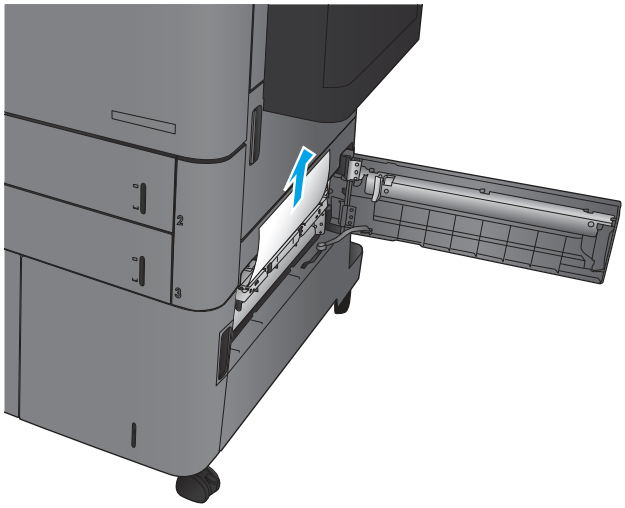

10. Close the jam-access door on the right side of the high-capacity tray cabinet.

    NOTE: If after clearing the jam the product control panel displays a message that there is no paper in the tray or the tray is over filled, remove the tray and look behind it for any remaining paper.

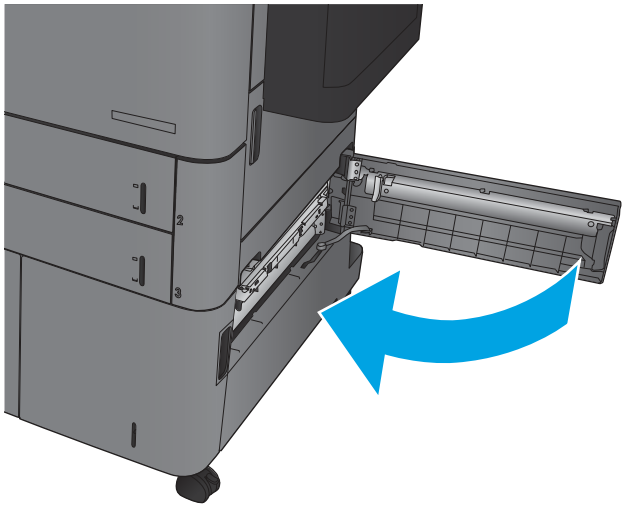

Clear jams in the duplexer

1. Pull the release handle on the top of the finishing accessory, and then slide the finisher away from the product until it stops.

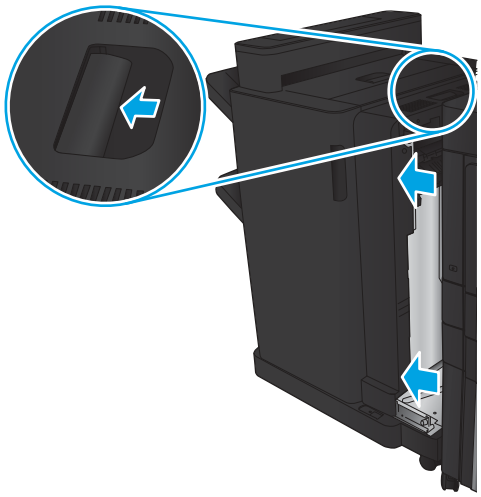

2. Open the left door.

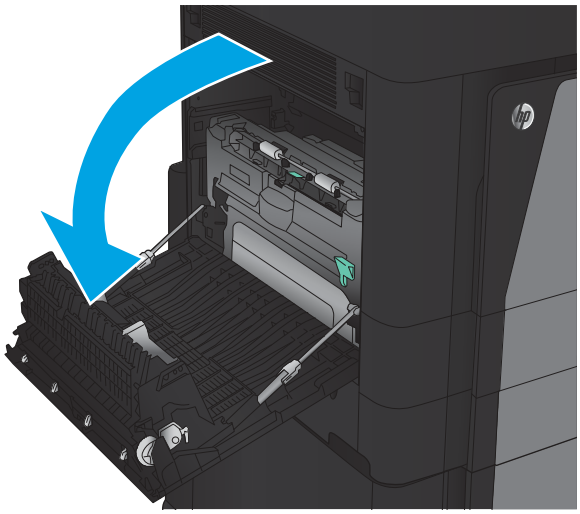

3. Lift the jam access cover on the duplexer.

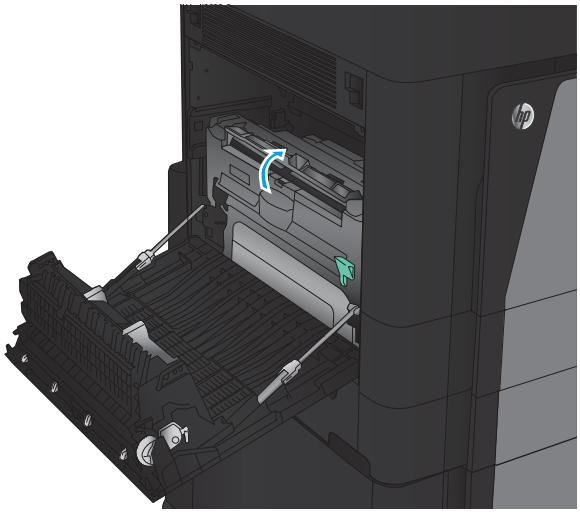

4. Gently remove any jammed or damaged paper from this area by pulling it out of the product.

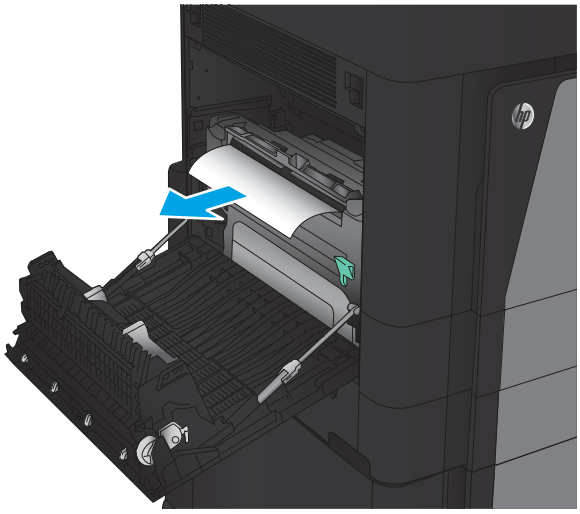

5. Press down on the latch to release the duplexer.

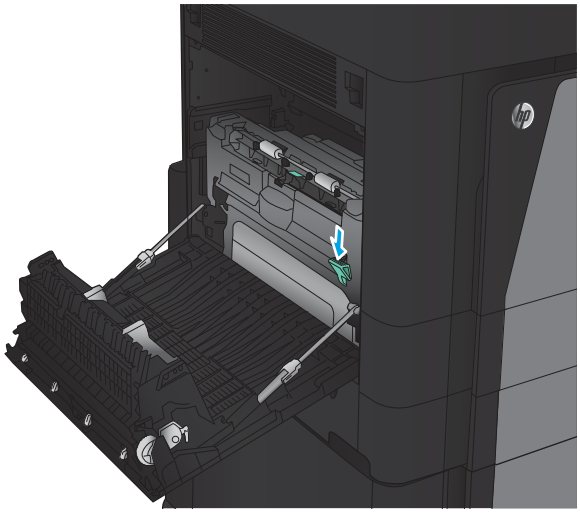

6. Pull the duplexer straight out of the product until it stops.

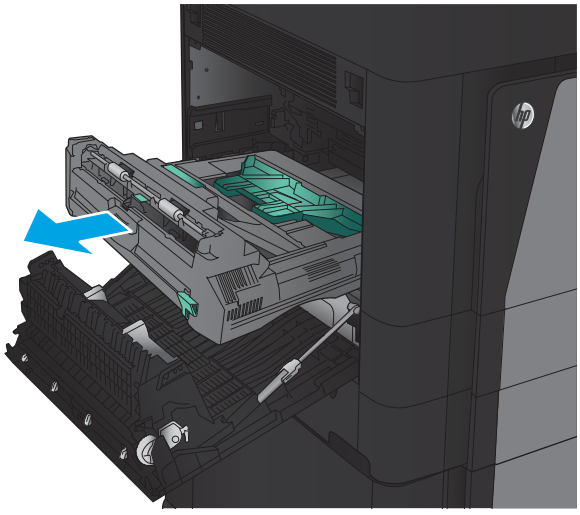

7. Lift the first jam-access cover, and then remove any jammed paper.

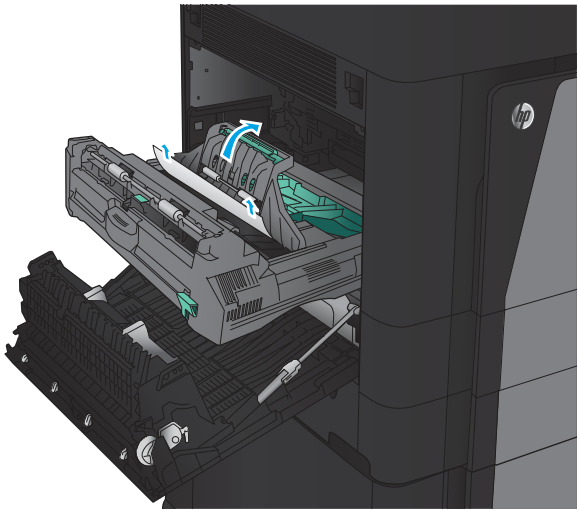

8. Lift the second jam-access cover, and then remove any jammed paper.

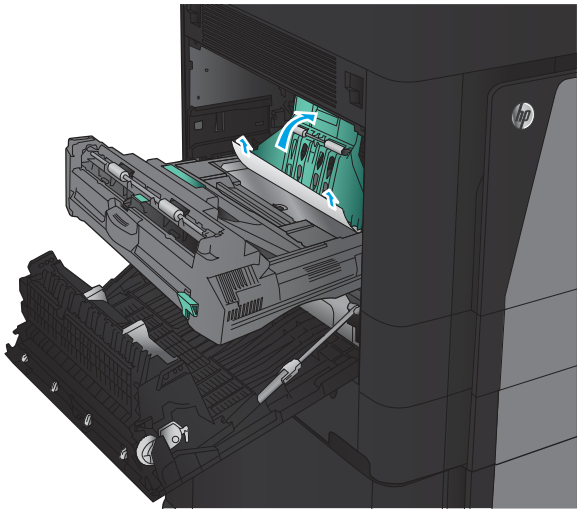

9. Open the front door.

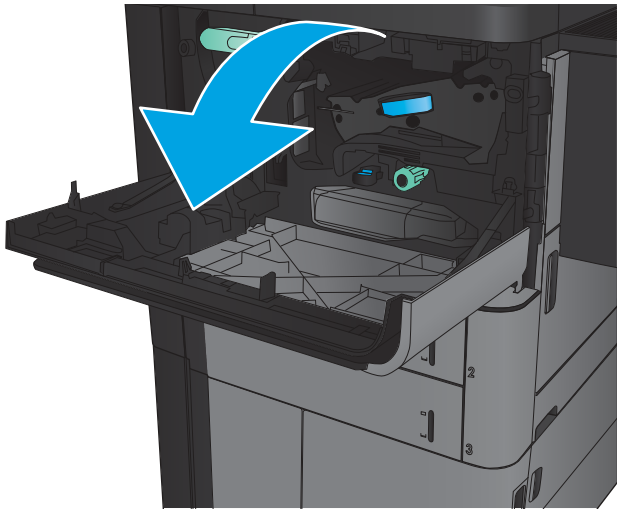

10. Remove any jammed paper from the opening below the toner-cartridge area.

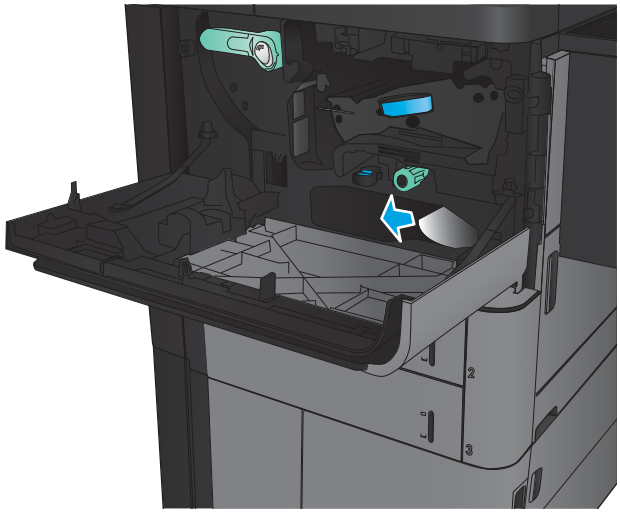

11. Close the front door.

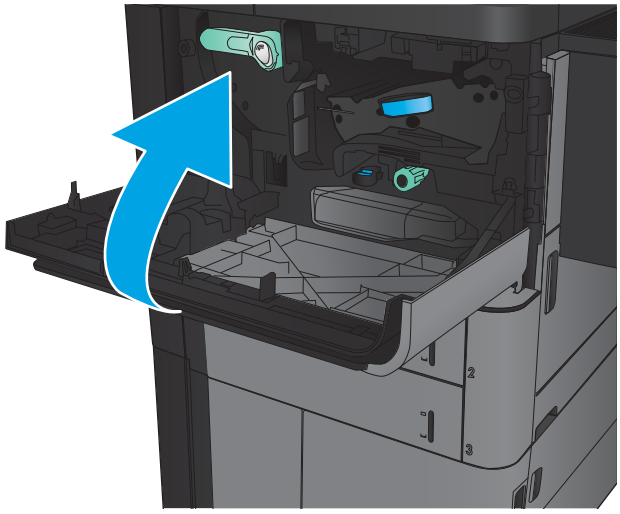

12. Slide the duplexer into the slot until it locks into place.

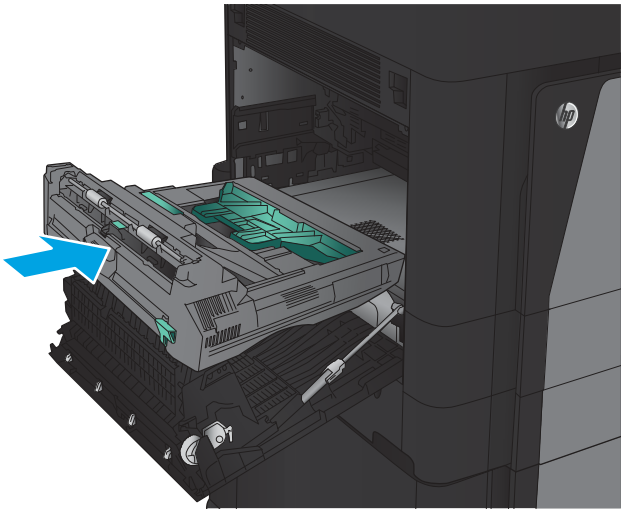

13. Close the left door.

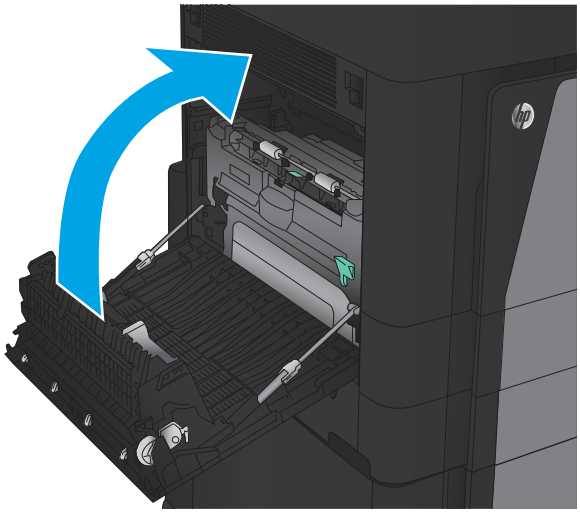

14. Attach the finishing accessory.

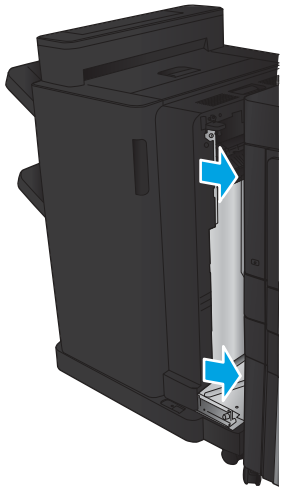

Clear jams in the left door (fuser area)

⚠ **WARNING!** The fuser can be hot while the product is in use.

1. Lift the release handle on the top of the finishing accessory, and then slide the finisher away from the product until it stops.

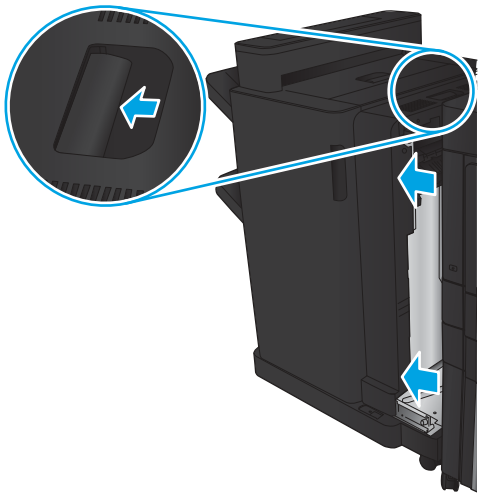

2. Open the left door of the product.

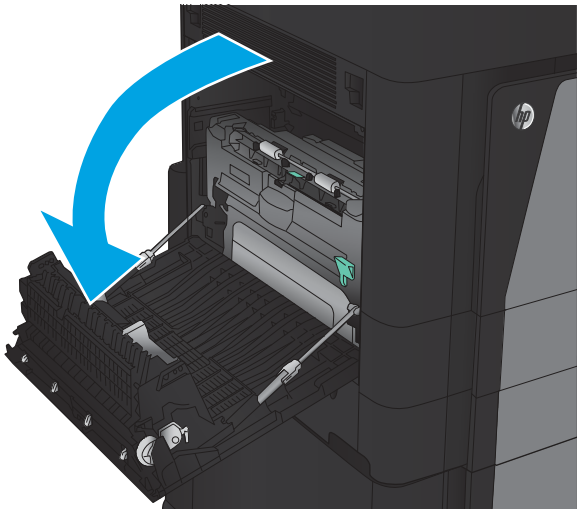

3. Push down to release the latch on the duplexer.

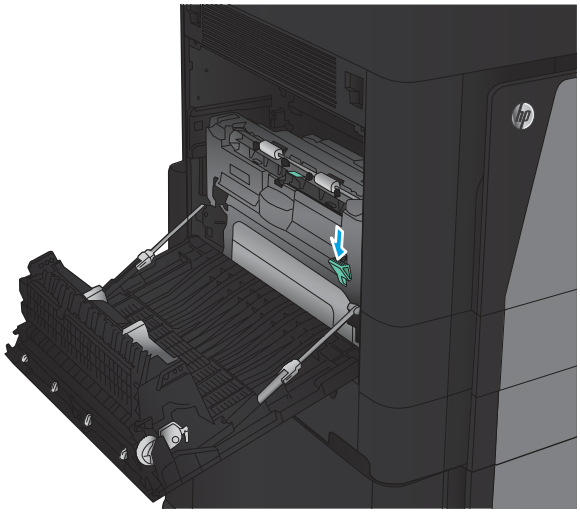

4. Pull the duplexer straight out of the product until it stops.

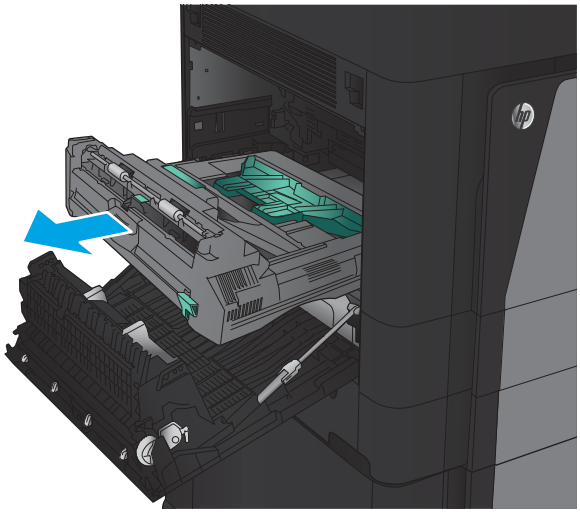

5. Open the jam-access cover.

   WARNING! The fuser can be hot while the product is in use.

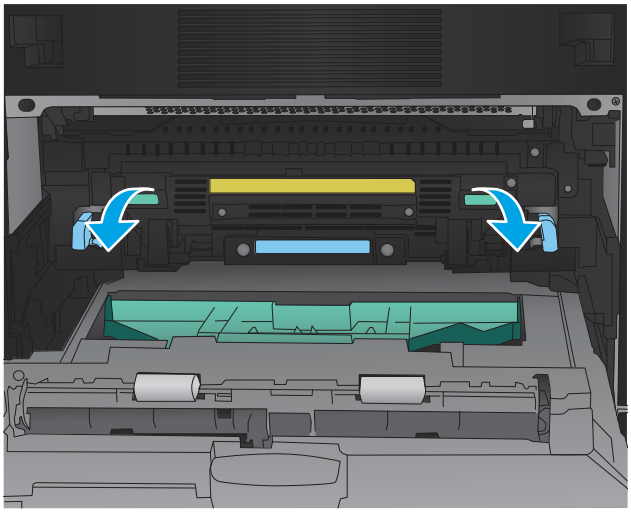

6. Gently remove the jammed paper.

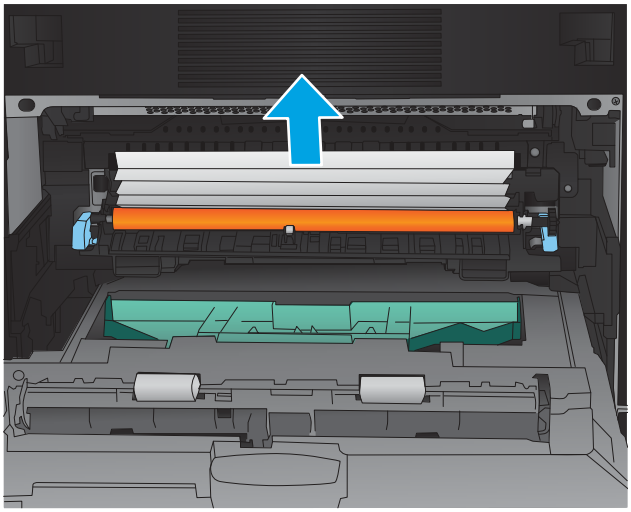

7. Slide the duplexer into the slot until it locks into place.

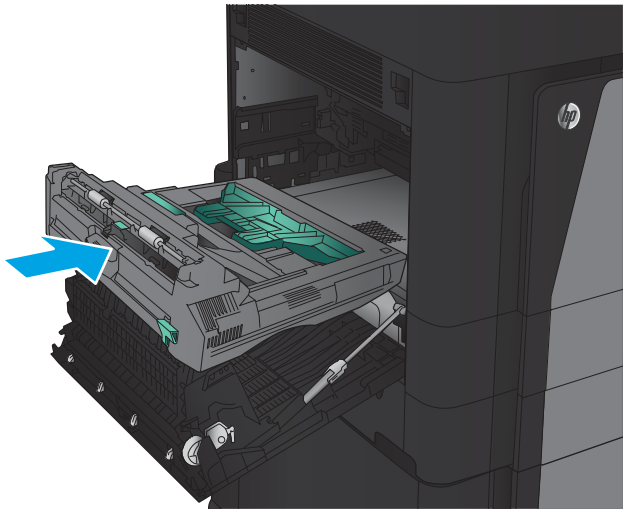

8. Close the left door.

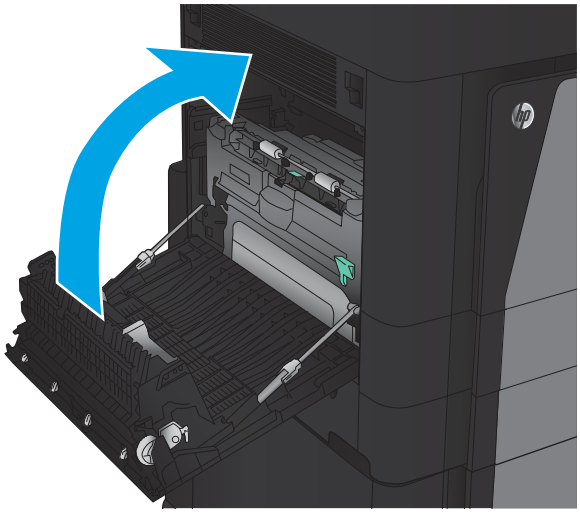

9. Attach the finisher.

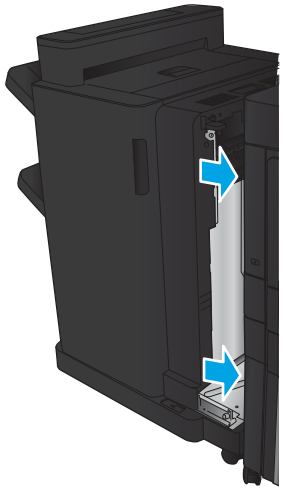

Clear jams in the output bin area (M806 only)

1. If a finishing accessory is not attached to the product and paper is visible from the output bin, grasp the leading edge and remove it.

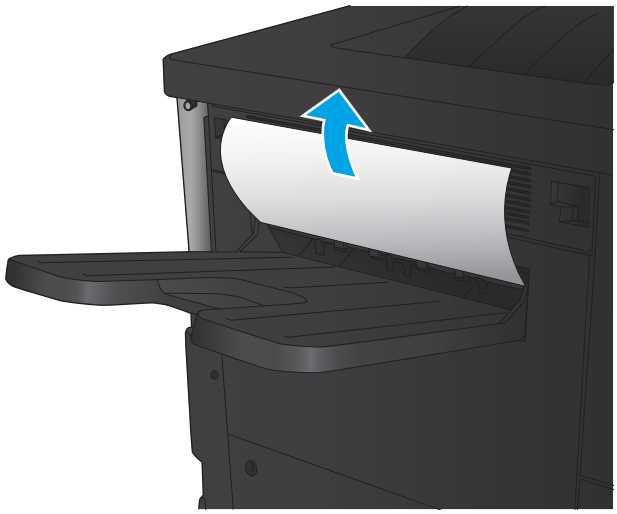

2. If a finishing accessory is attached to the product, lift the handle to open the top cover of the finishing accessory.

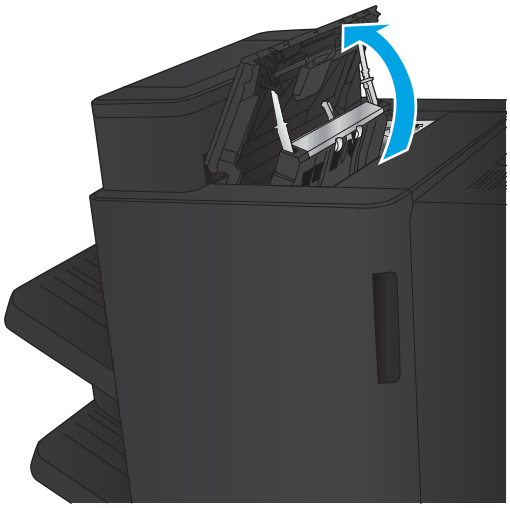

3. Remove jammed paper from the inside of the finishing accessory.

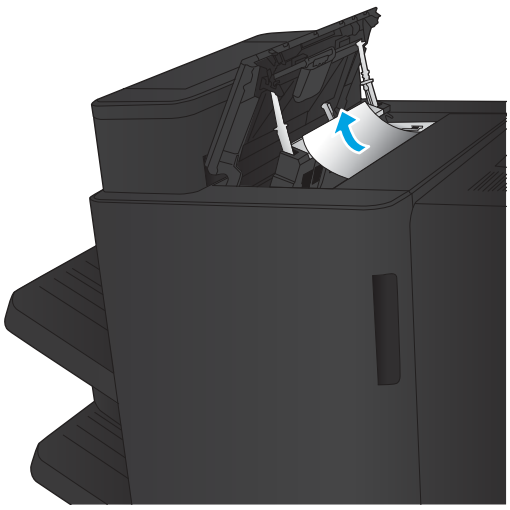

4. Close the top cover of the finishing accessory.

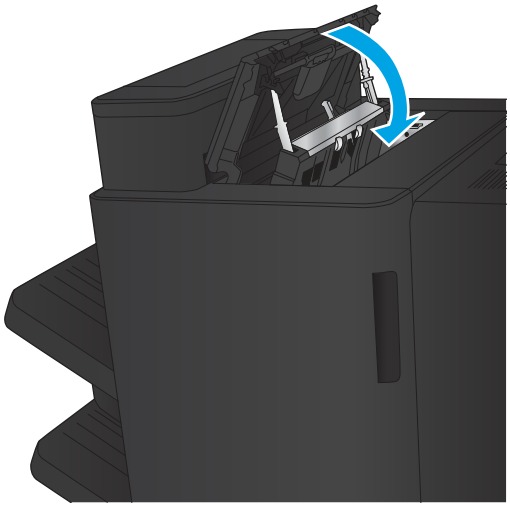

5. Lift the jam-access cover for the output slot. If you can see any jammed paper, gently pull it out.

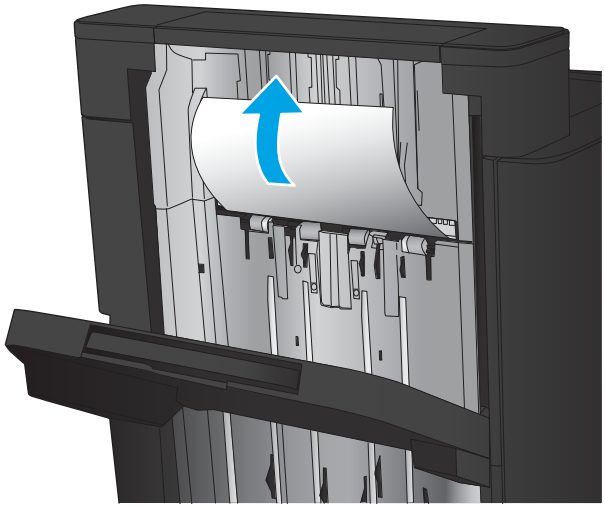

Clear jams in the stapler/stacker accessory

- Clear jams in the stapler/stacker
- Clear connection jams
- Clear Staple 1 jams

Clear jams in the stapler/stacker

1. Open the top left door.

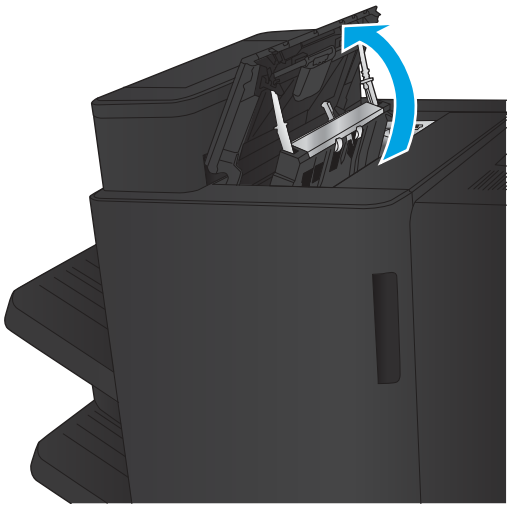

2. Lift the jam access cover for the output slot, and gently remove any jammed paper.

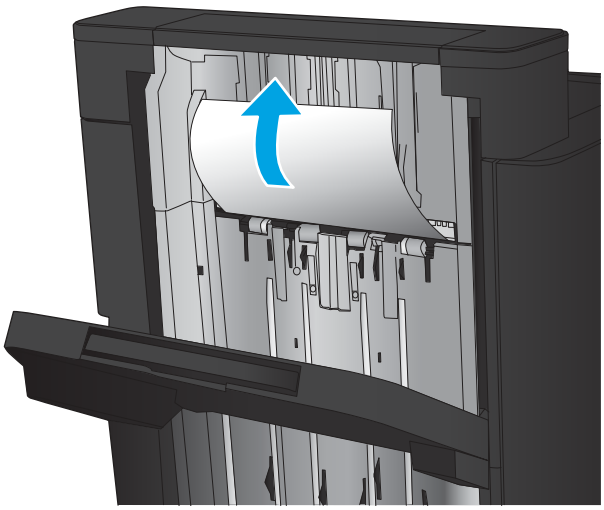

3. Remove all paper from the top left door area.

4. Close the top left door.

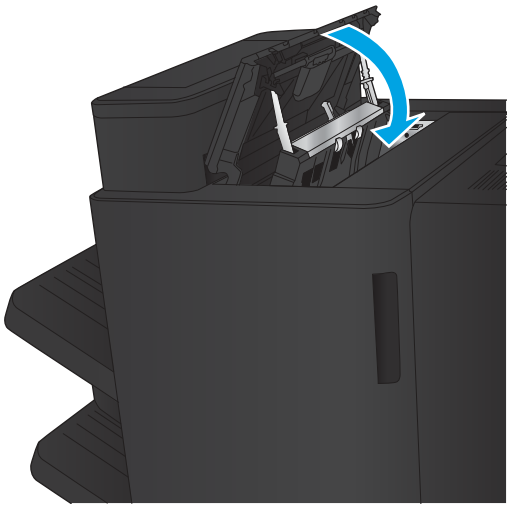

Clear connection jams

1. Pull the release handle on the top of the finishing accessory, and then slide the finisher away from the product until it stops.

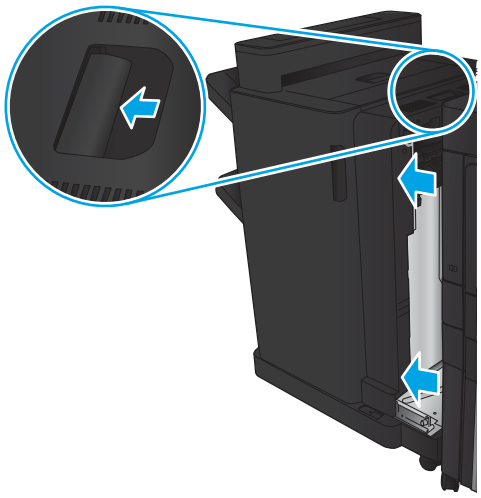

2. Remove any paper from the area.

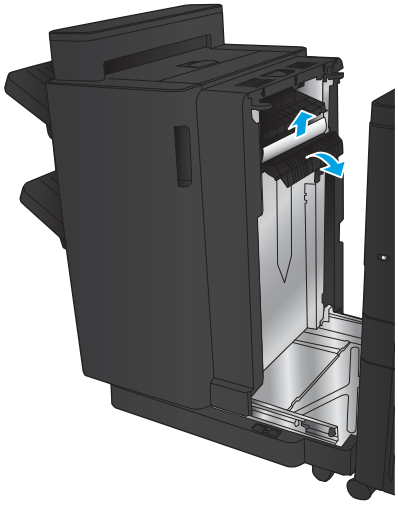

3. Attach the finishing accessory.

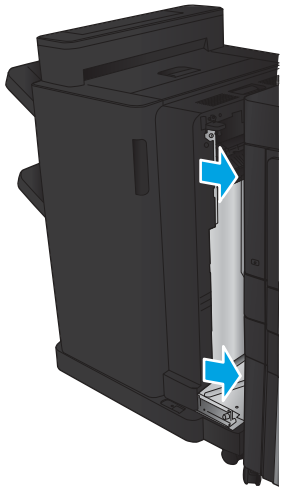

Clear Staple 1 jams

1. Lift the jam access cover for the output slot, and gently remove any jammed paper.

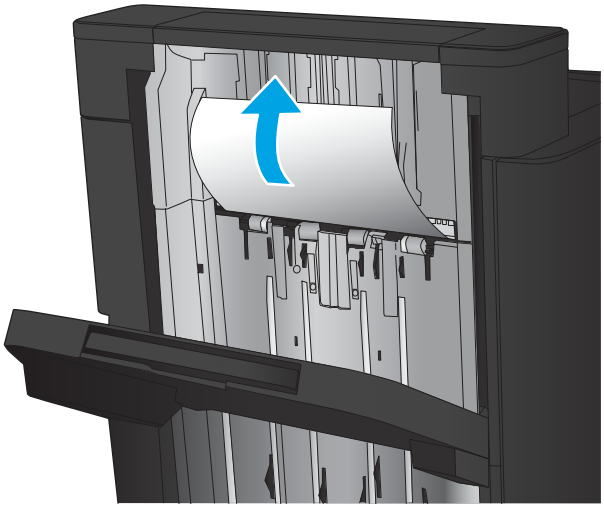

2. Wait three seconds, and then open the front left door.

3. Pull the staple cartridge up and out to remove it.

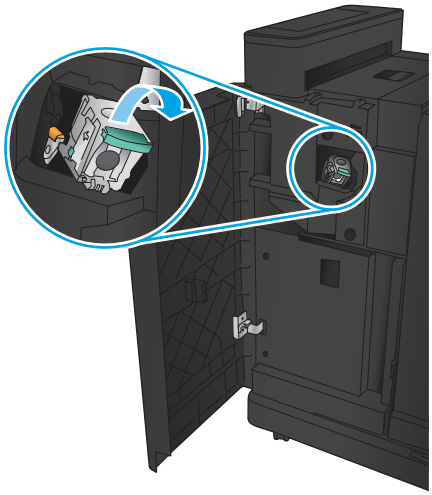

4. Lift up the metal handle on the front of the staple cartridge.

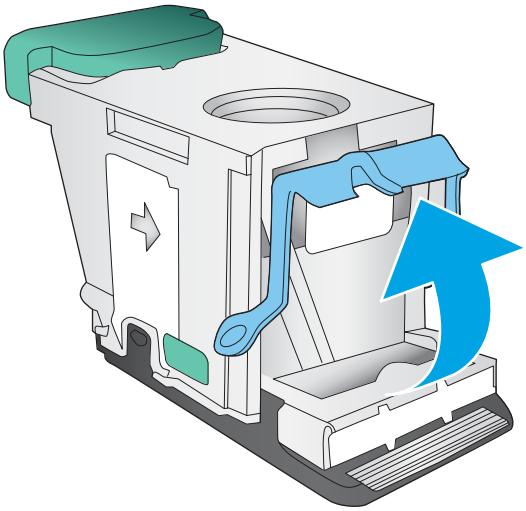

5. Remove any jammed staples from the staple cartridge.

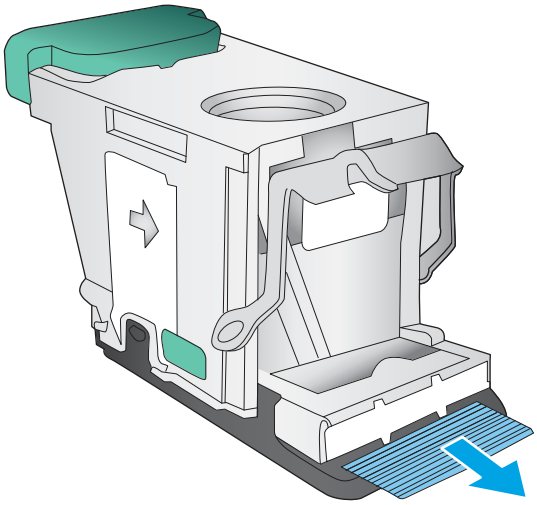

6. Push down the metal handle on the front of the staple cartridge.

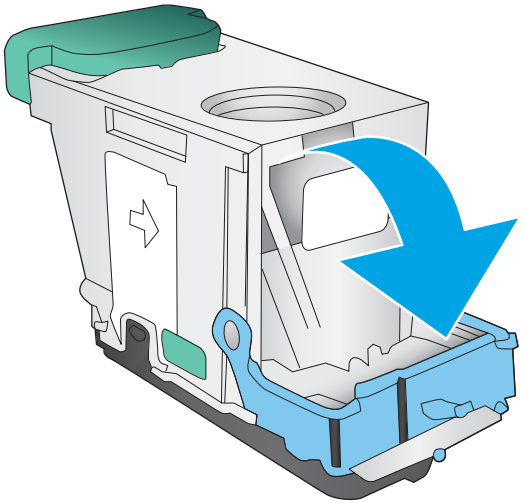

7. Insert the staple cartridge. Press down on the top of the staple cartridge until it clicks into place.

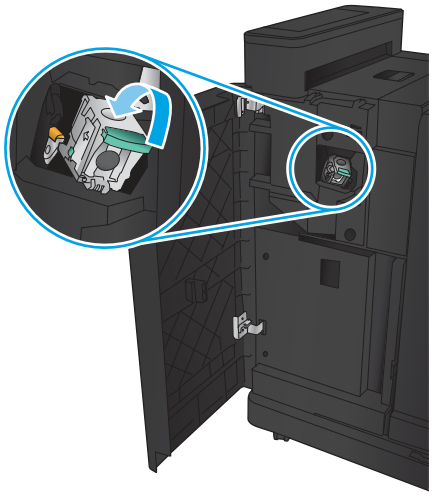

8. Close the front left door.

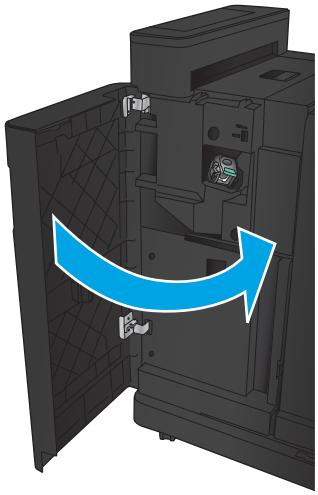

Clear jams in the stapler/stacker with hole punch accessory

- Clear top left door jams in the stapler/stacker with hole punch accessory
- Clear a connection jam in the stapler/stacker with hole punch accessory
- Clear Staple 1 jams

Clear top left door jams in the stapler/stacker with hole punch accessory

1. Open the front left door.

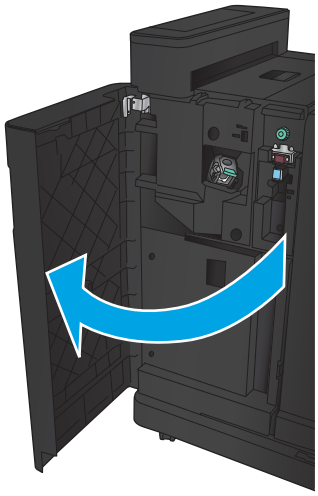

2. Open the top left door.

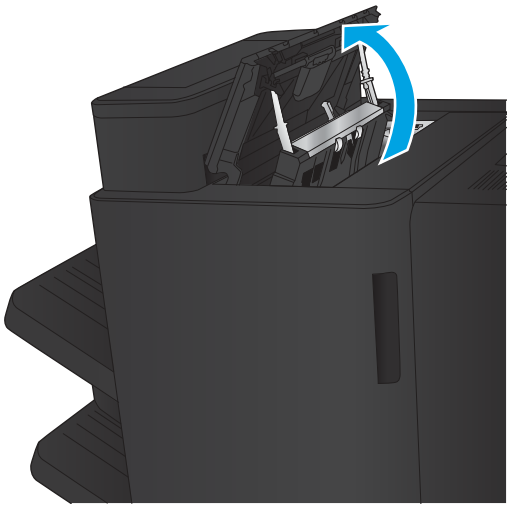

3. Turn the knob to align the arrows.

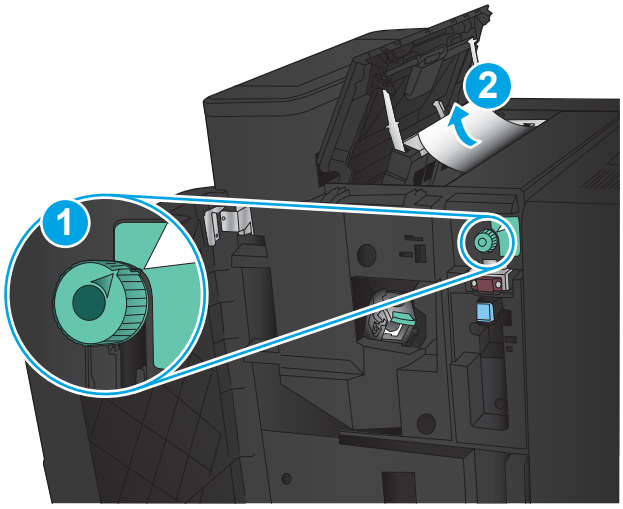

4. Lift the hole-punch unit.

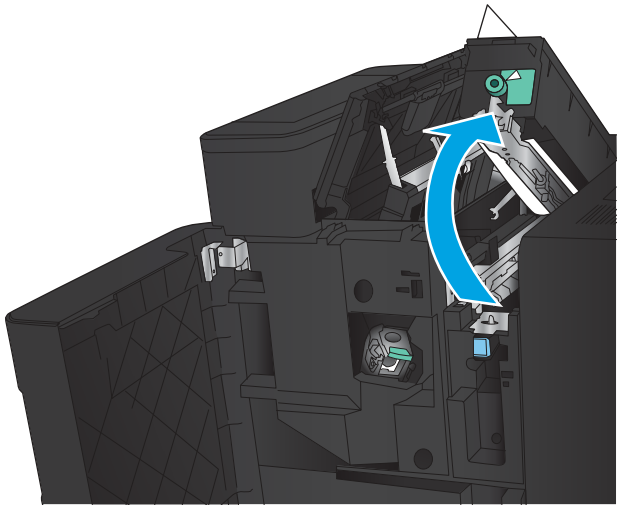

5. Lift the jam access cover for the output slot, and gently remove any jammed paper.

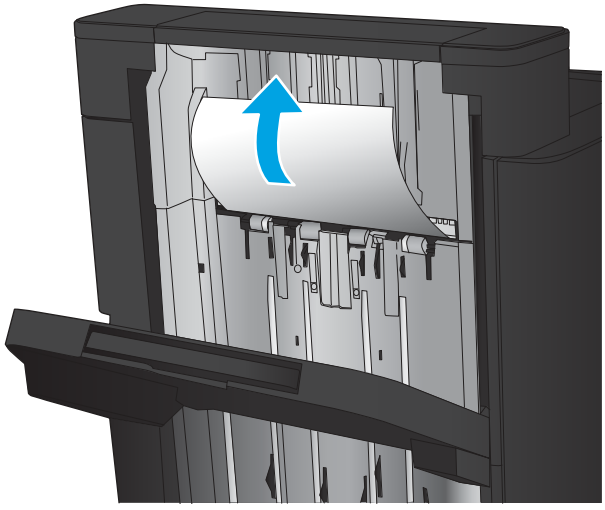

6. Remove jammed paper from top left cover area.

7. Close the hole-punch unit.

   NOTE: Ensure the notch on the hole punch is positioned as shown in the graphic.

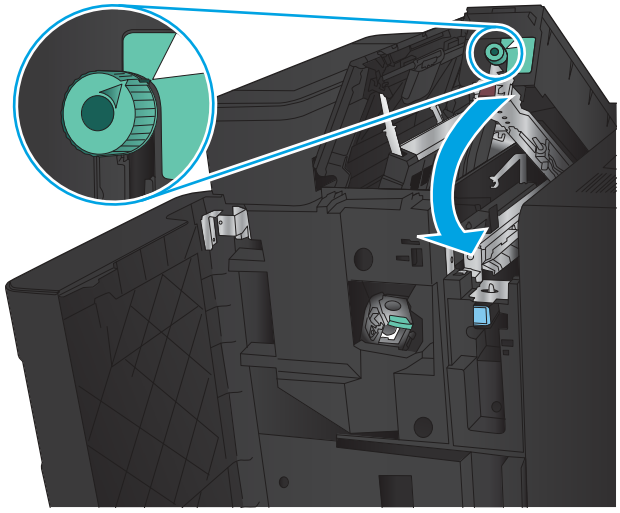

8. Close the top left door.

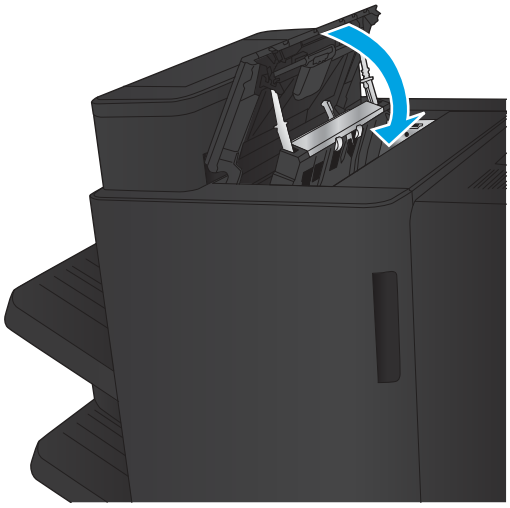

9. Close the front left door.

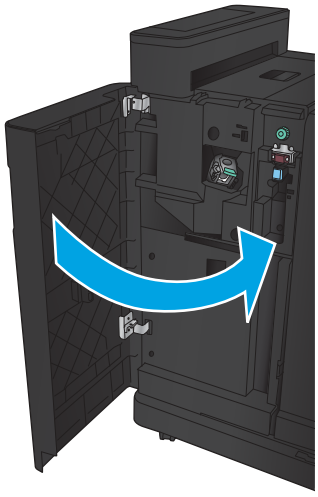

Clear a connection jam in the stapler/stacker with hole punch accessory

1. Pull the release handle on the top of the finishing accessory, and then slide the finisher away from the product until it stops.

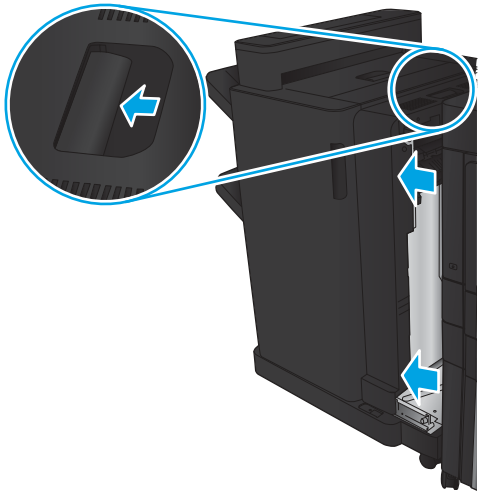

2. Remove any paper from the area.

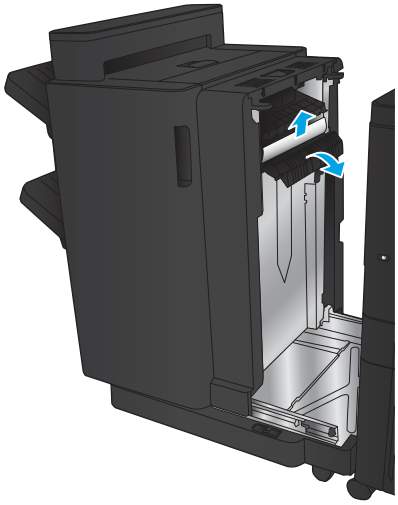

3. Open the front left door.

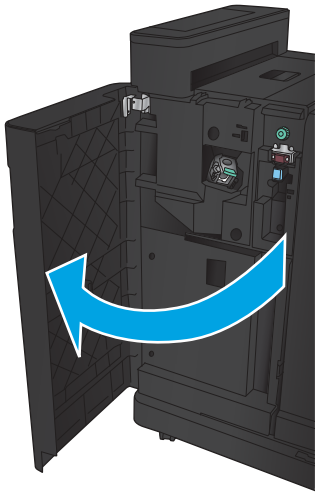

4. Open the top left door.

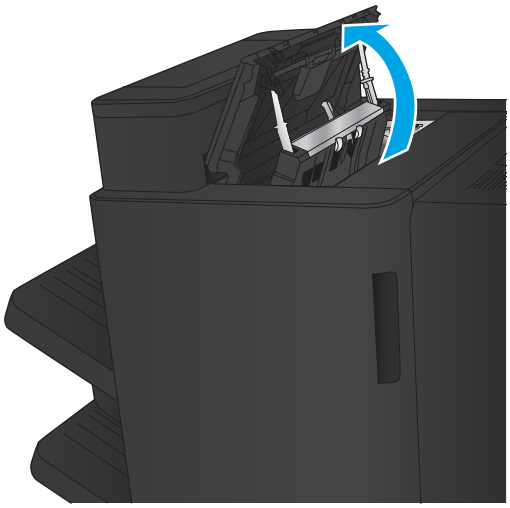

5. Turn the knob to align the arrows, and then gently pull out the jammed paper.

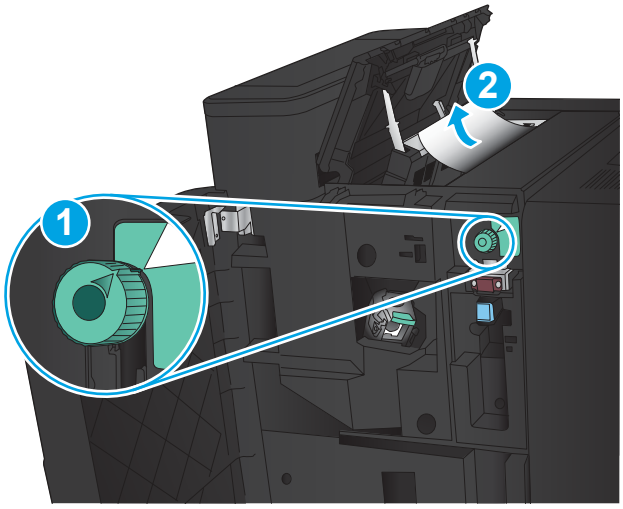

6. If you cannot remove the jammed paper, lift the hole-punch unit.

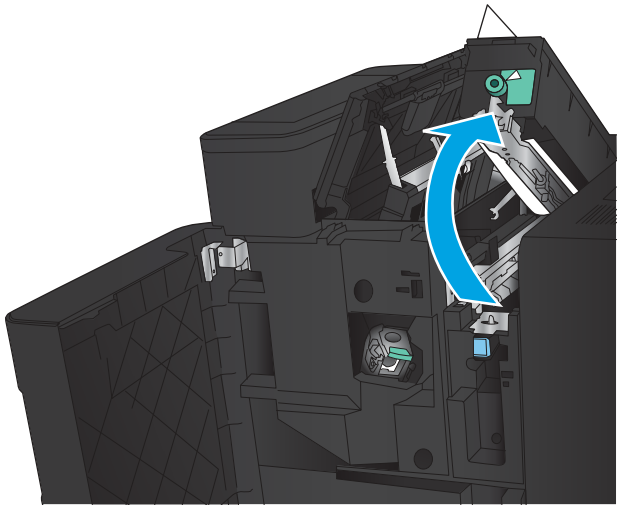

7. Remove the jammed paper from the bottom of the hole-punch unit.

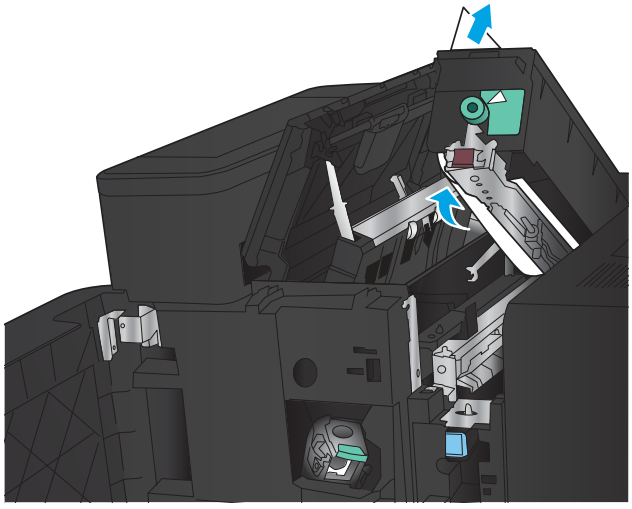

8. Close the hole-punch unit.

   NOTE: Ensure the arrow on the hole-punch knob is positioned as shown in the graphic.

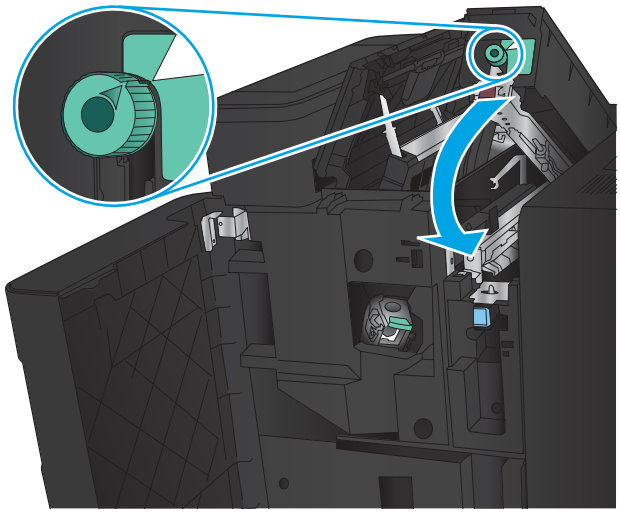

9. Close the top left door.

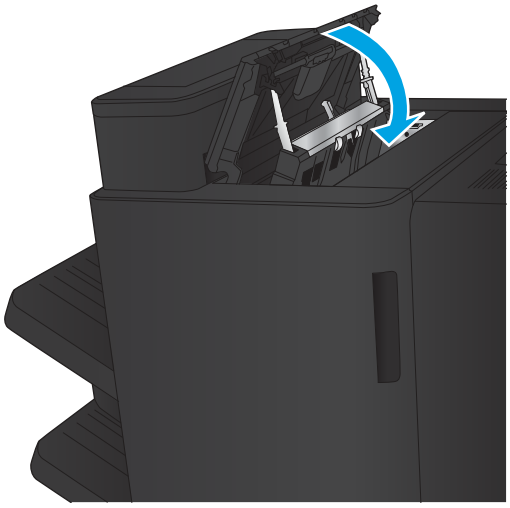

10. Close the front left door.

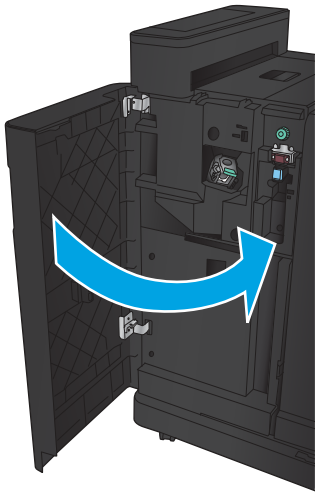

11. Attach the finishing accessory to the product.

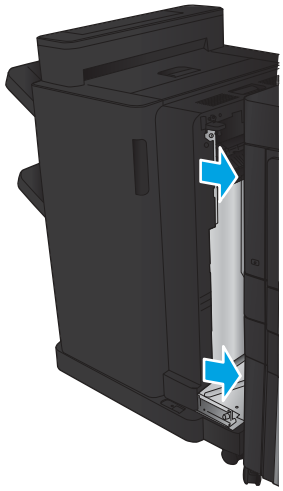

Clear Staple 1 jams

1. Lift the jam access cover for the output slot, and gently remove any jammed paper.

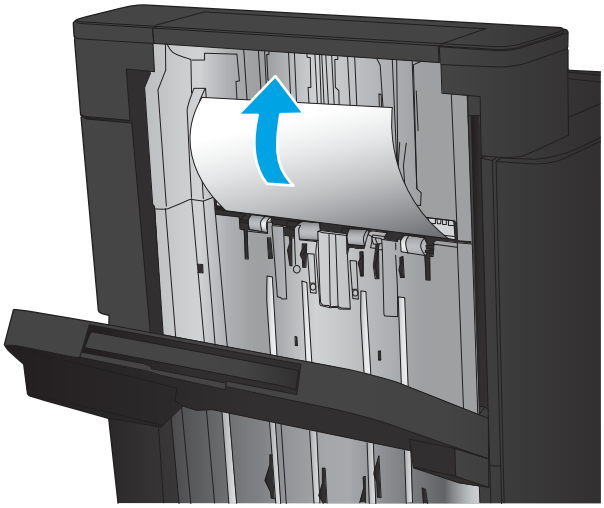

2. Wait three seconds, and then open the front left door.

3. Pull the staple cartridge up and out to remove it.

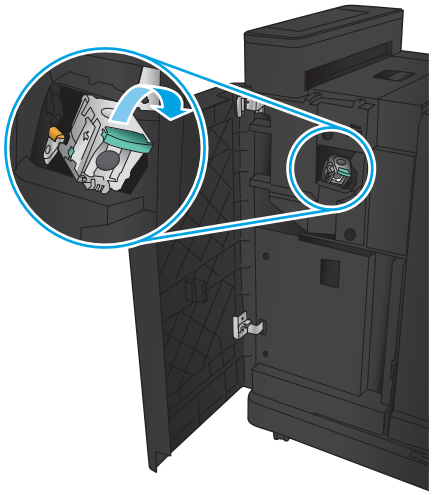

4. Lift up the metal handle on the front of the staple cartridge.

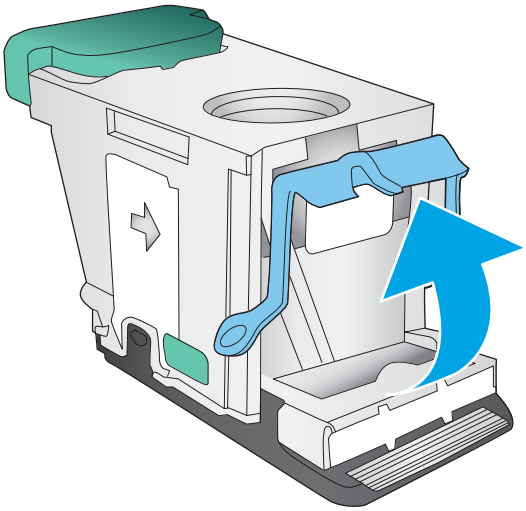

5. Remove any jammed staples from the staple cartridge.

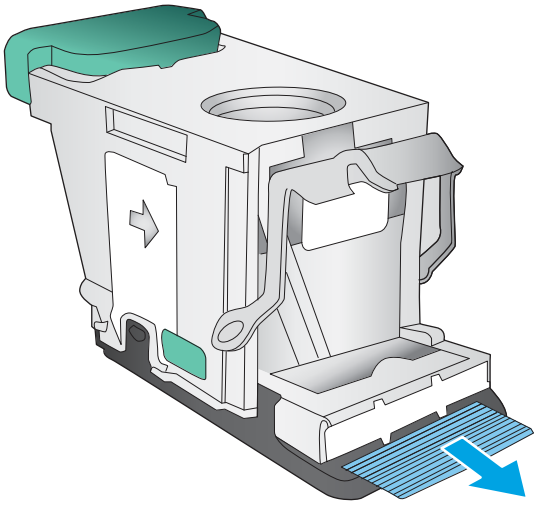

6. Push down the metal handle on the front of the staple cartridge.

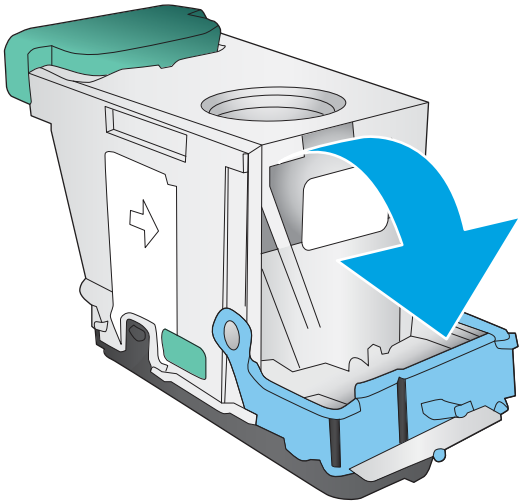

7. Insert the staple cartridge. Press down on the top of the staple cartridge until it clicks into place.

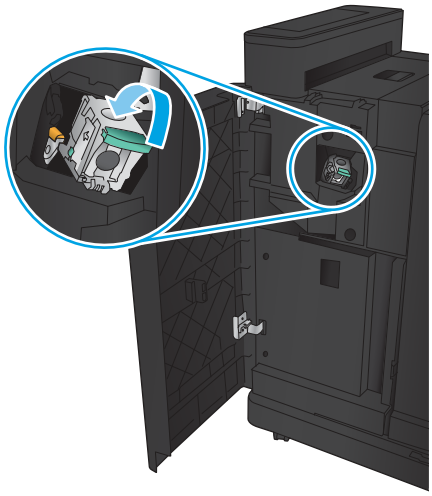

8. Close the front left door.

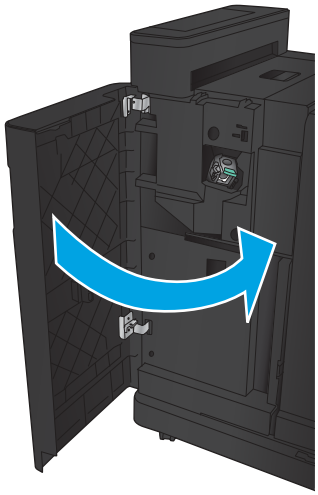

Clear jams in the booklet maker accessory

- Clear jams in the front left door of the booklet maker
- Clear connection jams
- Clear Staple 1 jams
- Clear staple jams in the booklet maker

Clear jams in the front left door of the booklet maker

1. Open the front left door.

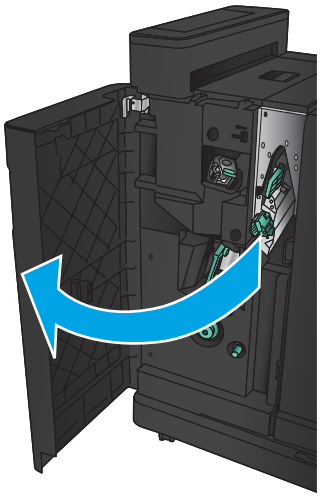

2. Move the lower jam-release lever to the right, and then remove any paper.

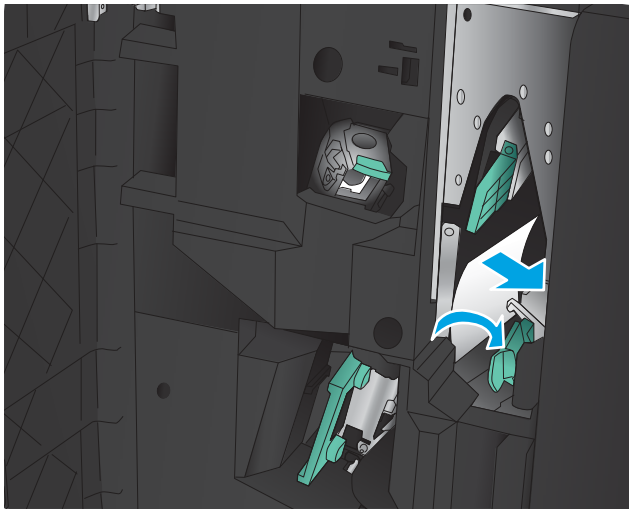

3. Move the lower jam-release handle to the left.

4. Move the upper jam-release handle to the right, and then remove any paper.

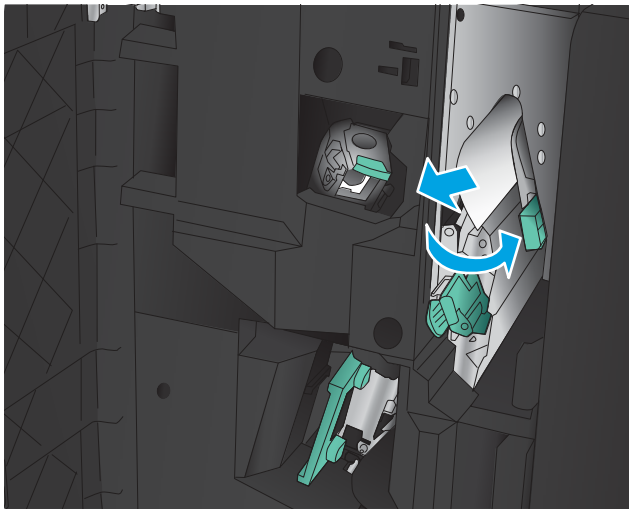

5. Move the upper jam-release handle to the left.
6. Open the lower booklet door.

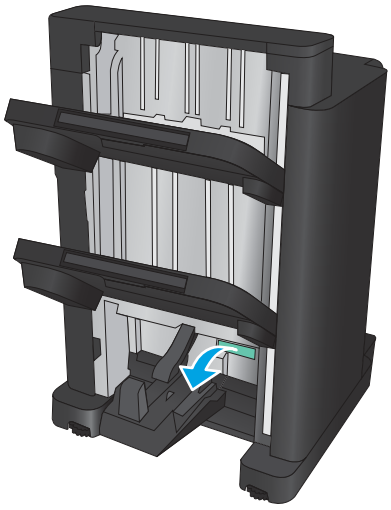

7. Turn the lower jam-release knob counter-clockwise.

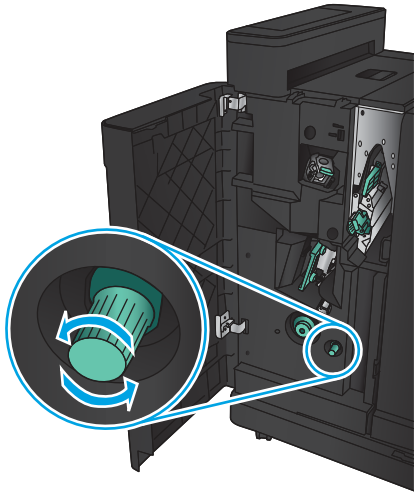

8. Press the jam-release knob, and then turn it clockwise.

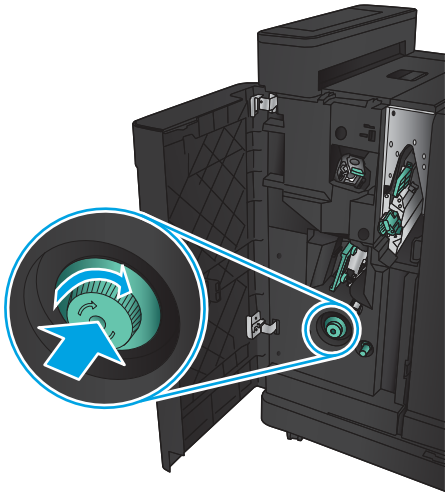

9. Remove all paper from the lower booklet door area, and then close the door.

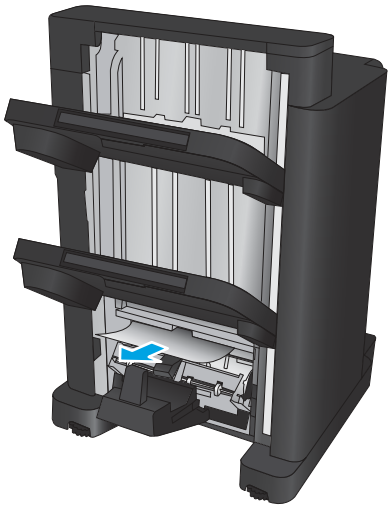

10. Close the front left door.

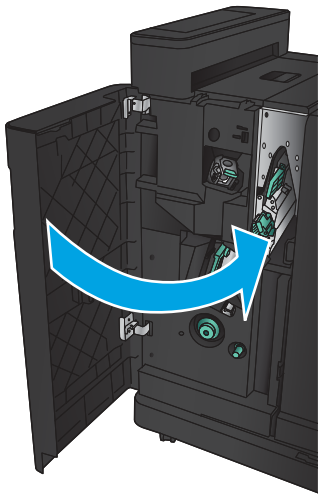

Clear connection jams

1. Pull the release handle on the top of the finishing accessory, and then slide the finisher away from the product until it stops.

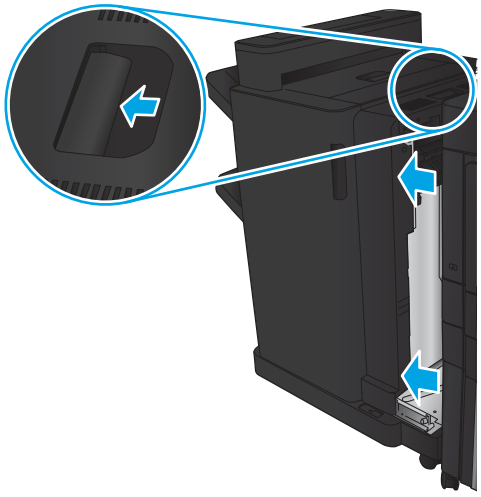

2. Remove any paper from the area.

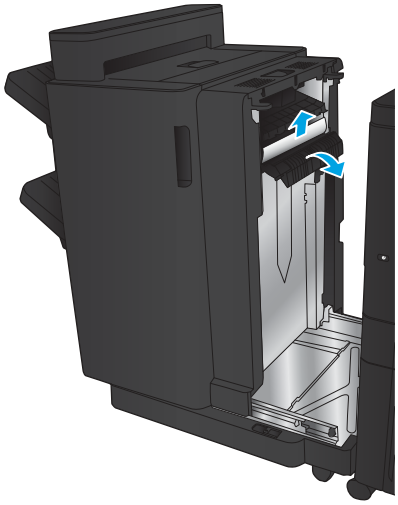

3. Attach the finishing accessory.

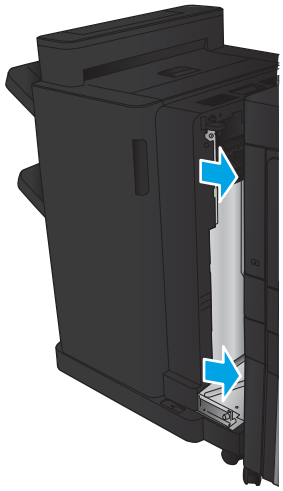

Clear Staple 1 jams

1. Lift the jam access cover for the output slot, and gently remove any jammed paper.

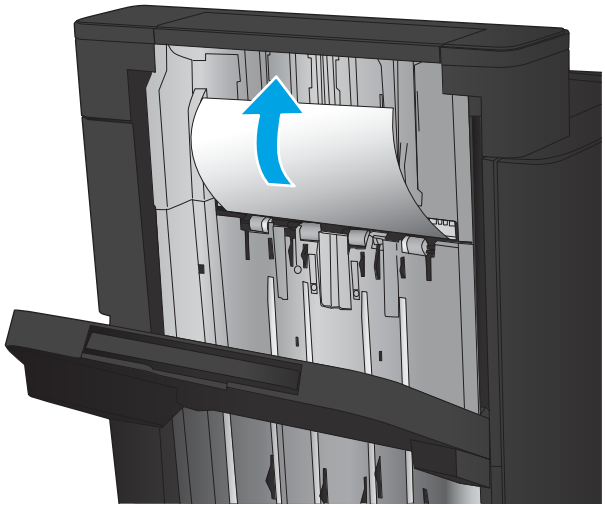

2. Wait three seconds, and then open the front left door.

3. Pull the staple cartridge up and out to remove it.

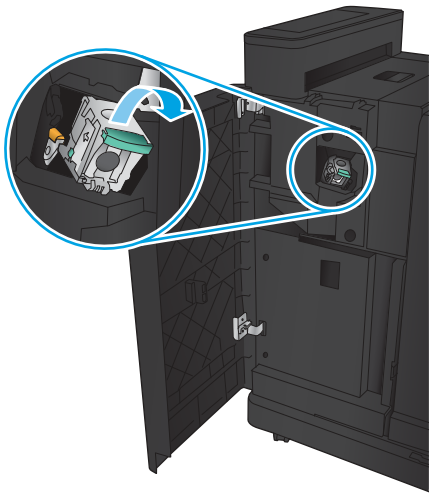

4. Lift up the metal handle on the front of the staple cartridge.

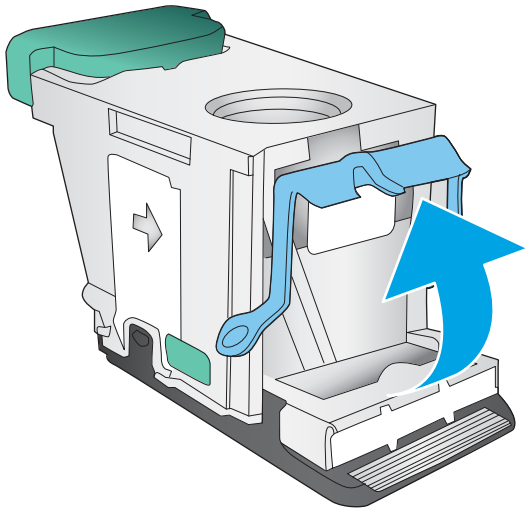

5. Remove any jammed staples from the staple cartridge.

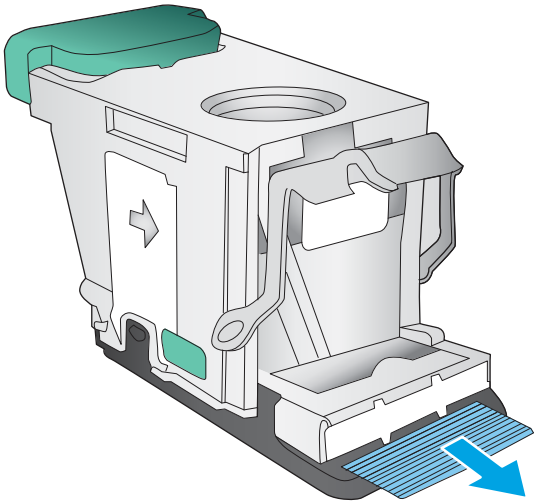

6. Push down the metal handle on the front of the staple cartridge.

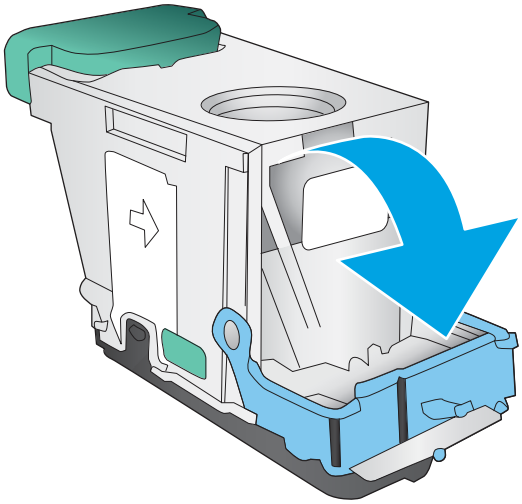

7. Insert the staple cartridge. Press down on the top of the staple cartridge until it clicks into place.

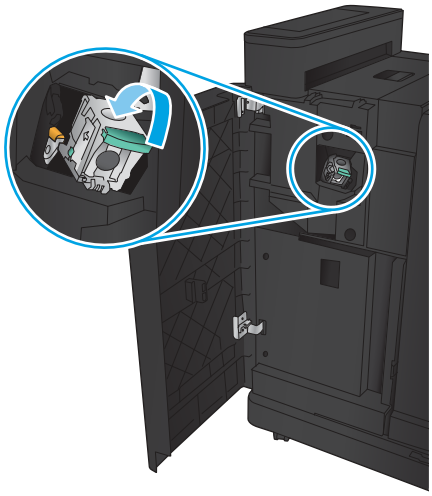

8. Close the front left door.

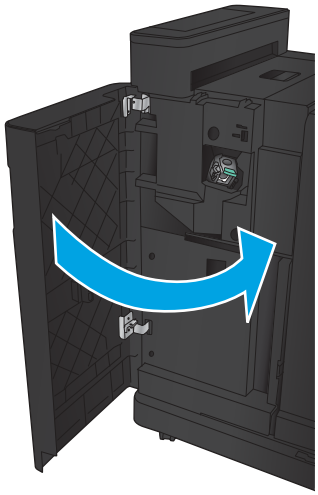

Clear staple jams in the booklet maker

1. Open the front left door.

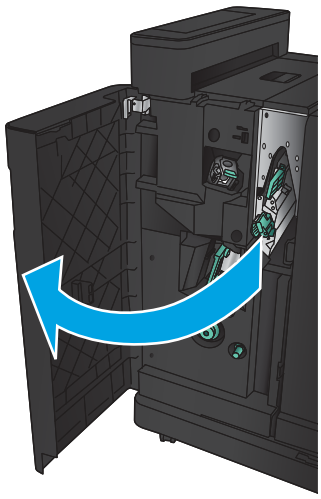

2. Move the lower delivery guide handle to the right, and then remove any paper.

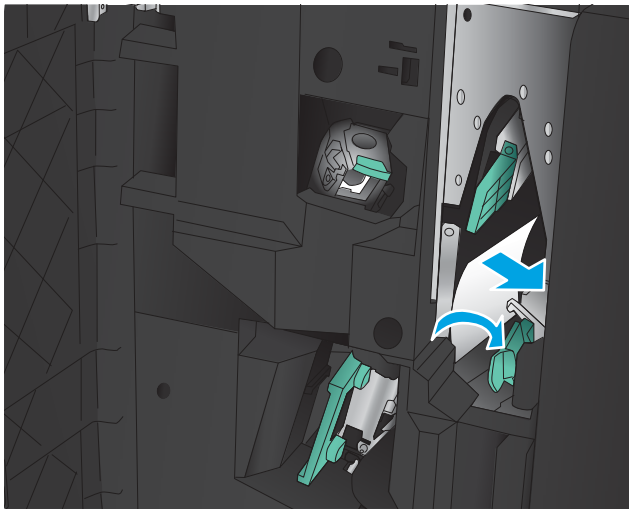

3. Move the lower delivery guide handle to the left.

4. Grasp the green handle and pull the staple carriage out.

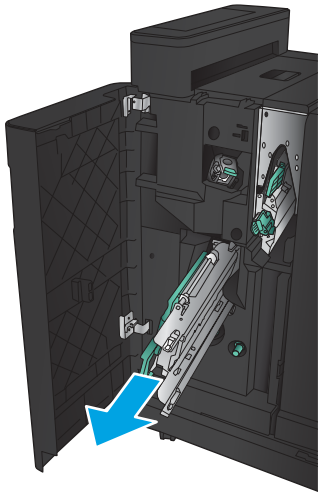

5. Pull the green handle of the stapler unit toward you and rotate it upward. Push the handle in to lock it in the open position.

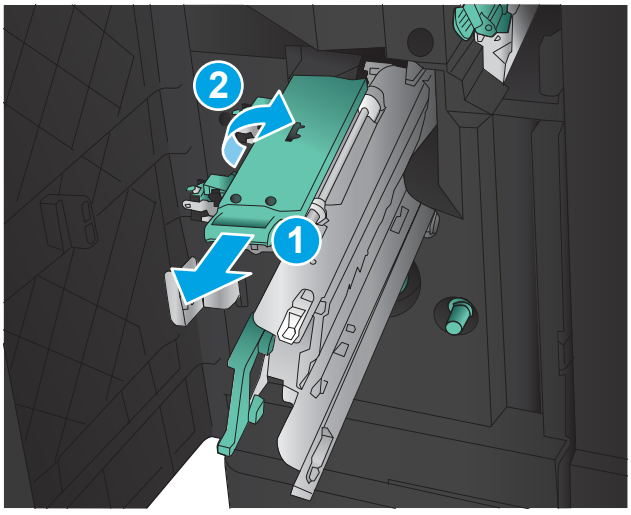

6. Grasp the edges of each staple cartridge and firmly pull up to remove the staple cartridges from the staple cartridge unit.

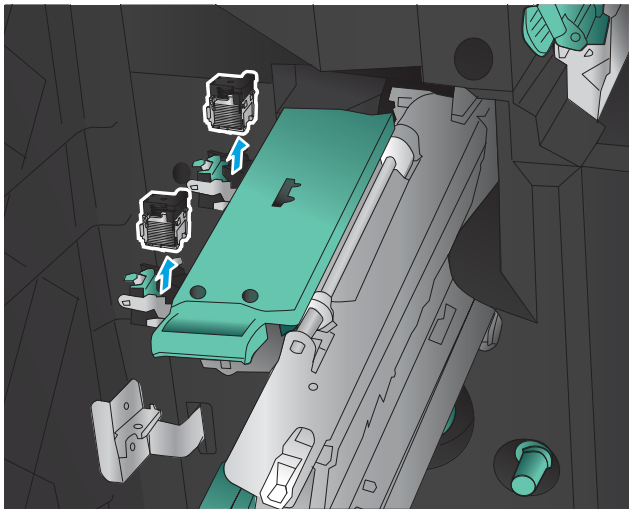

7. Press down on the jam-release at the back of the saddle-staple cartridge, push up on the plate at the front of the cartridge, and then remove any jammed staples.

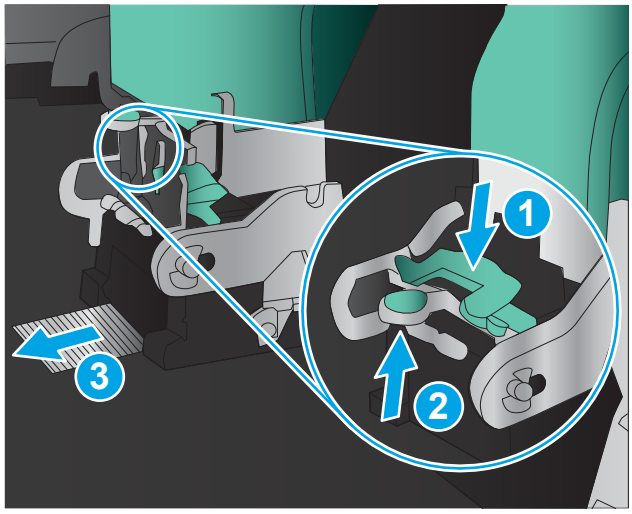

8. Press down on the front of the saddle-staple cartridge close it.

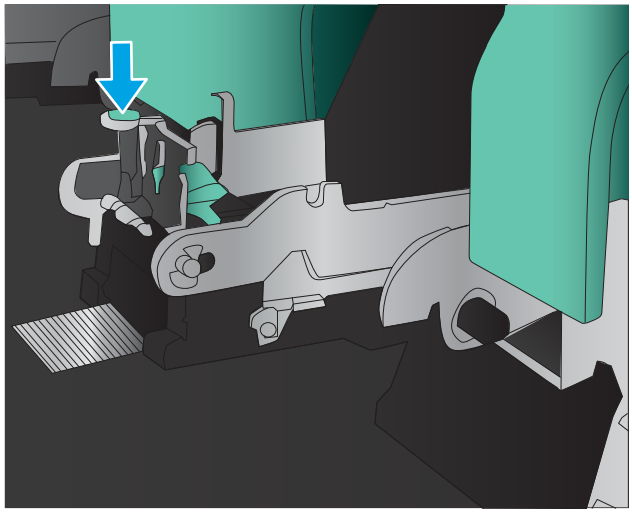

9. Insert the staple cartridges.

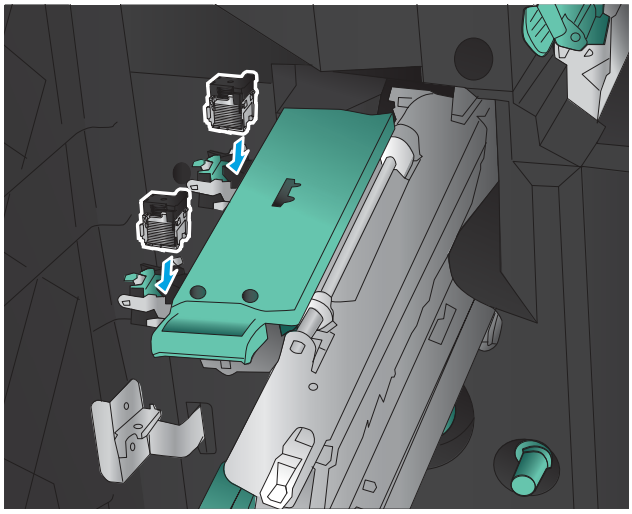

10. Pull the handle of the staple cartridge unit toward you and rotate it downward to its original position. Lock it into position by pushing in the handle.

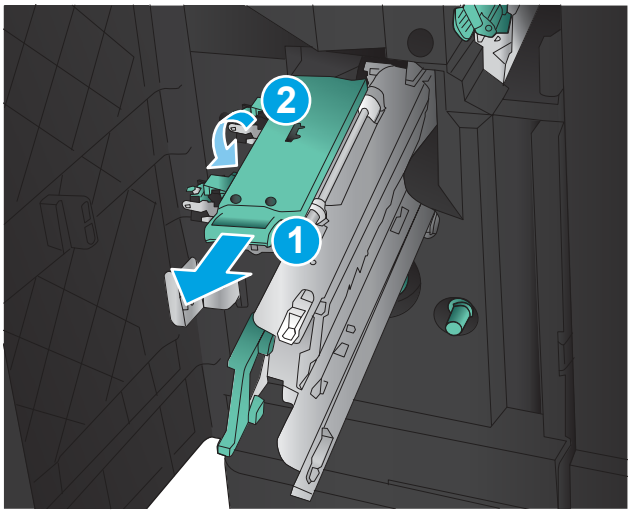

11. Push the saddle-stitch carriage in.

NOTE: If the saddle-stitch carriage does not easily slide into the finisher, the staple unit is not closed properly. Pull the saddle-stitch carriage out of the finisher and reseat the stapler unit.

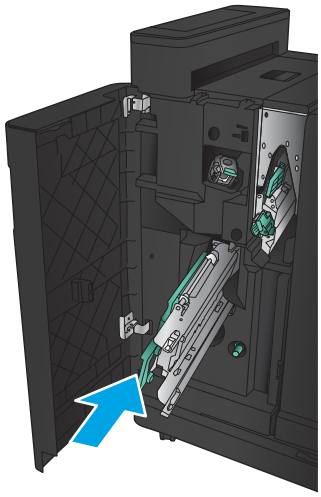

12. Close the front left door.

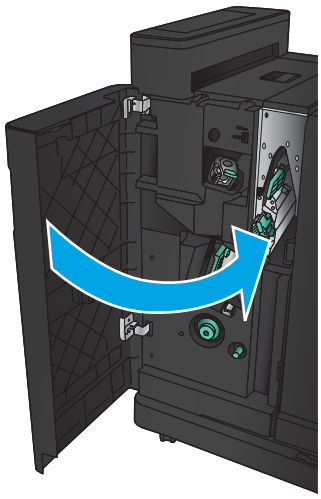

Paper feeds incorrectly or becomes jammed

- The product does not pick up paper
- The product picks up multiple sheets of paper
- The document feeder jams, skews, or picks up multiple sheets of paper (M830)
- Prevent paper jams

The product does not pick up paper

If the product does not pick up paper from the tray, try these solutions.

1. Open the product and remove any jammed sheets of paper.
2. Load the tray with the correct size of paper for your job.
3. Make sure the paper size and type are set correctly on the product control panel.
4. Make sure the paper guides in the tray are adjusted correctly for the size of paper. Adjust the guides to the appropriate indentation in the tray.
5. Check the product control panel to see if the product is waiting for you to acknowledge a prompt to feed the paper manually. Load paper, and continue.
6. The rollers above the tray might be contaminated. Clean the rollers with a lint-free cloth dampened with warm water.

The product picks up multiple sheets of paper

If the product picks up multiple sheets of paper from the tray, try these solutions.

1. Remove the stack of paper from the tray and flex it, rotate it 180 degrees, and flip it over. *Do not fan the paper.* Return the stack of paper to the tray.
2. Use only paper that meets HP specifications for this product.
3. Use paper that is not wrinkled, folded, or damaged. If necessary, use paper from a different package.
4. Make sure the tray is not overfilled. If it is, remove the entire stack of paper from the tray, straighten the stack, and then return some of the paper to the tray.
5. Make sure the paper guides in the tray are adjusted correctly for the size of paper. Adjust the guides to the appropriate indentation in the tray.
6. Make sure the printing environment is within recommended specifications.

The document feeder jams, skews, or picks up multiple sheets of paper (M830)

- The original might have something on it, such as staples or self-adhesive notes, that must be removed.
- Check that all rollers are in place and that the roller-access cover inside the document feeder is closed.
- Make sure that the top document-feeder cover is closed.

- The pages might not be placed correctly. Straighten the pages and adjust the paper guides to center the stack.
- The paper guides must be touching the sides of the paper stack to work correctly. Make sure that the paper stack is straight and the guides are against the paper stack.
- The document feeder input tray or output bin might contain more than the maximum number of pages. Make sure the paper stack fits below the guides in the input tray, and remove pages from the output bin.
- Verify that there are no pieces of paper, staples, paper clips, or other debris in the paper path.
- Clean the document-feeder rollers and the separation pad. Use compressed air or a clean, lint-free cloth moistened with warm water. If misfeeds still occur, replace the rollers.
- From the Home screen on the product control panel, scroll to and touch the Supplies button. Check the status of the document-feeder kit, and replace it if necessary.

Prevent paper jams

To reduce the number of paper jams, try these solutions.

1. Use only paper that meets HP specifications for this product.
2. Use paper that is not wrinkled, folded, or damaged. If necessary, use paper from a different package.
3. Use paper that has not previously been printed or copied on.
4. Make sure the tray is not overfilled. If it is, remove the entire stack of paper from the tray, straighten the stack, and then return some of the paper to the tray.
5. Make sure the paper guides in the tray are adjusted correctly for the size of paper. Adjust the guides so they are touching the paper stack without bending it.
6. Make sure that the tray is fully inserted in the product.
7. If you are printing on heavy, embossed, or perforated paper, use the manual feed feature and feed sheets one at a time.
8. From the Home screen on the product control panel, scroll to and touch the Trays button. Verify that the tray is configured correctly for the paper type and size.
9. Make sure the printing environment is within recommended specifications.

Use manual print modes

Try the following manual print modes to see if they solve the image-quality problems.

Select a manual print mode

1. From the Home screen on the product control panel, scroll to and touch the Administration button.
2. Open the following menus:
   - General Settings
   - Print Quality
   - Adjust Paper Types
3. Select a paper type, and then select the mode to adjust.
4. Select a value for the mode, and then touch the Save button.

Table 2-58 Print modes under the Adjust Paper Types submenu

Print Mode	• Plain • Light 60-74g • Mid-Weight 96-110g • Heavy 111-130g • Extra Heavy 131-175g • Cardstock 176-220g • Mono Transparency • Labels • Letterhead • Envelope • Heavy Envelope • Preprinted • Prepunched • Colored • Bond • Recycled • Restore Modes NOTE: Not all print modes are available for all paper types.
Resistance Mode	Set to Up to resolve print-quality issues caused by poor secondary transfer in low-humidity environments with resistive or rough surface paper.

Table 2-58 Print modes under the Adjust Paper Types submenu (continued)

Humidity Mode	With glossy film, set to High when the product is in a high-humidity environment and print-quality defects occur on HP Tough Paper or Opaque film. With transparencies, set to High when the product is in a high-humidity environment and print-quality defects occur on color transparencies on the first page of a print job. With all other paper types, set to High when the product is in a high-humidity environment and light density occurs on the first page of a print job.
Pre-Rotation Mode	Set to On when horizontal banding occurs with the drum pitch.
Fuser Temp Mode	If you are seeing a faint image of the page repeated at the bottom of the page or on the following page, first make sure the paper type (Adjust Paper Types menu) and Print Mode settings are correct for the type of paper you are using. If you continue to see ghost images on your print jobs, set the Fuser Temp feature to one of these settings. Normal Up Down
Paper Curl Mode	Use in high-humidity and high-temperature environments. The Alternate setting decreases fuser temperature and increases the interpage gap.

Table 2-59 MP modes under the Optimize submenu

Environment	Set to Normal if the product is operating in a low-temperature environment and you are having problems with print quality such as blisters in the printed image.
Background	Set to Alternate when a background occurs all over the page.
Pre Rotation	Set to Alternate when horizontal banding occurs with the drum pitch.
Line Detail	Set to Alternate when color misregistration occurs.
Moisture Control	
Restore Optimize	Use this item to reset the menu defaults.

Solve image quality problems

Often print-quality problems can be resolved easily by making sure that the product is maintained, using paper that meets HP specifications, or running a cleaning page.

Image defects table

The following examples depict letter-size paper that has passed through the product short-edge first. These examples illustrate problems that would affect all the pages that you print, whether you print in color or in black only.

Table 2-60 Image defects table

Problem	Sample	Cause	Solution
Print is light or faded on entire page.		Poor secondary transfer roller contact with the roller shaft.	Clean the contacts. If the problem remains after cleaning, check the contacts for damage. Replace any deformed or damaged parts.
Print is too dark.		Poor drum grounding contact with the toner cartridge.	Clean the contacts. If the problem remains after cleaning, check the contacts for damage. Replace any deformed or damaged parts.
		Poor primary charging bias contacts with the toner cartridge.	
The page is all black.		Poor primary charging bias contacts with the toner cartridge.	Clean the contacts. If the problem remains after cleaning, check the contacts for damage. Replace any deformed or damaged parts.
		The primary charging bias roller is damaged.	
Page is blank.	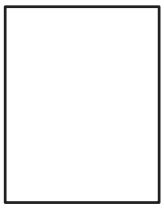	The laser shutter open-close projection on the toner cartridge is damaged.	Replace the toner cartridge.
		The laser shutter arm or laser shutter is not working or damaged.	Replace any deformed or damaged parts.
		Poor developing bias contacts with the toner cartridge.	Clean the contacts. If the problem remains after cleaning, check the contacts for damage. Replace any deformed or damaged parts.

Table 2-60 Image defects table (continued)

Problem	Sample	Cause	Solution
White spots appear in the image.	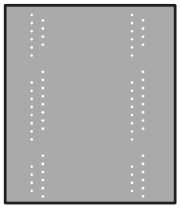	The static charge eliminator is dirty.	Clean the static eliminator.
		The secondary transfer roller is deformed or has deteriorated.	Replace the secondary transfer roller assembly.
		Poor secondary transfer roller contact with the roller shaft.	Clean the contact. If the problem remains after cleaning replace the secondary transfer roller assembly.
The back of the page is dirty.	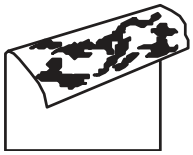	The secondary transfer roller is dirty.	Replace the secondary transfer roller.
		The fuser inlet guide or separation guide is dirty.	Clean the dirty parts. If the dirt does not come off, replace the guide.
		The pressure roller is dirty.	Run the cleaning page several times. If the issue persists, replace the fuser.
Vertical streaks or bands appear on the page.	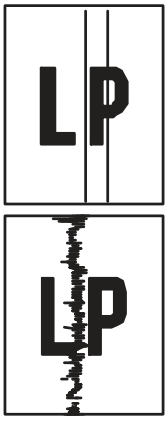	Scratches are present on the circumference of the developing cylinder or photosensitive drum.	Replace the toner cartridge.
		Scratches are present on the circumference of the fuser roller.	Replace the fuser.
Vertical white lines appear on the page.	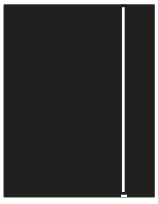	A unknown substance has adhered to the laser beam window	Remove any unknown substances.
		Scratches are present on the circumference of the developing roller or photosensitive drum.	Replace the toner cartridge.
		M830 product only: White scratch down the page could mean the scanner glass needs to be cleaned.	Clean the glass.

Table 2-60 Image defects table (continued)

Problem	Sample	Cause	Solution
Horizontal lines appear on the page.		Repetitive horizontal lines appear.	Use the repetitive defects ruler to identify the dirty roller. Clean the roller. If the roller cannot be cleaned, replace the fuser.
		Horizontal scratches are present on the photosensitive drum.	Replace the toner cartridge.
		Horizontal scratches are present on the fuser roller.	Replace the fuser.
A horizontal white line displays on the page.	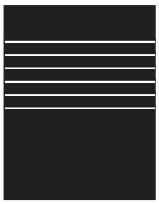	Repetitive horizontal white lines appear.	Use the repetitive defects ruler to identify the dirty roller. Clean the roller. If the roller cannot be cleaned, replace the roller.
		Horizontal scratches are present on the photosensitive drum.	Replace the toner cartridge.
Dropouts appear.		The secondary transfer roller is deformed or has deteriorated.	Replace the secondary-transfer-roller.
		The primary charging roller, developing roller, or photosensitive drum is deformed or has deteriorated.	Replace the toner cartridge.
		The fuser roller is deformed or has deteriorated.	Replace the fuser.
		The high-voltage power-supply PCA is defective (no transfer bias output).	Replace the high-voltage power-supply (HVPS).
The toner is not fully fused to the paper.	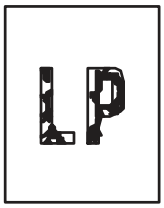	The fuser roller or pressure roller is scarred or deformed.	Replace the fuser.
		The fuser control circuit is defective.	Replace the low-voltage power supply (LVPS).
		The thermistor is defective.	Replace the fuser.
		The fuser heater is defective.	
Toner smears appear on the paper.	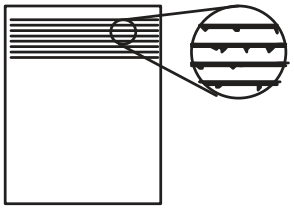	The product has residual paper.	Remove the residual paper.
		The fuser inlet guide is dirty.	Clean the fuser inlet guide.

Table 2-60 Image defects table (continued)

Problem	Sample	Cause	Solution
The printed page contains misformed characters.		The product is experiencing page skew.	See the “Text or graphics are skewed on the printed page” row in this table.
		The laser/scanner unit is defective.	Replace the laser/scanner assembly.
Text or graphics are skewed on the printed page.		The registration shutter spring is unhooked.	Check the spring and place it in the correct position.
		The registration shutter spring is deformed.	Replace the registration assembly.
The printed page contains wrinkles or creases.	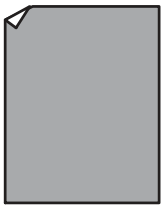	The roller or paper feed guide is dirty.	Clean any dirty components.
		A feed roller is deformed or has deteriorated.	Replace any deformed or deteriorated rollers.
		The paper feed guide is damaged.	Replace the paper-feed-guide unit.
The front of the page is dirty.		The photosensitive drum is dirty.	Replace the toner cartridge.
		The fuser roller or pressure roller is dirty.	Execute a Pressure roller clean mode procedure. If the dirt does not come off, replace the fuser. NOTE: Cleaning the fuser with HP tough paper provides better results than with plain paper. You might need to execute the cleaning process several times to remove all contaminants on the fuser.
Repetitive horizontal lines appear.	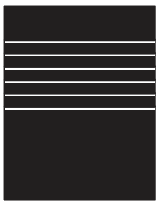		See repetitive image defect ruler. Clean the indicated roller. If the contaminant does not come off, replace appropriate roller or assembly.
Pages have flecks of toner on them.	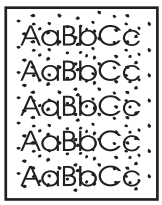		Execute a cleaning page to clean the contaminant off the fuser. The cleaning page might need to be run several time to clean the fuser. Do not replace the fuser. NOTE: Cleaning the fuser with HP tough paper provides better results than with plain paper. You might need to execute the cleaning process several times to remove all contaminants on the fuser.

Table 2-60 Image defects table (continued)

Problem	Sample	Cause	Solution
Vertical density variations appear on the page.		The surface of the photosensitive drum has deteriorated.	Replace the toner cartridge.
		The laser/scanner is defective.	Replace the laser/scanner assembly
Repetitive white spots appear in the image.	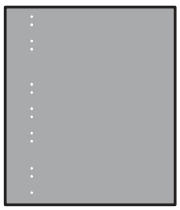	Repetitive white spots appear in the image.	See repetitive image defect ruler. Clean the indicated roller. If the contaminant does not come off, replace appropriate roller or assembly.
		The secondary transfer roller is deformed or has deteriorated.	Replace the secondary transfer roller assembly.
		An unknown substance has adhered to the primary charging roller or photosensitive drum.	Replace the toner cartridge.

Clean the product

Over time, particles of toner and paper accumulate inside the product. This can cause print-quality problems during printing. Cleaning the product eliminates or reduces these problems.

Clean the paper path and print-cartridge areas every time that you change the toner cartridge or whenever print-quality problems occur. As much as possible, keep the product free from dust and debris.

To clean the product exterior, use a soft, water-moistened cloth.

Print a cleaning page

Print a cleaning page to remove dust and excess toner from the fuser if you are having any of the following problems:

- Specks of toner are on the printed pages.
- Toner is smearing on the printed pages.
- Repeated marks occur on the printed pages.

Use the following procedure to print a cleaning page.

1. From the Home screen on the product control panel, scroll to and touch the Device Maintenance button.
2. Open the following menus:
   - Calibration/Cleaning
   - Cleaning Page
3. Touch the Print button to print the page.
4. The cleaning process can take several minutes. When it is finished, discard the printed page.

Check the scanner glass for dirt or smudges (M830)

Over time, specks of debris might collect on the scanner glass and white plastic backing which can affect performance. Use the following procedure to clean the scanner glass and white plastic backing.

1. Press the power button to turn off the product, and then disconnect the power cable from the electrical outlet.

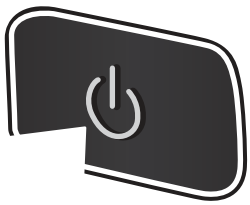

2. Open the scanner lid. Align paper that has copy defects with the scanner glass to identify the locations of dirt or smudges.

3. Clean the main scanner glass (callout 1), the document-feeder glass (the small strip of glass on the left side of the scanner, callout 2), and the white backing (callout 3). Use a soft cloth or sponge that has been moistened with nonabrasive glass cleaner. Dry the glass and white plastic backing by using a chamois or a cellulose sponge to prevent spotting.

   CAUTION: Do not use abrasives, acetone, benzene, ammonia, ethyl alcohol, or carbon tetrachloride on any part of the product; these can damage the product. Do not place liquids directly on the glass or platen. They might seep and damage the product.

   NOTE: If you are having trouble with streaks on copies when you are using the document feeder, be sure to clean the small strip of glass on the left side of the scanner.

   NOTE: See this English-language video for a demonstration of how to identify and clean debris that causes streaks on copies: www.youtube.com/watch?v=CGn7FJvH8sE.

4. Connect the power cable to an outlet, and then press the power button to turn on the product.

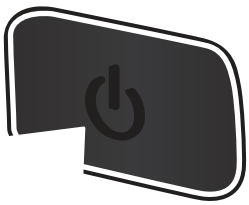

Clean the pickup rollers and separation pad in the document feeder (M830)

1. Lift the document-feeder latch.

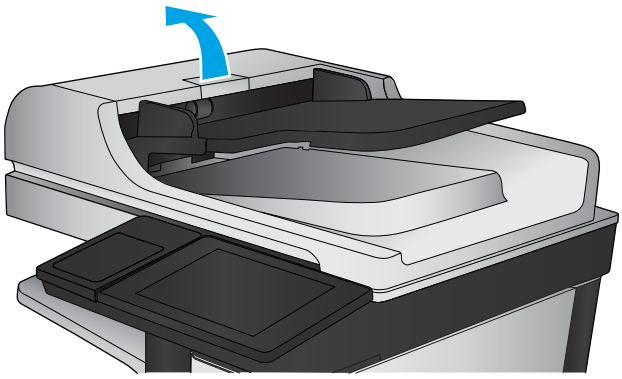

2. Open the document-feeder cover.

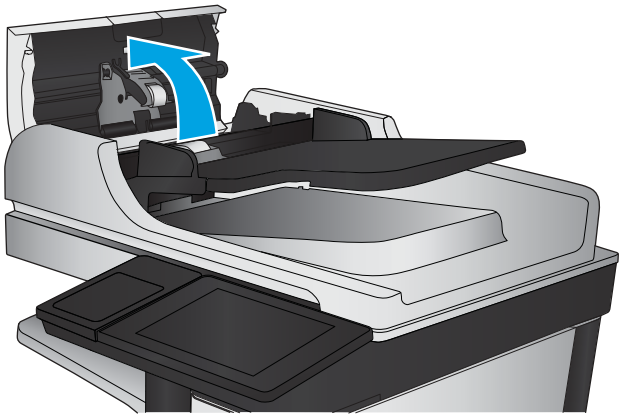

3. Remove any visible lint or dust from each of the feed rollers and the separation pad using compressed air or a clean lint-free cloth moistened with warm water.

   NOTE: Lift up the roller assembly so you can clean the second roller.

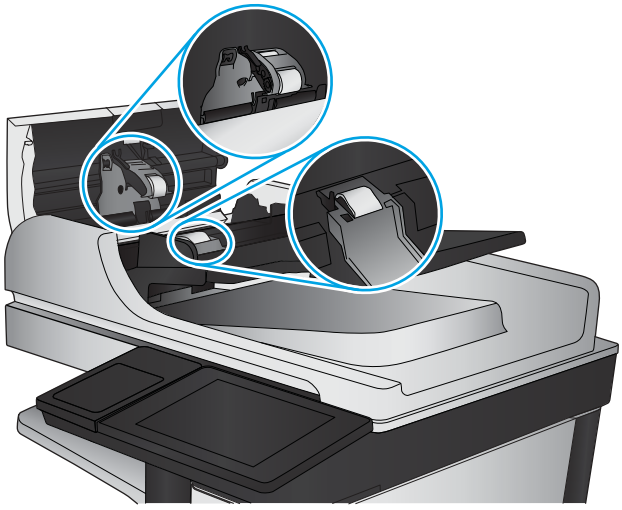

4. Close the document-feeder cover.

Solve performance problems

Table 2-61 Solve performance problems

Problem	Cause	Solution
Pages print but are totally blank.	The document might contain blank pages.	Check the document that you are printing to see if content displays on all of the pages.
	The product might be malfunctioning.	To check the product, print a Configuration page.
Pages print very slowly.	Heavier paper types can slow the print job.	Print on a different type of paper.
	Complex pages can print slowly.	Proper fusing might require a slower print speed to ensure the best print quality.
	Large batches, narrow paper, and special paper such as gloss, transparency, cardstock, and HP Tough Paper can slow the print job.	Print in smaller batches, on a different type of paper, or on a different size of paper.
Pages did not print.	The product might not be pulling paper correctly.	Make sure paper is loaded in the tray correctly.
	The paper is jamming in the product.	Clear the jam.
	The USB cable might be defective or incorrectly connected.	• Disconnect the USB cable at both ends and reconnect it. • Try printing a job that has printed in the past. • Try using a different USB cable.
	Other devices are running on your computer.	The product cannot share a USB port. If you have an external hard drive or network switchbox that is connected to the same port as the product, the other device might be interfering. To connect and use the product, you must disconnect the other device or you must use two USB ports on the computer.

Solve connectivity problems

Solve USB connection problems

If you have connected the product directly to a computer, check the cable.

- Verify that the cable is connected to the computer and to the product.
- Verify that the cable is not longer than 2 m (6.65 ft). Try using a shorter cable.
- Verify that the cable is working correctly by connecting it to another product. Replace the cable if necessary.

Solve wired network problems

Check the following items to verify that the product is communicating with the network. Before beginning, print a configuration page from the product control panel and locate the product IP address that is listed on this page.

- Poor physical connection
- The computer is using the incorrect IP address for the product
- The computer is unable to communicate with the product
- The product is using incorrect link and duplex settings for the network
- New software programs might be causing compatibility problems
- The computer or workstation might be set up incorrectly
- The product is disabled, or other network settings are incorrect

NOTE: HP does not support peer-to-peer networking, as the feature is a function of Microsoft operating systems and not of the HP print drivers. For more information, go to Microsoft at www.microsoft.com.

Poor physical connection

1. Verify that the product is attached to the correct network port using a cable of the correct length.
2. Verify that cable connections are secure.
3. Look at the network port connection on the back of the product, and verify that the amber activity light and the green link-status light are lit.
4. If the problem continues, try a different cable or port on the hub.

The computer is using the incorrect IP address for the product

1. Open the printer properties and click the **Ports** tab. Verify that the current IP address for the product is selected. The product IP address is listed on the product configuration page.
2. If you installed the product using the HP standard TCP/IP port, select the box labeled **Always print to this printer, even if its IP address changes**.

3. If you installed the product using a Microsoft standard TCP/IP port, use the hostname instead of the IP address.

4. If the IP address is correct, delete the product and then add it again.

The computer is unable to communicate with the product

1. Test network communication by pinging the network.

   a. Open a command-line prompt on your computer. For Windows, click **Start**, click **Run**, type `cmd`, and then press Enter.

   b. Type `ping` followed by the IP address for your product.

      For Mac OS X, open the Network Utility, and then supply the IP address in the correct field in the **Ping** pane.

   c. If the window displays round-trip times, the network is working.

2. If the ping command failed, verify that the network hubs are on, and then verify that the network settings, the product, and the computer are all configured for the same network.

The product is using incorrect link and duplex settings for the network

Hewlett-Packard recommends leaving these settings in automatic mode (the default setting). If you change these settings, you must also change them for your network.

New software programs might be causing compatibility problems

Verify that any new software programs are correctly installed and that they use the correct print driver.

The computer or workstation might be set up incorrectly

1. Check the network drivers, print drivers, and the network redirection settings.

2. Verify that the operating system is configured correctly.

The product is disabled, or other network settings are incorrect

1. Review the configuration page to check the status of the network protocol. Enable it if necessary.

2. Reconfigure the network settings if necessary.

Service mode functions

Service menu

The Service menu is PIN-protected for added security. Only authorized service people have access to the Service menu. When you select Service from the list of menus, the product prompts you to enter an eight-digit personal identification number (PIN).

NOTE: The product automatically exits the Service menu after about one minute if no items are selected or changed.

1. From the Home screen on the product control panel, scroll to and touch the Device Maintenance button.
2. Open the Service menu.
3. On the sign-in screen, select Service Access Code from the drop-down list.
4. Enter one of the following service access code for your product:
   - **M806**: 10080613
   - **M830**: 10083013

The following menu items appear in the Service menu:

First level	Second level	Value	Description
Print Event log			Allows you to print or view the product event log.
View Event log			
Clear Event Log			Use this item to clear the product event log.
Cycle Counts	Total Engine Cycles		Set the page count that was stored in NVRAM prior to installing a new formatter.
	Refurbish Cycle Count		Use this item to record the page count when the product was refurbished.
	Document Feeder Kit Count NOTE: M830 product only.		Total number of pages since the document feeder kit was replaced.
	Document Feeder Kit Interval NOTE: M830 product only.		Use this item to set the interval that causes the product to prompt the customer to replace document feeder maintenance kit.
	Clean Rollers Count NOTE: M830 product only.		Total number of pages since the document feeder rollers were cleaned.

First level	Second level	Value	Description
	Clean Rollers Interval NOTE: M830 product only.		Use this item to set the interval that causes the product to prompt the customer to clean the document feeder rollers and separation pad.
	ADF Count NOTE: M830 product only.		Set the total pages fed through the document feeder.
	Flatbed Count NOTE: M830 product only.		Set the total pages scanned from the flatbed.
	ADF Simplex Count NOTE: M830 product only.		Set the total single-sided pages fed through the document feeder.
	ADF Duplex Count NOTE: M830 product only.		Set the total two-sided pages fed through the document feeder.
	Copy Scan Count NOTE: M830 product only.		Set the total copy pages that have been scanned.
	Send Scan Count NOTE: M830 product only.		Set the number of scanned pages sent to email.
	Fax Scan Count NOTE: FAX models only.		Set the number of scanned pages that have been faxed.
	Copy Pages Count NOTE: M830 product only.		Set the number of scanned pages that have been printed.
Scanner Settings NOTE: M830 product only.	ADF Settings	Leading-edge Trailing-edge Left Side Front Left Side Back	Set the calibration values. WARNING! Do not change these values unless instructed to do so.
	Glass Settings	Leading edge glass Left Side Glass	
Serial Number			Set the serial number.

First level	Second level	Value	Description
Service ID			Use this item to show the date that the product was first used on the control panel. This eliminates the need for users to keep paper receipts for proof of warranty.
Cold Reset Paper			When you perform a cold reset, the paper size that is stored in NVRAM is reset to the default factory setting. If you replace a formatter board in a country/region that uses A4 as the standard paper size, use this menu to reset the default paper size to A4. LETTER and A4 are the only available values.
New Registration Roller		Yes No	Reset the counter for the registration roller after replacing the registration assembly.
Media Sensor Value			Use this item to record the media sensor value found on a replacement paper pickup assembly.
PTT Test Mode NOTE: FAX models only.			Test the internal modem for the analog fax accessory.
	Hook Operations	Off Hook On Hook	
	Generate Random Data	Select a value from the list.	
	Generate DTMF Tone Burst	Select a value from the list.	
	Generate DTMF Continuous Tone	Select a value from the list.	
	Generate Pulse Burst	Select a value from the list.	
	Generate Tone Dial Number	Enter dial number.	
	Generate Pulse Dial Number	Enter dial number.	

First level	Second level	Value	Description
	Generate Single Modem Tone	Range: 1100–2100 Hz Default = 2100 Hz	
	Line Measurements		
	Fax Transmit Signal Loss		
Test Support	Continuous Scan NOTE: M830 product only.	2-sided Save to Disk	
	Continuous Copy	2-sided Save to Disk	
	Raw Scan NOTE: M830 product only.	2-sided Mechanical Calibration	
	Continuous Print from USB		
	Automatic Calibrations	Disabled Enabled*	
	Runtime Configuration	MercStine Standard StandardEIC Workflow WorkflowEIC Reconfigure	

Product resets

Restore factory-set defaults

1. From the Home screen on the product control panel, scroll to and touch the Administration button.
2. Open the following menus:
   - General Settings
   - Restore Factory Settings
3. A verification message advises that completing the reset function might result in loss of data. Touch the Reset button to complete the process.

NOTE: The product restarts automatically after the reset operation completes.

Restore the service ID

Restore the service ID

If you replace the formatter, the date is lost. Use this menu item to reset the date to the original date that the product was first used. The date format is YYDDD. Use the following formula to calculate the dates:

1. To calculate YY, subtract 1990 from the calendar year. For instance, if the product was first used in 2002, calculate YY as follows: 2002 - 1990 = 12. YY = 12.
2. Subtract 1 from 10 (October is the tenth month of the year): 10 - 1 = 9.
   - Multiply 9 by 30: 9 x 30 = 270 or add 17 to 270: 270 + 17 = 287. Thus, DDD = 287.

Convert the service ID to an actual date

You can use the product Service ID number to determine whether the product is still under warranty. Use the following formula to convert the Service ID into the installation date as follows:

1. Add 1990 to YY to get the actual year that the product was installed.
2. Divide DDD by 30. If there is a remainder, add 1 to the result. This is the month.
3. The remainder from the calculation in step 2 is the date.

Using the Service ID 12287 as an example, the date conversion is as follows:

1. 12 + 1990 = 2002, so the year is 2002.
2. 287 divided by 30 = 9 with a remainder of 17. Because there is a remainder, add 1 to 9 to get 10, which represents October.
3. The remainder in step 2 is 17, so that is the date.
4. The complete date is 17-October-2002.

NOTE: A six-day grace period is built into the date system.

Product cold reset

Cold reset using the Preboot menu

1. Turn the product on.
2. The HP logo displays on the product control panel. When an underscore displays below the HP logo, touch the logo to open the Preboot menu.
3. Use the down arrow button to highlight Administrator, and then touch the OK button.
4. Use the down arrow button to highlight Startup Options item, and then touch the OK button.
5. Use the down arrow button to highlight the Cold Reset item, and then touch the OK button.
6. Touch the Home button to highlight Continue, and then touch the OK button.

NOTE: The product will initialize.

Format Disk and Partial Clean functions

Active and repository firmware locations

The firmware bundle consists of multiple parts. The main components are the Windows CE Operating System and the product/peripheral firmware files.

There are two locations/partitions on the hard drive where the firmware components are stored:

- The Active, where the Operating System and firmware currently are executing.
- The Repository, the recovery location.

If the Active location is damaged, or a Partial Clean was performed, the product automatically copies over the OS and firmware files from the Repository location and the product recovers.

If both the Active and Repository locations are damaged, or a Format Disk was performed, then both locations are gone and the error message **99.09.67** displays on the control-panel display. The user must upload the firmware to the product in order for it to function again.

CAUTION: The Format Disk option performs a disk initialization for the entire disk. The operating system, firmware files, and third party files (among other files) will be completely lost. HP does not recommend this action.

Partial Clean

The Partial Clean option erases all partitions and data on the disk drive, except for the firmware repository where a backup copy of the firmware file is stored. This allows the disk drive to be reformatted without having to download a firmware upgrade file to return the product to a bootable state.

Characteristics of a Partial Clean

- Customer-defined settings, third-party solutions, firmware files, and the operating system are deleted.
- Rebooting the product restores the firmware files from the Repository location, but does not restore any customer-defined settings.
- For previous HP products, a Hard Disk Initialization is similar to executing the Partial Clean function for this product.

CAUTION: HP recommends backing-up product configuration data before executing a Partial Clean if you need to retain customer-defined settings. See the Backup/Restore item in the Device Maintenance menu.

Reasons for performing Partial Clean

- The product continually boots up in an error state.

  NOTE: Try clearing the error prior to executing a Partial Clean.

- The product will not respond to commands from the control panel.
- Executing the Partial Clean function is helpful for troubleshooting hard disk problems.

- To reset the product by deleting all solutions and customer-defined settings.
- The product default settings are not properly working.

Execute a Partial Clean

1. Turn the product on.
2. The HP logo displays on the product control panel. When an underscore displays below the HP logo, touch the logo to open the Preboot menu.
3. Touch the down arrow button to highlight Administrator, and then touch the OK button.
4. Use the down arrow button to highlight Partial Clean, and then touch the OK button.
5. Touch the OK button again.
6. Touch the Home button to highlight Continue, and then touch the OK button.

NOTE: The product initializes.

Format Disk

The Format Disk option erases the entire disk drive.

CAUTION: After executing a Format Disk option, the product is *not* bootable.

Characteristics of a Format Disk

- Customer-defined settings, third-party solutions, firmware files, and the operating system are deleted.

  NOTE: Rebooting the product *does not* restore the firmware files.

- Rebooting the product restores the firmware files from the Repository location, but does not restore any customer-defined settings.
- After executing the Format Disk function, the message **99.09.67** displays on the control panel.
- After executing the Format Disk function, the product firmware must be reloaded.

CAUTION: HP recommends that you do not use the Format Disk option unless an error occurs and the solution in the product service manual recommends this solution. After executing the Format Disk function, the product is unusable.

HP recommends backing-up product configuration data before executing a Format Disk if you need to retain customer-defined settings. See the Backup/Restore item in the Device Maintenance menu.

Reasons for performing Format Disk

- The product continually boots up in an error state.

  NOTE: Try clearing the error prior to executing a Format Disk.

- The product will not respond to commands from the control panel.

- Executing the Format Disk function is helpful for troubleshooting hard disk problems.
- To reset the product by deleting all solutions and customer-defined settings.

Execute a Format Disk

1. Turn the product on.
2. The HP logo displays on the product control panel. When an underscore displays below the HP logo, touch the logo to open the Preboot menu.
3. Use the down arrow button to highlight Administrator, and then touch the OK button.
4. Use the down arrow button to highlight Format Disk, and then touch the OK button.
5. Touch the OK button again.

NOTE: When the Format Disk operation is complete, you will need to reload the product firmware.

Solve fax problems

- Checklist for solving fax problems
- General fax problems

Checklist for solving fax problems

Use the following checklist to help identify the cause of any fax-related problems you encounter:

- **Are you using the fax cable supplied with the fax accessory?** This fax accessory has been tested with the supplied fax cable to meet RJ11 and functional specifications. Do not substitute another fax cable; the analog-fax accessory requires an analog-fax cable. It also requires an analog phone connection.
- **Is the fax/phone line connector seated in the outlet on the fax accessory?** Make sure that the phone jack is correctly seated in the outlet. Insert the connector into the outlet until it "clicks."

  NOTE: Verify that the phone jack is connected to the fax port rather than to the network port. The ports are similar.

- **Is the phone wall jack working properly?** Verify that a dial tone exists by attaching a phone to the wall jack. Can you hear a dial tone, and can you make or receive a phone call?

What type of phone line are you using?

- **Dedicated line:** A standard analog fax/phone line assigned to receive or send faxes.

  NOTE: The phone line should be for product fax use only and not shared with other types of telephone devices. Examples include alarm systems that use the phone line for notifications to a monitoring company.

- **PBX system:** A business-environment phone system. Standard home phones and the fax accessory use an analog phone signal. Some PBX systems are digital and might not be compatible with the fax accessory. You might need an interfacing Analog Telephone Adapter (ATA) to connect the fax machine to digital PBX systems.
- **Roll-over lines:** A phone system feature where a new call "rolls over" to the next available line when the first incoming line is busy. Try attaching the product to the first incoming phone line. The fax accessory answers the phone after it rings the number of times set in the rings-to-answer setting.

Are you using a surge-protection device?

A surge-protection device can be used between the wall jack and the fax accessory to protect the fax accessory against electrical power passed through the phone lines. These devices can cause some fax communication problems by degrading the quality of the phone signal. If you are having problems sending or receiving faxes and are using one of these devices, connect the product directly to the phone jack on the wall to determine whether the problem is with the surge-protection device.

Are you using a phone company voice-messaging service or an answering machine?

If the rings-to-answer setting for the messaging service is lower than the rings-to-answer setting for the fax accessory, the messaging service answers the call, and the fax accessory cannot receive faxes. If the rings-to-answer setting for the fax accessory is lower than that of the messaging service, the fax accessory answers all calls.

Does your phone line have a call-waiting feature?

If the fax telephone line has an activated call-waiting feature, a call-waiting notice can interrupt a fax call in progress, which causes a communication error. Ensure that a call-waiting feature is not active on the fax telephone line.

Check fax accessory status

If the analog-fax accessory does not appear to be functioning, print a Configuration Page report to check the status.

1. From the Home screen, scroll to and touch the Administration button.
2. Open the following menus:
   - Reports
   - Configuration/Status Pages
   - Configuration Page
3. Touch the Print button to print the report, or touch the View button to view the report on the screen. The report consists of several pages.

NOTE: The product IP address or host name is listed on the Jetdirect Page.

On the Fax Accessory Page of the Configuration Page, under the Hardware Information heading, check the Modem Status. The following table identifies the status conditions and possible solutions.

NOTE: If the Fax Accessory Page does not print, there might be a problem with the analog fax accessory. If you are using LAN fax or Internet fax, those configurations could be disabling the feature.

Operational / Enabled[1]	The analog-fax accessory is installed and ready.
Operational / Disabled[1]	The fax accessory is installed, but you have not configured the required fax settings yet. The fax accessory is installed and operational; however, the HP Digital Sending utility has either disabled the product fax feature or has enabled LAN fax. When LAN fax is enabled, the analog-fax feature is disabled. Only one fax feature, either LAN fax or analog fax, can be enabled at a time. NOTE: If LAN fax is enabled, the Fax feature is unavailable on the product control panel.
Non-Operational / Enabled/Disabled[1]	The product has detected a firmware failure. Upgrade the firmware.
Damaged / Enabled/Disabled[1]	The fax accessory has failed. Reseat the fax accessory card and check for bent pins. If the status is still DAMAGED, replace the analog-fax accessory card.

[1] ENABLED indicates that the analog-fax accessory is enabled and turned on; DISABLED indicates that LAN fax is enabled (analog fax is turned off).

General fax problems

The following are some common fax problems.

The fax failed to send

JBIG is enabled, and the receiving fax machine does not have JBIG capability.

Turn off the JBIG setting.

An Out of Memory status message displays on the product control panel

The product storage disk is full.

Delete some stored jobs from the disk. From the Home screen on the product control panel, touch the Retrieve from Device Memory button. Open the list of stored jobs or stored faxes. Select a job to delete, and then touch the Delete button.

Print quality of a photo is poor or prints as a gray box

You are using the wrong page-content setting or the wrong resolution setting.

Try setting the Optimize Text/Picture option to Photograph setting.

You touched the Stop button to cancel a fax, but the fax was still sent

If the job is too far along in the sending process, you cannot cancel the job.

This is normal operation.

No fax address book button displays

The fax address book feature has not been enabled.

Use the HP MFP Digital Sending Software Configuration utility to enable the fax address book feature.

Not able to locate the Fax settings in HP Web Jetadmin

Fax settings in HP Web Jetadmin are located under the device's status page drop-down menu.

Select **Digital Sending and Fax** from the drop-down menu.

The header is appended to the top of the page when the overlay option is enabled

For all forwarded faxes, the product appends the overlay header to the top of a page.

This is normal operation.

A mix of names and numbers is in the recipients box

Names and numbers can both display, depending on where they are from. The fax address book lists names, and all other databases list numbers.

This is normal operation.

A one-page fax prints as two pages

The fax header is being appended to the top of the fax, pushing text to a second page.

To print a one page fax on one page, set the overlay header to overlay mode, or adjust the fit-to-page setting.

A document stops in the document feeder in the middle of faxing

A jam is in the document feeder.

Clear the jam, and send the fax again.

The volume for sounds coming from the fax accessory is too high or too low

The volume setting needs to be adjusted.

Adjust the volume in the Fax Send Settings menu and the Fax Receive Settings menu.

Product upgrades

To download the most recent firmware upgrade for the product, go to:

- In the US, go to www.hp.com/support/ljM806 and/or www.hp.com/support/ljflowMFPM830 . Click **Drivers & Software**.
- Outside the US, follow these steps:
  1. Go to www.hp.com/support.
  2. Select your country/region.
  3. Click **Drivers & Software**.
  4. Enter the product name (HP LaserJet Enterprise M806 and/or HP LaserJet Enterprise Flow MFP M830), and then select **Search**.

Determine the installed revision of firmware

Print a configuration page to determine the installed revision of firmware.

On the configuration page, look in the section marked Device Information for the firmware datecode and firmware revision.

Firmware datecode and firmware revision examples

- 20100831 (firmware datecode)
- 103067_104746 (firmware revision)

Perform a firmware upgrade

The firmware bundle is a `xxxxxxx.bdl` file. This file requires an interactive upgrade method. You cannot upgrade the product using the traditional FTP, LPR or Port 9100 methods of upgrading. Use one of the following methods to upgrade the firmware for this product.

HP Embedded Web Server

1. Open an browser window.
2. Enter the product IP address in the URL line.
3. Select the **Firmware Upgrade** link from within the **Troubleshooting** tab.

   NOTE: If you get a warning screen, follow the instructions for setting an administrator password from the **Security** tab.

4. Browse to the location that the firmware upgrade file was downloaded to, and then select the firmware file. Select the Install button to perform the upgrade.

   NOTE: Do not close the browser window until the HP Embedded Web Server (EWS) displays the confirmation page.

5. Select **Restart Now** from the EWS confirmation page, or turn the product off, and then on again using the power switch.

USB flash drive (Preboot menu)

1. Copy the `xxxxxxx.bdl` file to a portable USB flash drive.
2. Turn the product on.
3. The HP logo displays on the product control panel. When an underscore displays below the HP logo, touch the logo to open the Preboot menu.
4. Touch the down arrow button to highlight Administrator, and then touch the OK button.
5. Touch the down arrow button to highlight Download, and then touch the OK button.
6. Insert the USB flash drive with the `xxxxxxx.bdl` file on it.

   NOTE: If the error message **No USB Thumbdrive Files Found** displays on the control-panel display, you might need to connect the storage device to the external USB connection on the formatter or try using a different portable storage device.

7. Touch the down arrow button to highlight USB Thumbdrive, and then touch the OK button.
8. Touch the down arrow button to highlight the `xxxxxxx.bdl` file, and then touch the OK button.

   NOTE: The upgrade process can take up to 10 minutes to complete.

   TIP: If there is more than one `xxxxxxx.bdl` file on the storage device, make sure that you select the correct file for this product.

9. When the message **Complete** displays on the control-panel display, touch the back arrow button 3 times.
10. When the message Continue displays on the control-panel display, touch the OK button. The product will initialize.
11. When the upgrade process is complete, print a configuration page and verify that the upgrade firmware version was installed.

USB flash drive (control-panel menu)

1. Copy the `xxxxxxx.bdl` file to a portable USB flash drive.
2. Turn the product on, and then wait until it reaches the **Ready** state.
3. From the Home screen on the product control panel, scroll to and touch the Device Maintenance button.
4. Touch the USB Firmware Upgrade button.
5. Insert the portable USB storage device with the `xxxxxxx.bdl` file on it into the USB port on the front of the product, and then touch the OK button.
6. Touch the `xxxxxxx.bdl` file, and then touch the Upgrade button.

   TIP: If there is more than one `xxxxxxx.bdl` file on the storage device, make sure that you select the correct file for this product.

7. When the product prompts you to confirm the upgrade, touch the Upgrade button.

   When the upgrade is complete, the product will initialize.

   NOTE: The upgrade process can take up to 10 minutes to complete.

8. When the upgrade process is complete, print a configuration page and verify that the upgrade firmware version was installed.

A Service and support

- Hewlett-Packard limited warranty statement
- HP's Premium Protection Warranty: LaserJet toner cartridge limited warranty statement
- HP policy on non-HP supplies
- HP anticounterfeit Web site
- Data stored on the toner cartridge
- End User License Agreement
- OpenSSL
- Customer self-repair warranty service
- Customer support

Hewlett-Packard limited warranty statement

HP PRODUCT	DURATION OF LIMITED WARRANTY
HP LaserJet Enterprise 700 color MFP M775	One-year on-site warranty

HP warrants to you, the end-user customer, that HP hardware and accessories will be free from defects in materials and workmanship after the date of purchase, for the period specified above. If HP receives notice of such defects during the warranty period, HP will, at its option, either repair or replace products which prove to be defective. Replacement products may be either new or equivalent in performance to new.

HP warrants to you that HP software will not fail to execute its programming instructions after the date of purchase, for the period specified above, due to defects in material and workmanship when properly installed and used. If HP receives notice of such defects during the warranty period, HP will replace software which does not execute its programming instructions due to such defects.

HP does not warrant that the operation of HP products will be uninterrupted or error free. If HP is unable, within a reasonable time, to repair or replace any product to a condition as warranted, you will be entitled to a refund of the purchase price upon prompt return of the product.

HP products may contain remanufactured parts equivalent to new in performance or may have been subject to incidental use.

Warranty does not apply to defects resulting from (a) improper or inadequate maintenance or calibration, (b) software, interfacing, parts or supplies not supplied by HP, (c) unauthorized modification or misuse, (d) operation outside of the published environmental specifications for the product, or (e) improper site preparation or maintenance.

TO THE EXTENT ALLOWED BY LOCAL LAW, THE ABOVE WARRANTIES ARE EXCLUSIVE AND NO OTHER WARRANTY OR CONDITION, WHETHER WRITTEN OR ORAL, IS EXPRESSED OR IMPLIED AND HP SPECIFICALLY DISCLAIMS ANY IMPLIED WARRANTIES OR CONDITIONS OF MERCHANTABILITY, SATISFACTORY QUALITY, AND FITNESS FOR A PARTICULAR PURPOSE. Some countries/regions, states or provinces do not allow limitations on the duration of an implied warranty, so the above limitation or exclusion might not apply to you. This warranty gives you specific legal rights and you might also have other rights that vary from country/region to country/region, state to state, or province to province.

HP's limited warranty is valid in any country/region or locality where HP has a support presence for this product and where HP has marketed this product. The level of warranty service you receive may vary according to local standards. HP will not alter form, fit or function of the product to make it operate in a country/region for which it was never intended to function for legal or regulatory reasons.

TO THE EXTENT ALLOWED BY LOCAL LAW, THE REMEDIES IN THIS WARRANTY STATEMENT ARE YOUR SOLE AND EXCLUSIVE REMEDIES. EXCEPT AS INDICATED ABOVE, IN NO EVENT WILL HP OR ITS SUPPLIERS BE LIABLE FOR LOSS OF DATA OR FOR DIRECT, SPECIAL, INCIDENTAL, CONSEQUENTIAL (INCLUDING LOST PROFIT OR DATA), OR OTHER DAMAGE, WHETHER BASED IN CONTRACT, TORT, OR OTHERWISE. Some countries/regions, states or provinces do not allow the exclusion or limitation of incidental or consequential damages, so the above limitation or exclusion may not apply to you.

THE WARRANTY TERMS CONTAINED IN THIS STATEMENT, EXCEPT TO THE EXTENT LAWFULLY PERMITTED, DO NOT EXCLUDE, RESTRICT OR MODIFY AND ARE IN ADDITION TO THE MANDATORY STATUTORY RIGHTS APPLICABLE TO THE SALE OF THIS PRODUCT TO YOU.

HP's Premium Protection Warranty: LaserJet toner cartridge limited warranty statement

This HP product is warranted to be free from defects in materials and workmanship.

This warranty does not apply to products that (a) have been refilled, refurbished, remanufactured or tampered with in any way, (b) experience problems resulting from misuse, improper storage, or operation outside of the published environmental specifications for the printer product or (c) exhibit wear from ordinary use.

To obtain warranty service, please return the product to place of purchase (with a written description of the problem and print samples) or contact HP customer support. At HP's option, HP will either replace products that prove to be defective or refund your purchase price.

TO THE EXTENT ALLOWED BY LOCAL LAW, THE ABOVE WARRANTY IS EXCLUSIVE AND NO OTHER WARRANTY OR CONDITION, WHETHER WRITTEN OR ORAL, IS EXPRESSED OR IMPLIED AND HP SPECIFICALLY DISCLAIMS ANY IMPLIED WARRANTIES OR CONDITIONS OF MERCHANTABILITY, SATISFACTORY QUALITY, AND FITNESS FOR A PARTICULAR PURPOSE.

TO THE EXTENT ALLOWED BY LOCAL LAW, IN NO EVENT WILL HP OR ITS SUPPLIERS BE LIABLE FOR DIRECT, SPECIAL, INCIDENTAL, CONSEQUENTIAL (INCLUDING LOST PROFIT OR DATA), OR OTHER DAMAGE, WHETHER BASED IN CONTRACT, TORT, OR OTHERWISE.

THE WARRANTY TERMS CONTAINED IN THIS STATEMENT, EXCEPT TO THE EXTENT LAWFULLY PERMITTED, DO NOT EXCLUDE, RESTRICT OR MODIFY AND ARE IN ADDITION TO THE MANDATORY STATUTORY RIGHTS APPLICABLE TO THE SALE OF THIS PRODUCT TO YOU.

HP policy on non-HP supplies

Hewlett-Packard Company cannot recommend the use of non-HP toner cartridges, either new or remanufactured.

NOTE: For HP printer products, the use of a non-HP toner cartridge or a refilled toner cartridge does not affect either the warranty to the customer or any HP support contract with the customer. However, if product failure or damage is attributable to the use of a non-HP toner cartridge or refilled toner cartridge, HP will charge its standard time and materials charges to service the product for the particular failure or damage.

HP anticounterfeit Web site

Go to www.hp.com/go/anticounterfeit when you install an HP toner cartridge and the control-panel message indicates the cartridge is non-HP. HP will help determine if the cartridge is genuine and take steps to resolve the problem.

Your toner cartridge might not be a genuine HP toner cartridge if you notice the following:

- The supplies status page indicates that a non-HP supply is installed.
- You are experiencing a high number of problems with the cartridge.
- The cartridge does not look like it usually does (for example, the packaging differs from HP packaging).

Data stored on the toner cartridge

The HP toner cartridges used with this product contain a memory chip that assists in the operation of the product.

In addition, this memory chip collects a limited set of information about the usage of the product, which might include the following: the date when the toner cartridge was first installed, the date when the toner cartridge was last used, the number of pages printed using the toner cartridge, the page coverage, the printing modes used, any printing errors that might have occurred, and the product model. This information helps HP design future products to meet our customers' printing needs.

The data collected from the toner cartridge memory chip does not contain information that can be used to identify a customer or user of the toner cartridge or their product.

HP collects a sampling of the memory chips from toner cartridges returned to HP's free return and recycling program (HP Planet Partners: www.hp.com/recycle). The memory chips from this sampling are read and studied in order to improve future HP products. HP partners who assist in recycling this toner cartridge might have access to this data, as well.

Any third party possessing the toner cartridge might have access to the anonymous information on the memory chip.

End User License Agreement

PLEASE READ CAREFULLY BEFORE USING THIS SOFTWARE PRODUCT: This End-User License Agreement ("EULA") is a contract between (a) you (either an individual or the entity you represent) and (b) Hewlett-Packard Company ("HP") that governs your use of the software product ("Software"). This EULA does not apply if there is a separate license agreement between you and HP or its suppliers for the Software, including a license agreement in online documentation. The term "Software" may include (i) associated media, (ii) a user guide and other printed materials, and (iii) "online" or electronic documentation (collectively "User Documentation").

RIGHTS IN THE SOFTWARE ARE OFFERED ONLY ON THE CONDITION THAT YOU AGREE TO ALL TERMS AND CONDITIONS OF THIS EULA. BY INSTALLING, COPYING, DOWNLOADING, OR OTHERWISE USING THE SOFTWARE, YOU AGREE TO BE BOUND BY THIS EULA. IF YOU DO NOT ACCEPT THIS EULA, DO NOT INSTALL, DOWNLOAD, OR OTHERWISE USE THE SOFTWARE. IF YOU PURCHASED THE SOFTWARE BUT DO NOT AGREE TO THIS EULA, PLEASE RETURN THE SOFTWARE TO YOUR PLACE OF PURCHASE WITHIN FOURTEEN DAYS FOR A REFUND OF THE PURCHASE PRICE; IF THE SOFTWARE IS INSTALLED ON OR MADE AVAILABLE WITH ANOTHER HP PRODUCT, YOU MAY RETURN THE ENTIRE UNUSED PRODUCT.

1. THIRD PARTY SOFTWARE. The Software may include, in addition to HP proprietary software ("HP Software"), software under licenses from third parties ("Third Party Software" and "Third Party License"). Any Third Party Software is licensed to you subject to the terms and conditions of the corresponding Third Party License. Generally, the Third Party License is in a file such as "license.txt" or a "readme" file. You should contact HP support if you cannot find a Third Party License. If the Third Party Licenses include licenses that provide for the availability of source code (such as the GNU General Public License) and the corresponding source code is not included with the Software, then check the product support pages of HP's website (hp.com) to learn how to obtain such source code.

2. LICENSE RIGHTS. You will have the following rights provided you comply with all terms and conditions of this EULA:

   a. Use. HP grants you a license to Use one copy of the HP Software. "Use" means installing, copying, storing, loading, executing, displaying, or otherwise using the HP Software. You may not modify the HP Software or disable any licensing or control feature of the HP Software. If this Software is provided by HP for Use with an imaging or printing product (for example, if the Software is a printer driver, firmware, or add-on), the HP Software may only be used with such product ("HP Product"). Additional restrictions on Use may appear in the User Documentation. You may not separate component parts of the HP Software for Use. You do not have the right to distribute the HP Software.

   b. Copying. Your right to copy means you may make archival or back-up copies of the HP Software, provided each copy contains all the original HP Software's proprietary notices and is used only for back-up purposes.

3. UPGRADES. To Use HP Software provided by HP as an upgrade, update, or supplement (collectively "Upgrade"), you must first be licensed for the original HP Software identified by HP as eligible for the Upgrade. To the extent the Upgrade supersedes the original HP Software, you may no longer use such HP Software. This EULA applies to each Upgrade unless HP provides other terms with the Upgrade. In case of a conflict between this EULA and such other terms, the other terms will prevail.

4. TRANSFER.

   a. Third Party Transfer. The initial end user of the HP Software may make a one-time transfer of the HP Software to another end user. Any transfer will include all component parts, media, User Documentation, this EULA, and if applicable, the Certificate of Authenticity. The transfer may not be an indirect transfer, such as a consignment. Prior to the transfer, the end user receiving the transferred Software will agree to this EULA. Upon transfer of the HP Software, your license is automatically terminated.

   b. Restrictions. You may not rent, lease or lend the HP Software or Use the HP Software for commercial timesharing or bureau use. You may not sublicense, assign or otherwise transfer the HP Software except as expressly provided in this EULA.

5. PROPRIETARY RIGHTS. All intellectual property rights in the Software and User Documentation are owned by HP or its suppliers and are protected by law, including applicable copyright, trade secret, patent, and trademark laws. You will not remove any product identification, copyright notice, or proprietary restriction from the Software.

6. LIMITATION ON REVERSE ENGINEERING. You may not reverse engineer, decompile, or disassemble the HP Software, except and only to the extent that the right to do so is allowed under applicable law.

7. CONSENT TO USE OF DATA. HP and its affiliates may collect and use technical information you provide in relation to (i) your Use of the Software or the HP Product, or (ii) the provision of support services related to the Software or the HP Product. All such information will be subject to HP's privacy policy. HP will not use such information in a form that personally identifies you except to the extent necessary to enhance your Use or provide support services.

8. LIMITATION OF LIABILITY. Notwithstanding any damages that you might incur, the entire liability of HP and its suppliers under this EULA and your exclusive remedy under this EULA will be limited to the greater of the amount actually paid by you for the Product or U.S. $5.00. TO THE MAXIMUM EXTENT PERMITTED BY APPLICABLE LAW, IN NO EVENT WILL HP OR ITS SUPPLIERS BE LIABLE FOR ANY SPECIAL, INCIDENTAL, INDIRECT, OR CONSEQUENTIAL DAMAGES (INCLUDING DAMAGES FOR LOST PROFITS, LOST DATA, BUSINESS INTERRUPTION, PERSONAL INJURY, OR LOSS OF PRIVACY) RELATED IN ANY WAY TO THE USE OF OR INABILITY TO USE THE SOFTWARE, EVEN IF HP OR ANY SUPPLIER HAS BEEN ADVISED OF THE POSSIBILITY OF SUCH DAMAGES AND EVEN IF THE ABOVE REMEDY FAILS OF ITS ESSENTIAL PURPOSE. Some states or other jurisdictions do not allow the exclusion or limitation of incidental or consequential damages, so the above limitation or exclusion may not apply to you.

9. U.S. GOVERNMENT CUSTOMERS. Software was developed entirely at private expense. All Software is commercial computer software within the meaning of the applicable acquisition regulations. Accordingly, pursuant to US FAR 48 CFR 12.212 and DFAR 48 CFR 227.7202, use, duplication and disclosure of the Software by or for the U.S. Government or a U.S. Government subcontractor is subject solely to the terms and conditions set forth in this End User License Agreement, except for provisions which are contrary to applicable mandatory federal laws.

10. COMPLIANCE WITH EXPORT LAWS. You will comply with all laws, rules, and regulations (i) applicable to the export or import of the Software, or (ii) restricting the Use of the Software, including any restrictions on nuclear, chemical, or biological weapons proliferation.

11. RESERVATION OF RIGHTS. HP and its suppliers reserve all rights not expressly granted to you in this EULA.

© 2009 Hewlett-Packard Development Company, L.P.

Rev. 04/09

OpenSSL

This product includes software developed by the OpenSSL Project for use in the OpenSSL Toolkit (http://www.openssl.org/)

THIS SOFTWARE IS PROVIDED BY THE OpenSSL PROJECT ``AS IS'' AND ANY EXPRESSED OR IMPLIED WARRANTIES, INCLUDING, BUT NOT LIMITED TO, THE IMPLIED WARRANTIES OF MERCHANTABILITY AND FITNESS FOR A PARTICULAR PURPOSE ARE DISCLAIMED. IN NO EVENT SHALL THE OpenSSL PROJECT OR ITS CONTRIBUTORS BE LIABLE FOR ANY DIRECT, INDIRECT, INCIDENTAL, SPECIAL, EXEMPLARY, OR CONSEQUENTIAL DAMAGES (INCLUDING, BUT NOT LIMITED TO, PROCUREMENT OF SUBSTITUTE GOODS OR SERVICES;

LOSS OF USE, DATA, OR PROFITS; OR BUSINESS INTERRUPTION) HOWEVER CAUSED AND ON ANY THEORY OF LIABILITY, WHETHER IN CONTRACT, STRICT LIABILITY, OR TORT (INCLUDING NEGLIGENCE OR OTHERWISE) ARISING IN ANY WAY OUT OF THE USE OF THIS SOFTWARE, EVEN IF ADVISED OF THE POSSIBILITY OF SUCH DAMAGE.

This product includes cryptographic software written by Eric Young (eay@cryptsoft.com). This product includes software written by Tim Hudson (tjh@cryptsoft.com).

Customer self-repair warranty service

HP products are designed with many Customer Self Repair (CSR) parts to minimize repair time and allow for greater flexibility in performing defective parts replacement. If during the diagnosis period, HP identifies that the repair can be accomplished by the use of a CSR part, HP will ship that part directly to you for replacement. There are two categories of CSR parts: 1) Parts for which customer self repair is mandatory. If you request HP to replace these parts, you will be charged for the travel and labor costs of this service. 2) Parts for which customer self repair is optional. These parts are also designed for Customer Self Repair. If, however, you require that HP replace them for you, this may be done at no additional charge under the type of warranty service designated for your product.

Based on availability and where geography permits, CSR parts will be shipped for next business day delivery. Same-day or four-hour delivery may be offered at an additional charge where geography permits. If assistance is required, you can call the HP Technical Support Center and a technician will help you over the phone. HP specifies in the materials shipped with a replacement CSR part whether a defective part must be returned to HP. In cases where it is required to return the defective part to HP, you must ship the defective part back to HP within a defined period of time, normally five (5) business days. The defective part must be returned with the associated documentation in the provided shipping material. Failure to return the defective part may result in HP billing you for the replacement. With a customer self repair, HP will pay all shipping and part return costs and determine the courier/carrier to be used.

Customer support

Get telephone support for your country/region Have the product name, serial number, date of purchase, and problem description ready.	Country/region phone numbers are on the flyer that was in the box with your product or at www.hp.com/support/.
Get 24-hour Internet support	• In the US, go to www.hp.com/support/ljM806 and/or www.hp.com/support/ljflowMFPM830. • Outside the US, go to www.hp.com/support. Select your country/region. Click **Product Support & Troubleshooting**. Enter the product name, and then select **Search**.
Download software utilities, drivers, and electronic information	• In the US, go to www.hp.com/support/ljM806 and/or www.hp.com/support/ljflowMFPM830. Click **Drivers & Software**. • Outside the US, go to www.hp.com/support. Select your country/region. Click **Drivers & Software**. Enter the product name (for example, “LaserJet M575”), and then select **Search**.
Order additional HP service or maintenance agreements	www.hp.com/go/carepack
Register your product	www.register.hp.com

B Product specifications

- Physical specifications
- Power consumption, electrical specifications, and acoustic emissions
- Environmental specifications

Physical specifications

HP LaserJet Enterprise M806

Table B-1 Physical specifications, with toner cartridge

Product	Height	Depth	Width	Weight
M806dn	601 mm (23.7 in)	648 mm (25.5 in)	1103 mm (43.4 in)	76.1 kg (168 lb)
M806x+	1000 mm (39.4 in)	715 mm (28.1 in)	1103 mm (43.4 in)	108.4 kg (239 lb)

Table B-2 Product dimensions with all doors and trays fully opened

Product	Height	Depth	Width
M806dn	664 mm (26.1 in)	1128 mm (44.4 in)	1363 mm (53.7 in)
M806x+	1036 mm (40.8 in)	1195 mm (47 in)	1363 mm (53.7 in)

HP LaserJet Enterprise Flow M830

Table B-3 Physical specifications, with toner cartridge

Product	Height	Depth	Width	Weight
M830z	1203 mm (47.4 in)	761 mm (30 in)	1103 mm (43.4 in)	136 kg (300 lb)

Table B-4 Product dimensions with all doors, trays, and document feeder fully opened

Product	Height	Depth	Width
M830z	1593 mm (62.7 in)	1196 mm (47.1 in)	1363 mm (53.7 in)

Finishing accessories

Table B-5 Accessory specifications

Product	Height	Depth	Width	Weight
Stapler/stacker	1093 mm (43 in)	783 mm (30.8 in)	674 mm (26.5 in)	68 kg (150 lb)
Stapler/stacker with hole punch	1093 mm (43 in)	783 mm (30.8 in)	674 mm (26.5 in)	73 kg (161 lb)
Booklet maker	1093 mm (43 in)	783 mm (30.8 in)	674 mm (26.5 in)	87 kg (192 lb)

Table B-6 Accessory dimensions with all doors and trays fully opened

Product	Height	Depth	Width
Stapler/stacker	1093 mm (43 in)	783 mm (30.8 in)	1094 mm (43.1 in)
Stapler/stacker with hole punch	1093 mm (43 in)	783 mm (30.8 in)	1094 mm (43.1 in)
Booklet maker	1093 mm (43 in)	783 mm (30.8 in)	1094 mm (43.1 in)

Power consumption, electrical specifications, and acoustic emissions

SSee www.hp.com/support/ljM806 and www.hp.com/support/ljflowMFPM830 for current information.

CAUTION: Power requirements are based on the country/region where the product is sold. Do not convert operating voltages. This will damage the product and void the product warranty.

Environmental specifications

Table B-7 Operating-environment specifications

Environment	Recommended	Allowed
Temperature	17° to 25°C (62.6° to 77°F)	15° to 30°C (59° to 86°F)
Relative humidity	30% to 70% relative humidity (RH)	10% to 80% RH
Altitude	Not applicable	0 to 3048 m (0 to 10,000 ft)

C Regulatory information

- FCC regulations
- Environmental product stewardship program
- Declaration of conformity (M806)
- Declaration of conformity (M830)
- Certificate of Volatility (M806)
- Certificate of Volatility (M830)
- Safety statements
- Additional statements for telecom (fax) products

FCC regulations

This equipment has been tested and found to comply with the limits for a Class A digital device, pursuant to Part 15 of the FCC rules. These limits are designed to provide reasonable protection against harmful interference when the equipment is operated in a commercial environment. This equipment generates, uses, and can radiate radio frequency energy, and if not installed and used in accordance with the instruction manual, may cause harmful interference to radio communications. Operation of this equipment in a residential area is likely to cause harmful interference in which case the user will be required to correct the interference at his own expense.

NOTE: Any changes or modifications to the printer that are not expressly approved by HP could void the user's authority to operate this equipment.

Use of a shielded interface cable is required to comply with the Class A limits of Part 15 of FCC rules.

Environmental product stewardship program

Protecting the environment

Hewlett-Packard Company is committed to providing quality products in an environmentally sound manner. This product has been designed with several attributes to minimize impacts on our environment.

Ozone production

The airborne emissions of ozone for this product has been measured according to a generally recognized method* and when these emissions data are applied to a “generic office model exposure scenario”**, HP is able to determine there is no appreciable amount of ozone generated during printing that exceeds any current indoor air quality standards or guidelines.

* Test method for the determination of emissions from hardcopy devices with respect to awarding the environmental label for office devices with printing function; RAL-UZ 171 – BAM July, 2012

** Based on ozone concentration when printing 2 hours per day in a 32 cubic meter room with a ventilation rate of 0.72 air changes per hour with HP printing supplies

Power consumption

Power usage drops significantly while in Ready or Sleep mode, which saves natural resources and saves money without affecting the high performance of this product. Hewlett-Packard printing and imaging equipment marked with the ENERGY STAR® logo is qualified to the U.S. Environmental Protection Agency's ENERGY STAR specifications for imaging equipment. The following mark will appear on ENERGY STAR qualified imaging products:

Additional ENERGY STAR qualified imaging product model information is listed at:

www.hp.com/go/energystar

Paper use

This product’s manual/automatic duplex feature (two-sided printing) and N-up printing (multiple pages printed on one page) capability can reduce paper usage and the resulting demands on natural resources.

Plastics

Plastic parts over 25 grams are marked according to international standards that enhance the ability to identify plastics for recycling purposes at the end of the product’s life.

HP LaserJet print supplies

It’s easy to return and recycle your HP LaserJet toner cartridges after use—free of charge—with HP Planet Partners. Multilingual program information and instructions are included in every new

HP LaserJet toner cartridge and supplies package. You help reduce the toll on the environment further when you return multiple cartridges together rather than separately.

HP is committed to providing inventive, high-quality products and services that are environmentally sound, from product design and manufacturing to distribution, customer use and recycling. When you participate in the HP Planet Partners program, we ensure your HP LaserJet toner cartridges are recycled properly, processing them to recover plastics and metals for new products and diverting millions of tons of waste from landfills. Since this cartridge is being recycled and used in new materials, it will not be returned to you. Thank you for being environmentally responsible!

NOTE: Use the return label to return original HP LaserJet toner cartridges only. Please do not use this label for HP inkjet cartridges, non-HP cartridges, refilled or remanufactured cartridges or warranty returns. For information about recycling your HP inkjet cartridges please go to http://www.hp.com/recycle.

Return and recycling instructions

United States and Puerto Rico

The enclosed label in the HP LaserJet toner cartridge box is for the return and recycling of one or more HP LaserJet toner cartridges after use. Please follow the applicable instructions below.

Multiple returns (more than one cartridge)

1. Package each HP LaserJet toner cartridge in its original box and bag.
2. Tape the boxes together using strapping or packaging tape. The package can weigh up to 31 kg (70 lb).
3. Use a single pre-paid shipping label.

OR

1. Use your own suitable box, or request a free bulk collection box from www.hp.com/recycle or 1-800-340-2445 (holds up to 31 kg (70 lb) of HP LaserJet toner cartridges).
2. Use a single pre-paid shipping label.

Single returns

1. Package the HP LaserJet toner cartridge in its original bag and box.
2. Place the shipping label on the front of the box.

Shipping

For US and Puerto Rico HP LaserJet toner cartridge recycling returns, use the pre-paid, pre-addressed shipping label contained in the box. To use the UPS label, give the package to the UPS driver during your next delivery or pick-up, or take it to an authorized UPS drop-off center. (Requested UPS Ground pickup will be charged normal pick-up rates) For the location of your local UPS drop-off center, call 1-800-PICKUPS or visit www.ups.com.

If you are returning the package with the FedEx label, give the package to either the U.S. Postal Service carrier or FedEx driver during your next pick-up or delivery. (Requested FedEx Ground pickup will be charged normal pick-up rates). Or, you can drop off your packaged toner cartridge(s) at any U.S. Post Office or any FedEx shipping center or store. For the location of your nearest U.S. Post

Office, please call 1-800-ASK-USPS or visit www.usps.com. For the location of your nearest FedEx shipping center/store, please call 1-800-GOFEDEX or visit www.fedex.com.

For more information, or to order additional labels or boxes for bulk returns, visit www.hp.com/recycle or call 1-800-340-2445. Information subject to change without notice.

Residents of Alaska and Hawaii

Do not use the UPS label. Call 1-800-340-2445 for information and instructions. The U.S. Postal Service provides no-cost cartridge return transportation services under an arrangement with HP for Alaska and Hawaii.

Non-U.S. returns

To participate in HP Planet Partners return and recycling program, just follow the simple directions in the recycling guide (found inside the packaging of your new product supply item) or visit www.hp.com/recycle. Select your country/region for information on how to return your HP LaserJet printing supplies.

Paper

This product is capable of using recycled papers when the paper meets the guidelines outlined in the *HP LaserJet Printer Family Print Media Guide*. This product is suitable for the use of recycled paper according to EN12281:2002.

Material restrictions

This HP product does not contain added mercury.

This HP product contains a battery that might require special handling at end-of-life. The batteries contained in or supplied by Hewlett-Packard for this product include the following:

HP LaserJet Enterprise M806 and/or HP LaserJet Enterprise Flow MFP M830	
Type	Carbon monofluoride lithium
Weight	0.8 g
Location	On formatter board
User-removable	No

廢電池請回收

For recycling information, you can go to www.hp.com/recycle, or contact your local authorities or the Electronics Industries Alliance: www.eiae.org.

Disposal of waste equipment by users

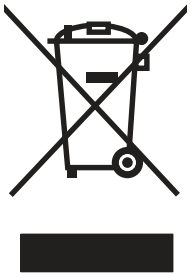

This symbol means do not dispose of your product with your other household waste. Instead, you should protect human health and the environment by handing over your waste equipment to a designated collection point for the recycling of waste electrical and electronic equipment. For more information, please contact your household waste disposal service, or go to: www.hp.com/recycle.

Electronic hardware recycling

HP encourages customers to recycle used electronic hardware. For more information about recycling programs go to: www.hp.com/recycle.

Chemical substances

HP is committed to providing our customers with information about the chemical substances in our products as needed to comply with legal requirements such as REACH (Regulation EC No 1907/2006 of the European Parliament and the Council). A chemical information report for this product can be found at: www.hp.com/go/reach.

Material Safety Data Sheet (MSDS)

Material Safety Data Sheets (MSDS) for supplies containing chemical substances (for example, toner) can be obtained by accessing the HP Web site at www.hp.com/go/msds.

EPEAT

Many HP products are designed to meet EPEAT. EPEAT is a comprehensive environmental rating that helps identify greener electronics equipment. For more information on EPEAT go to www.epeat.net. For information on HP's EPEAT registered products go to www.hp.com/hpinfo/globalcitizenship/environment/pdf/epeat_printers.pdf.

For more information

To obtain information about these environmental topics:

- Product environmental profile sheet for this and many related HP products
- HP’s commitment to the environment
- HP’s environmental management system
- HP’s end-of-life product return and recycling program
- Material Safety Data Sheets

Visit www.hp.com/go/environment.

Declaration of conformity (M806)

Declaration of Conformity

according to ISO/IEC 17050-1 and EN 17050-1

Manufacturer's Name:	Hewlett-Packard Company	DoC#: BOISB-1305-01-rel.1.0
Manufacturer's Address:	11311 Chinden Boulevard	
	Boise, Idaho 83714-1021, USA	

declares, that the product

Product Name:	HP LaserJet Enterprise M806, HP LaserJet Enterprise M806dn, HP LaserJet Enterprise M806x+
Regulatory Model:[2)]	BOISB-1305-01
Product Options:	All
Toner Cartridges:	CF325X

conforms to the following Product Specifications:

SAFETY:	IEC 60950-1:2005 +A1:2009/ EN60950-1: 2006 +A11:2009 +A1:2010 +A12:2011
	IEC 60825-1:2007 / EN 60825-1:2007 (Class 1 Laser/LED Product)
	IEC 62479:2010 / EN 62479:2010
	GB4943.1-2011
EMC:	CISPR22:2008 / EN55022:2010 - Class A[1),3)]
	EN 61000-3-2:2006+A1:2009+A2:2009
	EN 61000-3-3:2008
	EN 55024:1998 +A1 +A2
	FCC Title 47 CFR, Part 15 Class A / ICES-003, Issue 4
	GB9254-2008, GB17625.1-2003
RoHS:	EN 50581:2012

Supplementary Information:

The product herewith complies with the requirements of the EMC Directive 2004/108/EC, the Low Voltage Directive 2006/95/EC, the RoHS Directive 2011/65/EC, and carries the CE-Marking accordingly.

This Device complies with Part 15 of the FCC Rules. Operation is subject to the following two Conditions: (1) this device may not cause harmful interference, and (2) this device must accept any interference received, including interference that may cause undesired operation.

1. The product was tested in a typical configuration with Hewlett-Packard Personal Computer Systems.
2. For regulatory purposes, this product is assigned a Regulatory model number. This number should not be confused with the product name or the product number(s).
3. The product meets the requirements of EN55022 & CNS13438 Class A in which case the following applies: “Warning — This is a class A product. In a domestic environment this product may cause radio interference in which case the user may be required to take adequate measures.”

Boise, Idaho USA

October 2013

For Regulatory Topics only, contact:

European Contact:	Your Local Hewlett-Packard Sales and Service Office or Hewlett-Packard GmbH, HQ-TRE, Herrenberger Straße 140, 71034 Böblingen, Germany www.hp.eu/certificates
USA Contact:	Product Regulations Manager, Hewlett-Packard Company, 11311 Chinden Boulevard, Mail Stop 160, Boise, Idaho 83714-0021

Declaration of conformity (M830)

Declaration of Conformity

according to ISO/IEC 17050-1 and EN 17050-1

Manufacturer's Name:	Hewlett-Packard Company	DoC#: BOISB-1305-00-rel.1.0
Manufacturer's Address:	11311 Chinden Boulevard	
	Boise, Idaho 83714-1021, USA	

declares, that the product

Product Name:	HP LaserJet Enterprise flow MFP M830z
Regulatory Model:[2)]	BOISB-1305-00
	Including:
	CZ994A – Stapler/Stacker
	CZ995A – Stapler/Stacker with 2/3 hole punch
	CZ996A – Stapler/Stacker with 2/4 hole punch
	CZ285A – Booklet Maker/Finisher
	BOISB-0703-00 – Fax Module
Product Options:	All
Toner Cartridges:	CF325X

conforms to the following Product Specifications:

SAFETY:	IEC 60950-1:2005 +A1:2009 / EN60950-1: 2006 +A11:2009 +A1:2010 +A12:2011
	IEC 60825-1:2007 / EN 60825-1:2007 (Class 1 Laser/LED Product)
	IEC 62479:2010 / EN 62479:2010
	GB4943.1-2011
EMC:	CISPR22:2008 / EN55022:2010 - Class A[1),3)]
	EN 61000-3-2:2006+A1:2009+A2:2009
	EN 61000-3-3:2008
	EN 55024:2010
	FCC Title 47 CFR, Part 15 Class A / ICES-003, Issue 4
	GB9254-2008, GB17625.1-2003
TELECOM:[5)]	ES 203 021; FCC Title 47 CFR, Part 68[4)]
RoHS:	EN 50581:2012

Supplementary Information:

The product herewith complies with the requirements of the R&TTE Directive 1999/5/EC, EMC Directive 2004/108/EC, the Low Voltage Directive 2006/95/EC, the RoHS Directive 2011/65/EU, and carries the CE-Marking CE accordingly.

This Device complies with Part 15 of the FCC Rules. Operation is subject to the following two Conditions: (1) this device may not cause harmful interference, and (2) this device must accept any interference received, including interference that may cause undesired operation.

1. The product was tested in a typical configuration with Hewlett-Packard Personal Computer Systems.
2. For regulatory purposes, this product is assigned a Regulatory model number. This number should not be confused with the product name or the product number(s).
3. The product meets the requirements of EN55022 & CNS13438 Class A in which case the following applies: “Warning — This is a class A product. In a domestic environment this product may cause radio interference in which case the user may be required to take adequate measures.”
4. Telecom approvals and standards appropriate for the target countries/regions have been applied to this product, in addition to those listed above.
5. This product uses an analog fax accessory module which Regulatory Model number is: BOISB-0703-00 as needed to meet technical regulatory requirements for the countries/regions this product will be sold.

Boise, Idaho USA

February 2013

For Regulatory Topics only, contact:

European Contact:	Your Local Hewlett-Packard Sales and Service Office or Hewlett-Packard GmbH, HQ-TRE, Herrenberger Straße 140, D-71034 Böblingen, Germany www.hp.eu/certificates
USA Contact:	Product Regulations Manager, Hewlett-Packard Company, PO Box 15, Mail Stop 160, Boise, Idaho 83707-0015 (Phone: 208-396-6000)

Certificate of Volatility (M806)

Figure C-1 Certificate of Volatility (1 of 2)

Hewlett-Packard Certificate of Volatility		
Model: HP LaserJet Enterprise M806	Part Number: M806dn=CZ244A, M806z+=CZ245A	Address: Hewlett Packard Company 11311 Chinden Blvd Boise, ID 83714

Volatile Memory				
Does the device contain volatile memory (Memory whose contents are lost when power is removed)? ☒ Yes ☐ No If Yes please describe the type, size, function, and steps to clear the memory below				
Type (SRAM, DRAM, etc): DDR2 - DRAM	Size: 1 GB	User Modifiable: ☐ Yes ☒ No	Function: Used for temporary storage during the process of jobs, and for applications that is running on the OS. (Note: Total memory consists of 512MB on board and an additional 512MB DIMM)	Steps to clear memory: When the printer is powered off, the memory is erased.
Type (SRAM, DRAM, etc):	Size:	User Modifiable: ☐ Yes ☐ No	Function:	Steps to clear memory:
Type (SRAM, DRAM, etc):	Size:	User Modifiable: ☐ Yes ☐ No	Function:	Steps to clear memory:

Non-Volatile Memory				
Does the device contain non-volatile memory (Memory whose contents are retained when power is removed)? ☒ Yes ☐ No If Yes please describe the type, size, function, and steps to clear the memory below				
Type (Flash, EEPROM, etc): SPI Flash	Size: 4 MB	User Modifiable: ☒ Yes ☐ No	Function: Contains the boot code and factory product configuration data required for the device to function. User modifications are limited to downloading digitally signed HP firmware images.	Steps to clear memory: There are no steps to clear this data.
Type (Flash, EEPROM, etc): ICB EEPROM	Size: 32KB	User Modifiable: ☒ Yes ☐ No	Function: Backup device for critical system counters and product configuration information.	Steps to clear memory: There are no steps to clear this data.
Type (Flash, EEPROM, etc): None	Size:	User Modifiable: ☐ Yes ☐ No	Function:	Steps to clear memory:

Mass Storage				
Does the device contain mass storage memory (Hard Disk Drive, Tape Backup)? ☒ Yes ☐ No If Yes please describe the type, size, function, and steps to clear the memory below				
Type (HDD, Tape, etc): Self encrypting Hard drive, SATA2	Size: 320 GB	User Modifiable: ☒ Yes ☐ No	Function: Stores customer data, OS, applications, digitally signed firmware images, persistent data, and temporary data used for processing and system functions. (HDD used on the M806dx bundle only.	Steps to clear memory: There are several ways to erase this: 1. Secure Storage Erase - Erases temporary files and job data by overwriting information one or three times 3. Secure Disk Erase - Industry standard ATA Secure Erase. Overwrites all data on the hard drive. 4. Secure File Erase - Erases files when jobs finish processing by overwriting them one or three times.
Type (HDD, Tape, etc): Solid State Drive	Size: 8GB	User Modifiable: ☒ Yes ☐ No	Function: Stores customer data, OS, applications, digitally signed firmware images, persistent data, and temporary data used for processing and system functions. Note: (SSD Used on the M806dn bundle only.)	Steps to clear memory: Perform a Part Clean from the BIOS memory.

Figure C-2 Certificate of Volatility (2 of 2)

USB
Does the item accept USB input and if so, for what purpose (i.e Print Jobs, device firmware updates, scan upload)? ☒ Yes ☐ No If Yes please describe below
Print jobs, HP digitally signed firmware upgrades, 3rd party application loading. Restore encrypted backed-up system settings. USB ports can be disabled.
Can any data other than scan upload be sent to the USB device)? ☒ Yes ☐ No If Yes please describe below
Diagnostic service logs can be uploaded. Print files can be printed via a USB thumb drive.

RF/RFID	
Does the item use RF or RFID for receive or transmit of any data including remote diagnostics. (e.g. Cellular phone, Bluetooth) ☒ Yes ☐ No If Yes please describe below	
Purpose: Product contains an integrated WiFi/NFC accessory module consisting of an HP Umber WiFi 802.11n and Near Filed Communication (NFC) radio. The WiFi portion acts in Access Point mode ONLY and provides AP client connection capability. NFC is used to pass NDEF tag data (WiFi SSID, WPA configuration data). The latter is used to enable wireless direct print for mobile devices.	
Frequency: 2.4Ghz to 2.5Ghz ISM band (WiFi); 13.56mhz ISO/IEC 18000-3 (NFC)	Bandwidth: 1Mhz Bandwidth (WiFi); 14Khz bandwidth (+-7Khz off center 13.56Mhz) (NFC)
Modulation: DSSS / OFDM modulation (WiFi)	Effective Radiate Power (ERP): Power output max is 20dBm for WiFi; (Note: Power out max for WiFi can be different in some regions and controlled by FW). Power output is 23dBm, into an 50 ohm transformer, for NFC; (Note: There will be some "loss" in the antenna and therefore this is not all radiated in to the air.)
Specifications: WiFi has 13 Channel support (@ a spacing of 20MHz) for B, G, & N modes; NFC is cable of reading / writing via the following speeds: 424 kbit/s Manchester / 10% ASK Manchester, 10% ASK; 212 kbit/s Manchester / 10% ASK Manchester, 10% ASK; 106 kbit/s Modified Miller / 100% ASK Manchester, 10% ASK Integrated module utilizes a USB 2.0 backplane interface.	

Other Transmission Capabilities	
Does the device employ any other methods of non-wired access to transmit or receive any data whatsoever (e.g. anything other than standard hard wired TCP/IP, direct USB, or parallel connections)? ☒ Yes ☐ No If Yes please describe below:	
Purpose: Product contains an integrated WiFi/NFC accessory module consisting of an HP Umber WiFi 802.11n and Near Filed Communication (NFC) radio. The WiFi portion acts in Access Point mode ONLY and provides AP client connection capability. NFC is used to pass NDEF tag data (WiFi SSID, WPA configuration data). The latter is used to enable wireless direct print for mobile devices.	
Frequency: 2.4Ghz to 2.5Ghz ISM band (WiFi); 13.56mhz ISO/IEC 18000-3 (NFC)	Bandwidth: 1Mhz Bandwidth (WiFi); 14Khz bandwidth (+-7Khz off center 13.56Mhz) (NFC)
Modulation: DSSS / OFDM modulation (WiFi)	Effective Radiate Power (ERP): Power output max. 20dBm (WiFi); Power output is 23dBm into an 50 ohm transformer (NFC) which translates to a lower. Note: Power out max for WiFi can be different in some regions and controlled by FW.
Specifications: WiFi has 13 Channel support (@ a spacing of 20MHz) for B, G, & N modes; NFC is cable of reading / writing via the following speeds: 424 kbit/s Manchester / 10% ASK Manchester, 10% ASK; 212 kbit/s Manchester / 10% ASK Manchester, 10% ASK; 106 kbit/s Modified Miller / 100% ASK Manchester, 10% ASK Integrated module utilizes a USB 2.0 backplane interface.	

Other Capabilities
Does the device employ any other method of communications such as a Modem to transmit or receive any data whatsoever? ☐ Yes ☒ No If Yes please describe below:
Purpose:
Specifications:

Author Information			
Name:	Title: Security Technical Marketing Engineer	Email:	Business Unit: IPG
			Date Prepared: 08-12-13

Certificate of Volatility (M830)

Figure C-3 Certificate of Volatility (1 of 2)

Hewlett-Packard Certificate of Volatility		
Model: HP LaserJet Enterprise Flow MFP M830	Part Number: M830dn / M830x+=CF367A	Address: Hewlett Packard Company 11311 Chinden Blvd Boise, ID 83714

Volatile Memory				
Does the device contain volatile memory (Memory whose contents are lost when power is removed)? ☒ Yes ☐ No If Yes please describe the type, size, function, and steps to clear the memory below				
Type (SRAM, DRAM, etc): DDR2 - DRAM	Size: 1.5 GB	User Modifiable: ☐ Yes ☒ No	Function: Used for temporary storage during the process of jobs, and for applications that is running on the OS. (Note: Total memory consists of 512MB on board and an additional 512MB DIMM)	Steps to clear memory: When the printer is powered off, the memory is erased.
Type (SRAM, DRAM, etc):	Size:	User Modifiable: ☐ Yes ☐ No	Function:	Steps to clear memory:
Type (SRAM, DRAM, etc):	Size:	User Modifiable: ☐ Yes ☐ No	Function:	Steps to clear memory:

Non-Volatile Memory				
Does the device contain non-volatile memory (Memory whose contents are retained when power is removed)? ☒ Yes ☐ No If Yes please describe the type, size, function, and steps to clear the memory below				
Type (Flash, EEPROM, etc): SPI Flash	Size: 4 MB	User Modifiable: ☒ Yes ☐ No	Function: Contains the boot code and factory product configuration data required for the device to function. User modifications are limited to downloading digitally signed HP firmware images.	Steps to clear memory: There are no steps to clear this data.
Type (Flash, EEPROM, etc): ICB EEPROM	Size: 32KB	User Modifiable: ☒ Yes ☐ No	Function: Backup device for critical system counters and product configuration information.	Steps to clear memory: There are no steps to clear this data.
Type (Flash, EEPROM, etc): None	Size:	User Modifiable: ☐ Yes ☐ No	Function:	Steps to clear memory:

Mass Storage				
Does the device contain mass storage memory (Hard Disk Drive, Tape Backup)? ☒ Yes ☐ No If Yes please describe the type, size, function, and steps to clear the memory below				
Type (HDD, Tape, etc): Self encrypting Hard drive, SATA2	Size: 320 GB	User Modifiable: ☒ Yes ☐ No	Function: Stores customer data, OS, applications, digitally signed firmware images, persistent data, and temporary data used for processing and system functions	Steps to clear memory: There are several ways to erase this: 1. Secure Storage Erase - Erases temporary files and job data by overwriting information one or three times 3. Secure Disk Erase - Industry standard ATA Secure Erase. Overwrites all data on the hard drive. 4. Secure File Erase - Erases files when jobs finish processing by overwriting them one or three times.
Type (HDD, Tape, etc):	Size:	User Modifiable: ☐ Yes ☐ No	Function:	Steps to clear memory:

Figure C-4 Certificate of Volatility (2 of 2)

USB
Does the item accept USB input and if so, for what purpose (i.e Print Jobs, device firmware updates, scan upload)? ☒ Yes ☐ No If Yes please describe below
Print jobs, HP digitally signed firmware upgrades, 3rd party application loading. Restore encrypted backed-up system settings. USB ports can be disabled.
Can any data other than scan upload be sent to the USB device)? ☒ Yes ☐ No If Yes please describe below
Diagnostic service logs can be uploaded. Print files can be printed via a USB thumb drive.

RF/RFID	
Does the item use RF or RFID for receive or transmit of any data including remote diagnostics. (e.g. Cellular phone, Bluetooth) ☒ Yes ☐ No If Yes please describe below	
Purpose: Product contains an integrated WiFi/NFC accessory module consisting of an HP Umber WiFi 802.11n and Near Filed Communication (NFC) radio. The WiFi portion acts in Access Point mode ONLY and provides AP client connection capability. NFC is used to pass NDEF tag data (WiFi SSID, WPA configuration data). The latter is used to enable wireless direct print for mobile devices.	
Frequency: 2.4Ghz to 2.5Ghz ISM band (WiFi); 13.56mhz ISO/IEC 18000-3 (NFC)	Bandwidth: 1Mhz Bandwidth (WiFi); 14Khz bandwidth (+-7Khz off center 13.56Mhz) (NFC)
Modulation: DSSS / OFDM modulation (WiFi)	Effective Radiate Power (ERP): Power output max is 20dBm for WiFi; (Note: Power out max for WiFi can be different in some regions and controlled by FW). Power output is 23dBm, into an 50 ohm transformer, for NFC; (Note: There will be some "loss" in the antenna and therefore this is not all radiated in to the air.)
Specifications: WiFi has 13 Channel support (@ a spacing of 20MHz) for B, G, & N modes; NFC is cable of reading / writing via the following speeds: 424 kbit/s Manchester / 10% ASK Manchester, 10% ASK; 212 kbit/s Manchester / 10% ASK Manchester, 10% ASK; 106 kbit/s Modified Miller / 100% ASK Manchester, 10% ASK Integrated module utilizes a USB 2.0 backplane interface.	

Other Transmission Capabilities	
Does the device employ any other methods of non-wired access to transmit or receive any data whatsoever (e.g. anything other than standard hard wired TCP/IP, direct USB, or parallel connections)? ☒ Yes ☐ No If Yes please describe below:	
Purpose: Product contains an integrated WiFi/NFC accessory module consisting of an HP Umber WiFi 802.11n and Near Filed Communication (NFC) radio. The WiFi portion acts in Access Point mode ONLY and provides AP client connection capability. NFC is used to pass NDEF tag data (WiFi SSID, WPA configuration data). The latter is used to enable wireless direct print for mobile devices.	
Frequency: 2.4Ghz to 2.5Ghz ISM band (WiFi); 13.56mhz ISO/IEC 18000-3 (NFC)	Bandwidth: 1Mhz Bandwidth (WiFi); 14Khz bandwidth (+-7Khz off center 13.56Mhz) (NFC)
Modulation: DSSS / OFDM modulation (WiFi)	Effective Radiate Power (ERP): Power output max. 20dBm (WiFi); Power output is 23dBm into an 50 ohm transformer (NFC) which translates to a lower. Note: Power out max for WiFi can be different in some regions and controlled by FW.
Specifications: WiFi has 13 Channel support (@ a spacing of 20MHz) for B, G, & N modes; NFC is cable of reading / writing via the following speeds: 424 kbit/s Manchester / 10% ASK Manchester, 10% ASK; 212 kbit/s Manchester / 10% ASK Manchester, 10% ASK; 106 kbit/s Modified Miller / 100% ASK Manchester, 10% ASK Integrated module utilizes a USB 2.0 backplane interface.	

Other Capabilities
Does the device employ any other method of communications such as a Modem to transmit or receive any data whatsoever? ☐ Yes ☒ No If Yes please describe below:
Purpose:
Specifications

Author Information			
Name:	Title: Security Technical Marketing Engineer	Email:	Business Unit: IPG
			Date Prepared: 08-12-13

Safety statements

Laser safety

The Center for Devices and Radiological Health (CDRH) of the U.S. Food and Drug Administration has implemented regulations for laser products manufactured since August 1, 1976. Compliance is mandatory for products marketed in the United States. The device is certified as a “Class 1” laser product under the U.S. Department of Health and Human Services (DHHS) Radiation Performance Standard according to the Radiation Control for Health and Safety Act of 1968. Since radiation emitted inside the device is completely confined within protective housings and external covers, the laser beam cannot escape during any phase of normal user operation.

△ **WARNING!** Using controls, making adjustments, or performing procedures other than those specified in this user guide may result in exposure to hazardous radiation.

Canada - Industry Canada ICES-003 Compliance Statement

CAN ICES-3(A)/NMB-3(A)

VCCI statement (Japan)

この装置は、クラスA情報技術装置です。この装置を家庭環境で使用すると電波妨害を引き起こすことがあります。この場合には使用者は適切な対策を講ずるよう要求されることがあります。

VCCI-A

Power cord instructions

Make sure your power source is adequate for the product voltage rating. The voltage rating is on the product label. The product uses either 100-127 Vac or 220-240 Vac and 50/60 Hz.

Connect the power cord between the product and a grounded AC outlet.

△ **CAUTION:** To prevent damage to the product, use only the power cord that is provided with the product.

Power cord statement (Japan)

製品には、同梱された電源コードをお使い下さい。
同梱された電源コードは、他の製品では使用出来ません。

EMC statement (China)

此为A级产品，在生活环境中，该产品可能会造成无线电干扰。在这种情况下，可能需要用户对其干扰采取切实可行的措施。

EMC statement (Korea)

A급 기기 (업무용 방송통신기기)	이 기기는 업무용(A급)으로 전자파적합등록을 한 기기이오니 판매자 또는 사용자는 이점을 주의하시기 바라며, 가정 외의 지역에서 사용하는 것을 목적으로 합니다.

EMI statement (Taiwan)

警告使用者： 這是甲類的資訊產品，在居住的環境中使用時，可能會造成射頻干擾，在這種情況下，使用者會被要求採取某些適當的對策。

Laser statement for Finland

Luokan 1 laserlaite

Klass 1 Laser Apparat

HP LaserJet Enterprise 700 color MFP M775, laserkirjoitin on käyttäjän kannalta turvallinen luokan 1 laserlaite. Normaalissa käytössä kirjoittimen suojakotelointi estää lasersäteen pääsyn laitteen ulkopuolelle. Laitteen turvallisuusluokka on määritetty standardin EN 60825-1 (2007) mukaisesti.

VAROITUS !

Laitteen käyttäminen muulla kuin käyttöohjeessa mainitulla tavalla saattaa altistaa käyttäjän turvallisuusluokan 1 ylittävälle näkymättömälle lasersäteilylle.

VARNING !

Om apparaten används på annat sätt än i bruksanvisning specificerats, kan användaren utsättas för osynlig laserstrålning, som överskrider gränsen för laserklass 1.

HUOLTO

HP LaserJet Enterprise 700 color MFP M775 - kirjoittimen sisällä ei ole käyttäjän huollettavissa olevia kohteita. Laitteen saa avata ja huoltaa ainoastaan sen huoltamiseen koulutettu henkilö. Tällaiseksi huoltotoimenpiteeksi ei katsota väriainekasetin vaihtamista, paperiradan puhdistusta tai muita käyttäjän käsikirjassa lueteltuja, käyttäjän tehtäväksi tarkoitettuja ylläpitotoimia, jotka voidaan suorittaa ilman erikoistyökaluja.

VARO !

Mikäli kirjoittimen suojakotelo avataan, olet alttiina näkymättömällelasersäteilylle laitteen ollessa toiminnassa. Älä katso säteeseen.

VARNING !

Om laserprinterns skyddshölje öppnas då apparaten är i funktion, utsättas användaren för osynlig laserstrålning. Betrakta ej strålen.

Tiedot laitteessa käytettävän laserdiodin säteilyominaisuuksista: Aallonpituus 775-795 nm Teho 5 m W Luokan 3B laser.

GS statement (Germany)

Das Gerät ist nicht für die Benutzung im unmittelbaren Gesichtsfeld am Bildschirmarbeitsplatz vorgesehen. Um störende Reflexionen am Bildschirmarbeitsplatz zu vermeiden, darf dieses Produkt nicht im unmittelbaren Gesichtsfeld platziert warden.

Das Gerät ist kein Bildschirmarbeitsplatz gemäß BildscharbV. Bei ungünstigen Lichtverhältnissen (z. B. direkte Sonneneinstrahlung) kann es zu Reflexionen auf dem Display und damit zu Einschränkungen der Lesbarkeit der dargestellten Zeichen kommen.

Substances Table (China)

产品中有毒有害物质或元素的名称及含量

根据中国《电子信息产品污染控制管理办法》

部件名称	有毒有害物质和元素					
	铅 (Pb)	汞 (Hg)	镉 (Cd)	六价铬 (Cr(VI))	多溴联苯 (PBB)	多溴二苯醚 (PBDE)
打印引擎	X	0	0	0	0	0
复印机组件	X	0	0	0	0	0
控制面板	X	0	0	0	0	0
塑料外壳	0	0	0	0	0	0
格式化板组件	X	0	0	0	0	0
碳粉盒	X	0	0	0	0	0

0614-13

0：表示该有毒有害物质在该部件所有均质材料中的含量均在 SJ/T11363-2006 标准规定的限量要求以下。
X：表示该有毒有害物质至少在该部件的某一均质材料中的含量超出 SJ/T11363-2006 规定的限量要求。

此表中所有名称中含“X”的部件均符合欧盟RoHS立法。

注：环保使用期限的参考标识取决于产品正常工作的温度和湿度等条件

SEPA Ecolabel User Information (China)

中国环境标识认证产品用户说明

噪声大于 63.0 dB(A)的办公设备不宜放置于办公室内，请在独立的隔离区域使用。

如需长时间使用本产品或打印大量文件，请确保在通风良好的房间内使用。

如您需要确认本产品处于零能耗状态，请按下电源关闭按钮，并将插头从电源插座断开。

您可以使用再生纸，以减少资源耗费。

Restriction on Hazardous Substances statement (Turkey)

Türkiye Cumhuriyeti: EEE Yönetmeliğine Uygundur

Restriction on Hazardous Substances statement (Ukraine)

Обладнання відповідає вимогам Технічного регламенту щодо обмеження використання деяких небезпечних речовин в електричному та електронному обладнанні, затвердженого постановою Кабінету Міністрів України від 3 грудня 2008 № 1057

Eurasian Conformity (Belarus, Kazakhstan, Russia)

EAC

Производитель: Hewlett-Packard Company, 3000 Hanover Street, Palo Alto, California 94304, США.

HP Россия: ЗАО “Хьюлетт-Паккард А.О.”, 125171, Россия, г. Москва, Ленинградское шоссе, 16А, стр.3, тел/факс: +7 (495) 797 35 00, +7 (495) 287 89 05

HP Беларусь: ИООО «Хьюлетт-Паккард Бел», 220030, Беларусь, г. Минск, ул. Интернациональная, 36-1, офис 722-723, тел.: +375 (17) 392 28 18, факс: +375 (17) 392 28 21

HP Казахстан: ТОО «Хьюлетт-Паккард (К)», 050040, Казахстан, г. Алматы, Бостандыкский район, ул. Тимирязева, 28В, 1 этаж, тел./факс: +7 (727) 355 35 50, +7 (727) 355 35 51

Өндіруші: Hewlett-Packard Company, 3000 Hanover Street, Palo Alto, Калифорния 94304, АҚШ

HP Қазақстан: ЖШС «Хьюлетт-Паккард (К)», 050040, Қазақстан, Алматы қ., Бостандық ауданы, Тимирязев к-сі, 28В, тел./факс: +7 (727) 355 35 50, +7 (727) 355 35 51

Additional statements for telecom (fax) products

EU Statement for Telecom Operation

This product is intended to be connected to the analog Public Switched Telecommunication Networks (PSTN) of European Economic Area (EEA) countries/regions.

It meets requirements of EU R&TTE Directive 1999/5/EC (Annex II) and carries appropriate CE conformity marking.

For more details see Declaration of Conformity issued by the manufacturer in another section of this manual.

However due to differences between individual national PSTNs the product may not guarantee unconditional assurance of successful operation on every PSTN termination point. Network compatibility depends on the correct setting being selected by the customer in preparation of its connection to the PSTN. Please follow the instructions provided in the user manual.

If you experience network compatibility issues, please contact your equipment supplier or Hewlett-Packard help desk in the country/region of operation.

Connecting to a PSTN termination point may be the subject of additional requirements set out by the local PSTN operator.

New Zealand Telecom Statements

The grant of a Telepermit for any item of terminal equipment indicates only that Telecom has accepted that the item complies with minimum conditions for connection to its network. It indicates no endorsement of the product by Telecom, nor does it provide any sort of warranty. Above all, it provides no assurance that any item will work correctly in all respects with another item of Telepermitted equipment of a different make or model, nor does it imply that any product is compatible with all of Telecom's network services.

This equipment may not provide for the effective hand-over of a call to another device connected to the same line.

This equipment shall not be set up to make automatic calls to the Telecom "111" Emergency Service.

This product has not been tested to ensure compatibility with the FaxAbility distinctive ring service for New Zealand.

Additional FCC statement for telecom products (US)

This equipment complies with Part 68 of the FCC rules and the requirements adopted by the ACTA. On the back of this equipment is a label that contains, among other information, a product identifier in the format US:AAAEQ##TXXXX. If requested, this number must be provided to the telephone company.

The REN is used to determine the quantity of devices, which may be connected to the telephone line. Excessive RENs on the telephone line may result in the devices not ringing in response to an incoming call. In most, but not all, areas, the sum of the RENs should not exceed five (5.0). To be certain of the number of devices that may be connected to the line, as determined by the total RENs, contact the telephone company to determine the maximum REN for the calling area.

This equipment uses the following USOC jacks: RJ11C.

An FCC-compliant telephone cord and modular plug is provided with this equipment. This equipment is designed to be connected to the telephone network or premises wiring using a compatible modular jack, which is Part 68 compliant. This equipment cannot be used on telephone company-provided coin service. Connection to Party Line Service is subject to state tariffs.

If this equipment causes harm to the telephone network, the telephone company will notify you in advance that temporary discontinuance of service may be required. If advance notice is not practical, the telephone company will notify the customer as soon as possible. Also, you will be advised of your right to file a complaint with the FCC if you believe it is necessary.

The telephone company may make changes in its facilities, equipment, operations, or procedures that could affect the operation of the equipment. If this happens, the telephone company will provide advance notice in order for you to make the necessary modifications in order to maintain uninterrupted service.

If trouble is experienced with this equipment, please see the numbers in this manual for repair and (or) warranty information. If the trouble is causing harm to the telephone network, the telephone company may request you remove the equipment from the network until the problem is resolved.

The customer can do the following repairs: Replace any original equipment that came with the device. This includes the toner cartridge, the supports for trays and bins, the power cord, and the telephone cord. It is recommended that the customer install an AC surge arrestor in the AC outlet to which this device is connected. This is to avoid damage to the equipment caused by local lightning strikes and other electrical surges.

Telephone Consumer Protection Act (US)

The Telephone Consumer Protection Act of 1991 makes it unlawful for any person to use a computer or other electronic device, including fax machines, to send any message unless such message clearly contains, in a margin at the top or bottom of each transmitted page or on the first page of the transmission, the date and time it is sent and an identification of the business, other entity, or individual sending the message and the telephone number of the sending machine or such business, or other entity, or individual. (The telephone number provided cannot be a 900 number or any other number for which charges exceed local or long distance transmission charges).

Industry Canada CS-03 requirements

Notice: The Industry Canada label identifies certified equipment. This certification means the equipment meets certain telecommunications network protective, operational, and safety requirements as prescribed in the appropriate Terminal Equipment Technical Requirement document(s). The Department does not guarantee the equipment will operate to the user's satisfaction. Before installing this equipment, users should ensure that it is permissible for the equipment to be connected to the facilities of the local telecommunications company. The equipment must also be installed using an acceptable method of connection. The customer should be aware that compliance with the above conditions may not prevent degradation of service in some situations. Repairs to certified equipment should be coordinated by a representative designated by the supplier. Any repairs or alterations made by the user to this equipment, or equipment malfunctions, may give the telecommunications company cause to request the user to disconnect the equipment. Users should ensure for their own protection that the electrical ground connections of the power utility, telephone lines, and internal metallic water pipe system, if present, are connected together. This precaution can be particularly important in rural areas.

CAUTION: Users should not attempt to make such connections themselves, but should contact the appropriate electric inspection authority, or electrician, as appropriate. The Ringer Equivalence Number (REN) of this device is 0.0B.

This product meets the applicable Industry Canada technical specifications. / Le présent matériel est conforme aux specifications techniques applicables d'Industrie Canada.

Notice: The Ringer Equivalence Number (REN) assigned to each terminal device provides an indication of the maximum number of terminals allowed to be connected to a telephone interface. The termination on an interface may consist of any combination of devices subject only to the requirement that the sum of the Ringer Equivalence Number of all the devices does not exceed five (5.0). / L'indice d'équivalence de la sonnerie (IES) sert à indiquer le nombre maximal de terminaux qui peuvent être raccordés à une interface téléphonique. La terminaison d'une interface peut consister en une combinaison quelconque de dispositifs, à la seule condition que la somme d'indices d'équivalence de la sonnerie de tous les dispositifs n'excède pas cinq.

The standard connecting arrangement code (telephone jack type) for equipment with direct connections to the telephone network is CA11A.

Vietnam Telecom wired/wireless marking for ICTQC Type approved products

HP
B00502010
ICT

Japan Telecom Mark

T A08-0138004

Index

Symbols/Numerics

3,500-sheet high-capacity input (HCI) 57
  cassette media-size detection and cassette-presence detection 65
  jam detection 66
  motor control 61
  motor failure 62
  pickup/feed operation 63

A

accessories 218, 253
  3,500-sheet high-capacity input feeder 57
  booklet maker 111
  hole punch 68
  stapler/stacker 68
acoustic specifications 593
ADF (automatic document feeder)
  sensors 28
anticounterfeit supplies 583

B

basic product operation 2
batteries included 599
booklet maker 111
  feed and delivery operation 119
  jam detection 125
  jams 538
  motors 118
  staple jams 544

C

Calibrate/Cleaning menu (M806), control panel 328
cartridge
  design 24
  memory 25
  toner level detection 25
  toner seal 25
cartridges
  non-HP 582
  recycling 597
  warranty 581
cautions iii
certificate of volatility (M806) 605
certificate of volatility (M830) 607
circuit diagrams
  general 235
clean the paper path
  cleaning page printing 248
cleaning
  paper path 558
  product 558
  rollers 560
  scanner glass (M830) 558
cleaning page 326, 328
clock 5
cold reset 566
component test
  special mode test 164
components
  DC controller 8
  diagnostic tests 163
  diagrams of 204
configuration page 151
configuration pages
  information 253
  printing 249
connectivity LED 155
connectors
  DC controller PCA 215
control panel 6, 163
  Administration menu 255
  Backup/Restore menu 325
  Calibrate/Cleaning menu (M806) 328
  Calibrate/Cleaning menu (M830) 325
  Copy Settings menu (M830 only) 266
  Display Settings menu 302
  Fax Settings menu (M830 only) 284
  General Settings menu 257
  interpret messages and event log entries 329
  Manage Supplies menu 304
  Manage Trays menu 308
  Network Settings menu 310
  Print Options menu 300
  Print Settings menu 297
  Reports menu 255
  Scan/Digital Send Settings menu (M830 only) 273
  Service menu 329
  troubleshooting menu 322
  troubleshooting tests 163
  USB Firmware Upgrade menu 329
control-panel diagnostic flowcharts 144
control-panel menus 255
conventions, document iii
copy
  improve quality 558
counterfeit supplies 583
counts 564
  copy scan 565
  document feeder 565
  document feeder duplex 565
  document feeder simplex 565
  flatbed cycle 565
  page, reset 564

refurbish cycle 564
send scan 565
current settings pages 138
customer support
online 590

D
date
product first used 566
DC controller
components 8
PCA, connectors 215
DC controller PCA connectors 215
DC voltages 16
defeating
interlocks 156
delivery system 39
demo page 151
diagnostics
component 163
control panel 163
engine 156
LED 151
networks 316
diagrams
block diagrams 205
disposal, end-of-life 599
document conventions iii
document feeder
(ADF) sensors 28
paper-feeding problems 549
document feeder (M830 only)
operations 26
document feeder count
document feeder pages 564
document feeder interval 564
document feeder rollers (M830)
cleaning 560
duplexer
jams 511

E
EIO interface 5
electrical specifications 593
electronic hardware recycling 600
embedded web server 576
end-of-life disposal 599
engine
diagnostics 156
test page 158
engine-control system 7
environmental stewardship program 597
Eurasian conformity 613
event log
clear 495, 564
information 253
print 495
view 495
event-log messages 494

F
fans 12
fax
feeding problems 574
FCC regulations 596
feed and delivery operation
booklet maker 119
feed system 39
feed-and-delivery operation
hole punch 74
hole-puncher assembly 81
stapler/stacker 74
stapler/stacker assembly 87
switchback assembly 77
feeding problems 574
Finnish laser safety statement 610
firmware 576
date codes 253
determine installed revision 576
upgrade 576
version information 251
flash memory card 5
formatter
lights 151
resets after replacing 564
formatter control system 5
formatter lights 151
fraud Web site 583
front door
jams 497
fuser
jams 516
fuser heater protection 15
fuser-control circuit 13

H
hardware integration pocket (HIP) is not functionin 150
HCI (3,500-sheet high-capacity input) 57
cassette media-size detection and cassette-presence detection 65
motor control 61
motor failure 62
pickup/feed operation 63
HCI feeder controller PCA connectors 217
high-voltage power supply (HVPS) 19
hole punch
feed-and-delivery operation 74
jam detection 105
motor failure detection 72
motors 72
hole punch accessory
connection jams 530
jams 527
hole punch motor failure 73
hole-puncher assembly
feed-and-delivery operation 81
hole-uncher assembly
jam detection 108
home button is unresponsive 149
HP Customer Care 590
HP embedded Jetdirect page 251
HP fraud Web site 583
HP Jetdirect Inside (JDI) 5
HP Jetdirect print server
configuration page 251
lights 151
HVPS (high-voltage power supply) 19

I
image quality issues
examples and solutions 553
image-formation
process 23
system 22
imaging drums
diagnostic test 157

individual component
disagnostics 151
initial rotation (INTR) state 3
installation
date calculation 566
interlocks
defeating 156
INTR (initial rotation) state 3
IPv4 information 252
IPv6 information 252

J
jam detection
booklet maker 125
hole puncher assembly 108
stapler/stacker 105
stapler/stacker assembly 109
switchback assembly 106
jams
auto-navigation 496
booklet maker 538
causes of 496, 550
detection 53
diagnostic test for 158
duplexer 511
front door 497
hole punch accessory 527
hole punch accessory connection 530
left door (fuser area) 516
paper 550
right door 503
staple in hole punch accessory 523, 534, 542
stapler/stacker 521, 522, 541
staples in booklet maker 544
Tray 1 500
Tray 2 and Tray 3 506
Tray 4 and Tray 5 507
Japanese VCCI statement 609
JDI (HP Jetdirect Inside) 5
Jetdirect Inside (JDI) 5
Jetdirect print server 251
lights 151

K
Korean EMC statement 610

L
laser safety statements 609, 610
laser/scanner
operations 21
system 21
last rotation (LSTR) state 3
LCD control panel 6
LEDs 151
left door
jams 516
license, software 585
lights
formatter 151
link speed settings 321
locations of major components 222
low-voltage power supply (LVPS) 16
LSTR (last rotation) state 3
LVPS (low-voltage power supply) 16

M
major components, base product 222
major components, high capacity input (HCI) 227
manual print modes 551
manual sensor test 160
material restrictions 599
Material Safety Data Sheet (MSDS) 600
memory
flash card 5
information 249
RAM 5
ROM 5
toner cartridge 25
memory chip, toner cartridge
description 584
menu map 130
menus, control panel
Calibrate/Cleaning (M806) 328
mercury-free product 599
motor control
HCI 61
motor failure detection
HCI 62
motors 11
booklet maker 118
failure detection in hole punch 72
failure detection in stapler/stacker 72
hole punch 72
paper path 42
stapler/stacker 72

N
networks
diagnostics 316
HP embedded Jetdirect configuration page 251
link speed settings 321
no control-panel sound 148
non-HP supplies 582
nonvolatile memory (NVRAM) 5
notes iii
NVRAM (nonvolatile memory) 5

O
online support 590
operations
basic product 2
engine-control system 7
laser/scanner 21
scanner 26
sequence of 3
over-current protection 18
over-voltage protection 18

P
pages 564
paper
default size reset 566
jams 496
stop in path for testing 163
paper jams
booklet maker 538
duplexer 511
front door 497
fuser 516
hole punch accessory 527
hole punch accessory connection 530
right door 503
stapler/stacker 521, 522, 541
Tray 1 500
Tray 2 and Tray 3 506
Tray 4 and Tray 5 507

paper movement
operation 39
paper path
stop movement for testing 163
paper pickup problems
solving 549
paper-path
test, sensors 159
password
Service menu PIN 564
photo sensors 40
physical specifications 592
pickup, feed, and delivery system 39
plug/jack locations 220
power
consumption 593
power subsystem 140
power supply
troubleshooting 140
preboot menu options 131
print quality
built-in troubleshooting pages 245
manual print modes 551
test pages 245
troubleshooting 553
PRINT state 3
Print Test Page 259
printing
modes, manual 551
stop for testing 163
problem-solving
event-log messages 494
networks 316
Process Cleaning Page 326
product cold reset 568
product resets 567

R

RAM (random access memory)
product 5
toner cartridge 25
random access memory (RAM)
product 5
toner cartridge 25
read only memory (ROM) 5
recycling 597
electronic hardware 600
HP printing supplies returns and environmental program 598
restore factory settings 567
restore the service ID 568
right door
jams 503
ROM (read only memory) 5

S

safety statements 609, 610
scanner
operations 26
tests M830 202
scanner glass
cleaning 558
scanner settings 565
seal
toner cartridge 25
security settings information 251
sensors
diagnostic tests 159
tests, manual 160
tests, manual tray/bin 161
sensors and switches
paper path 40
sequence of operation 3
serial number 565
Service ID
convert to date 566
restore 566
Service menu options 564
service mode functions 564
settings
restore factory 567
side registration motor failure 73
size specifications, product 592
software
software license agreement 585
solenoids
paper path 42
solve problems 127
solving
direct-connect problems 562
specifications
electrical and acoustic 593
physical 592
SS (stapler/stacker)
feed-and-delivery operation 74
jam detection 105
motor failure detection 72
motors 72
stacker
staple jams 523, 534, 542
standby (STBY) state 3
staple jams
booklet maker 544
stapler/stacker 523, 534, 542
stapler/stacker
jams 521, 522, 541
staple jams 523, 534, 542
stapler/stacker (SS) 68
feed-and-delivery operation 74
jam detection 105
motor failure detection 72
motors 72
stapler/stacker assembly
feed-and-delivery operation 87
jam detection 109
status event log 151
status, fax accessory page 573
STBY (standby) state 3
stop printing for test 163
supplies
counterfeit 583
non-HP 582
recycling 597
support
online 590
switchback assembly
feed-and-delivery operation 77
jam detection 106
switches
fuser 13
paper path 40

T

Taiwan EMI statement 610
TCP/IP information 252
technical support
online 590
temperatures
abnormal 15

tests
component tests list and descriptions 164
disable cartridge check 157
engine 158
manual sensor 160
networks 316
paper path 158
paper-path sensors 159
print/stop 163
scanner M830 202
scanner tests 202
tray/bin manual sensor 161
timing chart 234
tips iii
toner cartridge 24
design 24
memory 25
seal 25
toner level detection 25
toner cartridges
diagnostic test 157
memory chips 584
non-HP 582
recycling 597
warranty 581
touchscreen blank, white, or dim (no image) 145
touchscreen control panel 6
touchscreen has an unresponsive zone 147
touchscreen is slow to respond 146
Tray 1
jams 500
Tray 2 and Tray 3
jams 506
Tray 4 and Tray 5
clear jams 507
tray selection - use requested tray 308
troubleshooting 127, 151
checklist 128
clean the paper path 248
configuration page 151
configuration pages 249
connectivity problems 562
control panel 163
control-panel checks 141
copying quality, 553
demo page 151
determine problem source 139, 562
direct-connect problems 562
event log 151
flowchart 139
image quality issues 553
jams 496, 550
LED diagnostics 151
network problems 562
paper feed problems 549
performance problems 561
power 140
power-on overview 140
print quality 245, 254
print quality issues 553
process 139
repeating defects 254
repetitive defects ruler 254
reports and tools 151
scanner calibration 150
scanning subsystem 150
solving paper pickup problems 549
status page 151
wired network 562
with lights 151

U

understand the lights on the formatter
connectivity LED 155
heartbeat LED 152
heartbeat LED, product 152
heartbeat LED, product operating 155
HP Jetdirect LEDs 155
upgrades, downloading product 576
USB flash drive 577, 578
USB interface 5
Use Requested Tray 308

V

voltages
DC 16
over-current protection 18

W

WAIT state 3
warnings iii
warranty
customer self repair 589
license 585
product 580
toner cartridges 581
warranty date information 566
waste disposal 600
Web sites
customer support 590
fraud reports 583
Material Safety Data Sheet (MSDS) 600

© 2013 Hewlett-Packard Development Company, L.P.

www.hp.com

CZ244-90967