OFFICEJET PRO X476 AND X576
MFP SERIES

Troubleshooting Manual

HP Officejet Pro X476 and X576 MFP Series

Troubleshooting Manual

Copyright and License

© 2013 Copyright Hewlett-Packard Development Company, L.P.

Reproduction, adaptation, or translation without prior written permission is prohibited, except as allowed under the copyright laws.

The information contained herein is subject to change without notice.

The only warranties for HP products and services are set forth in the express warranty statements accompanying such products and services. Nothing herein should be construed as constituting an additional warranty. HP shall not be liable for technical or editorial errors or omissions contained herein.

CN598-90006

Edition 2, 12/2013

Trademark Credits

Adobe®, Acrobat®, and PostScript® are trademarks of Adobe Systems Incorporated.

Intel® Core™ is a trademark of Intel Corporation in the U.S. and other countries.

Java™ is a US trademark of Sun Microsystems, Inc.

Microsoft®, Windows®, Windows® XP, and Windows Vista® are U.S. registered trademarks of Microsoft Corporation.

UNIX® is a registered trademark of The Open Group.

ENERGY STAR and the ENERGY STAR mark are registered U.S. marks.

Conventions used in this guide

TIP: Tips provide helpful hints or shortcuts.

NOTE: Notes provide important information to explain a concept or to complete a task.

CAUTION: Cautions indicate procedures that you should follow to avoid losing data or damaging the product.

WARNING! Warnings alert you to specific procedures that you should follow to avoid personal injury, catastrophic loss of data, or extensive damage to the product.

Table of contents

1 Theory of operation 1

Basic operation 2

Function structure 2

Operation sequence 3

System control 6

Formatter and data path 6

Engine control 7

Pen interface (I/F) 9

Power supply 10

Print subsystem 11

Printbar 11

Printbar air management system 13

Printbar lift 13

Ink cartridges 13

Optical scan carriage 13

Print system operational states 13

Paper-handling system 16

Input trays 21

Paper path zones 22

Servicing system 26

Service sled 27

Transmission system 28

Components 29

States 29

Aerosol management system 31

Document feeder 33

Document feeder operation 33

Document feeder paper path and sensors 33

Document feeder jam detection 34

Scanner system 35

Scanner power-on sequence of events 35

Copy or scan-to-computer sequence of events 36

Fax functions and operation 37
Computer and network security features 37
PSTN operation 37
The fax subsystem 37
Fax card in the fax subsystem 38
Fax page storage in flash memory 39

2 Solve problems 41
Restore the factory-set defaults 42
Menu access 42
Access the Engineering menu 42
Access the Support Menu 42
Place the product into MFG (manufacturing) mode 43
Place the product into Audit mode 43
Perform tap tests and interpret results 44
10 tap test results (OOBE states) 44
12 tap test results (REDI sensor values) 46
61 tap results (Align & color calibrations) 47
909 tap test results (BDD status) 48
Troubleshooting flowchart 50
Front-panel error codes 52
Control-panel messages 58
Error-related symptoms 66
Check symptoms 67
Power and electronics 67
Solve print quality problems 69
Solve paper handling problems 92
Solve product connectivity problems 113
Solve copy/scan problems 120
Solve fax problems 129
Solve memory device problems 142

Index 143

List of figures

Figure 1-1 Main components 2
Figure 1-2 System control 6
Figure 1-3 Print subsystem components 11
Figure 1-4 Printbar components 12
Figure 1-5 Paper-handling system paper path 16
Figure 1-6 Product sensors 18
Figure 1-7 Paper-handling-system motors 20
Figure 1-8 Paper path zones 23
Figure 1-9 Servicing system components 26
Figure 1-10 Service sled components 27
Figure 1-11 Transmission components, rear view 28
Figure 1-12 Transmission main components 29
Figure 1-13 Aerosol management process 31
Figure 1-14 Aerosol management system components 32
Figure 1-15 Document feeder paper path and sensors 34
Figure 2-1 X476/X576 control panel button locations 42
Figure 2-2 10 tap test results 45
Figure 2-3 12 tap test report 47
Figure 2-4 61 tap test results 48
Figure 2-5 909 tap test results 49
Figure 2-6 Printer status report–determining genuine HP ink usage 72
Figure 2-7 Mark the Web wipe 85
Figure 2-8 Tray lift mechanism 94

1 Theory of operation

- Basic operation
- System control
- Print subsystem
- Paper-handling system
- Servicing system
- Transmission system
- Aerosol management system
- Document feeder
- Scanner system
- Fax functions and operation

Basic operation

Function structure

The product consists of the following components.

Figure 1-1 Main components

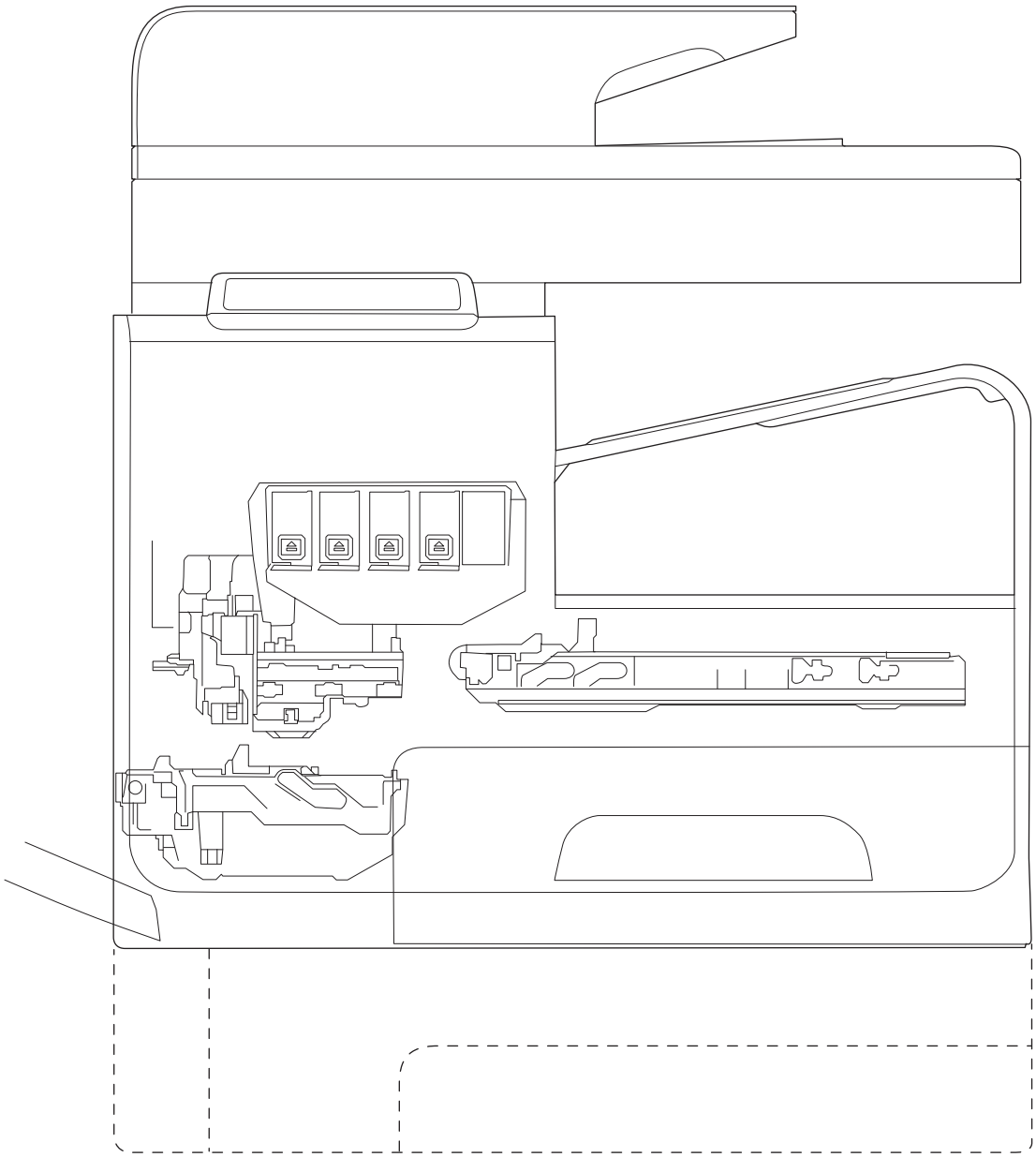

The product contains the following systems. See

- Engine control system
- Print subsystem
- Paper-handling system

- Servicing system
- Aerosol management system
- Scanner and document feeder system

Two elements influence the product architecture.

- The first is the need to orient the printbar with its active face downwards and statically located above the print media. This requires the printbar to move vertically to access its active face.
- The second is producing face-down output. Rather than ejecting the page face-up immediately after the ink is applied, as do many inkjet products, the printed page is routed up and back over the printbar to eject face-down.

Operation sequence

The engine-control system on the formatter PCA controls the operational sequences. The following table describes durations and operations for each period of a print operation from when the product is turned on until the motor stops rotating.

Table 1-1 Operation sequence

Period	Duration	Purpose
Initial startup and calibrations	When the product is set up for the first time from the factory.	This period gets the product ready to print for the first time. • The product flushes the shipping and handling fluid out of the printbar and replaces it with ink. • Die alignment — The product aligns the 10 die on the printbar active face. • Die density leveling — The product measures and compensates for the drop variation.
Servicing operations	Performed when the printbar is entering the capping state after printing, when leaving capping state after a print job is initiated, or during extended print jobs.	Servicing maintains the print quality by ensuring debris and excess ink are removed and missing nozzles are replaced. • Nozzle presence detection — The optical scan carriage detects and disables inoperable nozzles, and replaces them with operable nozzles. • Printbar servicing—The Web wipe on the service sled moves under the printbar to clean the active face and fire the nozzles into the maintenance ink module to clear clogs.

Table 1-1 Operation sequence (continued)

Period	Duration	Purpose
Print preparation	From the time the product receives a product command until paper enters the print zone.	Prepares the product for a print job. • The printbar leaves the capping state as the service sled moves away from the printbar. • If needed, some servicing occurs. • The printbar lowers to the printing position. The media type and printing mode determine the print zone height. • The product picks media from one of the input trays. • Every page from Tray 1 is scanned. For Tray 2 and optional Tray 3, the product performs media edge detection after printing the first sheet after the main or optional tray is loaded. The last sheet of each job is also scanned if at least five sheets have been printed. • The product monitors environmental conditions. The product can slow the print speed if conditions are significantly different than a normal office environment (23° C (73.4° F), 50% relative humidity). • The formatter PCA processes print data and transmits the data to the printbar.
Printing	From the end of the preparation period until the last sheet is delivered.	Processes the print job. • As the page travels through the print zone, the printbar applies ink to the page. • Simplex print job–the page moves up, over the printbar, and out to the output bin (face-down). • Duplex print job–the page moves up until the trailing edge is 40 mm (1.5 inches) past the star-wheel jam reflective sensor, then it reverses direction down through the duplex path underneath the maintenance ink module, and then it reenters the print zone where the printbar applies ink to the second side. • The process continues until all the pages of the print job are completed. The process can be interrupted by occasional nozzle presence detection and servicing events if the job includes many pages.

Table 1-1 Operation sequence (continued)

Period	Duration	Purpose
End of print job	Performed after the print job is completed, and continues until the next job is initiated.	This period puts the product in a state where it's ready for the next print job. • If needed, some servicing occurs. • The printbar moves to the capping position after a short dwell interval. • The service sled moves to cap the printbar.
Standby	The product is sitting idle, waiting for the next print job to be initiated.	This period is intended to conserve energy when the product is sitting idle. Certain functions might be disabled to save power, then are re-started only when needed. The product has three sleep modes: • Idle mode—The printbar is capped and the product is ready to immediately start a new job • Sleep1 mode—After the product is inactive for about 10 minutes (a setting that can be adjusted from the control panel), the control panel dims and the power LED blinks to indicate the unit is in Sleep1. All product functions are available. • Sleep2 mode—After the product is inactive for a longer period of time (typically 2 hours, a setting that can be adjusted from the control panel), the engine controller powers down to minimize power consumption.

System control

The system control coordinates all the other systems, according to commands from the formatter.

Figure 1-2 System control

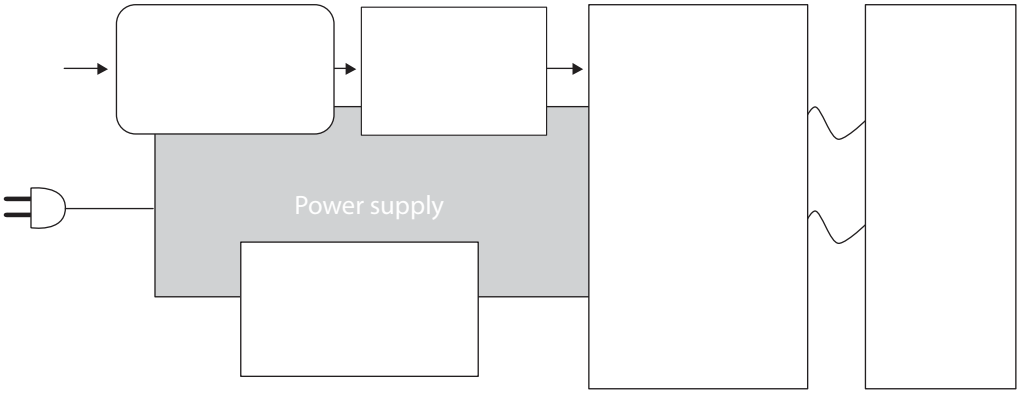

The system consists of five major sections.

- Formatter
- Data path
- Engine control
- Pen interface
- Power supply

The engine PCA integrates both formatter and engine control electronics onto a single assembly. The wireless radio unit (wireless models only) plugs into the back of the engine PCA, and the fax connects via a short flat-flexible cable (FFC).

Formatter and data path

The formatter controller ASIC controls the input/output (I/O) control, the user interface, and the rendering of page description language files into product-specific commands.

Input/output (I/O) control

The product supports 10/100 Ethernet, 802.11 wireless (wireless models), a rear USB host port, a control panel USB host port, and analog fax port. For Ethernet networks, the formatter ASIC uses a separate integrated circuit (Broadcom 5241) to provide the physical network layer.

The formatter ASIC controls the USB device and USB host as well.

Wireless I/O is provided via a separate radio module.

User interface

The product contains a 4.3-in color graphics display. For wireless models, there is an additional LED to denote that the wireless feature is enabled. The control panel includes a USB host port for connection to thumb drives.

Formatter digital ASIC

The formatter digital ASIC has dual ARM CPUs (792 MHz and 528 MHz) that execute firmware code that provides high-level device control. The digital ASIC uses a standard PCIe interface to pass data to the engine control ASIC.

Formatter analog ASIC

The formatter analog ASIC generates the system voltage for the formatter, drives the scanner and ADF motors, manages the real-time clock, and drives the fax speaker. Also, the engine uses this ASIC to drive the ISS pumps, solenoids, and aerosol fan.

Real-time clock

The real-time clock (RTC) allows the fax module to time-stamp outgoing faxes. In addition, it determines the elapsed time between printhead and ISS calibration events. The RTC uses a special block inside the engine analog ASIC, along with a crystal and a battery.

Engine control

The engine controller digital ASIC receives high-level commands from the formatter, and it then provides low-level control to the print mechanism. In particular, the engine controller digital ASIC and its firmware control motors, system sensors, and the printbar. The engine controller analog ASIC integrates motor drivers, voltage regulators, sensor interfaces, and supervisory circuits.

Engine controller digital ASIC

The engine controller digital ASIC has a high-performance 480 MHz ARM CPU and DSP co-processors that execute firmware code to provide low-level engine control. It also drives the printbar via 15 high-speed LVDS transmission lines, which are routed from the engine PCA to the printbar via two large FFC cables. The engine controller digital ASIC receives pre-rendered data from the formatter digital ASIC over a standard PCIe interface.

In some product sleep modes, the digital ASIC powers down. If a print job is received while the product is in this mode, power resumes to the digital ASIC, which then must “boot up”. This can take approximately 15 seconds, which will delay the first page out (FPO) time accordingly. This sleep mode typically begins after two hours of product inactivity, although the user can change this setting.

Engine controller analog ASIC

The engine uses two analog ASICs to generate the system voltages for the engine, drive the engine motors, control various engine sensors, and monitor printbar power delivery for correct operation.

The engine has seven motors, some of which are shared with other subsystems:

- Pick motor
- Feed motor
- Duplex motor
- Lift motor

- Eject motor
- Sensor carriage motor
- Aerosol fan motor

Each one is a DC motor with encoder feedback, to provide precision servo control. These motors are driven directly by one of the engine analog ASICs. Small DC motors also are used to drive the ISS pump and the aerosol fan. There are solenoids that actuate the ejection flap and the ISS priming system.

The product uses many sensors to track the media as it travels through the paper path. Most of these are optical REDI sensors, which are used in conjunction with mirrors to sense the presence or absence of paper in a particular location. These are carefully aligned and calibrated at the factory, so care must be taken when servicing these sensors. See the Remove and Replace chapter in the repair manual for more details.

Other printed circuit-board assemblies (PCAs)

In addition to hosting the system ASICs, the engine PCA is home to many circuits needed to interface to sensors and other sub-system components. In some cases, this circuitry is located on a smaller remote PCA (SLB) to optimize cable interconnects.

- Humidity sensor—The humidity sensor causes the product to adjust printing speed if ambient conditions are outside the optimal humidity range. This sensor is calibrated at the factory to ensure maximum accuracy.
- Temperature sensor–The temperature sensor causes the product to adjust printing speed if ambient conditions are outside the optimal temperature range. In some products, this sensor resides on a separate, remote PCA.
- Main tray presence sensor–The hall-effect sensor that detects if the main tray is properly engaged resides on the back of the engine PCA. A small magnet on the back of the main tray actuates the sensor. If the tray is fully engaged, the magnetic field strength is sufficient to trigger the sensor.

Additionally, the product includes the following PCAs:

- Front USB PCA–This PCA governs the control panel USB port.
- Fax PCA–This PCA governs the product fax module.
- Duplex module presence sensor–A hall-effect sensor that detects that the duplex module is properly seated.
- Power button PCA–This PCA includes the power button and power LED, as well as interface cables to the duplex module presence sensor and the MP tray empty REDI sensor.
- Accessory tray interconnect PCA–This PCA provides communication to optional Tray 3.
- Pick encoder distribution PCA–This PCA includes the pick motor encoder and the pick motor interconnect cable.
- Eject encoder distribution PCA–This PCA includes the eject motor encoder, plus the interconnect cables to the eject motor and the aerosol fan.

- Print zone distribution PCA–This PCA joins interconnect cables to the following sensors: separator REDI, feed motion encoder, main tray empty sensor, Top of Form (TOF) REDI sensor, and the Print zone REDI sensor.
- REDI distribution PCA—This PCA includes hall-effect sensors that detect ink cartridge door and left door positions. It also combines the interconnect cables for the Eject REDI sensor, the Upper paper path REDI sensor, the Lower paper path REDI sensor, and the eject flap opto flag sensor.
- Sensor carriage PCA — This PCA includes a carriage motion encoder, a ZIM sensor, and the BDD sensor.
- Printbar lift encoder distribution PCA — This PCA includes the printbar lift motion encoder, and combines interconnect cables to the printbar lift motor, carriage motor, and eject flap solenoid.
- Duplex encoder PCA — This PCA contains the motion encoder for the duplex motor.
- SHAID PCA — This PCA contains interfaces to the out-of-ink sensors for the ink cartridges, and combines the interface cables to the acumen PCA, the ISS pump, and the ISS solenoids.
- Acumen PCA — This PCA contains interfaces to the acumen memory devices for the ink cartridges.

Pen interface (I/F)

The printbar is the key component that differentiates this product from other inkjet products. The conventional approach is to print a page in horizontal swaths by moving a “scanning” printhead horizontally over a fixed sheet of paper, advancing the paper a fixed amount, and then printing the next swath. With this product, the paper moves underneath a fixed page-wide printhead in a single smooth motion.

Single pass page-wide printing requires that data and power be delivered to the printbar at a very high rate, while also maintaining good control of paper position as it moves past the printhead nozzles.

The engine PCA sends power and data to the printbar via two large flat flexible cables (36 and 38 pins). The printbar PCA routes power and data to 10 printhead die, which are attached to the PCA using a flexible tab circuit and wire-bonding process.

There are also electronics to control the ink supply station (ISS). The SHAID PCA detects low-ink conditions. It gauges ink levels by means of electrically sensing the presence of ink and/or ink foam in the X-chamber. The SHAID PCA also collects and distributes electrical signals that drive the push-prime pump(s), engage the solenoids, and read the ink supply acumen data. All are routed through a single 17-pin FFC from the SHAID PCA to the engine PCA.

Each ink supply has a memory tag that stores information about its type of ink, the amount of ink remaining, and other critical data. It uses a special authentication scheme to ensure that only genuine HP supplies are used and the product is not damaged by using invalid supplies. Acumen uses a two-line serial bus, which, along with 3.3 V and ground, is cabled via the SHAID PCA to the engine PCA and the engine control digital ASIC.

Power supply

The power supply module converts 100-240 VAC to 33 VDC to power the system. The power supply module has a sleep mode that reduces power consumption in system low-power modes. When in its sleep mode, the power supply generates approximately 12 V.

The power supply module supplies 33 V to the engine PCA. The power supply module has two operating modes, depending upon the state of its nSLEEP input pin:

- Normal mode: Vo = 33 V (nSLEEP = high logic level)
- Sleep mode: Vo = 12 V (nSLEEP = low logic level)

The power supply is a self-contained module that can be replaced if it is determined to be defective (see the Remove and Replace chapter of the Repair Manual).

To ensure safe operation, the power supply will “latch off” if a persistent over-current fault condition exists. This would typically be caused by a short-circuit from 33 V to ground in the product. In addition, less severe faults can cause the power supply to latch off, if present for an extended period of time, or if the product is operated above the recommended operating range.

NOTE: In some countries/regions, the product is equipped with a high-voltage power supply in order to prevent power supply unit failures due to over-voltage conditions.

Print subsystem

The print subsystem includes the following components.

- Printbar
- Printbar lift
- Ink cartridges
- Optical scan carriage

Figure 1-3 Print subsystem components

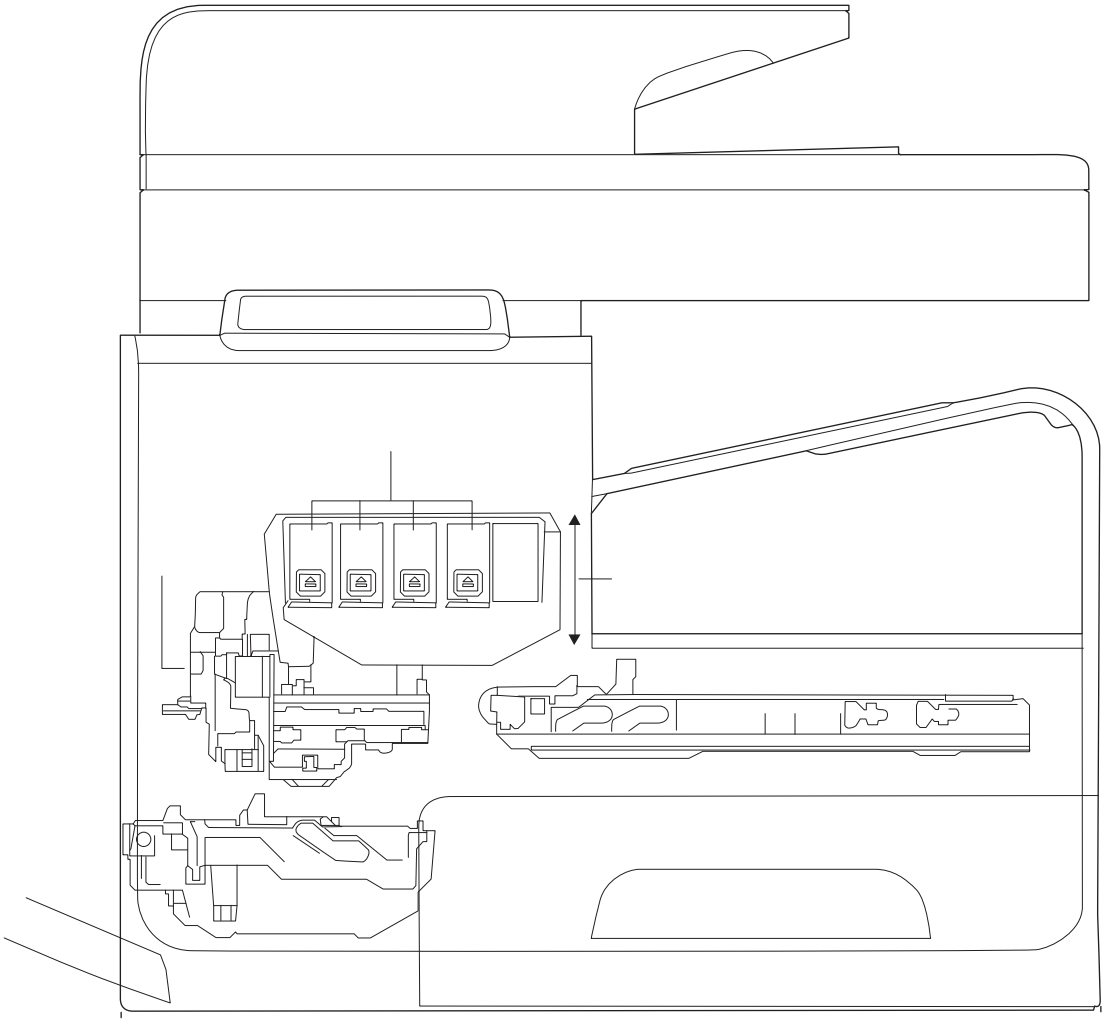

Printbar

The printbar's fundamental purpose is to convert the digital firing instructions from the product electronics into properly formed and timed microscopic drops of the four ink colors. The printbar spans the full width of a letter/A4-size sheet (216 mm (8.5 in)), which allows the printbar to be

statically positioned within the product and have the media move underneath it, printing the entire page in a single motion.

Figure 1-4 Printbar components

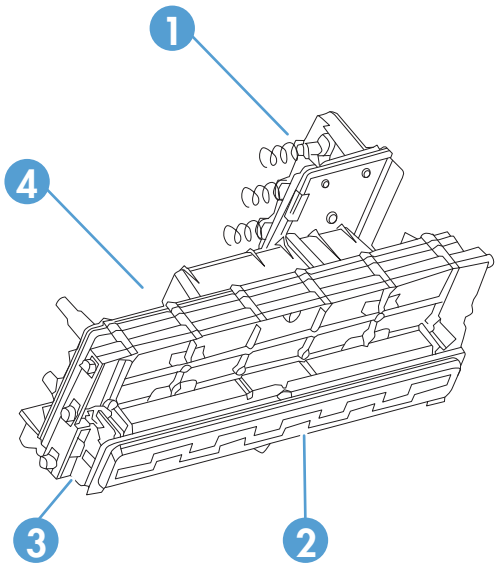

Table 1-2 Printbar components

Item	Description
1	Ink cartridge connections
2	Thermal inkjet (TIJ) die array
3	Data/power flow and regulation
4	Inkflow channels and pressure regulation

The printbar has a fixed array of 10 thermal inkjet (TIJ) die oriented in two staggered rows. Each die contains more than 1,000 nozzles for each of the four ink colors (black (K), cyan (C), magenta (M) and yellow (Y)). Behind the die array are the ink flow channels and pressure regulation mechanisms that supply the die array with ink at the proper pressure and flow. The die must also be fed power and data at the appropriate levels and rates, which is the function of the onboard electronic circuitry. Finally, situated at the top of the printbar, there are four ink cartridge receptacles, one for each color. These cartridges are linked by flow connections to the rest of the printbar and supply the ink necessary for its operation.

A sensor technology called back-scatter drop detect (BDD) monitors printbar health and calibrations. This system looks at the reflection of the miniscule drops in flight, and then passes these signals through high-speed, high-gain, bandpass filters. A complex artificial intelligence (AI) system decides which drop ejectors are currently out of specifications, and which are not.

After the AI system determines which drop ejectors are out of specification, the product compensates for them. Some ejectors use neighboring nozzles and at times even tiny amounts of other inks – whichever combination of methods necessary to deliver the best print quality possible at that moment. In some cases, fully half of the nozzles can be “out” without a noticeable degradation in quality. The compensation is done in real time with a dedicated high-speed DSP. The system can scan portions of the system after print jobs, but it is fully interruptible by new incoming print jobs.

Printbar air management system

The printbar uses a passive airgain management system. Air can enter the printbar from the following sources:

- Die outgassing (from air in the ink)
- Air entering nozzles due to temperature / pressure variations
- Air entry through the printbar structure
- Air entry through the nozzles due to shipment vibration

Air that enters the printbar is warehoused. There is no mechanism to remove the air in the field. Of the various mechanisms for air entry, the first three are generally benign, and rarely cause issues during the expected life of the product. The fourth mechanism generally occurs during shipment. New products are shipped with the printbar taped–which limits the amount of air gained. If the printbar isn't well restrained during shipment, then air gain can be significant. If the product is shipped after removal of the printbar tape, airgain can be reduced either by ensuring that the poduct stays on its base, or that the printbar is restrained. Both would be best.

Printbar lift

The printbar lift is responsible for positioning the printbar it within the product and moving it up and down as required. This vertical motion is both to establish proper spacing to the paper during printing, and to raise it to either access the active face or perform necessary calibrations.

During printing, the lift mechanism sets the printbar height and paper height depending on the type of paper.

Ink cartridges

This product has new, state of the art pigmented inks. These inks are filtered using proprietary processes to prevent printhead contamination. These inks are designed to produce optimal print quality on ColorLok office papers, but also produce very good print quality on regular office papers and specialty media.

Optical scan carriage

The optical scan carriage has optical sensors used for calibration. Its motion is along the long axis of the printbar. These sensors are used by a number of in-product calibration features that are important for proper subsystem function. The BDD sensor is located on the optical scan carriage.

Print system operational states

The print subsystem has a number of distinct operational states besides active printing.

Startup

As it comes from the factory, the printbar is initially filled with an inert ink-substitute called Shipping and Handling Fluid (SHF). This fluid, essential for the manufacture and transportation of the printbar,

must be flushed and replaced with actual ink. This is accomplished during the startup phase. The flushing process automatically commences when ink supplies are inserted and the unit powered up for the first time. The SHF is removed by sustained printbar operation and replaced by ink from the supplies. The process terminates once all the SHF has been flushed from the printbar.

Special host supplies are supplied with the product prior to its first use. These supplies contain additional ink so that the SHF can be replaced with ink, and there will still be a 100 percent of ink level. These supplies can be used only to initialize the product. You cannot use them in another product that has been initialized.

NOTE: The initial startup time is noticeably longer than the following regular startup times.

Die alignment

Since there are 10 die comprising the printbar active face, each with associated positional tolerances, an active calibration must be performed to prevent errors and allow a uniform ink application to the media (without any gaps or overlaps between adjacent die). This die alignment is done by printing a special diagnostic image on a sheet of paper and then scanning it with the optical scan carriage. Die alignment is performed as part of initial unit startup, and can be performed manually as part of the print quality recovery tool.

Die density leveling

There are also tolerances associated with the drops fired by the individual printbar die. Another active calibration measures and compensates for these variations to produce a visually uniform ink application to the media. Another set of diagnostic images is printed and scanned by the optical scan carriage to achieve this die density leveling. Die alignment and die density leveling are usually paired together.

Nozzle presence detection

In printing, since all the ink is applied in a single smooth motion of the media past the printbar, any inoperable nozzle can show up as a noticeable streak. The operational state of each of the thousands of nozzles comprising the printbar is periodically measured after a certain amount of printing. The printbar is raised by the printbar lift, and the BDD assembly on the optical scan carriage watches for drop presence as each nozzle is fired. Inoperable nozzles are turned off and other operable nozzles employed on subsequent printed pages to apply the missing ink. Nozzle presence detection can be interrupted by new incoming print jobs.

Media edge position detection

The product employs a learning algorithm to define media center as a function of input source– multipurpose tray, main tray, or accessory tray. The edge scan is located downstream of the print zone. As media is scanned, the media center database is updated. The image is registered to the page using the media center database.

Servicing and capping

When not in use, the printbar is normally in the capped state – the printbar is fully raised, the service sled is positioned underneath, and the printbar cap engaged against the printbar active face.

Servicing – the cleaning of the active face and the firing of the nozzles–can occur either during Sleep2 mode or after extended time in storage. It can also occur during extended print jobs.

Printing

The printing state begins by the printbar leaving the capping state, and being lowered to the printing position after the service sled moves out of the way. Concurrently, a sheet of media is picked from one of the trays and the leading edge staged at the entrance to the print zone. Once the print data has been processed and is available for transmission to the printbar, the sheet is fed at a constant velocity through the print zone and the ink applied by the printbar.

In the case of one-sided printing the inked sheet is moved up, over and out to the output tray. For two-sided printing the sheet is moved until its trailing edge is past the merge to the vertical path and then it is reversed, through the duplex path underneath the maintenance ink module, and reintroduced into the print zone for inking of the second side.

This process continues until all the pages of the print job are completed. If the print job is large enough, it can be interrupted by servicing processes.

Paper-handling system

The paper-handling system moves paper through the product according to commands from the formatter.

The following figure shows the product paper path.

Figure 1-5 Paper-handling system paper path

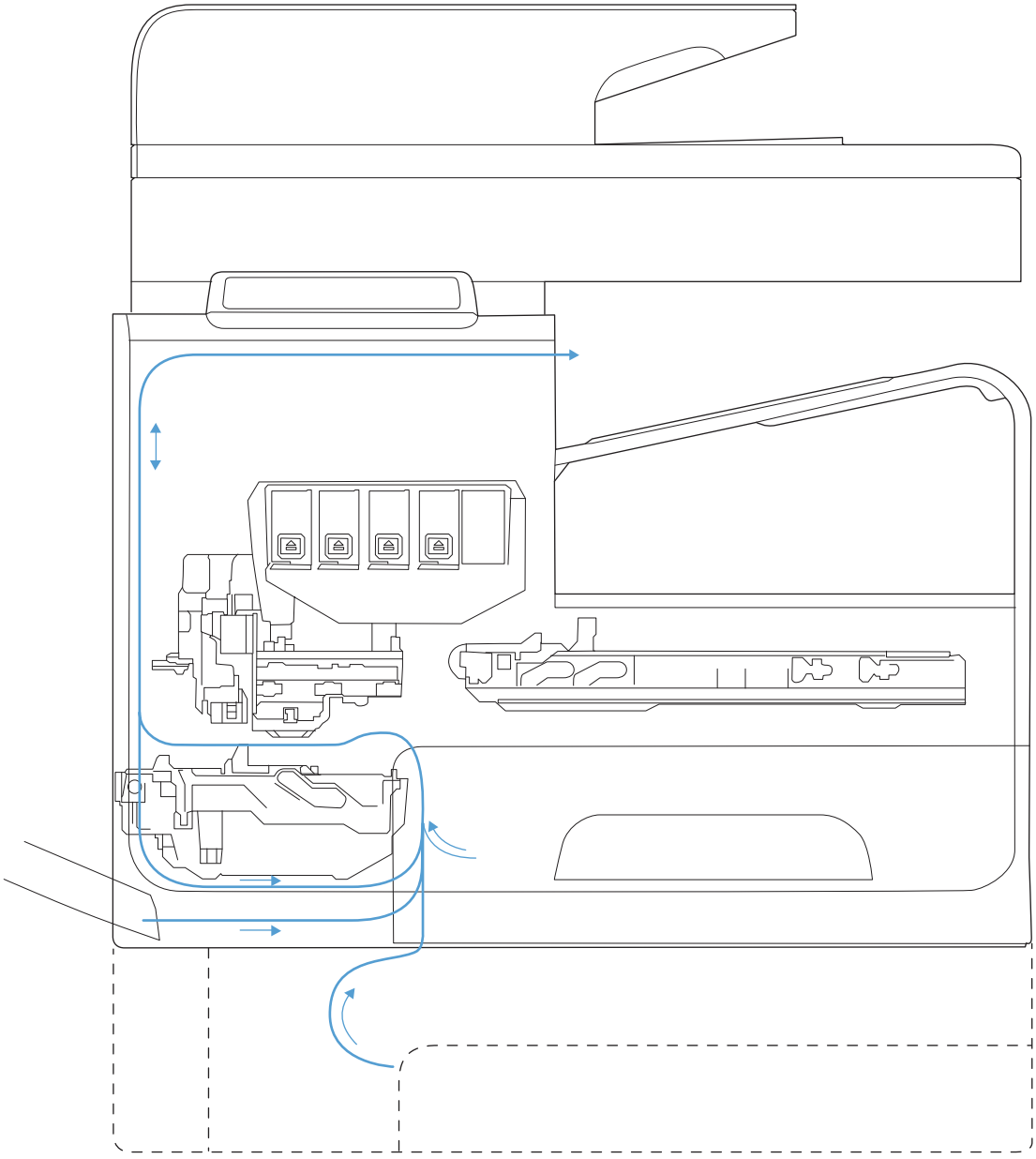

The paper path consists of the following major components:

- Two integrated input trays plus one optional accessory tray
- Four motors and a solenoid plus two more motors in the accessory tray

- Duplex module
- Sensors placed throughout the device, including the paper trays
- Multiple feed rollers, pinch rollers, star wheels, and media guides
- Transmission components (gears, shafts, levers, swingarms) that interface with other subsystems such as the printbar and service sled.

Components of the paper path move the paper from the desired input tray to a position underneath the printbar, and then deliver the printed result to the output tray. It is the combined orientations and actions of the printbar, the printbar lift, and the paper path that establish the print zone, which is the precisely controlled region in which the ink drops move from the active face of the printbar to the paper situated 1 to 2 mm beneath it.

The following figure shows the product sensors.

Figure 1-6 Product sensors

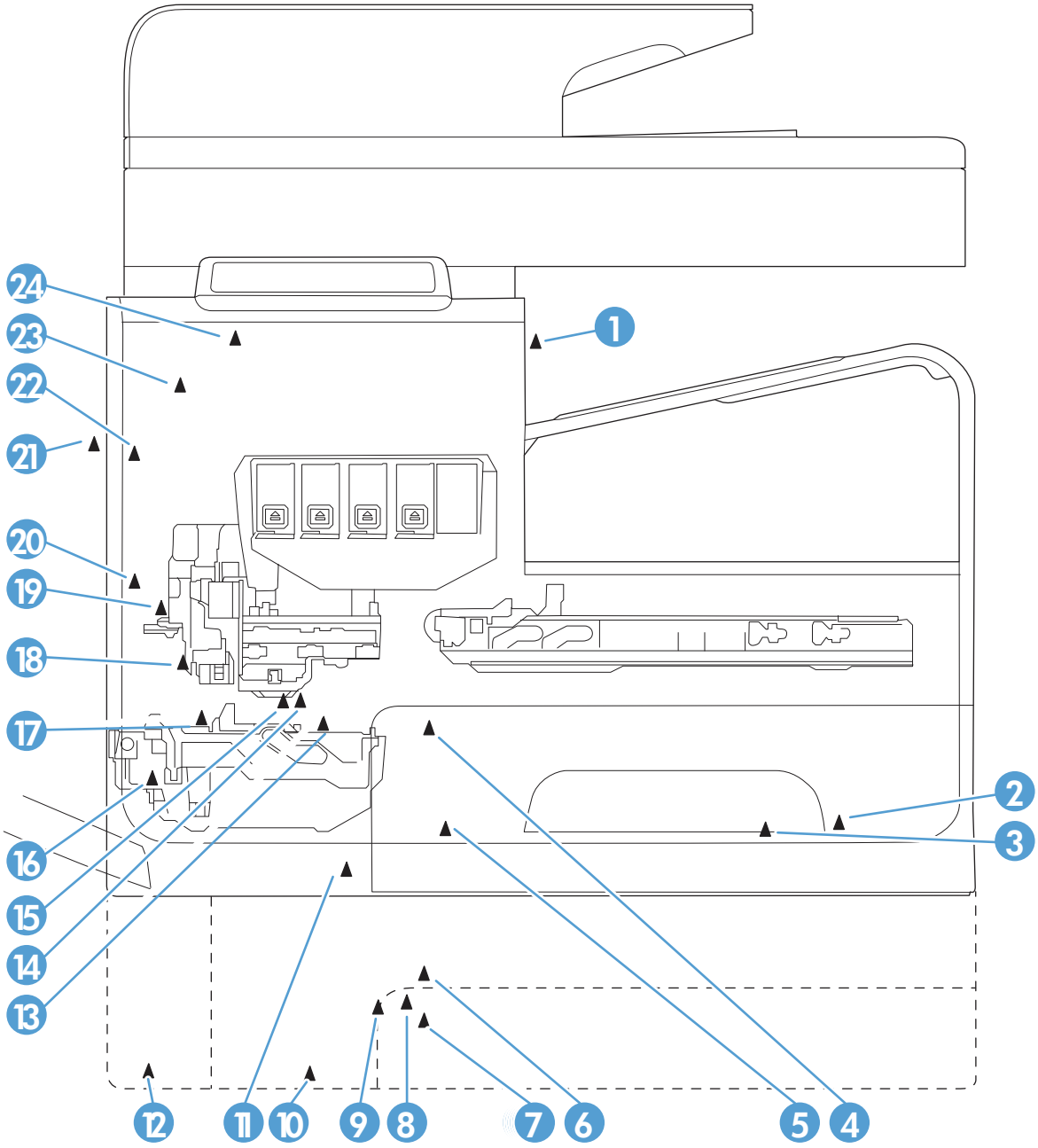

Table 1-3 **Product sensors**

Item	Description	Item	Description
1	Output flap jam sensor	13	Top of Form (TOF) REDI sensor (located on platen)
2	Ambient temperature sensor	14	Feed roller encoder
3	Ambient humidity sensor	15	Feed roller home sensor
4	Tray 2 pickup tire home sensor	16	Duplex module presence sensor
5	Tray 2 tray presence sensor	17	Print zone REDI sensor (located on platen)
6	Tray 3 pickup tire home sensor	18	Back-scatter drop detect sensor

Table 1-3 Product sensors (continued)

Item	Description	Item	Description
7	Tray 3 paper presence sensor	19	Print calibration/Media edge detect sensor
8	Tray 3 separation sensor	20	Lower paper path REDI sensor
9	Tray 2 paper presence sensor	21	Left door open sensor
10	Tray 3 tray presence sensor	22	Upper paper path REDI sensor
11	Tray 1 paper presence sensor	23	Ink supply door open sensor
12	Tray 3 cleanout presence sensor	24	Eject REDI sensor

There are several motors in the product for pick, feed, duplexing, printbar lift, delivery, and the scanning sensor carriage.

Figure 1-7 Paper-handling-system motors

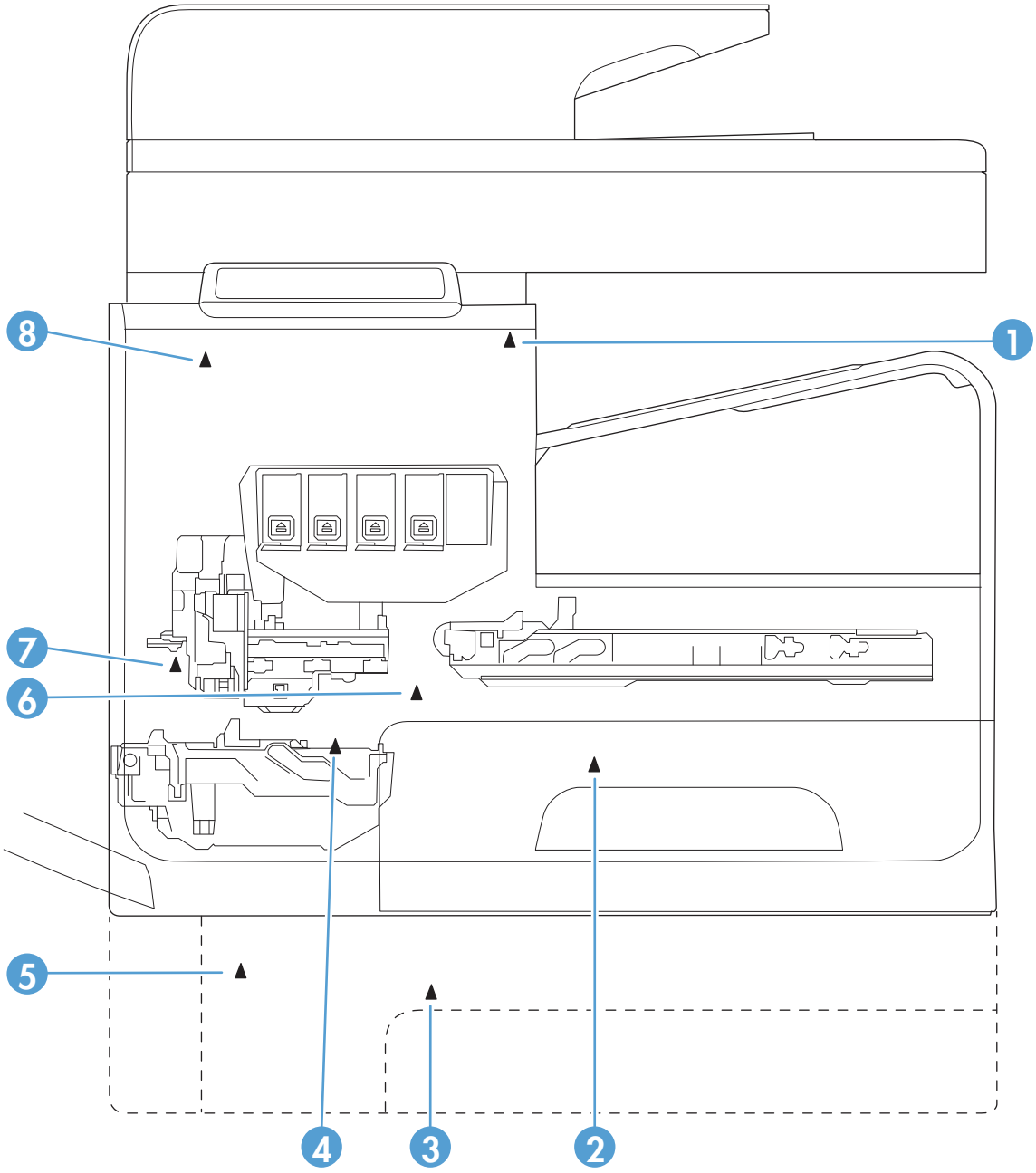

Table 1-4 **Paper-handling system motors**

Item	Description
1	Eject (or output drive) motor
2	Tray 2 pickup motor
3	Tray 3 pickup motor
4	Duplex Tray 1 motor
5	Tray 3 feed motor
6	Feed motor

Table 1-4 **Paper-handling system motors (continued)**

Item	Description
7	Optical carriage motor
8	Printbar lift motor

Input trays

The product comes standard with two input trays, and also accepts an accessory tray.

- 50-page multipurpose (MP) tray — Tray 1: The tray shares a motor with the duplex module and has only one sensor. It is a reflective (REDI) sensor that determines if media is present in the tray. The feed roller reflective REDI sensor determines if a sheet of media is successfully picked from the tray.
- 500-sheet letter/A4 size main tray — Tray 2: The tray has a pick motor, which is also moves the service sled. Similar to the accessory tray, both the main tray motor and the duplex MP tray motor will operate at the same time when picking paper from the main tray. The main tray has three sensors:
  - A hall effect sensor determines if the tray is closed.
  - A flag/opto sensor determines if there is media in the tray.
  - A flag/opto sensor determines if the pick roller is in home position.

  The feed roller jam sensor is used to determine if a sheet of media is successfully picked from the main tray.
- Optional 500-sheet legal size accessory tray — Tray 3: This optional tray has two motors, one for picking paper and one for the turn roller. This roller receives paper from the pickup roller and transfers it to the multipurpose tray ITR that is driven by the duplex module/MP tray motor. Both the accessory tray motor and the duplex module/MP tray motor will operate at the same time when picking paper out of the accessory tray.

  The accessory tray has the following sensors:
  - A hall effect sensor determines if the tray is closed.
  - A flag/opto sensor determines if there is media in the tray.
  - A flag/opto sensor determines if the pickup roller is in the home position.
  - A hall effect sensor determines if the left door is closed.
  - A separation sensor determines if the product successfully picked media.

Paper path zones

The product paper path includes the following elements:

- Deskew buckle
- Print zone
- Duplex

- Output
- Eject

Figure 1-8 Paper path zones

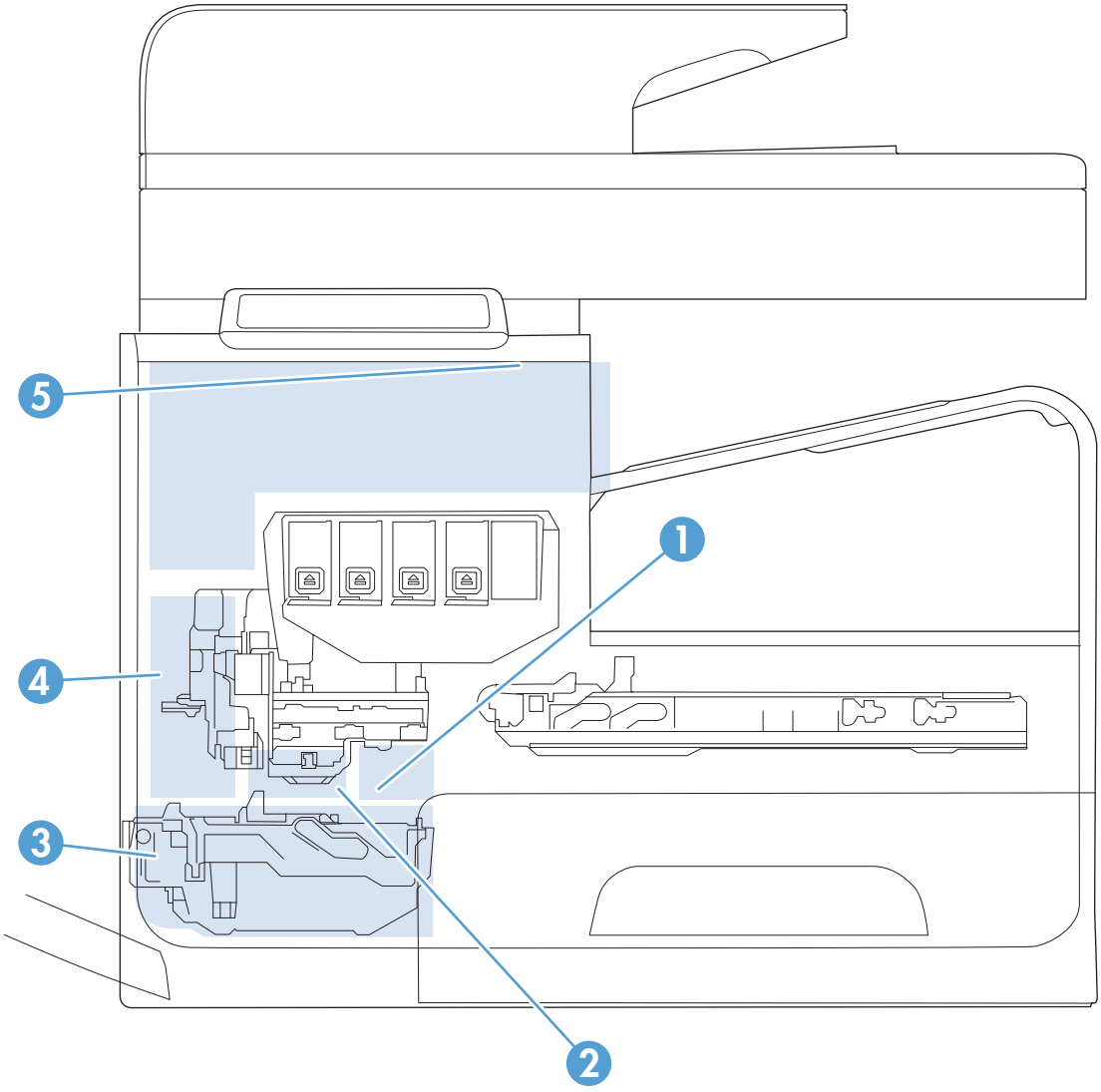

Table 1-5 Paper path zones

Item	Zone	Description
1	Deskew buckle	This is the area between the turn roller and feed roller, and all print job paper passes through this zone. During the deskew operation, the duplex module/MP tray motor rotates forward, driving the paper into the feed roller nip while the feed roller is not moving. The Top of Form (TOF) REDI sensor determines the leading edge for accurate deskew buckle size, jam detection, and if the tray successfully picked media.

Table 1-5 Paper path zones (continued)

Item	Zone	Description
2	Print zone	This is the path between the feed roller and output pinch 1 roller. The feed roller, which has an analog quadrature encoder, precisely controls the paper in the paper feed direction. In the vertical direction, a combination of the platen, feed roller, and output pinch roller 1 controls the paper. The user can rotate the platen down for jam access after removing the duplex module. There are no paper path sensors in the print zone. Therefore, if a jam occurs in the print zone, it is not detected until the leading edge of the paper is determined to be “late” in reaching the jam sensor in the output path. When a user pulls on jammed media in the print zone that is still partially in the feed roller nip, the servo control will detect a slight movement of the feed roller and assist the user by applying a forward torque to the roller. Also, the motion control system will disengage the duplex module rectifier (swing arm) so that the turn roller can spin freely. This feature reduces the pulling force needed by the user and therefore reduces the chance of leaving torn pieces of paper in the path–especially in the deskew buckle zone.
3	Duplex	By opening the left door, the duplex module can be removed to clear jams. The duplex module also serves as a maintenance ink collection unit for the print bar and will expose the user to maintenance ink when it is removed; therefore there are warnings on the module not to touch certain areas. When a user pulls on jammed media from the duplex module (or any of the trays) that is partially in the feed roller nip, the servo control will detect a slight movement of the feed roller and assist the user by applying a reverse torque to the feed roller and disengage. Also, the motion control system will disengage the duplex module rectifier so the turn roller can spin freely. This feature reduces the pulling force needed by the user and therefore reduces the chance of leaving torn pieces of paper in the path – especially in the deskew buckle zone. To determine its presence, the duplex module has a magnet that triggers a hall effect sensor mounted to the product chassis.

Table 1-5 Paper path zones (continued)

Item	Zone	Description
4	Output	The output path begins at output pinch roller 1 and continues to output pinch roller 5. There are four REDI sensors in this path that detect leading and trailing edges and jams. The feed motor drives the rollers in the output path, except output pinch roller 5. All the pinch rollers in the output and exit path are star wheels to prevent roller tracking on wet/damp ink. However, the turn roller pinch is solid and has a high amount of force for deskew buckle formation. Also, the feed motor drives all output shafts except shafts 5 and 6. The Lower paper path REDI, Upper paper path REDI, and Eject REDI sensor in the output path all track the leading and trailing edges of paper. The outer and top portions of the vertical path are formed by paper guides molded in and attached to the left door. The left door can be opened for jam clearance and has a hall effect sensor to determine if it is closed. Also when the left door is opened, drive rollers that form pinches 3 and 4 disengage from the feed motor for safety purposes.
5	Eject	The eject portion of the paper path includes the zone from output pinch roller 5 to the eject flap. The eject motor powers output pinch roller 5 and eject pinch roller 6. The eject flap has three positions: • It is closed when not printing. • It is partially open for heavy ink printing in dry environments, to limit severe curl. • It is fully open for all other printing. This position controls moderately curled media. The flap is opened and closed by a torque clutch on the eject roller shaft. The flap also has a locking feature that is controlled by a solenoid. In order for the door to open all the way, or move between positions, the solenoid must be actuated.

Servicing system

The servicing system comprises the service sled, which maintains print quality by wiping debris and ink off the print nozzles, and the service ink module, where maintenance ink is deposited.

Figure 1-9 Servicing system components

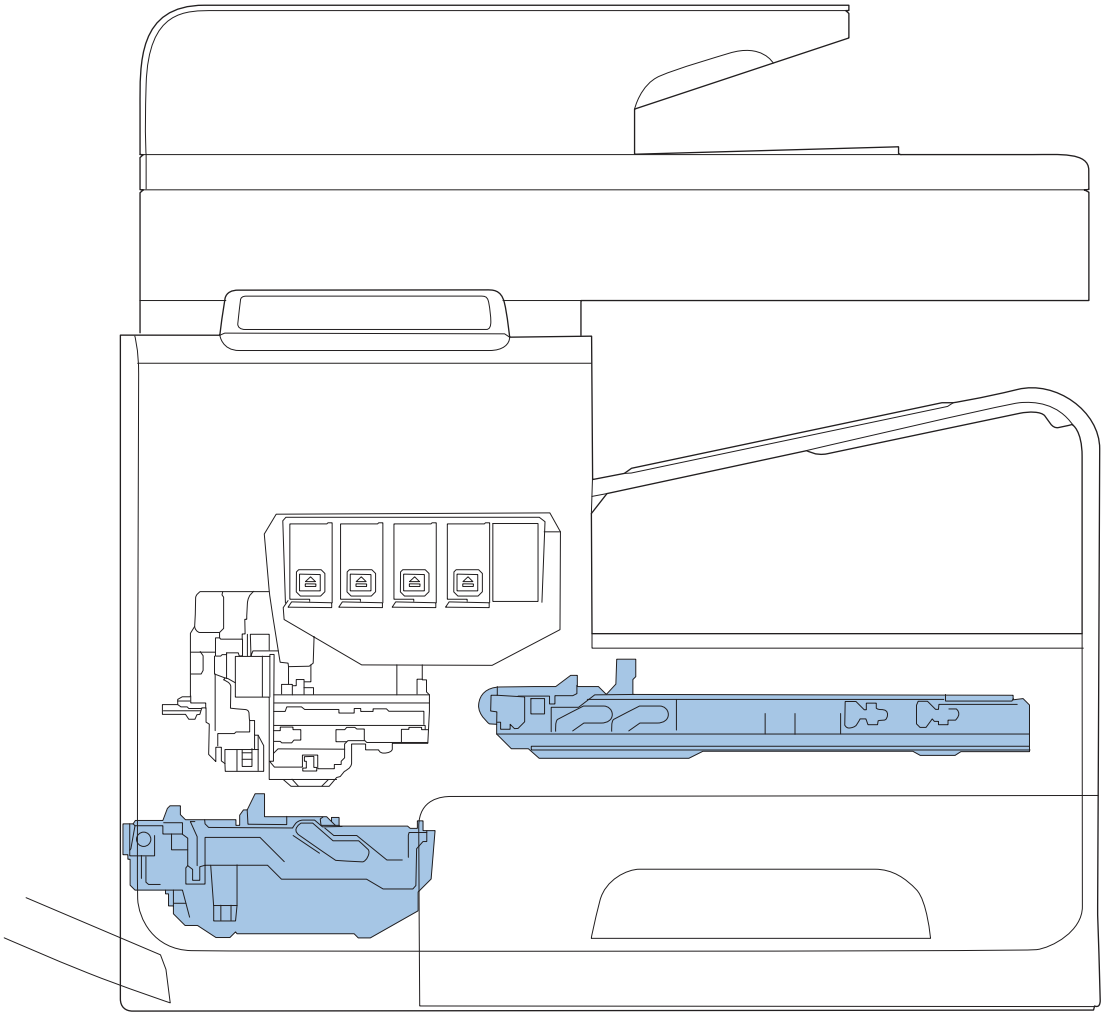

Service sled

Figure 1-10 Service sled components

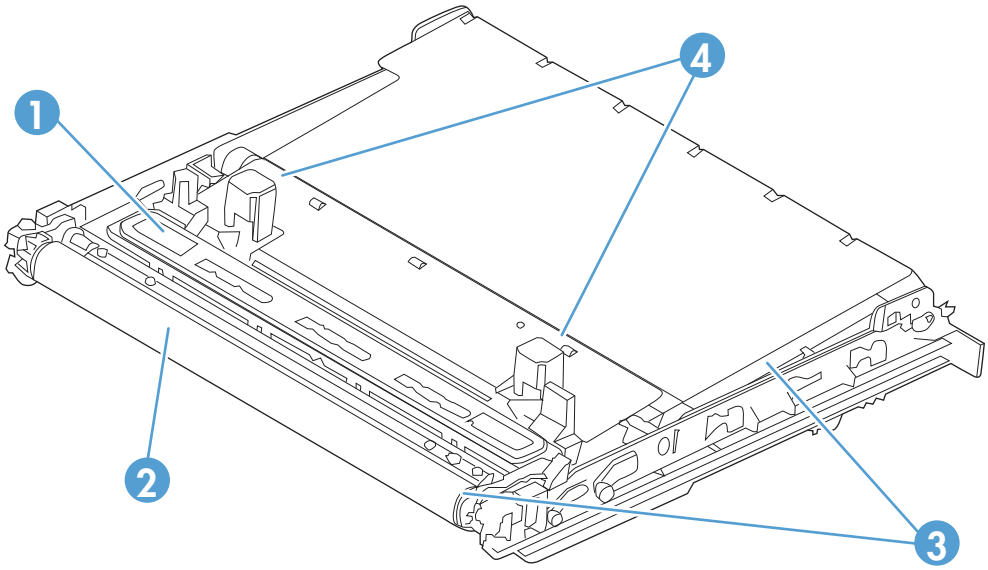

Table 1-6 Service sled components

Item	Description
1	Service sled cap
2	Service sled wiping surface
3	Service sled Web fabric loop
4	Printbar support posts

The service sled system keeps the printbar nozzles firing correctly throughout the life of the product as it performs the wiping and capping functions.

- The wiping function cleans the nozzles of ink residue and particulates.
- The capping function keeps the nozzles moist during storage when the product is idle.

The service sled system uses the pick drive system (a component of the paper path) for horizontal motion to perform its functions.

To perform the wiping function, the product moves the service sled underneath the printbar (which is elevated from the print position) so that the Web fabric makes contact with the ink nozzles. The Web fabric works in the form of a belt loop that advances after every wipe. Since the belt is a finite loop, it will eventually reuse previously used material. The Web advances when the Web wipe module moves to the right out of the print zone. The advance mechanism is triggered by a mechanism located on the rear wall of the unit.

To perform the capping function, the service sled moves underneath the printbar (which is elevated from the print position), which allows the rubber cap to seal the print nozzles from the environment.

Transmission system

The pick/service motor uses a multi-state transmission to power the following three functions:

- Move the service sled
- Pick paper from the main tray
- Lift the main tray paper stack

The transmission has the following states:

- Service sled (forward/reverse)
- Pick (forward direction)/Tray Lift (reverse direction)

Printbar movement to a specific location releases the transmission lock, and enables the pick/service motor to select the transmission state. The general location of the transmission parts is in Figure 1-11 Transmission components, rear view on page 28.

NOTE: The transmission components are behind the main PCA electronics and are difficult to access.

Figure 1-11 Transmission components, rear view

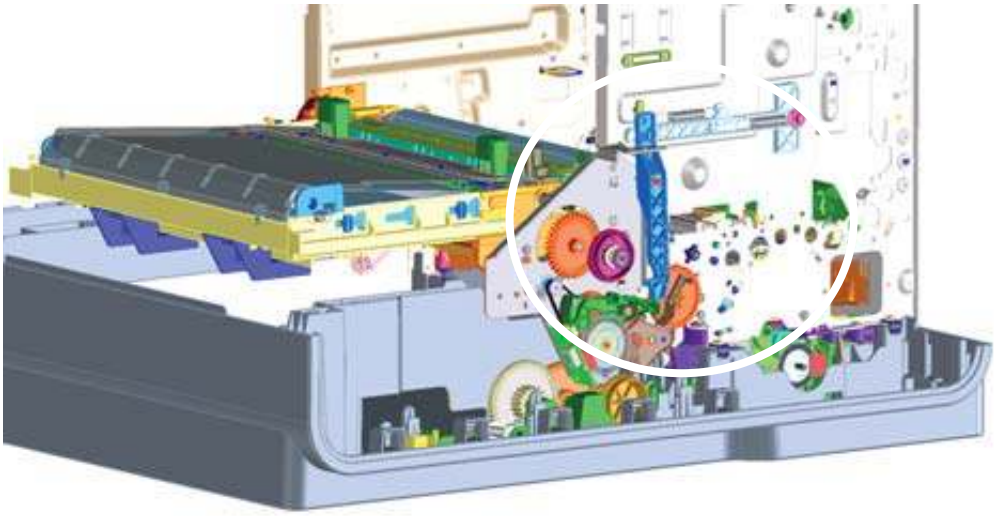

The product will not function with the transmission in the main tray pick/main tray lift state if the service station has been manually capped.

Reusing caps or pushing the caps too far onto the printbar lift guide rods while servicing the product can result in the transmission not shifting reliably.

Components

Figure 1-12 Transmission main components

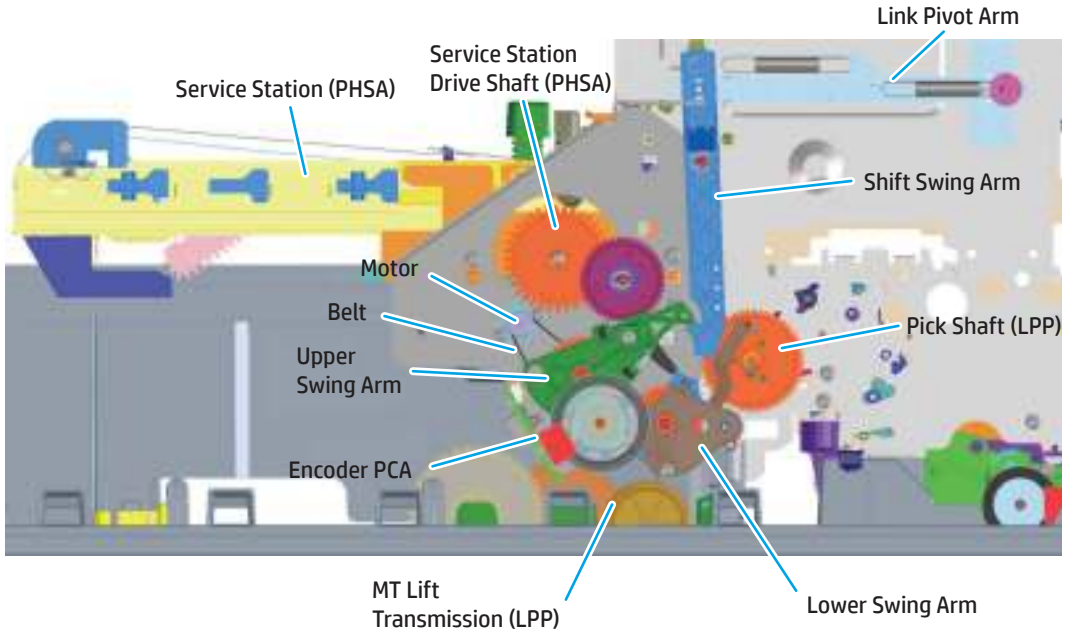

States

1. State 1–Main tray lift
   - Link pivot arm and shift swing arm in locked position
   - Upper swing arm down, engaged with lower swing arm
   - Lower swing arm down, engaged with main tray lift transmission
   - Printbar either up or down

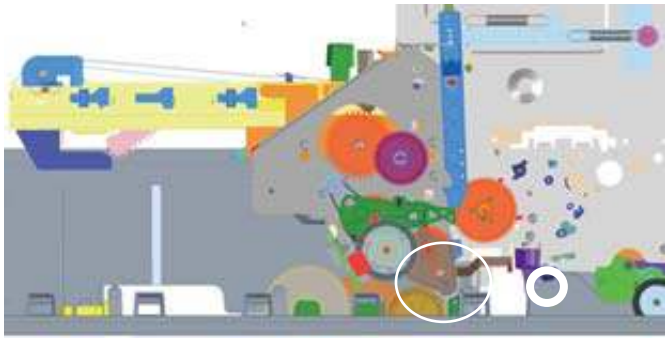

2. State 1–Main tray pick
   - Link pivot arm and shift swing arm in locked position
   - Upper swing arm down, engaged with lower swing arm
   - Lower Swing arm up, engaged with pick shaft
   - Printbar either up or down

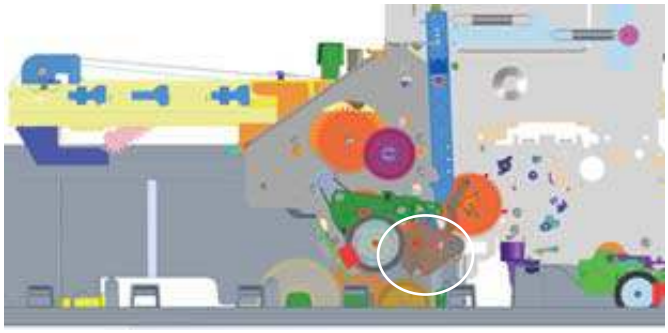

3. State 1–Mid - Switch

- Link pivot arm and shift swing arm in un-locked position
- Upper swing arm in mid switch position
- Printbar in middle position

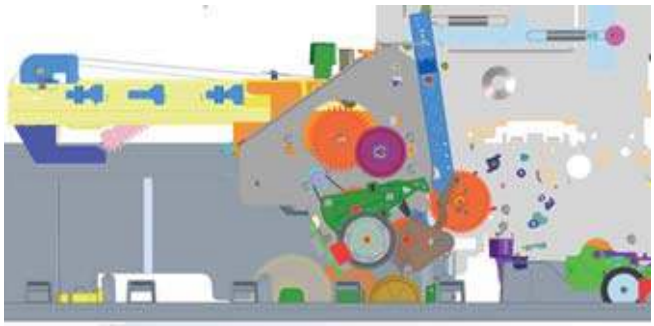

4. State 2–Service Station

- Link pivot arm and shift swing arm in locked position
- Upper swing arm up, engaged with service sled drive shaft
- Printbar either up or down

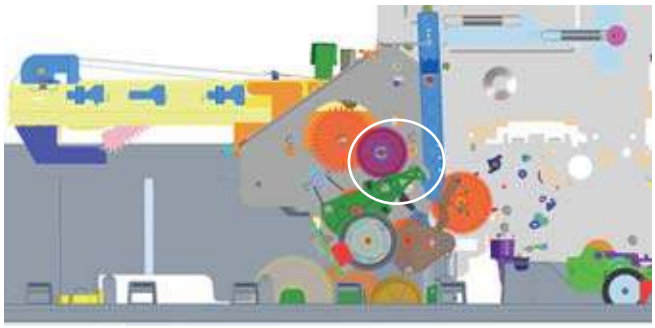

Aerosol management system

The aerosol management system consists of a fan module and filter box to keep ink aerosol from building up inside the product. The following figure shows the service ink and aerosol capture system components.

Figure 1-13 Aerosol management process

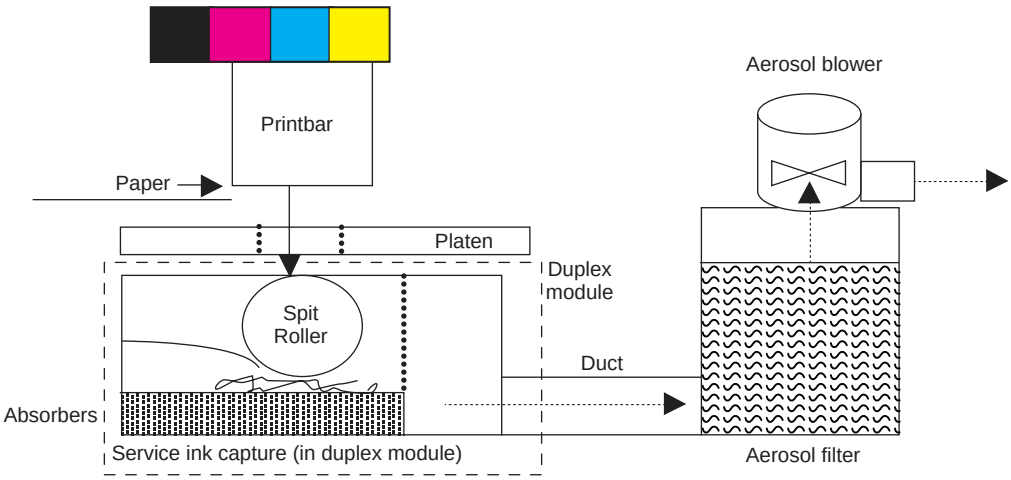

In between pages, printed aerosol is drawn though the platen openings. Service ink travels directly through the platen, impacting and collecting on the spit roller. Aerosol from the service spitting is also collected via the same system. Service ink collects in the duplex module, and a porous filter element captures the aerosol as aerosol-laden air passes though it. The aerosol blower mounted to the filter housing creates the air motion (suction—lower pressure—in the print zone).

Most of printbar servicing ink (maintenance ink) is captured by the spit roller and scraped into the bottom of the bucket on the duplex module. The service ink spit roller is indexed slowly by the motion of paper though the product, specifically driven by the swingarm and turn-roller gear train, with power provided by the duplex motor.

The product purges the printbar of its shipping fluid at initial startup, and then absorbers in the base of the duplex module collect the fluid. These absorbers allow much of the initial water to evaporate from the shipping fluid over time. Also, they allow service ink coming into contact with the absorbers to leach some of their fluids into them, assisting with drying and thickening of the sludge.

The blower remains active as long as the printbar is uncapped, and it continues to operate for a few seconds after capping is complete.

Figure 1-14 Aerosol management system components

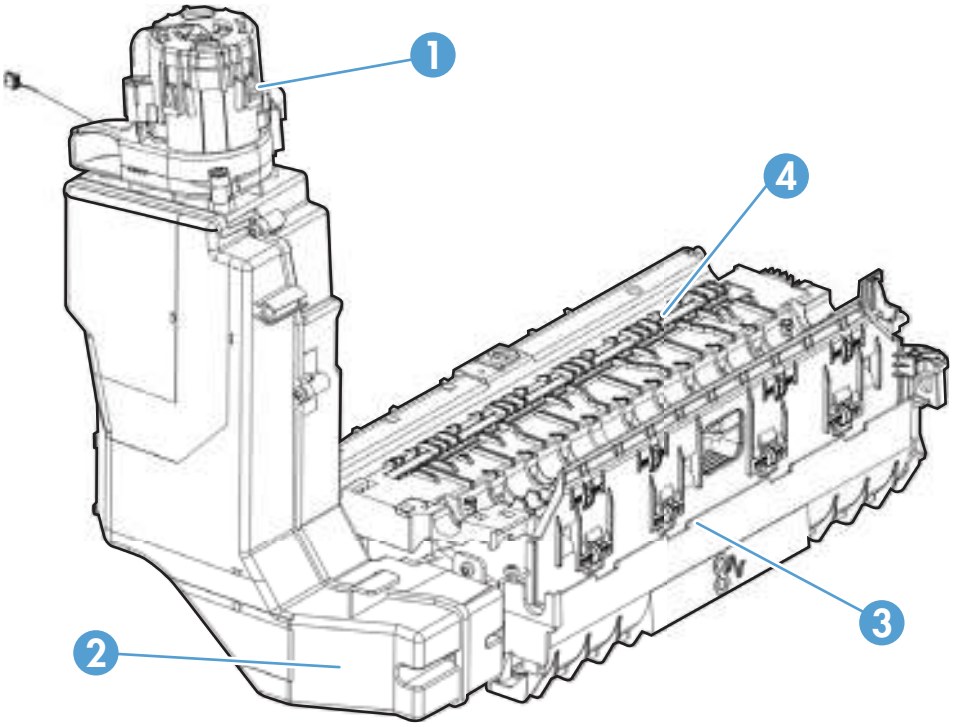

Table 1-7 **Aerosol management system components**

Item	Description
1	Blower
2	Aerosol filter housing
3	Duplex module/maintenance ink module
4	Platen

Document feeder

Document feeder operation

Standby (paper-loading) mode: In standby mode, the pickup roller is up and the stack-stop is down, preventing the user from inserting the original document too far. When a document is inserted correctly, the paper-present sensor detects its presence.

The standard operation of the document feeder consists of the pick, feed, and lift steps.

Pick: When it receives a copy or scan command, the document feeder motor engages the gear train to lower the pickup-roller assembly and raise the stack-stop. The first roller, called the pre-pick roller, moves the top few sheets forward into the document feeder. The next roller is the pickup roller. This roller contacts the document feeder separation pad, which separates multiple pages into single sheets.

Feed: The single sheet continues through the path. Along the way, the form sensor, which is a set distance from the document feeder glass, detects the sheet. This alerts the scanner to start when the page reaches the glass. The scanner acquires the image, one raster line at a time, until it detects the end of the page. The page is then ejected. The pick and feed steps are repeated as long as paper is detected in the document feeder input tray.

Duplex: When the product duplexes from the document feeder, the paper passes through the document feeder three times. During the second instance, the product reverses the page orientation and then scans it. During the third instance, the product returns the page to the original orientation.

Lift: When no more paper is detected in the document feeder input tray and the form sensor detects the trailing edge of the last page, the last sheet is ejected and the motor turns in a sequence that lifts the pick-roller assembly to standby (paper-loading) mode again.

The document feeder will not function when the document feeder cover is open. When the document feeder cover is closed, the cover-present sensor detects its presence.

The paper path is incomplete if the scanner lid/document feeder is lifted from the glass, and it will result in a paper jam error.

Document feeder paper path and sensors

The following diagram shows the document feeder paper path during a two-sided (duplexed) copy job. The paper enters the product from the document feeder input tray and passes through the paper path for the first time. The product then pulls the paper back through the path in order to reorient the page and scan the second side. The paper then travels back to the end of the paper path, where it is

pulled in one more time to travel through the paper path in order for the product to reorient the page again before sending it out of the paper path and pulling in the next sheet.

Figure 1-15 Document feeder paper path and sensors

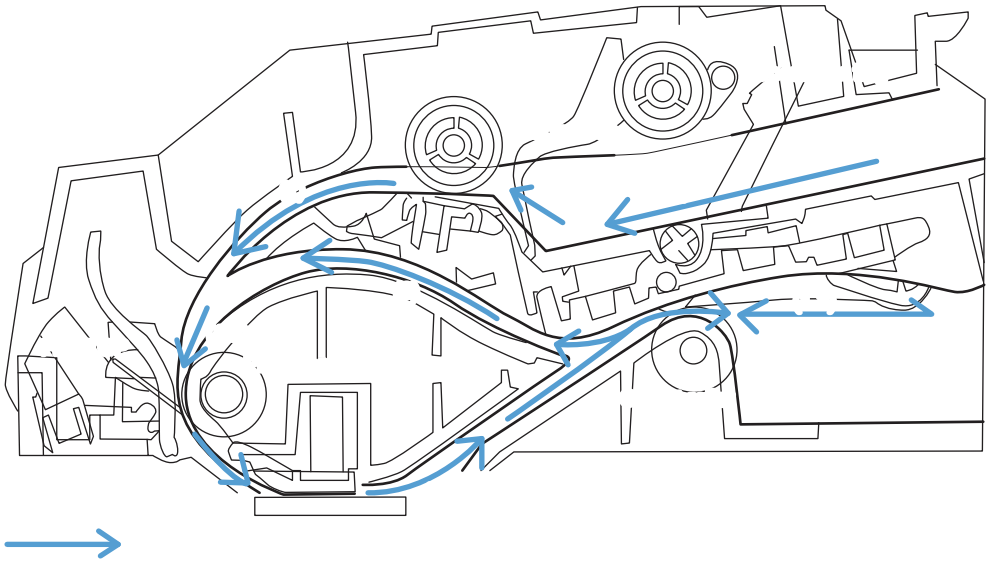

The paper-present sensor determines if paper is in the document feeder input tray. The form sensor detects the top and bottom edges of the document. One other sensor detects an open document feeder cover.

Document feeder jam detection

The document feeder has two sensors that detect paper. The paper-present sensor detects the presence of media in the document feeder input tray. The form sensor detects media moving through the document feeder. If a jam is detected, the document feeder immediately stops the paper feeding, initiates a jam clearing routine and a jam message appears on the control-panel display.

A jam can be detected under any of the following conditions:

- **Document-feeder jam**:When documents are detected in the document feeder input tray, and a command to copy, scan or fax is received, the document feeder attempts three times, or for about 10 seconds, to advance the paper to the form sensor. If the paper does not advance, the scan module turns off and the **ADF Misfeed** message appears on the control-panel display.
- **Long-document jam**: If the paper has advanced to trigger the form sensor, but the trailing edge is not detected within the time allowed for a 381 mm (15 in) document (the maximum allowable page length for the document feeder), the scan module turns off and the message **Paper Jam** appears on the control-panel display.
- **Stall jam**: When a page that is less than 381 mm (15 in) long has advanced to the form sensor but has not left it within the expected time, the paper has probably stalled or jammed. The scan module turns off and the message **Paper Jam** appears on the control-panel display.
- **Other**: If the paper stops in the document feeder and the scan module remains under the document feeder scanner glass, an internal firmware error has probably occurred and the message **Cannot Scan, Copy, or Fax** appears on the control panel display. This is usually remedied by cycling the power.

Scanner system

The flatbed image scanner captures an electronic image of the document on the glass. The scanner does this by illuminating the document with LEDs (red, green, and blue) and capturing the image in the image sensor to create an electronic format of the document. The flatbed scanner consists of three main elements

- **CIS scanner**: The CIS (contact image sensor) scanner captures an image using the product's optical path. Red, green, and blue LEDs sequentially illuminate a small strip of the document (often called a raster line), and the optical system captures each color in a single row of CCD sensors that cover the entire page width. Because only one color is captured for each line per exposure, the three colors are recombined electronically to create the full color image. For monochromatic scans or copies, all three LEDs are illuminated to create a white light for the scan so the raster line can be captured in one exposure.
- **Mechanical carriage drive**: The carriage drive moves the CIS scan head along the document length to create the image. In this product, a small DC motor with an optical encoder creates this motion. The speed of the carriage drive is proportional to the scan resolution (300 ppi is much faster than 1200 ppi) and also proportional to the type of scan (color scans are three-times slower than monochromatic scans). A 1200 ppi color scan moves so slowly that the product might appear to not be working, whereas a monochromatic copy scan moves at 50 times that speed and will be somewhat noisy.
- **Image processing system (formatter)**: The formatter processes the scanner data into either a copy or a scan to the computer. For copies, the image data is sent directly to the product without being transmitted to the computer. Depending on user selections for the copy settings, the formatter enhances the scanner data significantly before sending it to the product. Image data is captured at 300 ppi for copies and is user selectable for scans to the computer. Each pixel is represented by 8 bits for each of the three colors (256 levels for each color), for a total of 24 bits per pixel (24-bit color).

Scanner power-on sequence of events

When the product is turned on, it performs the following tests:

- **Motor test**: The product moves the motor left and right to confirm operation. It reports a scanner error 12 if no motion is detected in the motor encoder system.
- **Wall find**: The scan carriage moves slowly to the left while watching an encoder on the carriage motor to determine when the carriage has found the side wall or stop. This enables the product to identify the document origin (position of the original). If the document origin cannot be located, a default position is used instead.
- **LED check**: The product moves the carriage to the white calibration label under the left side of the flatbed image scanner, and it verifies that the minimum and maximum response is acceptable. It reports a scanner error 14 if the response is unacceptable.
- **Home find**: The scan carriage uses the optical scanner to find physical reference features that relate to the document origin at the left side of the image glass. This process ensures accurate location of the first document pixels so that the user documents will have an accurate placement

of the image on scans and copies. It reports a scanner error 6 message if the reference features are not found.

- **Calibration**: This test, also known as scanner color calibration, enables the product to identify the black and white on every pixel in the CCD. Calibration occurs in two major processes: a broad (analog) adjustment of all pixels to bring them into the target output range, and a pixel-by-pixel adjustment (digital) to fine tune the actual black and white response. The calibration process occurs under the left side of flatbed image scanner where there is a special white calibration label. The calibration code in the product firmware needs to be updated then the scanner assembly is replaced.

  Calibration is the most important step in creating a high quality image. Calibration problems can include color and brightness inaccuracies, and vertical streaks through the image. The calibration process identifies any bad pixels and enables the image formatter to recreate the lost information from adjacent pixels. Extreme cases of this problem can appear as large vertical streaks or image smears. The user has no control over the calibration process itself or this pixel-replacement process.

  For best calibration results, make sure that the scanner lid is in the down (closed) position.

Copy or scan-to-computer sequence of events

To create an accurate rendition of a document, the scanner must be calibrated for the requested operation. If the user selects a scan at 600 ppi color, the flatbed image scanner calibrates for that specific operational mode. Subsequently, the flatbed image scanner automatically re-calibrates for the next requested operation. Calibration does not occur for every new copy request.

Normal sequence of operation for a flatbed copy or scan includes:

1. LEDs illuminate.
2. Carriage motion begins moving the CIS scanner toward the right.
3. Image capture continues for the entire page or length requested in a scan-to-computer operation.
4. Carriage returns to the home position on the left.

Fax functions and operation

The following sections describe the product fax capabilities.

Computer and network security features

The product can send and receive fax data over telephone lines that conform to public switch telephone network (PSTN) standards. The secure fax protocols make it impossible for computer viruses to be transferred from the telephone line to a computer or network.

The following product features prevent virus transmission:

- No direct connection exists between the fax line and any devices that are connected to the USB or Ethernet ports.
- The internal firmware cannot be modified through the fax connection.
- All fax communications go through the fax subsystem, which does not use Internet data-exchange protocols.

PSTN operation

The PSTN operates through a central office (CO) that generates a constant voltage on the TIP and RING wires (48 V, usually). A device goes off-hook by connecting impedance (such as 600 ohms for the U.S.) across the TIP and RING so that a line current can flow. The CO can detect this current and can send impulses like dial tones. The product generates more signaling tones, such as dialing digits, to tell the CO how to connect the call. The product can also detect tones, such as a busy tone from the CO, that tell it how to behave.

When the call is finally connected, the CO behaves like a piece of wire connecting the sender and receiver. This is the period during which all of the fax signaling and data transfer occurs. When a call is completed, the circuit opens again and the line-current flow ceases, removing the CO connection from both the sender and the receiver.

On most phone systems, the TIP and RING signals appear on pins 3 and 4 of the RJ-11 modular jack (the one on the fax card, as defined in the common 6 wire RJ standard). These two signals do not have to be polarized because all of the equipment works with either TIP or RING on one pin and the other signal on the other pin. This means that cables of either polarity can interconnect and still work.

These basic functions of PSTN operation are assumed in the design of the fax subsystem. The product generates and detects the signaling tones, currents, and data signals that are required to transmit and receive faxes using the PSTN.

The fax subsystem

The formatter, fax card, firmware, and software all contribute to the fax functionality. The designs of the formatter and fax card, along with parameters in the firmware, determine the majority of the regulatory requirements for telephony on the product.

The fax subsystem is designed to support V.34 fax transmission, medium speeds (such as V.17 fax), and the lower speeds of older fax machines.

Fax card in the fax subsystem

The fax card contains the modem chipset (DSP and CODEC) that controls the basic fax functions of tone generation and detection, along with channel control for fax transmissions. The CODEC and its associated circuitry act as the third-generation silicon data access arrangement (DAA) to comply with worldwide regulatory requirements.

Safety isolation

The most important function of the fax card is the safety isolation between the high-voltage, transient-prone environment of the telephone network (TNV [telephone network voltage]) and the low-voltage analog and digital circuitry of the formatter (SELV [secondary extra-low voltage]). This safety isolation provides both customer safety and product reliability in the telecom environment.

Any signals that cross the isolation barrier do so magnetically. The breakdown voltage rating of barrier-critical components is greater than 5 kV.

Safety-protection circuitry

In addition to the safety barrier, the fax card protects against over-voltage and over-current events.

Telephone over-voltage events can be either differential mode or common mode. The event can be transient in nature (a lightning-induced surge or ESD) or continuous (a power line crossed with a phone line). The fax card protection circuitry provides margin against combinations of over-voltage and over-current events.

Common mode protection is provided by the selection of high-voltage-barrier critical components (transformer and relay). The safety barrier of the fax card PCB traces and the clearance between the fax card and surrounding components also contribute to common mode protection.

A voltage suppressor (a crowbar-type thyristor) provides differential protection. This device becomes low impedance at approximately 300 V differential, and crowbars to a low voltage.

Data path

TIP and RING are the two-wire paths for all signals from the telephone network. All signaling and data information comes across them, including fax tones and fax data.

The telephone network uses DC current to determine the hook state of the telephone, so line current must be present during a call. The silicon DAA provides a DC holding circuit to keep the line current constant during a fax call.

The silicon DAA converts the analog signal to a digital signal for DSP processing, and also converts the digital signal to an analog signal for transmitting data through a telephone line.

The magnetically coupled signals that cross the isolation barrier go through a transformer.

The DSP in the fax card communicates with the ASIC in the formatter using the high-speed serial interface.

Ring detect

Ring detect is performed by the line voltage monitoring module of the silicon DAA, and is a combination of voltage levels and cadence (time on and time off). Both must be present to detect a valid ring. The CODEC works with DSP as well as the firmware to determine if an incoming signal is an answerable ring.

Line current control

The DC current from the CO needs to have a path to flow from TIP to RING. The DC impedance emulation line modulator and DC terminations modules in the silicon DAA act as a DC holding circuit, and work with the firmware to achieve the voltage-current characteristic between TIP and RING. The impedance (the current-voltage characteristic) changes corresponding to certain special events, such as pulse dialing or when the product goes on-hook.

Fax page storage in flash memory

Fax pages are the electronic images of the document page. They can be created in any of three ways: scanned to be sent to another fax machine, generated to be sent by the computer, or received from a fax machine to be printed.

The product stores all fax pages in flash memory automatically. After these pages are written into flash memory, they are stored until the pages are sent to another fax machine, printed on the product, transmitted to the computer, or erased by the user.

These pages are stored in flash memory, which is the nonvolatile memory that can be repeatedly read from, written to, and erased. The product has 2 MB of flash memory, of which 1.5 MB is available for fax storage. The remaining 0.5 MB is used for the file system and reclamation. Adding RAM does not affect the fax page storage because the product does not use RAM for storing fax pages.

Advantages of flash memory storage

Fax pages that are stored in flash memory are persistent. They are not lost as a result of a power failure, no matter how long the power is off. Users can reprint faxes in case an ink cartridge runs out of ink or the product experiences other errors while printing faxes.

The product also has scan-ahead functionality that makes use of flash memory. Scan-ahead automatically scans pages into flash memory before a fax job is sent. This allows the sender to pick up the original document immediately after it is scanned, eliminating the need to wait until the fax transmission is complete.

Because fax pages are stored in flash memory rather than RAM, more RAM is available to handle larger and more complicated copy and print jobs.

2 Solve problems

- Restore the factory-set defaults
- Menu access
- Perform tap tests and interpret results
- Troubleshooting flowchart
- Front-panel error codes
- Control-panel messages
- Error-related symptoms
- Check symptoms

Restore the factory-set defaults

CAUTION: Restoring the factory-set defaults returns all of the product and network settings to the factory defaults, and it also clears the fax header name, phone number, and any stored faxes in the product memory. This procedure also clears the fax phone book, and deletes any pages that are stored in the memory. The procedure then automatically restarts the product.

1. On the product control panel, scroll to the Setup menu.
2. Select Tools, and then touch Restore Factory Defaults.
3. Select Yes.

   The product automatically restarts.

Menu access

These hidden engineering menus are used for testing and calibration. Some or all of them are referenced in remove and replace sections as required.

WARNING! Misuse of these menus could damage the product or make it unusable.

Figure 2-1 X476/X576 control panel button locations

Access the Engineering menu

1. Touch the Home button.
2. Touch the Back button.
3. Touch the Home button twice to enter the Engineering menu.

NOTE: The Service menu is accessed from the Engineering menu.

Access the Support Menu

Touch the Back button four times consecutively to open the Support Menu.

NOTE: The Support Menu is usually used by HP call center agents for assisting customers.

Place the product into MFG (manufacturing) mode

NOTE: These two modes are ONLY to be used by authorized service providers. They should NEVER be accessed by the end user.

1. Press and hold the power button while plugging in the product. The HP logo appears on the product control panel, and then disappears. Continue to hold the power button for five seconds after the logo disappears.
2. Release the power button.
3. Touch the Home button.
4. Touch the Back button.
5. Touch the Home button twice.
6. After a new screen appears, touch the Home button again to enter MFG (off) mode.
7. Press the power button to enter MFG (on) mode.

Place the product into Audit mode

NOTE: These two modes are ONLY to be used by authorized service providers. They should NEVER be accessed by the end user.

WARNING! Audit mode is used only when the main PCA is replaced.

NOTE: These buttons are not illuminated until they are touched with sufficient pressure. Locate these buttons by sweeping your finger over the general areas indicated in Figure 2-1 X476/X576 control panel button locations on page 42.

1. Press and hold the power button while plugging in the product. The HP logo appears on the control panel, and then disappears. Continue to hold the power button for five seconds after the logo disappears.
2. Release the power button.
3. Touch the Home button.
4. Touch the Back button
5. Touch the Home button twice.
6. Touch the button.
7. Press the power button.

NOTE: The product touchscreen is not active in this mode. Use the and buttons on the control panel frame.

Perform tap tests and interpret results

Perform a tap test

1. Open the Engineering Menu. See Access the Engineering menu on page 42.
2. Touch Manufacturing Menu.
3. Use the arrow key to find the Reports Menu, and then touch the OK button.
4. Use the arrow key to find the Print-mech tap tests, and then touch the OK button.
5. Use the arrow key to find the tap test to run.

10 tap test results (OOBE states)

The printed tap test results contain a sequence of numbers at line number 68, "Startup Complete," of the printed report.

Use the following table to interpret these numbers.

Table 2-1 10 tap test results

Column	Code	Acceptable values
Column 1	DSID_PEN_PRINTER_STARTUP_BITS	A value of 1 indicates that the printbar has been started up. This means that shipping fluid has been removed from the printbar and replaced with ink. This is the expected state for a printer after initialization.
Column 2	DSID_OOBE_STATE	255–OOBE messaging complete.
Column 3	DSID_INK_SUPPLY_OOBE_COMPELTE	1–SHF purge is complete and service wipes have been enabled.
Column 4	DSID_CAL_OOBE_STATE	A value of 2 means that the OOBE printed calibrations are complete. A value of 1 means the OOBE printed calibrations are in progress A value of 0 means the OOBE printed calibration does not exist so no printing/calibration for OOBE is attempted.
Column 5	DSID_IQ_LIST_INDEX	A value of 3 means that pen height and beam center have been completed, and that BDD is scheduled (or pending) to perform normally. **NOTE:** For 1315FR firmware and above.
Column 6	DSID_BDD_FAIL_MASK	0–internal use only.

Table 2-1 **10 tap test results (continued)**

Column	Code	Acceptable values
Column 7	DSID_IDS_FIRST_CHARGE_REQUIRED	0–internal use only.
Column 8	DSID_PRINTHEAD_CAL_NEEDED	A value of 0 indicates that OOBE calibrations (not IQ calibrations) are complete. This is so the messaging is complete for the calibrations. For example, if this value is 0, but the CAL_OOBE_STATE=1, you will get the printed OOBE calibrations, but the control panel may display **Preparing** instead of **Calibrating**.

Figure 2-2 10 tap test results

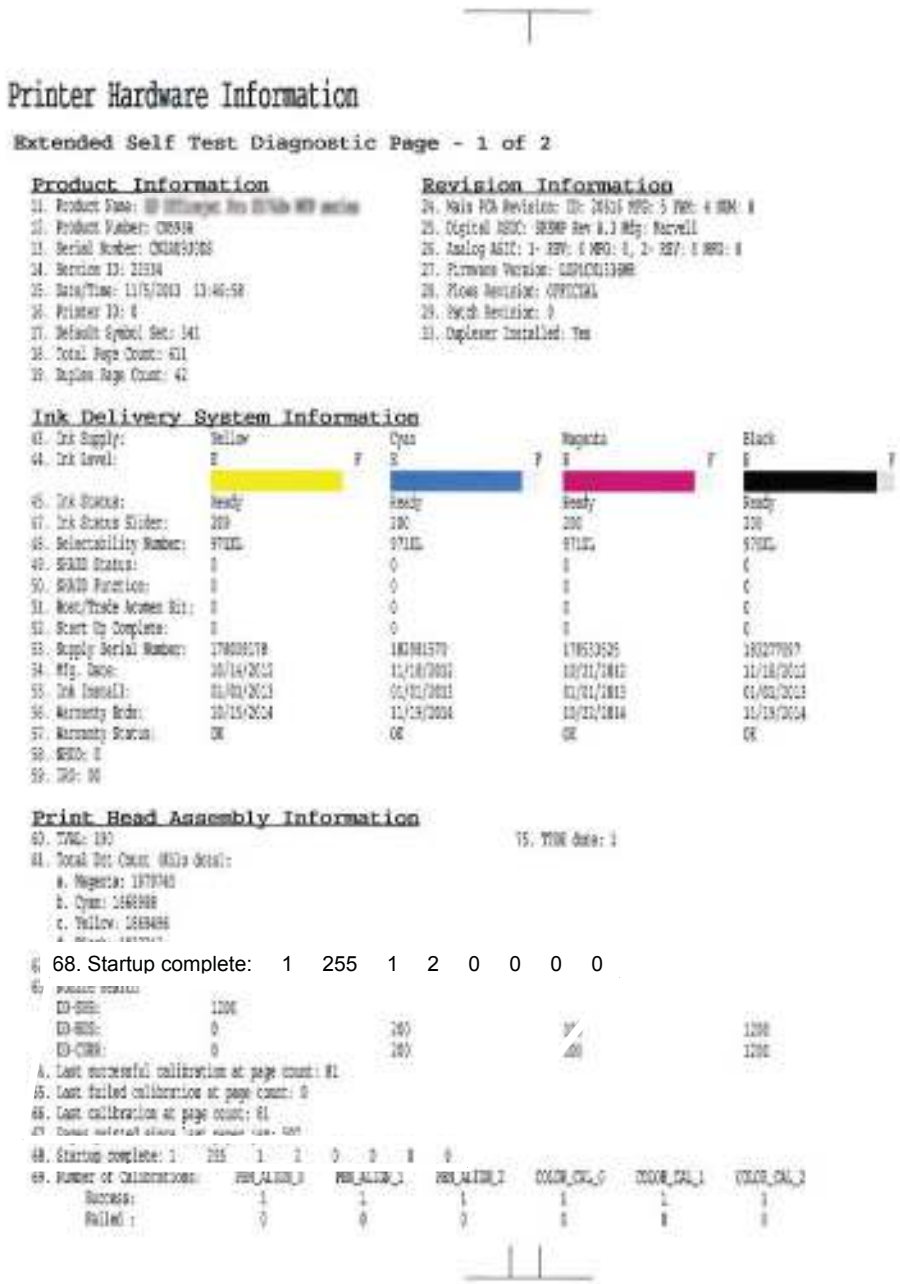

12 tap test results (REDI sensor values)

Table 2-2 12 tap test report

Callout	Report area	Item	Acceptable values
1	Print Humidity Sensor Data	Stable Relative Humidity	0–100 RH
2	Pen TSR Ambient Temperature Estimate	Pen TSR Ambient Temperature x10 °C	± 10 °C of current ambient temperature.
3	Digital Temperature Sensor Ambient Temperature	Digital Temperature Sensor Ambient Temperature x10 °C	± 10 °C of current ambient temperature.
4	Print REDI Sensor Calibration Data	TOF sensor, p value[1]	Between 10 and 100.
5	Print REDI Sensor Calibration Data	TOF sensor, m value[1]	Between 25 and 380

[1] “M” is mirror result, “P” is blocked with paper.

Figure 2-3 12 tap test report

Stable Relative Humidity: 43

----------Print TSR Ambient Temperature Estimate----------
Pen TSR Ambient Temperature x10C: 200
----------Digital Temperature Sensor Ambient Temperature---------
Digital Temperature Sensor Ambient Temperature x10 C: 266
----------Print REDI Sensor Calibration Data----------
TOF sensor, p value: 26
5 TOF sensor m value: 356

61 tap results (Align & color calibrations)

NOTE: If you hold the up or down arrows down, the tap count will start incrementing by 10, or 100

An acceptable 61 tap test has identical values for the parameters in the “Color scale (factory)” (callout 1) and “Color scale (current)” (callout 2) on the printed report areas. “Color scale (factory)” (callout 1) and “Color scale (current)” will be identical after a main PCA replacement, but may not be the same under other conditions. The values should also be identical after a printbar replacement.

Figure 2-4 61 tap test results

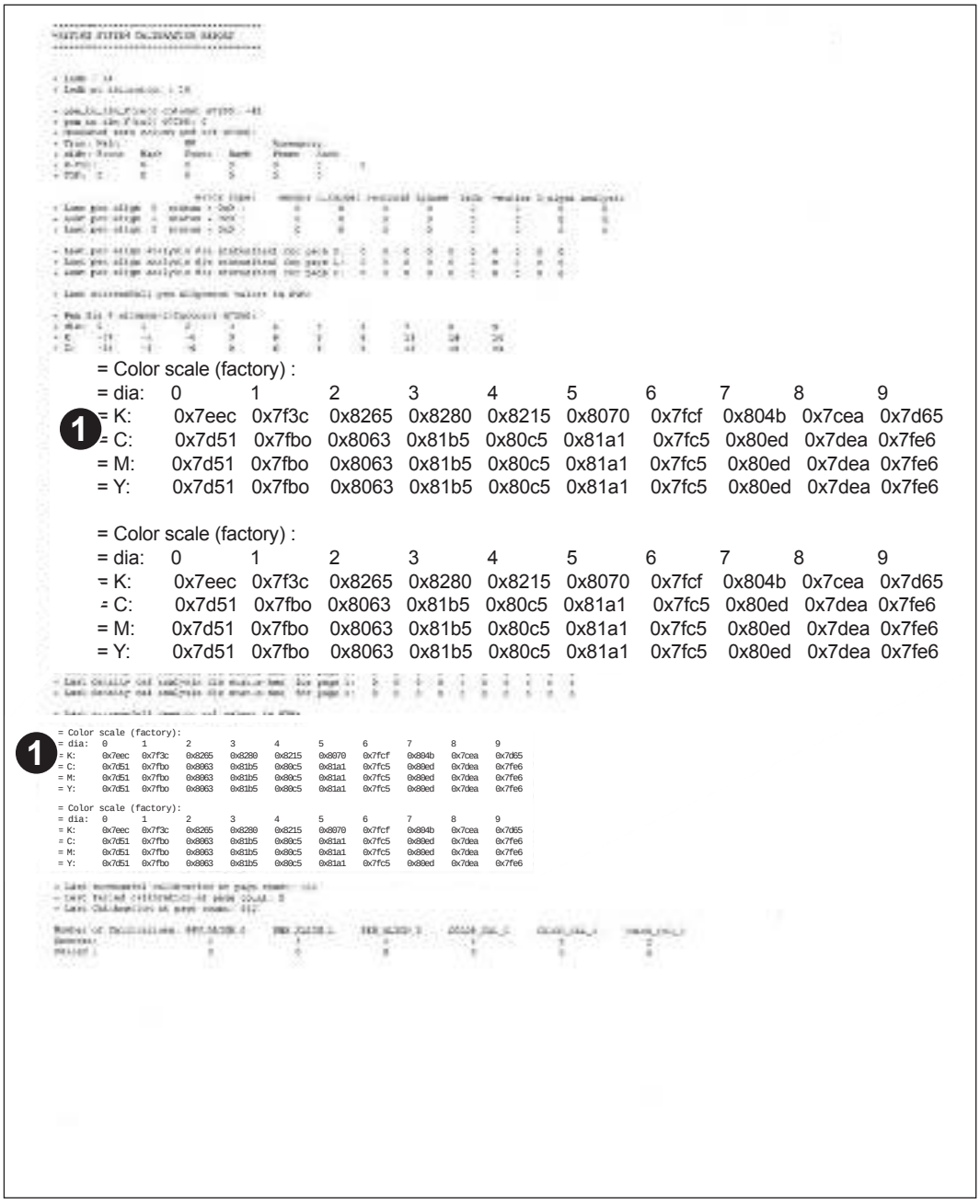

= Color scale (factory) :

= dia:	0	1	2	3	4	5	6	7	8	9
= K:	0x7eec	0x7f3c	0x8265	0x8280	0x8215	0x8070	0x7fcf	0x804b	0x7cea	0x7d65
= C:	0x7d51	0x7fbo	0x8063	0x81b5	0x80c5	0x81a1	0x7fc5	0x80ed	0x7dea	0x7fe6
= M:	0x7d51	0x7fbo	0x8063	0x81b5	0x80c5	0x81a1	0x7fc5	0x80ed	0x7dea	0x7fe6
= Y:	0x7d51	0x7fbo	0x8063	0x81b5	0x80c5	0x81a1	0x7fc5	0x80ed	0x7dea	0x7fe6

= Color scale (factory) :

= dia:	0	1	2	3	4	5	6	7	8	9
= K:	0x7eec	0x7f3c	0x8265	0x8280	0x8215	0x8070	0x7fcf	0x804b	0x7cea	0x7d65
= C:	0x7d51	0x7fbo	0x8063	0x81b5	0x80c5	0x81a1	0x7fc5	0x80ed	0x7dea	0x7fe6
= M:	0x7d51	0x7fbo	0x8063	0x81b5	0x80c5	0x81a1	0x7fc5	0x80ed	0x7dea	0x7fe6
= Y:	0x7d51	0x7fbo	0x8063	0x81b5	0x80c5	0x81a1	0x7fc5	0x80ed	0x7dea	0x7fe6

909 tap test results (BDD status)

NOTE: If you hold the up or down arrows down, the tap count will start incrementing by 10, or 100

An acceptable 909 tap test has the following values:

- BDD is operating (callout 1)
- Cal OOBE is complete state=2 (callout 2)
- Cal IQ is in progress, index=1 (callout 3)

Figure 2-5 909 tap test results

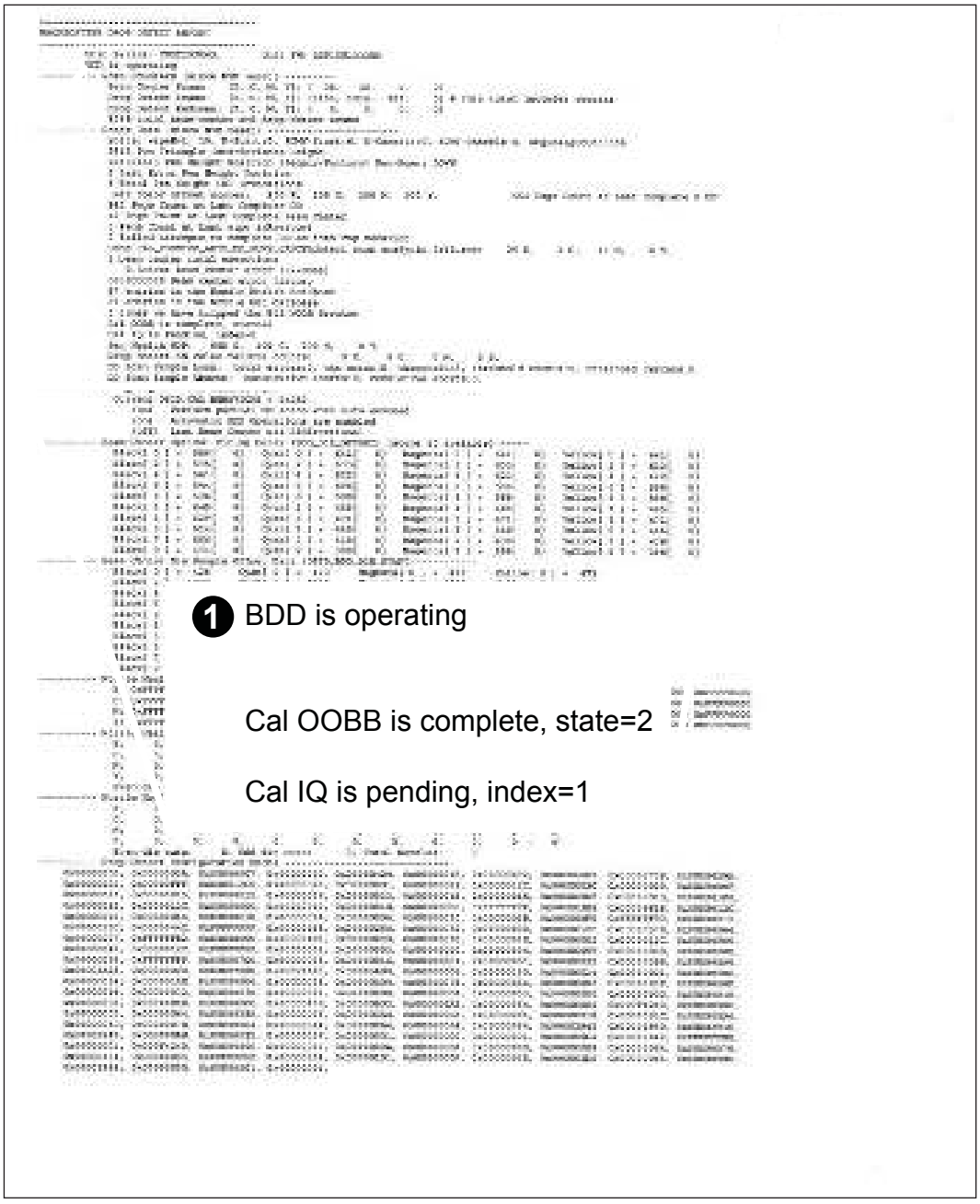

Troubleshooting flowchart

Use the troubleshooting flowchart to pinpoint the root cause of hardware malfunctions. The flowchart guides you to the section of this chapter that contains steps for correcting the malfunction.

Before beginning any troubleshooting procedure, check the following issues:

- Are supply items within their rated life?
- Does the configuration page reveal any configuration errors?

NOTE: The customer is responsible for checking supplies and for using supplies that are in good condition.

This flowchart highlights the general processes that you can follow to quickly isolate and solve product hardware problems.

Each row depicts a major troubleshooting step. A “yes” answer to a question allows you to proceed to the next major step. A “no” answer indicates that more testing is needed. Go to the appropriate section in this chapter, and follow the instructions there. After completing the instructions, go to the next major step in this troubleshooting flowchart.

Table 2-3 Troubleshooting flowchart

1 **Power and electronics**	Is the product on and does a readable message display?		Follow the power-on troubleshooting checks. After the control panel display is functional, see step 2.
	Yes ↓	No →	
2 **Control panel messages**	Does the normal operational messaging display on the control panel?		After the errors have been corrected, go to step 3.
	Yes ↓	No →	
3 **Information pages**	Open the menu and print the configuration pages to verify that all the accessories are installed. Are all the accessories installed?		If accessories that are installed are not listed on the configuration page, remove the accessory and reinstall it. After evaluating the configuration pages, see step 4.
	Yes ↓	No →	
4 **Image quality**	Does the print quality meet the customer's requirements?		Compare the images with the sample defects in Table 2-6 Print quality defect examples on page 79. After the print-quality is acceptable, see step 5.
	Yes ↓	No →	
5 **Paper handling**	Is the customer experiencing paper-handling problems?		See Solve paper handling problems on page 92. When the paper handling issues have been resolved, see step 6.
	Yes ↓	No →	

Table 2-3 Troubleshooting flowchart (continued)

6 **Interface**	Can the customer print successfully from the host computer?		Verify that all I/O cables are connected correctly and that a valid IP address is listed on the Jetdirect configuration page. If error messages display on the control panel when you try to print an event log, see Control-panel messages on page 58. When the customer can print from the host computer, this is the end of the troubleshooting process.
	Yes. This is the end of the troubleshooting process.	No →	

Front-panel error codes

The following front-panel error codes indicate the current product status or situations that might require action.

NOTE: If you encounter an error code that isn't in this list, then you will likely have to return the product for service.

Front-panel error code	Description	Remote	Onsite
0xC6FDxx02	No pen IO	Turn the product off, then on.	Ensure that the three printbar flex cables are inserted correctly in the main PCA.. If any of the printbar flex cables are damaged, replace them. Order part number CN459-60407. Replace the printbar. The main PCA could be defective (rare).
0xC6FDxx03	Incorrect pen IO		
0xC6FDxx04	Pen WDOG fault		
0xC6FDxx05			
0xC6FDxx06	Unrecognized pen type		
0xC6FDxx07	Pen LVDS error		
0xC6FDxx08	Pen ID invalid		
0xC6FDxx09	Pen ID bit flipped		
0xC6FDxx10	Pen bad DSTR		
0xC6FDxx11			
0xC6FDxx12	Pen TSR fault		
0xC6FDxx13	Pen stuck, cold		
0xC6FDxx14	Pen not heating		
0xC6FDxx15	Pen too cold		
0xC714xx20	Pen VDD short low		
0xC714xx21	Pen VDD short high		
0xC714xx22	Pen VDD expected on		
0xC714xx23	Pen VPP init short low		
0xC714xx24	Pen VPP short low		
0xC714xx25	Pen VPP short init high		
0xC714xx26	Pen VPP short high		
0xC714xx27	Pen VPP short test out of range low		
0xC714xx28	Pen VPP short test out of range high		
0xC6FDxx15	Pen too cold	Wait for the printhead to warm up. This can take up to four hours.	Replace the printbar.

Front-panel error code	Description	Remote	Onsite
6100000B	Service station pen too cold	If the room temperature if below 5C or the product was stored in an environment below 5C, allow the product to warm up. This can take up to four hours.	Replace the printbar.
6100000C	Service Station Home Failure	Turn the product off, then on.	Verify that the service sled transmission is in the correct position. Verify that the service sled assembly is installed correctly and not racked.
6100000D	Service station cap home long	Turn the product off, then on.	Check the transmission springs. Verify that the cam follower is installed. Replace the dwell gear (usually will also have 610000C8 asserts to go with ...0D) Ensure that the swingarms are engaged correctly. Ensure that the printbar is installed correctly. That it is not racked
6100000E	Service station cap home short	Turn the product off, then on.	Inspect the service sled for debris (screws, plastic tabs, etc.) blocking its path. If the carriage is blocking the service sled, inspect the path between the carriage and carriage garage for debris blocking the path. Use the test Carriage function in the support test menu to confirm correct operation of the sensor carriage. **NOTE:** The service motor assembly is not field replaceable.
61000010	Service station stall on interlock engage	Turn the product off, then on.	Ensure that the service sled can move fully from cap to Web advance position. Ensure that the service sled transmission is in the correct position. If the swingarm is in the wrong position for pick/service, that cannot be repaired during DPU.
61000011	Service sled restricted movement service error		

Front-panel error code	Description	Remote	Onsite
61000012	Lift restricted movement service error	Turn the product off, then on.	Ensure that the printbar lift is not obstructed. Ensure that the printbar lift guide assembly and guide rods are not obstructed. Verify that the service sled transmission is in the correct position. Check that the printbar is not racked. If it is, remove and reinstall the printbar. The printbar lift assembly may be defective. Replace the assembly. The sensor carriage encoder strip may be dirty or damaged.
61000013	Carriage restricted movement service error	Turn the product off, then on.	Check that the sensor carriage flex cable (J31) is connected correctly and not damaged. Check that the sensor carriage motor is connected. Ensure that the transmission is in the correct position. Verify that there is no debris blocking carriage movement. **NOTE:** The carriage movement mechanisms are not field replaceable.
61000017	Printbar transmission state error	Turn the product off, then on.	Ensure that the service sled transmission is in the correct position.
6100001E	Paper motor thermal error	Turn the product off, then on.	Check that there is no debris in the paper path or print zone that could be causing drag on the motor. The paper motor is not field replaceable.
6100001F	Duplex motor thermal error	Turn the product off, then on.	Check that there is no debris in the lower paper path (below the duplex module) that could be causing drag on the motor. Replace the duplex motor.

Front-panel error code	Description	Remote	Onsite
61000020	Output motor thermal error	Turn the product off, then on.	Check that there is no debris in the upper paper path that could be causing drag on the motor. Check that all portions of the output drive rotate freely. Replace the output drive assembly.
6100002D	Paper load tray 1 pick motor	Turn the product off, then on.	Verify that the pick tire moved. If it moved, the top of the page in the tray will move about an inch. Verify that the service/pick transmission is in the correct position. Check for a missing wavy spring in lower swing arm. **NOTE:** The Tray 1 pick tire/index sensor is not field replaceable.
6100002E	Paper load pick tire index sensor		
61000035	Printbar clutch slippage	Turn the product off, then on.	Check for any objects obstructing printbar motion. Check that there is no debris on the printbar lift guide rods. Check the printbar lift shaft. Replace it if it is defective.
6100004E	Pen startup spits already done	Turn the product off, then on.	Replace the printbar.
610000C4	Service wipe pens away from cap motor	Turn the product off, then on.	A service stall happened while wiping the pen. Check that the service sled is free to move. Check that the printbar lift is operating correctly.
610000C7	Service wipe pens toward cap motor	Turn the product off, then on.	Verify that the service sled transmission is in the correct position. Check for missing gears, retainers, and so forth. Ensure that the service sled transmission is in the correct position.
610000C8	Service move to transmission state		
610000D2	DPU service station unlimited move		
610000D3	DPU printbar crash into service station		
610000C9	Service carriage home invalid	Turn the product off, then on.	Verify that the encoder stalled against the garage wall. Check the carriage encoder for a faulty encoder strip or sensor. Use the Test Carriage function in the support test menu to confirm correct operation of the sensor carriage.

Front-panel error code	Description	Remote	Onsite
610000D4	DPU printbar under service station	Turn the product off, then on.	Check for any objectss obstructing printbar motion. Replace a stripped gear or clutch plate.
83C00024	Invalid firmware upgrade	Use the correct firmware	Use the correct firmware File. Usually caused by using firmware for a different product.
C18A000A	The spittoon level is too full during OOBE. The product may be attempting a second OOBE.	This is a very rare error condition. If this error occurs, replace the product.	If this error occurs during a printbar replacement, then replace the product.
C4EBAxxx	Internal bus error	Turn the product off, then on.	The printer firmware may be corrupted. Use the FSErase utility to reload the firmware. Call HP support for the location of the utility and instructions for use. Replace the cable between the main PCA and the scanner. Replace the scanner. Replace the main PCA.
C4E81xxx **C4E0Dxxx**	Internal bus error	Turn the product off, then on.	The printer firmware may be corrupted. Use the FSErase utility to reload the firmware. Call HP support for the location of the utility and instructions for use. Check the cable connection to the Tray 3 interface board. Replace Tray 3. Replace the main PCA.
All other **C4Exxxxx** errors			The printer firmware may be corrupted. Use the FSErase utility to reload the firmware. Call HP support for the location of the utility and instructions for use. Replace the main PCA.

Front-panel error code	Description	Remote	Onsite
C7140024	VPP power short detected	Turn the product off, then on.	Ensure that the three printbar FFCs are inserted correctly in the main PCA. If any of the printbar flex cables are damaged, replace them. Order part number CN459-60407. Replace the printbar. The main PCA could be defective (rare).
C8190012 **C8190014**		Turn the product off, then on.	Check the printbar cable and replace if it is damaged. Replace the printbar. Replace main PCA.
E8190Cxx		Turn the product off, then on.	If the duplex motor, eject motor, or eject solenoid are defective, replace them. If the sensor carriage motor is defective, return the product.
E8191Cxx		Turn the product off, then on.	If the printbar is defective, replace it. If the printbar is not defective and no other problem can be found, return the product.

Control-panel messages

WARNING! Whenever turning the product off for servicing, wait 5 seconds, and then remove the power cord before attempting to service the product. If this warning is not followed, severe injury can result, in addition to damage to the product.

Message	Description	Remote	Onsite
Non-HP ink cartridges installed	The product has detected a non-HP cartridge or cartridges.	Replace the cartridges with HP cartridges to ensure that the best print quality.	
Used or Counterfeit Cartridge Detected	The product has detected a refilled or counterfeit cartridge.	At the computer, click **Yes** or **No** to clear the message.	
Counterfeit Cartridge Advisory	The product has detected a possibly counterfeit cartridge.	At the computer, click the hypertext link to report fraud, or click the **Continue** button to clear the message.	
Used, Refilled or Counterfeit Cartridge Detected	The product has detected a possibly counterfeit cartridge.	At the computer, click the **Buy Now** button to purchase a genuine HP cartridge, or click the **OK** button to clear the message.	
Use SETUP cartridges	The product needs the setup ink cartridges that came with the product to perform the initial setup process.	Replace the cartridges with the setup ink cartridges that came with the product.	
Do not use SETUP cartridges	The setup cartridges that came with the product cannot be used after the product has been initialized.	Remove those cartridges, and then install non-setup cartridges.	

Message	Description	Remote	Onsite
Service Motor Stall		Turn the product off, then on.	• Ensure that the service sled is properly inserted. Check for rub points. • Check the printbar shims. They should not be stuck. The printbar shims are metal shims located beneath the printbar. • Check to make sure that the lead in ramps on the edge of the printbar head are present and, if not, find them. **NOTE:** The service station motor is not field replaceable. Return the product to an authorized HP service center.
Ink cartridge problem	The product has detected that a cartridge is missing or damaged.	Replace the cartridge indicated in the error message.	

Message	Description	Remote	Onsite
Empty Ink Cartridge		If the **Empty Ink Cartridge** message occurs with a new, genuine HP ink cartridge, follow these steps: 1. Turn the product off, then on. 2. Open the supply door and remove the cartridge indicated in the error message, and then close the supply door. 3. Turn the product off by pressing the power button. If the product does not power off in 60 seconds, unplug the product. 4. Turn the product back on and wait until is in the Ready state. This takes about 60 seconds. 5. Open the supply door and replace the supply that generated the error message. 6. Close the supply door.	
Startup Routine Ink Alert	The cartridge indicated might not have enough ink to complete the product startup process.	Replace the cartridge indicated in the error message.	
HP Protected Cartridge Installed	The product has detected cartridges that were locked in another product using the HP Cartridge Protection feature. Cartridges locked in another product will not work in this product.	Replace the cartridge indicated in the error message.	
Ink Sensor Failure	The product ink sensor has failed and the product no longer prints.	Turn the product off, then on.	Replace the BDD sensor.
Ink Sensor Warning	This message can occur when using a refilled ink cartridge or when the ink sensor has failed.	If this message occurs with a refilled ink cartridge and print quality is still acceptable, acknowledge the error message and continue printing.	If this message is accompanied by massive print quality issues, the ink sensor might have failed and must be replaced. Failed ink sensors cannot determine ink cartridge ink levels.

Message	Description	Remote	Onsite
Low on ink	The ink level in the indicated cartridge has reached a low level.	It is not necessary to replace the cartridge at this point. HP recommends having a replacement cartridge ready for when the cartridge is empty.	
Very low on ink	The ink level in the indicated cartridge has reached a very low level.	It is not necessary to replace the cartridge at this point. HP recommends having a replacement cartridge ready for when the cartridge is empty.	
Ink Cartridges Depleted		If the **Ink Cartridges Depleted** message occurs, follow these steps: 1. Ensure that the product is in a level operating position. 2. Perform a 24–tap test. This tap test performs a printbar prime. No report is printed. 3. If a high-volume print job has just completed, and the ink cartridge is near end of life, wait 8 hours to see if the error goes away. 4. Replace the ink cartridge.	
Problem with SETUP cartridges	The product has detected a problem with the setup cartridges, which prevents the product from completing the initialization process during initial installation.	Replace the cartridges.	
Problem with Printer Preparation	The **Problem with Printer Preparation message** can occur due to the following conditions: • The product clock has failed and ink preparation might not be complete. • The Estimated Ink Level gauge might be inaccurate.	1. Open and close the ink cartridge door. 2. Turn the product off, then on.	

Message	Description	Remote	Onsite
Preparing printer...	The **Preparing printer...** message can occur frequently, for example with every other printed page.	If this message occurs with a nearly empty ink cartridge, either replace the ink cartridge or let the ink cartridge rest for eight hours before resuming printing. If this message occurs with a full ink cartridge, or an ink cartridge more than 80% full, try replacing the ink cartridge.	
Paper Jam <Location>	The product has experienced a paper jam. Printing cannot continue until the jam has been cleared.	Follow the instructions on the product control panel to clear the jam, or see Resolve paper jam issues on page 99	See Clear jams on page 99.
Paper too short	The product cannot print on paper smaller than 12.5 cm (4.9 in) in length.	Load paper that exceeds the product minimum supported size and re-send the print job.	
Main Tray 2 Missing or Open	The product cannot detect the tray.	If customer experiences this error, even though Tray 2 is fully inserted, perform the following: 1. Remove Tray 2. 2. Inspect the rear-left guide arm. There should be a magnet (silver piece) at the end. If this is missing, replace the tray.	Rarely, the hall effect sensor on the main PCA might be defective. Replace the main PCA if it is defective.

Message	Description	Remote	Onsite
Service Ink Capacity Warning	The maintenance ink container on the duplex module is full or almost full. This can cause print quality issues (smearing). Replace the duplex module, and then reset the service ink detection mechanism.	Replace the duplex module. 1. Open the Support Menu by pressing the Back button four times. 2. Scroll to System Configuration Menu, and then touch the OK button. 3. Scroll to Service ink container Or Duplex module, and then touch the OK button. 4. Scroll to Replace duplex module, and then touch the OK button. 5. Follow the onscreen instructions to complete the process.	Replace the service ink container, part number CN598-67004.
Automatic Document Feeder cover open	The document feeder cover is open.	Close the document feeder cover.	
Paper Jam in Automatic Document Feeder	The product has detected a jam in the document feeder.	Clear the jam and then touch the OK button. See Clear jams from the document feeder on page 100.	
Accessory Tray 3 Missing or Open	The product cannot detect the tray.	Install and close tray 3.	Replace tray 3 Check the tray three interconnect (J55).
Add Paper to Multi-Purpose Tray	The product cannot detect paper in Tray 1.	Load more paper into the tray, and then touch the OK button.	
ADF Misfeed	The product has detected a failure to feed paper through the document feeder.	Reload the paper and try the job again. If the error persists, clean the document feeder pickup and feed rollers.	
Ink cartridge failure	The product has detected damage to one or more ink cartridges.	Replace the ink cartridge or cartridges indicated in the error message.	
Printer Supply Upgrade	The product has detected an upgrade cartridge.	Press the OK button or touch the Upgrade button to install the upgrade cartridge, or replace the cartridge.	

Message	Description	Remote	Onsite
Printer Supply Upgrade Problem	A supply upgrade failed.	Replace the ink cartridges.	
Previously used genuine HP cartridges installed	The product has detected a used cartridge or cartridges.	Press or touch the OK button to clear the message.	
Duplex Module Missing	The product cannot detect the duplex module.	Install the duplex module. If this does not solve the problem, install a new duplex module. **NOTE:** If you replace the duplex module, you will need to reset the counters. 1. Open the Support Menu by pressing the Back button four times. 2. Scroll to System Configuration Menu, and then touch the OK button. 3. Scroll to Service ink container Or Duplex module, and then touch the OK button. 4. Scroll to Replace duplex module, and then touch the OK button. 5. Follow the onscreen instructions to complete the process.	If replacing the duplex module does not solve the problem, then the duplex sensor PCA may be defective. In rare cases, the power button assembly may be defective.
Close Left Door	The product has detected that the left door is open.	Close the left door.	Replace the left door. Replace the front distribution board PCA.
Close Ink Access Door	The product has detected that the ink cartridge door is open.	Close the ink access door. If the ink access door is broken, replace the front cover.	Replace the front distribution PCA.
Clear Output Area	The product has detected a jam in the output area.	Remove any paper from the output flap area. Make sure that the flap can open and close. If it cannot, replace the output flap. See Clear jams in the output bin on page 109.	If the output flap is operating correctly, then the output flap sensor may be defective.

Message	Description	Remote	Onsite
Tray 2 Out of Paper	The product cannot detect paper in the tray.	Load more paper into the tray, and then touch the OK button.	See Solve paper handling problems on page 92
Tray 3 Out of Paper	The product cannot detect paper in the tray.	Load more paper into the tray, and then touch the OK button. Replace tray 3	
Tray 3 Door Open	The product has detected that the jam access door on the right side of accessory Tray 3 is open or shut incorrectly.	Close the door. Replace tray 3	
Paper type mismatch	The paper type detected by the product does not match the type selected in the software.	Select the correct type in the software, load the type dictated by the software, or touch the OK button to continue the job with the size mismatch. See Use the correct print settings on page 74.	
Paper type mismatch	The paper size detected by the product does not match the size selected in the software.	Select the correct size in the software, load the size dictated by the software, or touch the OK button to continue the job with the size mismatch. See Use the correct print settings on page 74.	
Paper too short to auto-duplex	The paper in the product does not meet the minimum size requirements for automatic two-sided printing (duplexing).	Load paper that meets specifications for automatic duplexing. See Use HP ColorLok Paper on page 73	

Error-related symptoms

Symptom	Remote solution	Onsite solution
The product does not pick up paper	The product does not pick up paper from the input tray. See The product does not pick up paper on page 93.	See The product does not pick up paper on page 93.
The product picks up multiple sheets of paper at once	See The product picks up multiple sheets of paper on page 93.	See The product picks up multiple sheets of paper on page 93.
Product states that the tray is empty, even though it has paper	See The product states that a paper tray is empty, even though it has paper on page 94.	See The product states that a paper tray is empty, even though it has paper on page 94.
Paper jam in Tray 2	See Clear jams in Tray 2 on page 105.	See Clear jams in Tray 2 on page 105.
Print zone jam	See Print zone jams on page 96.	See Print zone jams on page 96.
Generic paper jam error	See Resolve paper jam issues on page 99.	See General paper jams issues (onsite solutions) on page 95.
Clear output tray error	See Clear jams in the output bin on page 109.	See Output tray jam errors (onsite solutions) on page 95.
Output motor stall	See Output motor stall on page 97.	See Output motor stall on page 97.
Output flap won't retract (no obstacle to prevent it)	See Output flap won't retract - no obstacle to prevent it on page 97.	See Output flap won't retract - no obstacle to prevent it on page 97.
Paper jams continuously	Paper continues to jam after jam is cleared. See Frequent jams in the paper path (onsite solutions) on page 96.	See Frequent jams in the paper path (onsite solutions) on page 96.

Check symptoms

Power and electronics

If a printer status page can be printed, see Solve product connectivity problems on page 113. If the product's power does not come on, or a printer status page cannot be printed, use the following steps to troubleshoot:

Verify that the product power is on

1. Make sure that the product is plugged in and turned on and the cables are all connected correctly. The power button should be lit with a green light. If it is not, press the power button. It should first glow with an amber color, and then change to green once it is ready. If the power button does not light up, check the following conditions:
   - Make sure that the power cable is connected to the product and the outlet.
   - Check the power source by connecting the power cable to a different outlet.
   - If the power button is still not lit with an amber light when the power button is pressed, then the power supply is likely faulty. Replace the power supply.

     NOTE: In rare cases, this symptom can also be caused by a faulty main PCA.
2. If the amber light does come on, then the power supply is operating correctly. After pushing the power button, if the green power light does not glow, check the following:
   - There are two green LEDs on the main PCA that flash slowly when the processors are operating correctly. If these LEDs are not flashing slowly, then the main PCA is probably faulty.
   - In rare cases, the power button assembly might be defective.
3. If the product motors do not rotate, make sure that the ink cartridges are installed and that the doors are all closed. The control panel displays messages to indicate these problems.
4. If the product powers up, but the front panel does not work, check the following:
   - Try printing a document. If the product can print, then the control panel or control-panel FFC might be defective.
   - If the product doesn’t print, then the main PCA might be defective.

Test the control panel

1. Open the Engineering menu. See Access the Engineering menu on page 42 for information accessing the Engineering menu.
2. Select the Service menu.
3. Select Service tests.

4. Run the following tests:
   - Test Keys
   - Test LEDs
   - Test Display
5. If any of these tests fail, or if the control-panel FFC is damaged, replace the control panel.

Check the network connections

1. Check the light next to the network connection on the product. If the network is active, the light is green.
2. Make sure that you are using a network cable and not a phone cord to connect to the network.
3. Make sure that the network router, hub, or switch is turned on and that it is working correctly.
4. Verify the port settings:
   a. From the list of products on your computer, right-click the name of this product, click **Properties**, and click the **Ports** tab.
   b. If you are using a network cable to connect to the network, make sure that the product name listed on the **Ports** tab matches the product name on the product configuration page.
   c. If you are using a USB cable and are connecting to a wireless network, make sure that the box is checked next to **Virtual printer port for USB**.
5. If you are using a personal firewall system on the computer, it might be blocking communication with the product. Try temporarily disabling the firewall to see if it is the source of the problem.
6. If your computer or the product is connected to a wireless network, low signal quality or interference might be delaying print jobs.

The product prints slowly

If the product prints but it seems slow, try the following solutions:

1. Make sure that the computer meets the minimum specifications for this product. For a list of specifications, go to this Web site: www.hp.com/support.
2. If the paper type setting is not correct for the type of paper you are using, change the setting to the correct paper type.
3. If your computer or the product is connected to a wireless network, low signal quality or interference might be delaying print jobs.
4. If the product is in an environment that experiences high humidity, low temperatures, or both conditions, the print speed might be affected.

Solve print quality problems

You can prevent most print-quality problems by following these guidelines.

- Print quality troubleshooting flowchart
- Use genuine HP cartridges
- Use HP ColorLok Paper
- Use the correct print settings
- Diagnose print quality problems using the Print Quality Page
- Solve print quality issues
- Inspect the ink cartridge for damage
- Improve print quality for copies
- Service technician notes

Print quality troubleshooting flowchart

Table 2-4 Print quality troubleshooting flowchart

1 **Are genuine HP cartridges being used?**	Genuine HP cartridges must be used for best results.		Replace any non-HP cartridges. See Use genuine HP cartridges on page 70 for more information.
	Yes ↓	No →	
2 **Is HP ColorLok paper being used?**	HP ColorLok paper must be used for best results		Replace non-HP ColorLok paper. See Use HP ColorLok Paper on page 73.
	Yes ↓	No →	
3 **Are the print settings correct?**	The print settings must be set correctly for the paper type being used.		Correct the print settings. See Use the correct print settings on page 74.
	Yes ↓	No →	
4 **Print a Print Quality Page**	The print quality page can help identify causes of print quality problems.		See Diagnose print quality problems using the Print Quality Page on page 78.

Use genuine HP cartridges

CAUTION: The use of non-HP ink cartridges might damage the product printhead.

HP recommends that you use genuine HP cartridges. HP cannot guarantee the quality or reliability of non-HP cartridges or refilled HP cartridges. If you are not using genuine HP cartridges, the following solutions might not resolve your print quality issue.

Determine if you are using genuine HP cartridges

Use the HP embedded Web server (EWS) to view the ink cartridge information

1. Open the product's EWS, click on the **Tools** tab, and then select **Ink Gauge**.
2. In the **Installed Cartridges** area, genuine HP ink usage is indicated by the following:
   - In the **Part Number** row, the ink cartridge part numbers begin with the letters “HP”.
   - The **Type** row contains an HP logo.
   - The **HP** row has the value “0” or “00”.

     NOTE: A value of “1” in the **Use** row indicates non-HP ink usage.

Use the printer status report to view the ink cartridge information

1. Print a printer status report.

2. Genuine HP ink usage is indicated by the following:

   - Line 44 Use: the value for this line should be 0. A value of 1 indicates that a non HP supply is installed. This field is reset with each supply change.
   - Line 45 HP: the value for this line should be 1. A value of 1 indicates that an HP supply is installed. A value of 0 indicates that a non-HP supply is installed. This field is reset with each supply change.

- Line 48 NHIO: the value for this field should be 0 or 00. If the value for this item is not 0 or 00, then a non-HP ink cartridge has been installed in the product but not necessarily used. This field is persistent, and not reset.
- Line 49 IRO: the value for this field should be 0 or 00. If the value for this item is not 0 or 00, then a, non-HP ink cartridge has been installed in the product and the user confirmed the message to use the non-HP ink. This field is persistent, and not reset.

Figure 2-6 Printer status report–determining genuine HP ink usage

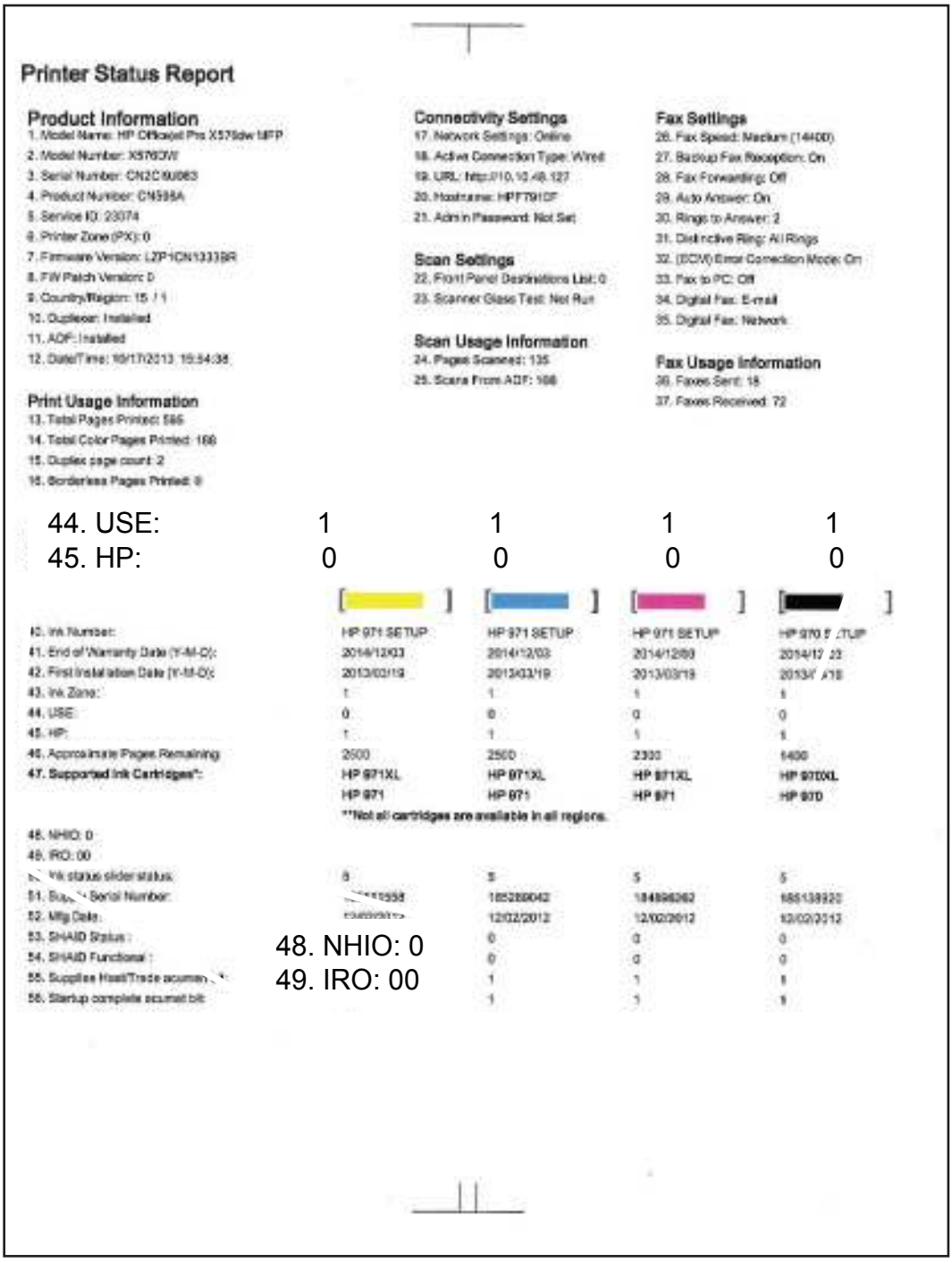

Use HP ColorLok Paper

Based on HP internal testing using a range of plain papers, HP highly recommends using papers with the ColorLok® logo for this product. For details, go to http://www.hp.com/go/printpermanence.

If HP ColorLok paper is unavailable, see Use paper that meets HP specifications on page 74

Use paper that meets HP specifications

Use different paper if you are having any of the following problems:

- The printing is too light or seems faded in areas.
- Specks of ink are on the printed pages.
- Ink is smearing on the printed pages.
- Printed characters seem misformed.
- Printed pages are curled.

Always use a paper type and weight that this product supports. In addition, follow these guidelines when selecting paper:

- Use paper that is of good quality and free of cuts, nicks, tears, spots, loose particles, dust, wrinkles, voids, staples, and curled or bent edges.
- Use paper that has not been previously printed on.
- Use paper that is designed for use in inkjet products.
- Use paper that is not too rough. Using smoother paper generally results in better print quality.

Use the correct print settings

Use the correct paper type setting in the print driver

Check the paper type setting if you are having any of the following problems:

- Ink is smearing on the printed pages.
- Repeated marks occur on the printed pages.
- Printed pages are curled.
- Printed pages have small unprinted areas.

Change the paper type and size setting for Windows

1. From a software program that has the **Print** feature available, click on the **File** menu, and then click **Print**.
2. Select the product, and then click the **Properties** or **Preferences** button.
3. Click the **Paper/Quality** tab.
4. From the **Paper type** drop-down list, click the **More...** option.
5. Expand the list of **Type is:** options.
6. Expand each category of paper types until you find the paper type that you are using.
7. Select the option for the type of paper you are using, and click the **OK** button.

Change the paper type and size setting for Mac

1. On the menu in the software program, click the **File** option.
2. Select a size from the **Paper Size** drop-down list.
3. Open the **Paper/Quality** menu.
4. Select a type from the **Media Type** drop-down list.
5. Click the **Print** button.

Adjust color

Manage color by changing the settings on the **Color** tab (Windows) and **Color Options** tab (Mac) in the print driver.

If the customer is using the correct print settings, and good quality paper, check the environmental conditions. If the product is in a location that is very cold, or humid, there might be a failure in the temperature/humidity sensor. If the customer is not happy with the following solution, then check the sensors, and replace if necessary. The sensors status is displayed on the 12 tap test page. See 12 tap test results (REDI sensor values) on page 46.

NOTE: The **HP EasyColor** check box appears only in the PCL6 print driver. It is not available in the universal print drivers.

Change the color theme for a print job

1. On the **File** menu in the software program, click **Print**.
2. Click **Properties** or **Preferences** (Windows).
3. Click the **Color** tab (Windows) or **Color Options** tab (Mac) and uncheck HP EasyColor.
4. Select a color theme from the **Color Themes** (Windows) or **RGB Color** (Mac) drop-down list.

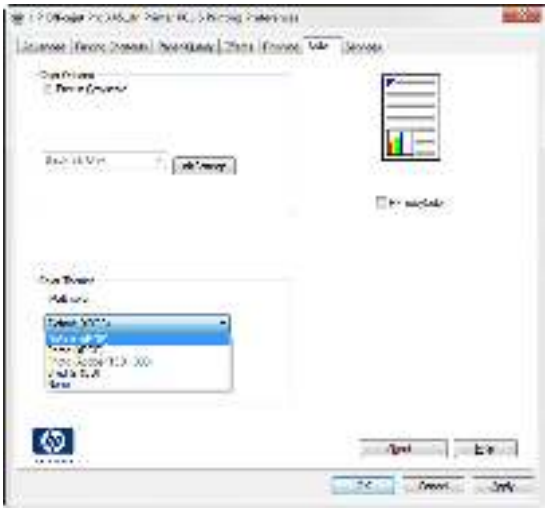

- **Default (sRGB)**: This theme sets the product to print RGB data in raw device mode. When using this theme, manage color in the software program or in the operating system for correct rendering.
- **Vivid**: The product increases the color saturation in the midtones. Use this theme when printing business graphics.
- **Photo**: The product interprets RGB color as if it were printed as a photograph using a digital mini lab. The product renders deeper, more saturated colors differently than with the Default (sRBG) theme. Use this theme when printing photos.
- **Photo (Adobe RGB 1998)**: Use this theme with printing digital photos that use the AdobeRGB color space rather than sRGB. Turn off color management in the software program when using this theme.
- **None**: No color theme is used.

Change print settings for wet, over-saturated, or ragged edge print output

The method can only be used in the PCL6 print driver.

NOTE: The need to use this functionality should be rare. Be sure to check the following first:

That the customer is using good quality paper with the correct settings. This is by far the largest cause of this symptom.

Determine if the printer operating in a cold or humid environment.

If the printer is operating in extreme environmental conditions, check the temperature and humidity sensors. The current values can be found in the 12 tap report. If the values don't match the conditions, then the faulty sensor should be replaced. The humidity sensor is mounted on the main PCA, so in that case, the main PCA will need to be replaced.

1. On the **Printing Preferences** tab click the **Color** tab, and then unselect the **HP EasyColor** option.
2. Click the **Ink Settings** button.
   - Increase the **Dry Time** setting to help resolve the following issues:
     - Roller tracking
     - Ink smearing
     - Starwheel tracking

     NOTE: Increasing the **Dry Time** setting will slow down the overall printing process. Changing the **Dry Time** setting is most effective when using plain paper.
   - Decrease the **Saturation** setting to help resolve the following issues:
     - Roller tracking
     - Ink smearing
     - Starwheel tracking

     NOTE: Decreasing the **Saturation** setting might cause fading in the printed output. Changing the **Saturation** setting is most effective when using brochure or photo paper.
   - The **Saturation** setting determines how much ink is used to achieve the print job. This setting is a value in the range of -2 to 2. The default setting is 0. Increasing **Saturation** setting might make images look more vibrant.
   - The **Black Ink Spread** setting can help control ink spread or wicking on different types of media. This setting can be changed to one of the following values:
     - **Default**: This value is the default black ink spread setting.
     - **Less**: This value sets the ink spread at about halfway between **Default** and **Least**.
     - **Least**: This value imposes the most control on black ink spread.

     Decreasing the **Black Ink Spread** will improve areas where black and color are adjacent if the black is spreading into the adjacent color.

Diagnose print quality problems using the Print Quality Page

Print and interpret the print quality page

1. Load the product with regular, unused white paper.
2. On the control panel, touch the Setup button.
3. Open the Print Reports menu.
4. Select the print quality report item to print it.

This page contains four bands of color, which are divided into the groups as indicated in the following illustration. By examining each group, you can isolate the problem to a particular ink cartridge.

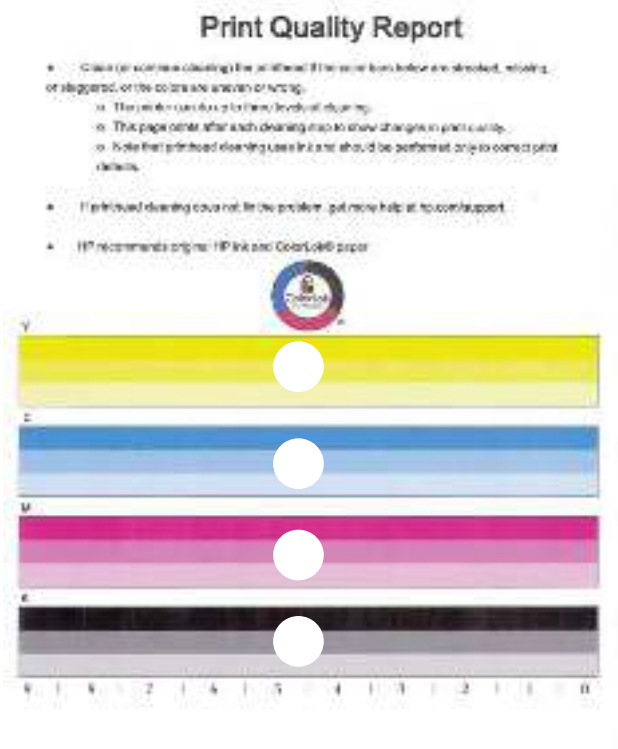

Table 2-5 Print Quality Page ink cartridge identification

Section	Ink cartridge
1	Yellow
2	Magenta
3	Cyan
4	Black

TIP: Mark this page with a “1” in a corner. If you clean the printhead later, you will want to keep track of which page was printed first, in order to note any progress.

In general, if the ink system is working correctly, all the color bars are present and not streaked. Each bar has three distinct shades, but otherwise the color should not vary across the bar. The bars should also be evenly lined up. The black text on the page should not show ink streaks.

The following table shows some representative examples of defects on the print quality report.

Table 2-6 Print quality defect examples

Defect/action to take	Example
Color variation/ink mix across bar Clean the printhead on page 84	
Color intensity/ink mix variation across bars Clean the printhead on page 84	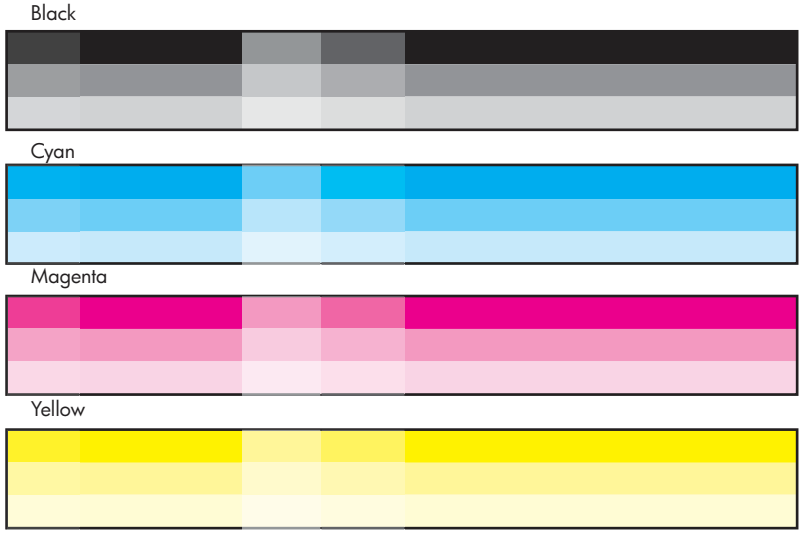

Table 2-6 Print quality defect examples (continued)

Defect/action to take	Example
Uneven bars/die misalignment Clean the printhead on page 84	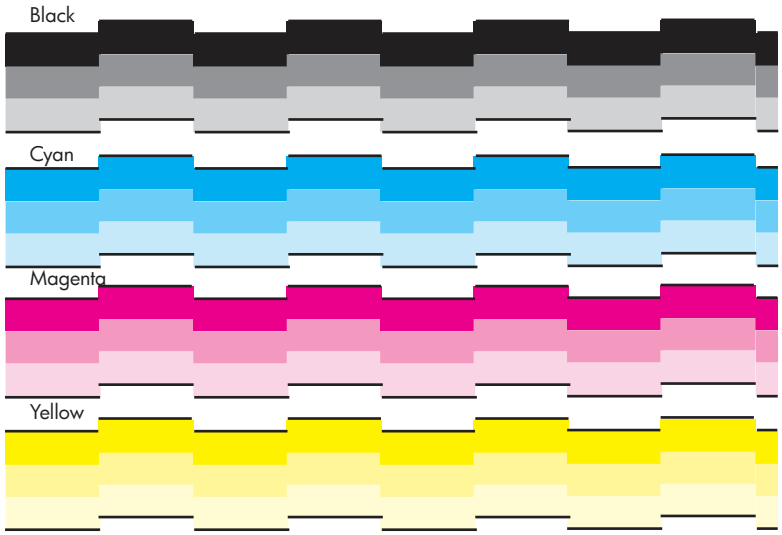
Vertical dark lines Clean the printhead on page 84	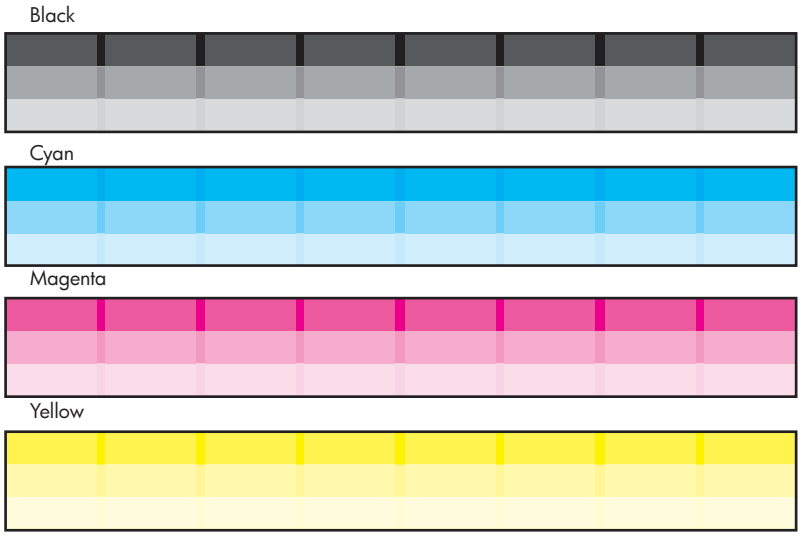

Table 2-6 Print quality defect examples (continued)

Defect/action to take	Example
Vertical white lines on all bars Clean the printhead on page 84	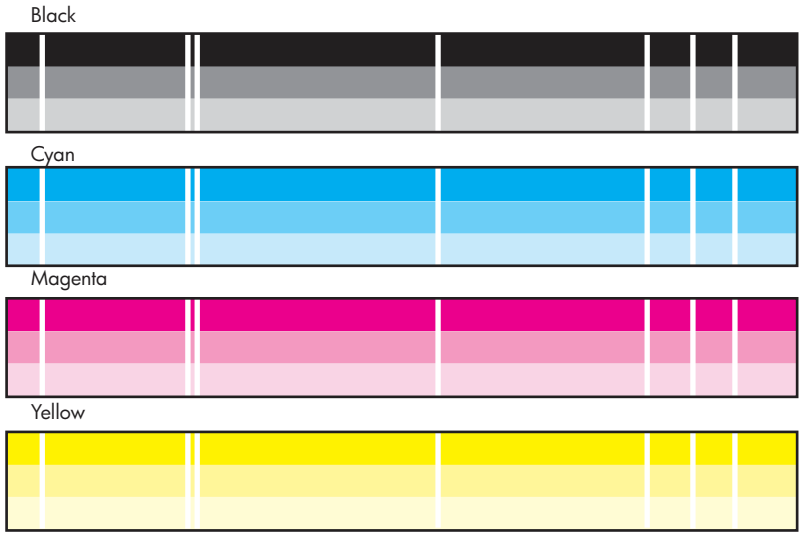
Vertical white lines on select bars Clean the printhead on page 84	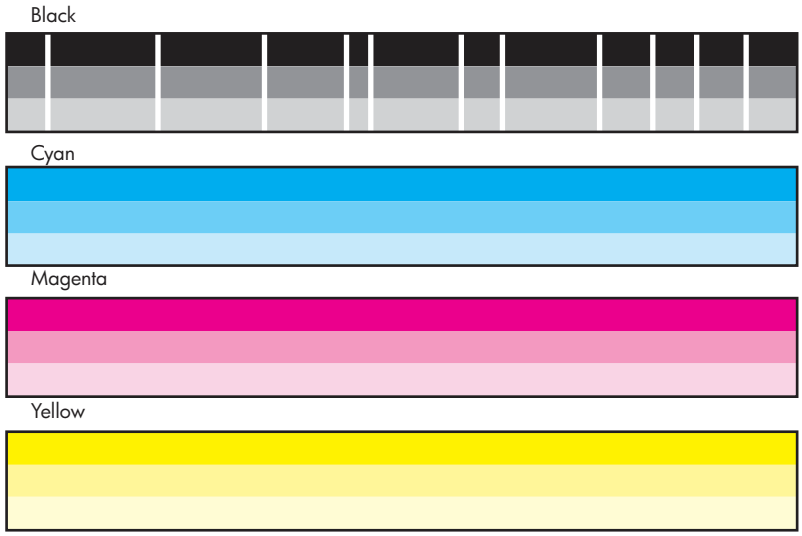

Table 2-6 Print quality defect examples (continued)

Defect/action to take	Example
Shade gradations not sharp Clean the printhead on page 84	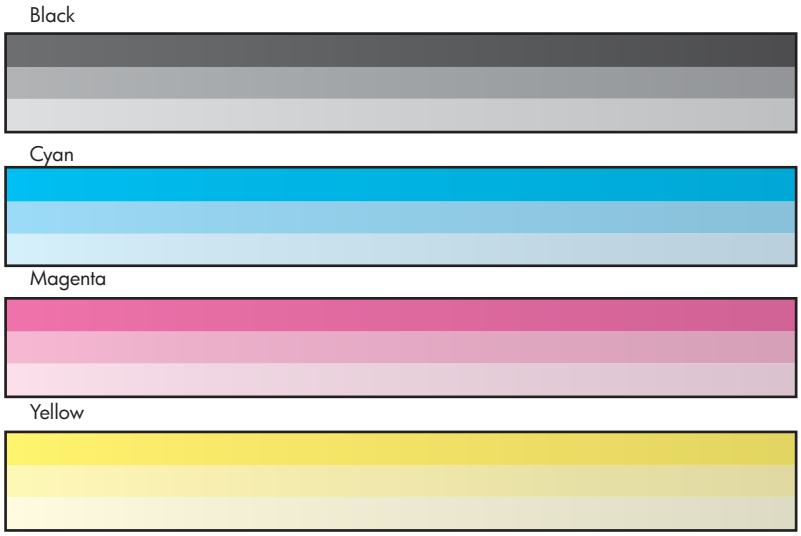
Nozzles out Clean the printhead on page 84	
Deprime or starvation 1. Ensure that the ink cartridge has ink and is installed correctly. 2. Clean the printhead on page 84. If print quality improves after the first phase of printhead cleaning, continue to the second phase. If print quality does not improve after the first phase of printhead cleaning, service the product.	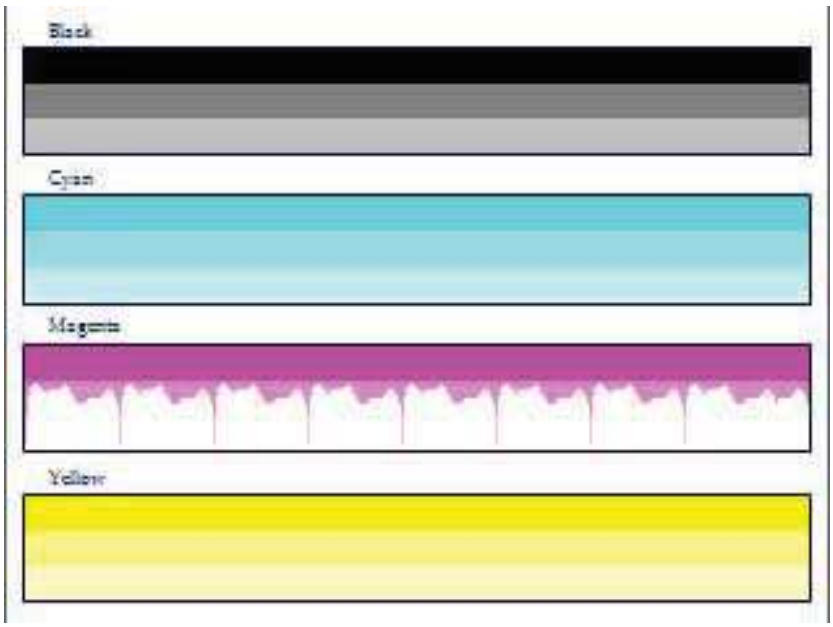

Table 2-6 Print quality defect examples (continued)

Defect/action to take	Example
Page is blank or only partially printed Clean the printhead on page 84	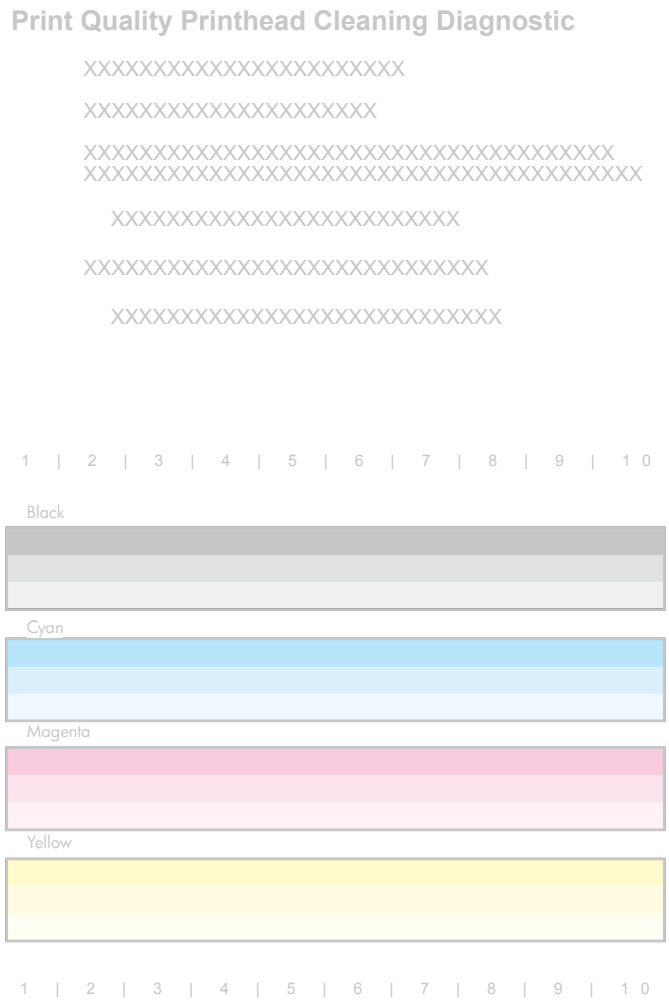
Scratches on the paper, especially thicker paper. It will be very difficult to determine whether the white line is caused by printing issues or a scratch caused by a mechanical issue. For remote support, unless the customer is very sure they have a scratch (evidenced by physical damage to the media), then you should have them run through the pen cleaning procedure. If you are certain that is a mechanical issue , see Service technician notes on page 91. Clean the printhead on page 84	

Solve print quality issues

Clean the printhead

If the print quality report shows defects like the ones listed in Print and interpret the print quality page on page 78, clean the printhead.

The printhead cleaning process consists of three phases. After each phase completes, a Print Quality Diagnostics page is printed. The user is prompted to check the page, and continue onto the next section if the problem is not solved. The printhead cleaning process takes approximately 30 minutes to complete.

Printhead cleaning phases

Phase 1: Spit, BDD 1 calibration

Phase 2: Prime, Service, Wipe, BDD 2 calibration

Phase 3: Align and density calibration

If the printhead cleaning process is interrupted, for example by a power outage or an error condition, when the process is started again it will attempt to start where it was interrupted.

1. Load the product with regular, unused white paper.
2. On the control panel, touch the Setup button.
3. Open the Tools menu.
4. Select the Clean Printhead item.

   TIP: Number each of the print quality pages so you don't lose track of the prints later.

5. If you finish the cleaning process and still see defects on the print quality report, retry cleaning, especially if you have seen improvement in the print quality reports.
6. If the print quality report still shows defects after a second cleaning, go to the next section to service the product.

If the defect on the print quality report is color variation across the bars (see Print and interpret the print quality page on page 78), and if the problem seems to go away after a cleaning, but then reoccurs in the same location on the color bar the next day, complete the following procedure:

1. Check to see if any of the following conditions are true:
   - Prior to the print quality problem, the product was unused for more than three weeks.
   - The product was recently moved or experienced a large temperature shift.
   - There was a recent paper jam.
   - The print quality problem seems to be getting better as the product is used (especially if print jobs with dense backgrounds are printed).

If any of these conditions exist, instruct and assist the customer in performing a printhead recovery. See Printhead recovery on page 86.

2. If none of the conditions above are true, the color problem is likely to reoccur, even if a cleaning fixes it temporarily.

If the print quality report has no defects, then the ink system is working correctly. There is no reason to clean the printhead, which unnecessarily wastes ink and paper. Complete the following steps:

1. Retry the original print job. Just printing the print quality report can solve some problems. If the print job meets print quality standards, stop troubleshooting here.
2. If problems still exist on print jobs, review the earlier steps in this document: make sure that the ink and paper are appropriate, and that the print settings are correct. In addition, these suggestions might help with some problems:
   - If you are printing an image, make sure it has sufficient resolution. Images that have been enlarged too much might appear fuzzy or blurry.
   - If the problem is confined to a band near the edge of a printout, use the software you installed with the product or another software program to rotate the image 180°. The problem might not appear on the other end of the printout.
   - Always use the power button to turn the product off. This protects the printhead from exposure to air.
   - If all colors are experiencing poor print quality, there might be an issue with the Web wipe not advancing. Open the left door, and then mark the edge of the Web wipe above the duplex module.

     Figure 2-7 Mark the Web wipe

     Run the product so that it performs a wipe, and then see if the Web has advanced. If it has not, replace the Web wipe/service sled assembly using the service sled kit (part number CN598-67021).
3. If the problem persists, contact HP to service the product.

Clean ink smears

Print a cleaning page to remove dust and excess ink from the printhead and paper path if you are having any of the following problems:

- Specks of ink are on the printed pages.
- Ink is smearing on the printed pages.
- Repeated marks occur on the printed pages.

Use the following procedure to clean ink smears.

1. Load the product with regular, unused white paper.
2. From the control panel, touch the Setup button.
3. Open the Tools menu.
4. Select the Clean Ink Smear item.
5. Touch the OK button to begin the cleaning process.

   A page feeds through the product slowly. Retain this page for further print quality evaluation.

If the print jobs are showing ink smears on the back of the page, try the following solutions:

- Remove the duplex module and then reinstall it. Black ink can build up on the duplex module on products that have been used heavily (over 100,000 pages of printed output).
- The platen might have an ink buildup. Run a few sheets of blank (no text/graphics) thick paper through the product to clean the platen.
- Check the ink service station level:
  1. Open the Support Menu by pressing the Back button four consecutive times.
  2. Scroll to the System Configuration Menu.
  3. Select Service ink container or Duplex module.
  4. Select View current status.
- If the error persists, service the product.

Printhead recovery

Use the printhead recovery procedure if a color mix issue reappears after printhead cleaning, but one of the following is true:

- Prior to the print quality problem, the product was unused for more than three weeks.
- The product was recently moved or experienced a large temperature shift.
- There was a recent paper jam.
- The print quality problem seems to be getting better as the product is used (especially if prints with dense backgrounds are printed).

IMPORTANT: Never perform the printhead recovery procedure more than two times in one day. Excessive printhead recovery wastes ink and can result in ink leaks.

1. From the Home menu, touch the Back button four times consecutively.
2. Select Support Menu.
3. Open the Printhead Diagnostic Menu, and then select Printhead Recover.

   -or-

   Open the Reports menu, select Print Mech Button Tap, and then select 23 to perform a 23 Tap test. A printhead recovery is performed as part of the 23 Tap test.
4. Touch the OK button.

Advanced cleaning

If white lines still appear in printed output after the printhead and ink smears have been cleaned, the cause of the white lines could be a shim whisker. This issue typically appears with products with high page counts that operate in dirty environments.

A shim whisker is a piece of fiber (such as carpet fiber or hair) adhering to either the printhead or to the shims underneath the printhead. On denser images, it can also result in ink drips/smearing on the page.

If shim whiskers are suspected, ship the customer an Advanced Cleaning Kit (part number CN459-67006).

Use the Advanced Cleaning Kit

1. From the Setup menu, select Tools, and then select Advanced Cleaning.
2. Load the foam-backed sheet included in the Advanced Cleaning Kit into the product, and then touch OK. The foam-backed sheet feeds through the product slowly, about two inches per second.

   NOTE: The cleaning sheet must be run through the product with the correct orientation. The foam pad should be closer to the left side of the paper tray. If the cleaning sheet is run through with the wrong orientation, it will still work, but there is the possibility of the user experiencing an output paper jam.

   NOTE: The foam-backed sheet might need to be run through the product more than once to remove the fiber.

NOTE: Vertical lines in the printed output can have other causes besides shim whiskers. Use of the Advanced Cleaning Kit is normally the last step before servicing the product to solve this issue.

Other Support Menu print quality procedures

NOTE: These procedures are normally used by service technicians.

Solve “ghosting” print quality issues

1. From the Home menu, touch the Back button four times consecutively.
2. Select Support Menu.
3. Open the Reports Menu.
4. Select Print-mech button test.
5. Select 22, and then touch the OK button.

Solve incomplete alignment issues

Print a printer status page. The results of these calibrations is listed in row 69 of the printer status page. If the number of successful calibrations is zero, or if you think that the last calibration effort failed, then run the pen alignment calibration and/or the printhead die density calibration using the following steps.

NOTE: These calibrations are also implicitly called in the Clean Printhead tool, and this would be the way a customer would invoke calibrations. This method would typically only be used for service tech test/troubleshooting.

1. From the Home menu, touch the Back button four times consecutively.
2. Select Support Menu.
3. Open the Printhead Diagnostic Menu, and then select Printhead Calibration.
4. Select either Pen Alignment Calibration or Printhead die density calibration.

Inspect the ink cartridge for damage

Ink cartridges should be cleaned and inspected for damage if any of the following control-panel messages appear:

- **Ink Cartridge failure**
- **Problem with SETUP cartridges**
- **Ink Cartridge problem**

If cleaning the ink cartridges does not clear the error message, use the following steps to inspect the ink cartridge for damage:

1. Remove the ink cartridge from the product, and verify that there is no debris in the cartridge path.

2. Examine the metal connector of the ink cartridge.

CAUTION: Do not touch the metal connector on the edge of the cartridge. Fingerprints on the metal connector can cause print-quality problems.

3. If you see any scratches or other damage on the metal connector, replace the ink cartridge.

4. If the metal connector does not appear to be damaged, push the cartridge gently back into its slot until it locks in place. Print a few pages to see if the problem has resolved.

NOTE: If any of these control-panel messages appear while the product is being installed, and the product initialization hasn't completed, then the setup cartridge much be replaced with another setup cartridge. If the customer cannot wait for a new setup cartridge to be delivered, it is possible to override the use of setup cartridges, and use trade cartridges. In this case, you must use full XL cartridges. Use the following steps to override the use of setup cartridges.

Override the use of setup cartridges

1. Open the Support menu.

2. Select System Config, and then select Trade at OOBE.

3. Ensure that all doors and trays are closed.

4. Unplug the product, wait 30 seconds, and then plug the product back in.

5. If trade supplies are being used with an override to initialize, replace any cartridges that feel light or might be empty.

   -or-

   Touch OK when the **Startup Routine Ink Alert** message appears.

   -or-

If a **Depleted** or **Printer Failure** message appears, replace with new setup cartridges, or override to startup with (different) trade cartridges.

6. If message reappears, service the product.

NOTE: If the message clears and the product successfully initializes, the cartridge might show low on ink.

Improve print quality for copies

If you encounter print quality problems in copied documents, review the solutions for printed documents listed previously in this document. However, some print-quality problems occur only in copied documents.

- If streaks appear on copies made using the document feeder, clean the small glass strip on the left side of the scanner assembly.
- If dots or other defects appear on copies made using the scanner glass, clean the scanner glass and the white plastic backing.

1. Use the power switch to turn off the product, and then unplug the power cord from the electrical socket.
2. Open the scanner lid.
3. Clean the scanner glass and the white plastic backing with a soft cloth or sponge that has been moistened with nonabrasive glass cleaner.

CAUTION: Do not use abrasives, acetone, benzene, ammonia, ethyl alcohol, or carbon tetrachloride on any part of the product; these can damage the product. Do not place liquids directly on the glass or platen. They might seep and damage the product.

4. Dry the glass and white plastic backing with a chamois or a cellulose sponge to prevent spotting.
5. Plug in the product, and then use the power switch to turn on the product.

Service technician notes

If the customer can't solve the print-quality issue through any of the tools and procedures available to them, then the product must be serviced.

- In some cases, maintenance ink can persist through cleaning efforts. Check that the problems aren't being cause by ink somewhere in the system.
- It's also possible that some print-quality issues can be caused by a jammed starwheel. This will typically look like a narrow white line down the page. If the customer continues to experience a white vertical line, then the problem could be caused either by a stuck starwheel, or a piece of debris stuck somewhere along the paper path. The horizontal location of the issue can be determined by the location of the line on the page. In any case, inspect the whole paper path. Note that if this line only appears on one page of a duplexed output, then the stuck starwheel/ debris is likely on the duplex module.
- If all troubleshooting tools and procedures fail, replace the printbar.
- When replacing the printbar, check the condition of the service sled. HP recommends that the service sled be replaced on products that have printed more than 30,000 pages.

Solve paper handling problems

- Paper handling troubleshooting flowchart
- Paper pickup issues
- Clear jams

Paper handling troubleshooting flowchart

1 **Is the paper installed correctly?**	Paper tray guides must be set correctly, supported paper sizes must be used, must using good quality paper–HP ColorLok is recommended.		See the *HP OFFICEJET PRO X476 AND X576 MFP SERIES* user guide for more information.
	Yes ↓	No →	
2 **Does product fail to pick up paper, or pick multiple sheets?**	No ↓	Yes →	See or The product picks up multiple sheets of paper on page 93.
3 **Is the product experiencing paper jams?**	Is paper jammed in any of the input or output areas (including the document feeder), print zone, or other location in the print path?		See Clear jams on page 99. **NOTE:** For information on preventing paper jams, see Prevent paper jams on page 99.
	No ↓	Yes →	
4 **Other paper handling problems**	• Trays 2 or 3 report being empty when they have paper loaded–see The product states that a paper tray is empty, even though it has paper on page 94. • Frequent paper jams–see Frequent jams in the paper path (onsite solutions) on page 96. • Abnormal noises when feeding paper–see The product makes grinding noises when feeding paper on page 94. • The output motor stalls–see Output motor stall on page 97. • The output flap doesn't retract and nothing is blocking it–see Output flap won't retract - no obstacle to prevent it on page 97.		

Paper pickup issues

Resolve paper pickup issues

The product does not pick up paper

If the product does not pick up paper from the tray, try these solutions.

1. Open the product and remove any jammed sheets of paper.
2. Load the tray with the correct size of paper for your job.
3. Make sure that the paper guides in the tray are adjusted correctly for the size of paper. Align the guides with the paper-size markings in the bottom of the tray.
4. Remove the stack of paper from the tray and **flex it**, rotate it 180 degrees, and flip it over. *Do not fan the paper.* Return the stack of paper to the tray.
5. Check the product control panel to see if the product is waiting for you to acknowledge a prompt to feed the paper manually through Tray 1, the multi-purpose tray on the left side of the product. Load paper, and continue.

   Onsite solutions

   On products that have seen a lot of use, the pick tire/separator pad might be worn. Replace the pick tire/separator pad if they are worn.

   Verify that the pick shaft rotates. If the pick shaft does not rotate, check the pick motor connectors to verify they are connected securely and undamaged. Verify that the transmission operates correctly.

The product picks up multiple sheets of paper

If the product picks up multiple sheets of paper from the tray, try these solutions.

1. Remove the stack of paper from the tray and **flex it**, rotate it 180 degrees, and flip it over. *Do not fan the paper.* Return the stack of paper to the tray.
2. Use only paper that meets HP specifications for this product.
3. Use paper that is not wrinkled, folded, or damaged. If necessary, use paper from a different package. Make sure all paper in the tray is the same type and size.
4. Make sure that the tray is not overfilled. If it is, remove the entire stack of paper from the tray, straighten the stack, and then return less paper to the tray.
5. Make sure that the paper guides in the tray are adjusted correctly for the size of paper. Align the guides with the paper-size markings in the bottom of the tray.

   Onsite solution

   Replace the pick tire/separator pad.

The product states that a paper tray is empty, even though it has paper

1. Ensure that there is paper in the tray, and that the tray is adjusted correctly.
2. Verify that the correct tray is being selected.

   Onsite solutions

   Ensure that the tray lift mechanism on the tray is working. Remove the tray from the product. Remove the paper from the tray. Push the ratchet mechanism on the back of the tray. If the metal base of the tray lifts up, check the following:

   - Check the media presence sensor flag. If the media presence sensor flag is broken or does not move freely, replace it.
   - Determine if the tray lift mechanism is functioning by removing the rear cover and observing the tray while it operates. Verify that the return spring is in place, and then push the ratchet mechanism to the left. The ratchet mechanism should operate smoothly and the metal floor in the tray should rise when the ratchet is pushed. Replace the tray lift mechanism if it is defective.

     Figure 2-8 Tray lift mechanism

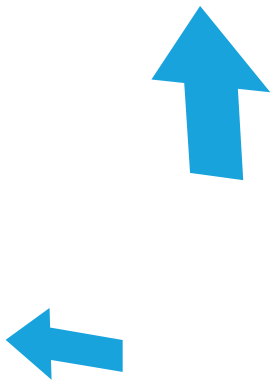

   - If metal base of the tray does not lift up, then replace the tray.

The product makes grinding noises when feeding paper

If the product makes grinding noises when trying to feed paper, there might be an obstruction in the paper path or a REDI sensor might be defective. Have the customer feed a sheet of stiff paper into

the product to try to dislodge the paper path obstruction. A paper scrap might be lodged in the paper path.

Onsite solutions

If the product makes grinding noises when feeding paper, and there are no obstructions in the paper path, verify that the service sled transmission is in the correct position.

If the service sled transmission is in the correct position, check the REDI sensors. Use an IR sensitive camera (most cell phone cameras work) to determine if all the REDI sensors are operational. You can also determine where a failed REDI sensor might be by how far the paper gets through the paper path before a jam is signaled. The TOF REDI and Print zone REDI are contained on the platen. The platen is field replaceable. The Lower paper path, upper paper path and Eject REDIs are all field replaceable.

If there is a sheet of paper at feed roller and the product sounds like it keeps trying to repick the sheet, then lifts the tray, then tries to pick the paper again several times:

- There might be a calibration issue with the TOF REDI (TOF sensor). Recalibrate the REDI sensor through the Support menu. See Access the Support Menu on page 42 for information on accessing the Support Menu.
- Verify that the print zone distribution cable (cable 17) is plugged in correctly to J26 on main PCA and is not shorting.
- Verify that there is no damage to the cables.

General paper jams issues (onsite solutions)

Onsite solutions

Ensure that the FFCs for the Lower paper path, upper paper path, and eject REDI sensors are undamaged and securely connected. If any of these REDI sensors are defective, replace them.

If the product states that there is a paper jam, but the paper is undamaged, then it is most likely a REDI sensor, motor, or feed encoder issue. The location of the suspect REDI can be determined approximately by how far the paper moved through the paper path. See Figure 1-6 Product sensors on page 18 for REDI locations and naming.

Recalibrate the REDI sensors.

Verify that the feed motor/encoder is not defective.

Verify that the FFCs at the feedshaft encoder PCA/print zone distribution PCA are undamaged and securely connected.

Verify that the motor connections on the main PCA (J5) are undamaged and securely connected. Replace the feedshaft encoder PCA. The feed motor is not replaceable.

Output tray jam errors (onsite solutions)

Onsite solutions

Ensure that the output flap sensor tab is not broken. If the output flap sensor tab is broken, install a new output flap.

Ensure that the output flap sensor FFC is undamaged and securely connected.

Verify that the output flap sensor is not damaged. Replace the sensor/flap if the output flap sensor is damaged.

Frequent jams in the paper path (onsite solutions)

Onsite solutions

Make sure that there are no star-wheels missing or damaged. Check components such as the duplex module to verify that the star-wheels are intact and working properly. If a star-wheel is seized, free it. Otherwise, replace the assembly on which the star-wheels are located.

Print zone jams

If paper was torn while clearing a print zone jam but the product still reports a jam in the print zone, there might be scraps of paper obstructing the print zone. Verify that the TOF void area is clear of any scraps of paper by running a heavy sheet of paper through it (sometimes referred to as the “snowplow” method):

Clear the TOF area of paper scraps

1. Touch the Home button.
2. Touch the Back button four times.
3. Select Support Menu.
4. Scroll to Print Diagnostics Menu, and then touch the OK button.
5. Select Clear paper jams.
6. Load a sheet of paper into tray 1 when the control-panel message prompts you, and then touch the OK button.
7. After the paper feeds through the product the jam recovery process is complete. Press the **Cancel** button until you return to the Home screen.

   Onsite solutions

   Clear the TOF area of paper scraps using the steps in Clear the TOF area of paper scraps on page 96 and then follow these steps:

   a. Recalibrate the TOF sensor emitter from the Service Menu.
   b. Inspect the contacts for damage on J26 on main PCA where FFC, 11 pin print zone cable plugs in. Ensure that the FFC is securely attached. Damaged contacts on the connector or improper insertion of the FFC could cause shorting.
   c. Replace the TOF sensor if it is defective.
   d. Replace any damaged cables that might be shorting to metal.

e. Inspect the print zone distribution PCA solder ball for signs of shorting. Replace the print zone distribution PCA (CN459-60083) if it is defective.

f. If the main PCA connector is defective, or the main PCA has a defective component, replace the main PCA.

NOTE: Problems with the main PCA connector or components are unlikely.

If paper will not feed into the product, the TOF REDI sensor might be defective or disconnected.

If paper feeds into the print zone and a jam message is displayed, but there is no damage to the paper or signs of an actual jam, then the either TOF REDI or Print Zone REDI sensor might be faulty.

If the problem only occurs during duplex printing, then the Lower paper path REDI and the Upper paper path REDI sensors might be defective.

The output drive train could be worn or broken if the product has been in use for a long time.

Ensure that the TOF and Print zone REDI sensor FFCs on the print zone distribution PCA are undamaged and securely connected. These FFCs are located second from the front – one FFC is white, the other is black.

If either the TOF or Print zone REDIs are faulty, we recommend that you replace the platen, rather than the individual REDI sensors.

Check the output drive train (gear train in front of the cube) gear(s). If the gears are worn, replace them using the output drive kit.

Output motor stall

Clear any paper that might be blocking the output area.

Onsite solutions

Verify that there is no debris blocking the eject gear module/eject flap actuator.

If the output flap opens, then the encoder disc could be faulty. Replace the output drive system.

If the flap doesn’t open, then the motor could be faulty. Replace the output drive system.

In very rare cases, the main PCA could be defective.

Output flap won't retract - no obstacle to prevent it

Turn the product off, then on.

Onsite solutions

Verify that the output solenoid is not defective and the solenoid cable is undamaged and securely connected.

Verify that the rack-eject lifter flap is not defective.

Verify that the output assembly is not defective. Replace the output assembly if it is defective.

Clear jams

Resolve paper jam issues

Prevent paper jams

To reduce the number of paper jams, try these solutions.

1. Use only paper that meets HP specifications for this product. Light-weight, short grain paper is not recommended for use in this product.
2. Use paper that is not wrinkled, folded, or damaged. If necessary, use paper from a different package.
3. Use paper that has not previously been printed or copied on.
4. Make sure the tray is not overfilled. If it is, remove the entire stack of paper from the tray, straighten the stack, and then return some of the paper to the tray.
5. Make sure the paper guides in the tray are adjusted correctly for the size of paper. Adjust the guides so they are touching the paper stack without bending it.
6. Make sure that the tray is fully inserted in the product.
7. If you are printing on heavy, embossed, or perforated paper, use Tray 1, the multi-purpose tray on the left side of the printer, and then feed sheets manually one at a time.

Jam locations

Jams can occur in these locations:

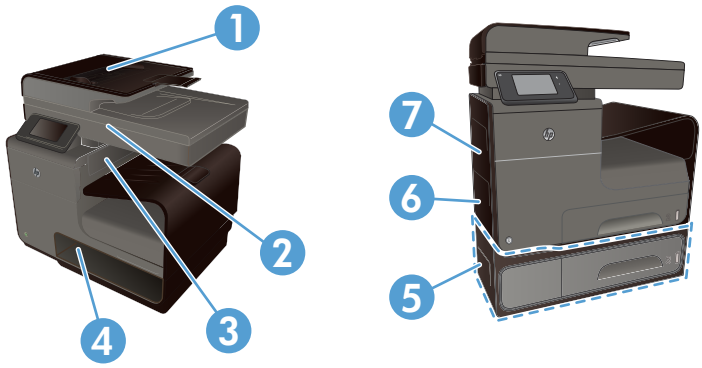

1	Document feeder
2	Scanner
3	Output bin
4	Tray 2
5	Optional Tray 3 and left jam-access door

6	Tray 1
7	Left door

Traces of ink might remain in the product after a jam. This problem typically resolves itself after a few sheets have been printed.

Clear jams from the document feeder

1. Leave the product power on.

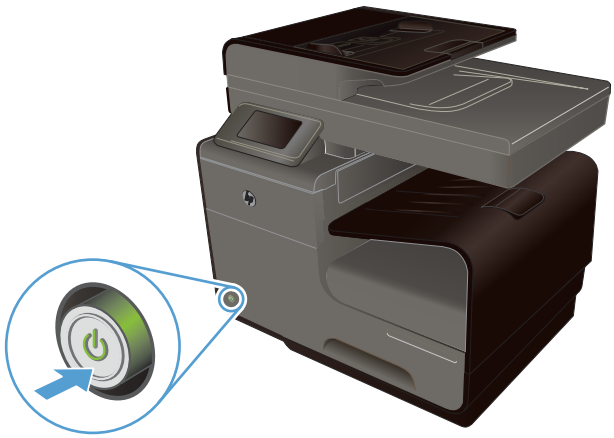

2. Open the document feeder cover.

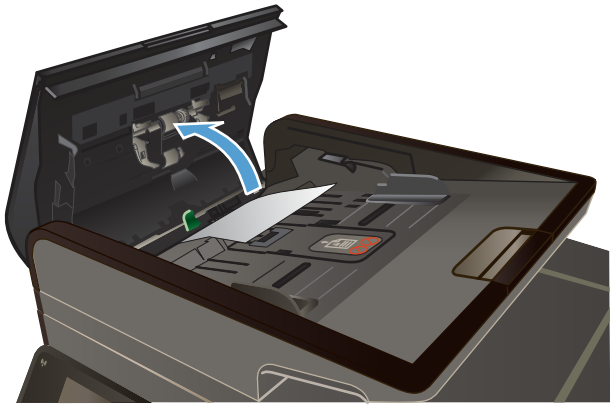

3. Lift the document feeder roller assembly, and gently pull the jammed paper out.

4. Close the document feeder cover.

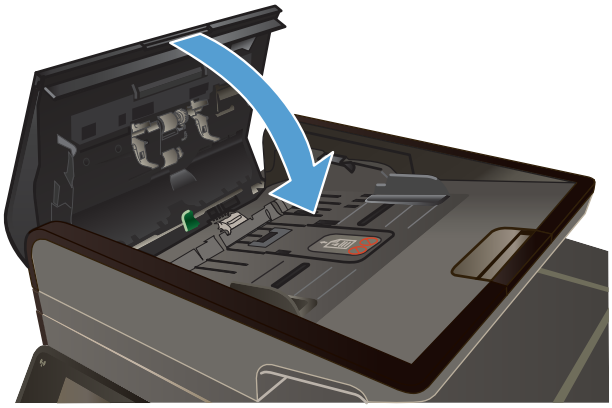

5. Open the scanner lid. If paper is jammed behind the white plastic backing, gently pull it out.

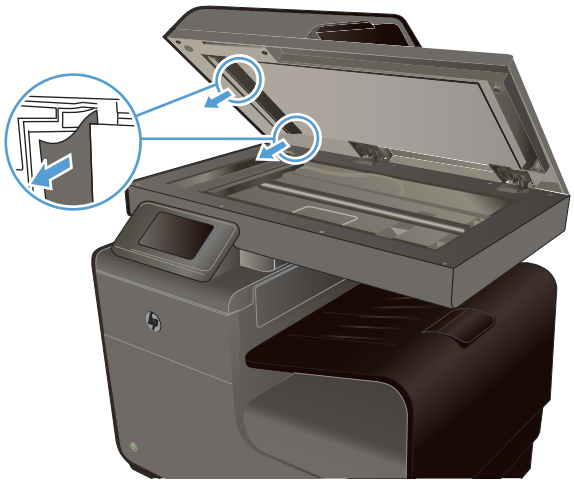

6. If the paper jams issue cannot be solved, replace the document feeder. This is a CSR B part, CN598-67008.

Clear jams in Tray 1 (multi-purpose tray)

1. If the jammed sheet is visible and easily accessible in Tray 1, pull it from Tray 1.

   NOTE: If the sheet tears, make sure that all of the fragments are removed before you resume printing.

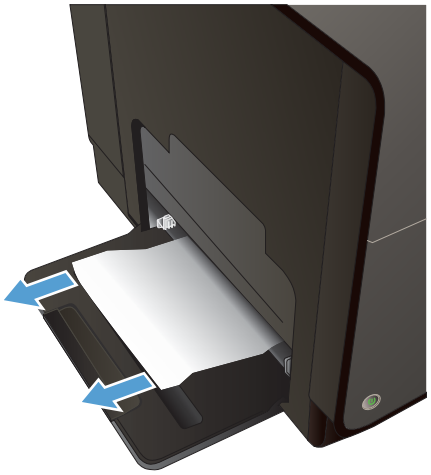

2. If the jammed sheet is not visible or easily accessible in Tray 1, open the left door to access the jammed sheet.

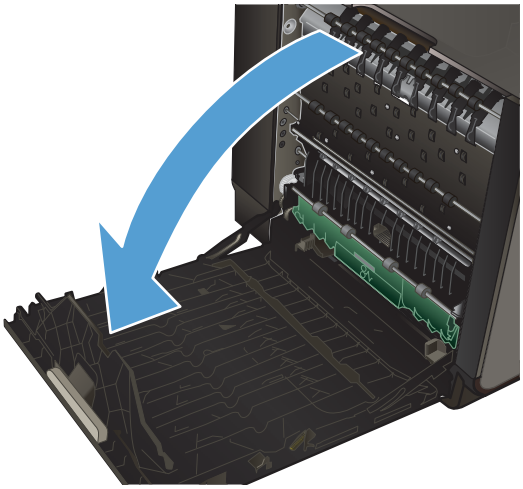

3. If the paper is still not visible or accessible, remove the duplexer by pulling it out with both hands. Set the duplexer aside, upright, on a piece of paper to prevent ink spills.

   CAUTION: When pulling out the duplexer, avoid making direct contact with the black cylinder to prevent ink smear on skin or clothes.

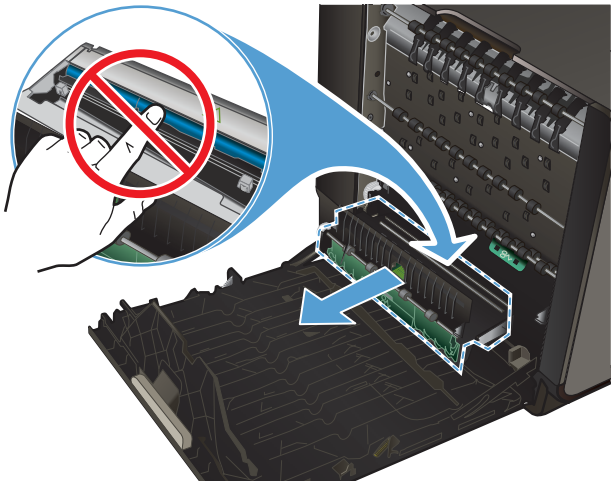

4. Lower the platen by pressing down on the green tab. This will cause the product to try to feed the sheet through the print zone. You might need to gently pull on the sheet if it does not feed. Remove the sheet.

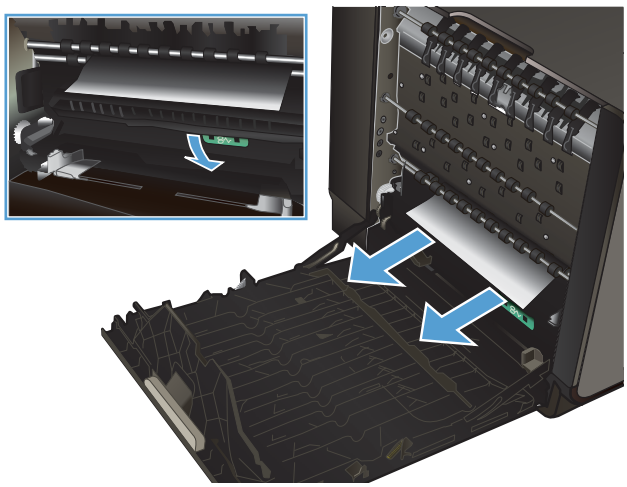

5. Lift the green tab to place the platen back into its operating position.

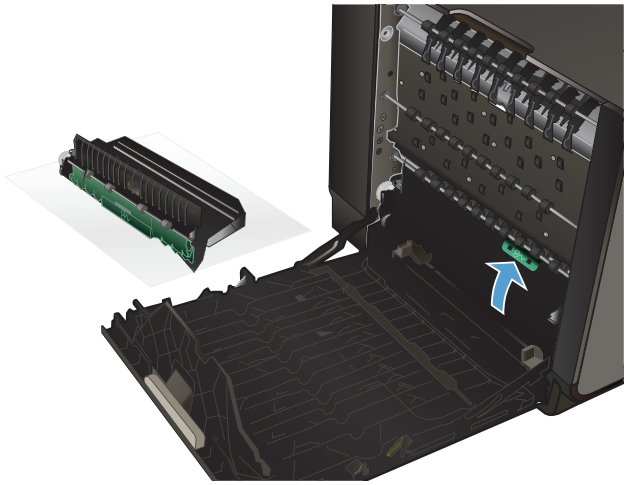

6. Reinstall the duplexer.

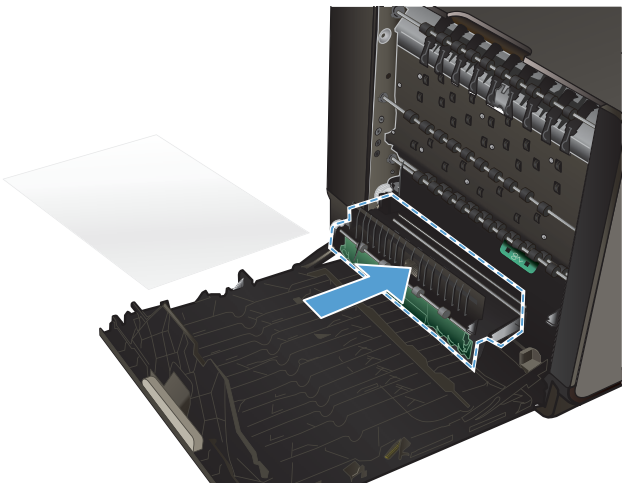

7. Close the left door.

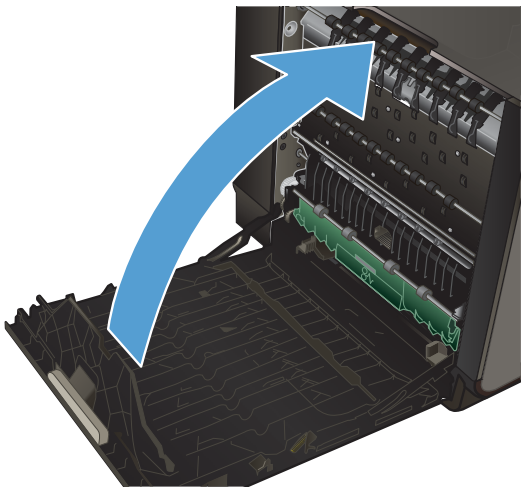

If the product does not try to pick paper from the tray, paper from the previous print job might be stuck in the paper path and must be cleared. The product not trying to pick paper can be identified by a lack of gear noise.

Tray 1 parts are not field replaceable.

Clear jams in Tray 2

1. Open Tray 2 by pulling it out and releasing the latch at the rear left of the tray.

2. Remove the jammed sheet by pulling it to the right and then out of the product.

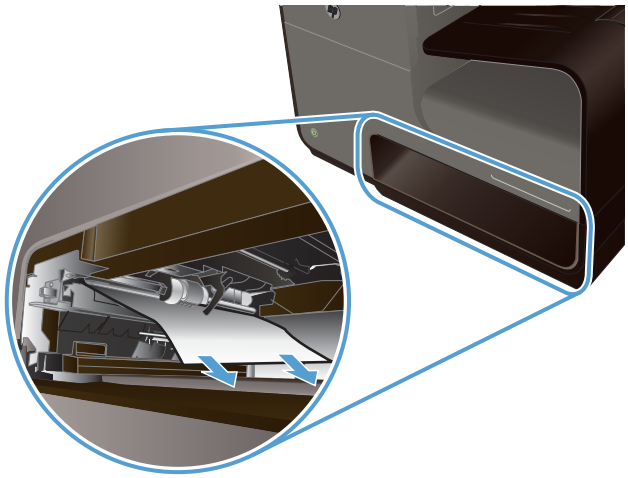

3. Close Tray 2.

   NOTE: To close the tray, push in the middle or with even pressure on both sides. Avoid pushing on one side only.

NOTE: If there is no paper in Tray 2, but the product continues to attempt to pick paper, then eventually gives a paper jam in Tray 2 error, check the media presence flag opto sensor. The sensor could be faulty, or the FFC disconnected or defective. If the FFC is not disconnected or defective, replace the media presence flag opto sensor.

Clear jams in optional Tray 3

1. Open Tray 3.

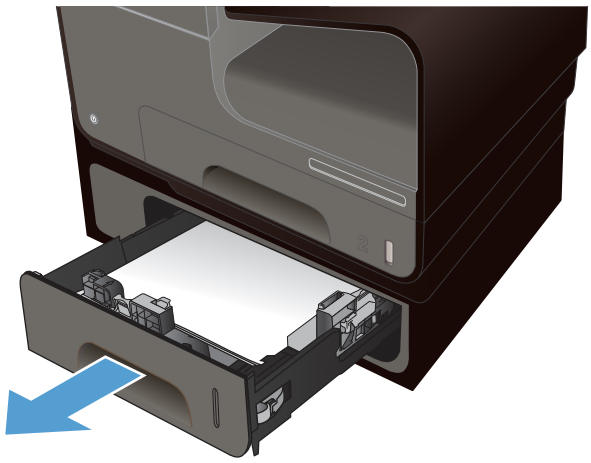

2. Remove the jammed sheet by pulling it to the right and then out of the product.

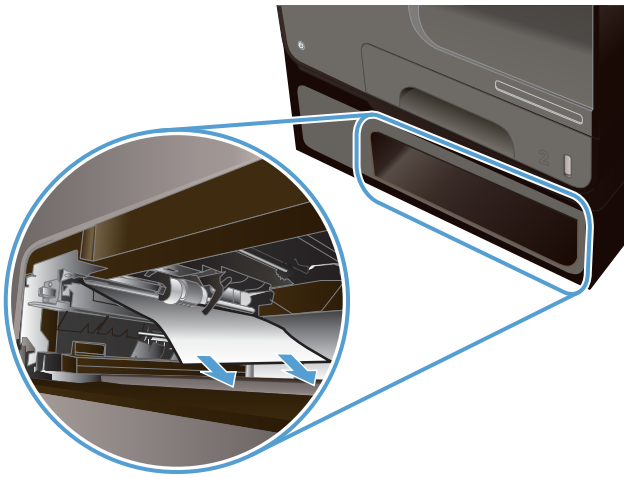

3. If the jam cannot be cleared at the tray, try clearing the jam from the Tray 3 left door.

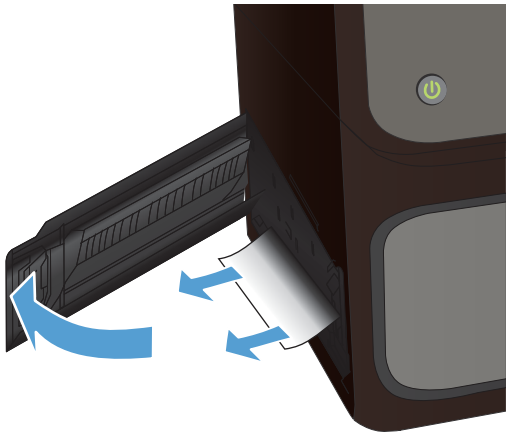

4. Close Tray 3.

   NOTE: To close the tray, push in the middle or with even pressure on both sides. Avoid pushing on one side only.

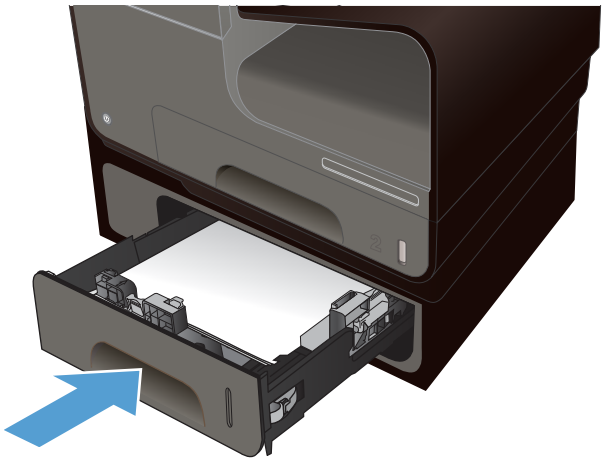

5. If the paper jams issue cannot be solved, replace Tray 3. This is a CSR part, CN598-65003.

Clear jams in the left door

1. Open the left door.

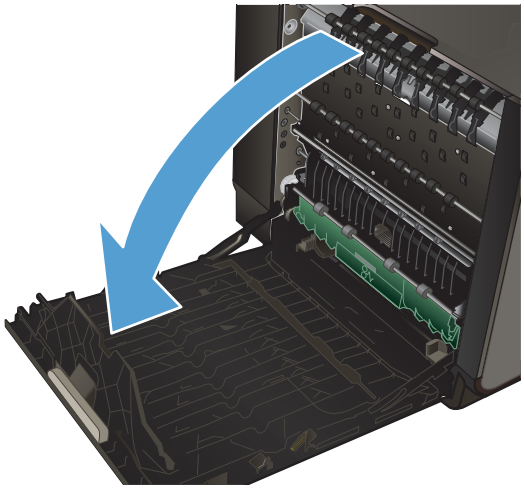

2. Gently remove any visible paper from the rollers and delivery area.

   NOTE: If the sheet tears, make sure that all fragments are removed before you resume printing. Do not use sharp objects to remove fragments.

3. Close the left door.

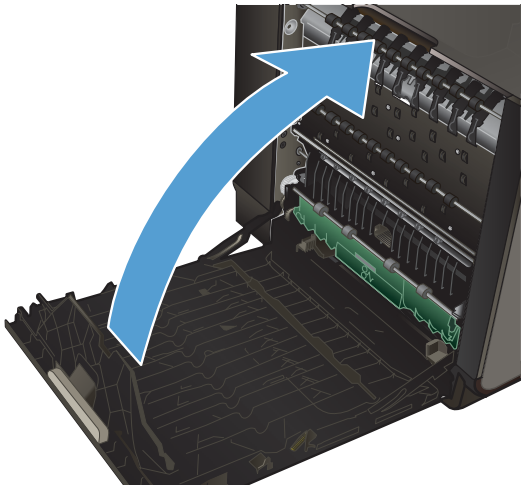

Clear jams in the output bin

NOTE: Make sure that the output eject flap is installed and working correctly. If it is missing or broken, replace the flap.

1. Look for jammed paper in the output bin area.
2. Remove any visible media.

   NOTE: If the sheet tears, make sure that all fragments are removed before resuming printing.

3. Open and then close the left door to clear the message.

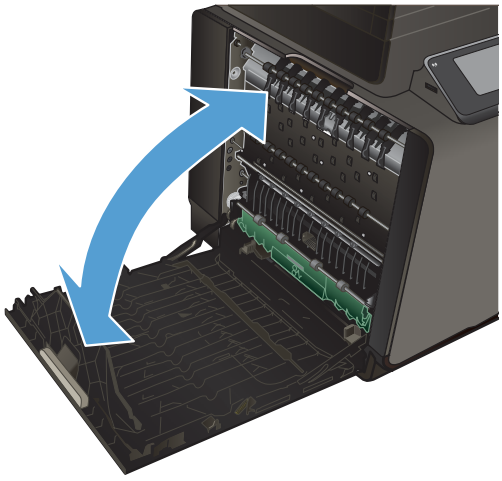

Clear jams in the duplexer

1. Open the left door.

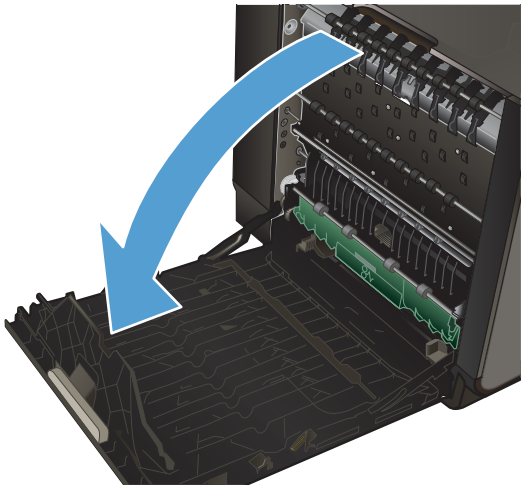

2. If you can see the trailing edge of the sheet, remove the sheet from the product.

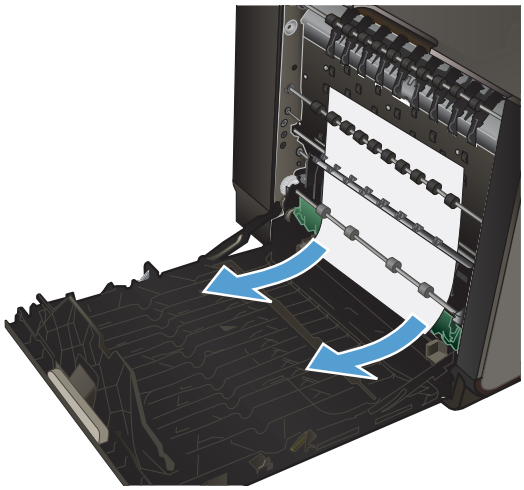

3. If the paper is not visible or accessible, remove the duplexer by pulling it out with both hands. Set the duplexer aside, upright, on a piece of paper to prevent ink spills.

   CAUTION: When pulling out the duplexer, avoid making direct contact with the black cylinder to prevent ink smear on skin or clothes.

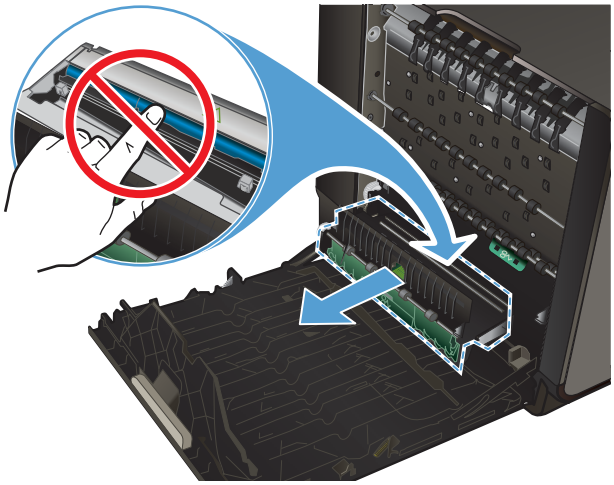

4. Lower the platen by pressing down on the green tab. This will cause the product to try to feed the sheet through the print zone. You might need to gently pull on the sheet if it does not feed. Remove the sheet.

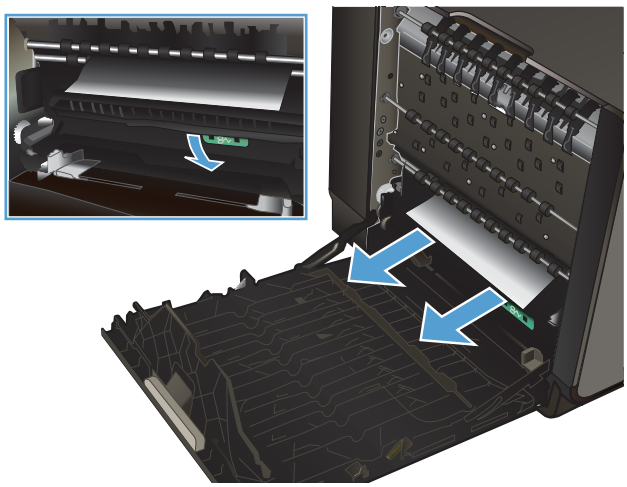

5. Lift the green tab to place the platen back into its operating position.

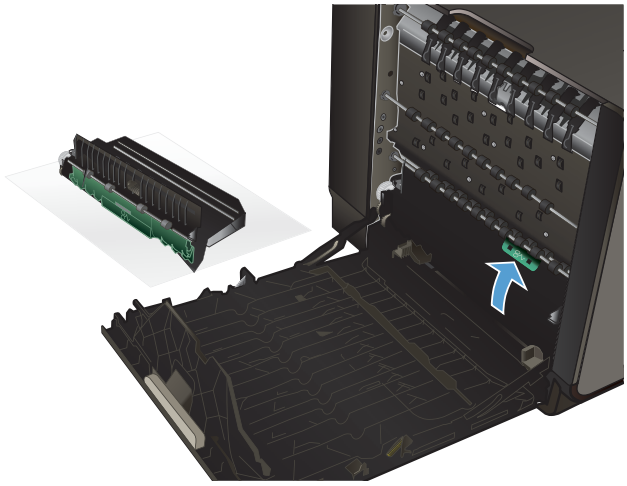

6. Reinstall the duplexer.

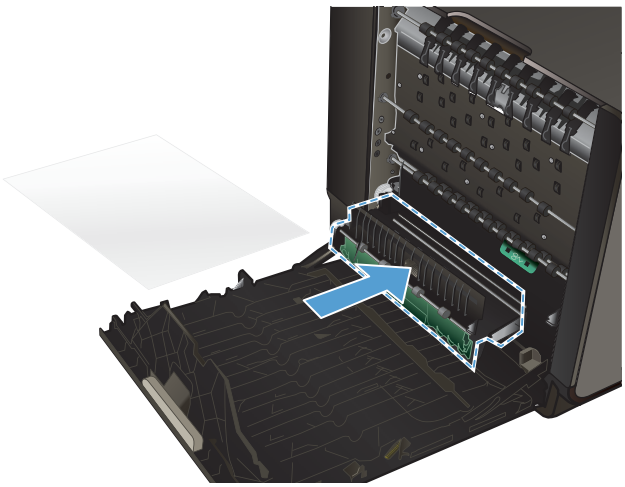

7. Close the left door.

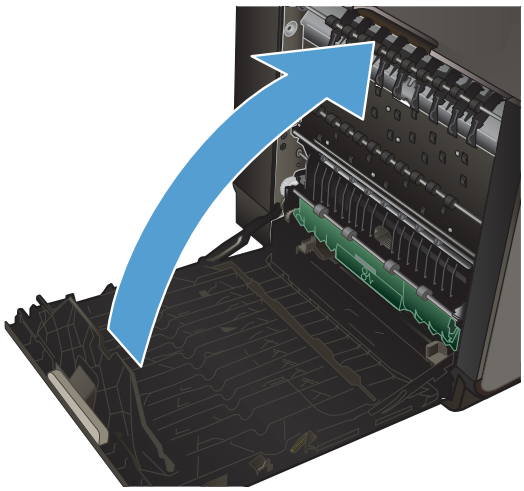

Solve product connectivity problems

Solve USB direct-connect problems

If you have connected the product directly to a computer, check the USB cable.

- Verify that the cable is connected to the computer and to the product.
- Verify that the cable is not longer than 5 m (16.4 ft). Try using a shorter cable.
- Verify that the cable is working correctly by connecting it with another product. Replace the cable if necessary.

Solve network problems

Check the following items to verify that the product is communicating with the network. Before beginning, print a configuration page from the product control panel and locate the product IP address that is listed on this page.

- Poor physical connection
- The computer is using the incorrect IP address for the product
- The computer is unable to communicate with the product
- The product is using incorrect link and duplex settings for the network
- New software programs might be causing compatibility problems
- The computer or workstation might be set up incorrectly
- The product is disabled, or other network settings are incorrect

Poor physical connection

1. Verify that the product is attached to the correct ethernet port using the proper cable.
2. Verify that cable connections are securely attached.
3. Look at the ethernet port on the back of the product, and verify that the amber activity light and the green link-status light are active.
4. If the problem continues, try a different cable or port on the network router, switch, or hub.

The computer is using the incorrect IP address for the product

1. On the computer, open the printer properties and click the **Ports** tab. Verify that the current IP address for the product is selected. The product IP address is listed on the product configuration page or through the control panel.
2. If you installed the product using an HP standard TCP/IP port, select the box labeled **Always print to this printer, even if its IP address changes.**

3. If you installed the product using a Microsoft standard TCP/IP port, use the hostname instead of the IP address.

   If you installed the product using the CD installer, or downloaded the fully-featured installer from the HP Web site, you can view or change the product IP address using the following steps:

   a. Click **Start**.

   b. Click **All Programs**.

   c. Click **HP**.

   d. Click your product.

   e. Click **Update IP Address** to open a utility that reports the known ("previous") IP address for the product and allows you to change the IP address, if necessary.

4. If the IP address is correct, delete the product entry from the list of installed products, and then add it again.

The computer is unable to communicate with the product

1. Test network communication by pinging the product.

   a. Open a command-line prompt on your computer. For Windows, click **Start**, click **Run**, and then type `cmd`.

   b. Type `ping` followed by the IP address for your product.

   c. If the window displays round-trip times, both the network and device are working.

2. If the ping command failed, verify that the network router, hubs, or switches are on, and then verify that the network settings, the product, and the computer are all configured for the same network.

The product is using incorrect link and duplex settings for the network

Hewlett-Packard recommends leaving this setting in automatic mode (the default setting). If you change these settings, you must also change them for your network.

New software programs might be causing compatibility problems

Verify that any new software programs are correctly installed and that they use the correct print driver.

The computer or workstation might be set up incorrectly

1. Check the network drivers, print drivers, and the network redirection.

2. Verify that the operating system is configured correctly.

The product is disabled, or other network settings are incorrect

1. Review the configuration page to check the status of the network protocol. Enable it if necessary.
2. Reconfigure the network settings if necessary.

Solve wireless network problems

- Wireless connectivity checklist
- The control panel displays the message: The wireless feature on this product has been turned off
- The product does not print after the wireless configuration completes
- The product does not print, and the computer has a third-party firewall installed
- The wireless connection does not work after moving the wireless router or product
- Cannot connect more computers to the wireless product
- The wireless product loses communication when connected to a VPN
- The network does not appear in the wireless networks list
- The wireless network is not functioning

Wireless connectivity checklist

- Verify that the product and the wireless router are turned on and have power. Also make sure that the wireless radio in the product is turned on.
- Verify that the service set identifier (SSID) is correct. Print a configuration page to determine the SSID. If you are not sure that the SSID is correct, run the wireless setup again.
- With secured networks, make sure that the security information is correct. If the security information is incorrect, run the wireless setup again.
- If the wireless network is working correctly, try accessing other computers on the wireless network. If the network has Internet access, try connecting to the Internet over another wireless connection.
- Verify that the encryption method (AES or TKIP) is the same for the product as it is for the wireless access point, such as a wireless router (on networks using WPA security).
- Verify that the product is within the range of the wireless network. For most networks, the product must be within 30 m (100 ft) of the wireless access point (wireless router).
- Obstacles do not block the wireless signal. Remove any large metal objects between the access point and the product. Make sure poles, walls, or support columns containing metal or concrete do not separate the product and wireless access point.
- Verify that the product is located away from electronic devices that might interfere with the wireless signal. Many devices can interfere with the wireless signal including motors, cordless phones, security system cameras, other wireless networks, and some Bluetooth devices.

- Verify that the print driver is installed on the computer.
- Verify that you have selected the correct printer port.
- Verify that the computer and product connect to the same wireless network.

The control panel displays the message: The wireless feature on this product has been turned off

1. Touch the Setup button, and then touch the Wireless Setup menu.
2. Touch the Turn Wireless On/Off button, and then touch the On button.

The product does not print after the wireless configuration completes

1. Make sure that the product is turned on and in the ready state.
2. Make sure you are connecting to the correct wireless network.
3. Make sure that the wireless network is working correctly.
   a. On the control panel, touch the Setup button, and then touch the Network Setup menu item.
   b. Select the Print Wireless Network Test item to test the wireless network. The product prints a report with the results.
4. Make sure that the correct port or product is selected.
   a. For products installed *without* the fully-featured installer:
      1. From the list of products on your computer, right-click the name of this product, click **Properties**, and then open the **Ports** tab.
      2. Make sure that the box is checked next to **Virtual printer port for USB**.
   b. If you installed the product using the CD installer, or downloaded the fully-featured installer from the HP Web site, you can view or change the product IP address using the following steps:
      i. Click **Start**.
      ii. Click **All Programs**.
      iii. Click **HP**.
      iv. Click your product.
      v. Click **Update IP Address** to open a utility that reports the known (“previous”) IP address for the product and allows you to change the IP address, if necessary.
5. Make sure that your computer is working correctly. If necessary, restart your computer.

The product does not print, and the computer has a third-party firewall installed

1. Update the firewall with the most recent update available from the manufacturer.
2. If programs request firewall access when you install the product or try to print, make sure that you allow the programs to run.
3. Temporarily turn off the firewall, and then install the wireless product on the computer. Enable the firewall when you have completed the wireless installation.

The wireless connection does not work after moving the wireless router or product

Make sure that the router or product connects to the same network that your computer connects to.

1. From the control panel, touch the Setup button, and then touch the Print Reports menu.
2. Select the Network Configuration Page item to print the report.
3. Compare the service set identifier (SSID) on the configuration report to the SSID in the product configuration for your computer.
4. If the SSIDs are not the same, the devices are not connecting to the same network. Reconfigure the wireless setup for your product.

Cannot connect more computers to the wireless product

1. Make sure that the other computers are within the wireless range and that no obstacles block the signal. For most networks, the wireless range is within 30 m (100 ft) of the wireless access point.
2. Make sure that the product is turned on and in the ready state.
3. Turn off any third-party firewalls on your computer.
4. Make sure that the wireless network is working correctly.
   a. On the product control panel, touch the Setup button, and then touch the Network Setup menu.
   b. Touch the Print Wireless Test Report item to test the wireless network. The product prints a report with the results.

5. Make sure that the correct port or product is selected.

   a. For products installed *without* the fully-featured installer:

      1. From the list of products on your computer, right-click the name of this product, click **Properties**, and then open the **Ports** tab.

      2. Make sure that the box is checked next to **Virtual printer port for USB**.

   b. If you installed the product using the CD installer, or downloaded the fully-featured installer from the HP Web site, you can view or change the product IP address using the following steps:

      i. Click **Start**.

      ii. Click **All Programs**.

      iii. Click **HP**.

      iv. Click your product.

      v. Click **Update IP Address** to open a utility that reports the known ("previous") IP address for the product and allows you to change the IP address, if necessary.

6. Make sure that your computer is working correctly. If necessary, restart your computer.

The wireless product loses communication when connected to a VPN

- Typically, you cannot connect to a VPN and other networks at the same time.

The network does not appear in the wireless networks list

- Make sure that the wireless router is turned on and has power.
- The network might be hidden. However, you can still connect to a hidden network.

The wireless network is not functioning

1. To verify if the network has lost communication, try connecting other devices to the network.
2. Test network communication by pinging the network.

   a. Open a command-line prompt on your computer. For Windows, click **Start**, click **Run**, and then type `cmd`.

   b. Type `ping` followed by the IP address for the wireless router.

   c. If the window displays round-trip times, the network is working.

3. Make sure that the router or product connects to the same network that your computer connects to.

   a. From the product control panel, touch the Setup button, and then touch the Print Reports menu.

   b. Touch the Network Configuration Page item to print the report.

c. Compare the service set identifier (SSID) on the configuration report to the SSID in the product configuration for your computer.

d. If the SSIDs are not the same, the devices are not connecting to the same network. Reconfigure the wireless setup for your product.

Solve copy/scan problems

The following issues are problems that you might encounter when copying documents.

Table 2-8 Solve copy problems

Issue	Solution
The document feeder is not operating correctly.	• If you are unable to load paper fully in the document feeder input tray, the document feeder pick wheel might be stuck. Open the document feeder cover and rotate the exposed gear counterclockwise (when viewed from the front of the product). • If the document feeder is not pulling paper through the unit, the document feeder pick wheel might be stuck. Open the document feeder cover and rotate the exposed gear clockwise (when viewed from the front of the product). • If a control panel message indicates a misfeed, make sure that the paper is loaded in the document feeder input tray correctly. Adjust the paper guides so that they align the paper correctly. • If paper is feeding through the document feeder too slowly, the document feeder motor might have overheated. Avoid using the document feeder for about an hour to let the motor cool, and then try a job from the document feeder. • If the document feeder motor does not rotate, open the document feeder cover and remove any packing material or shipping tape.
No copy came out	• Check the power. Ensure that the power cord is securely connected, and the product is powered on • The product might be busy with another job. Check the control panel display for information about the status of jobs. Wait for any job that is processing to finish. • The product might be jammed. Check for paper jams. • Check the trays. Ensure that the media is loaded.
Copies are blank	• Check the media. The media might not meet HP media specifications. For example, the media is too moist or too rough. • Check the settings. The contrast setting might be set too light. Use the Copy button on the product control panel to create darker copies. • Check the trays. If you are copying from the document feeder, ensure that the originals have been loaded correctly.
Documents are missing or faded	• Check the media. The media might not meet HP media specifications. For example, the media is too moist or too rough. • Check the copy settings. The General Office mode, which produces draft-quality copies, might be responsible for the missing or faded documents. Change to the Presentation or Professional setting.

Table 2-8 Solve copy problems (continued)

Issue	Solution
	To gain access to this setting, from the Home screen, open the following menus: ◦ Copy ◦ Settings ◦ Quality • The accuracy of the copy depends on the quality and size of the original. Use the Copy menu to adjust the brightness of the copy. If the original is too light, copying will not improve the quality of the copy even if you adjust the contrast. • Colored backgrounds might cause images in the foreground to blend into the background, or the background might appear in a different shade. • If you are copying a borderless original, load the original on the scanner glass, not the document feeder. • If you are copying a photo, ensure that you load it on the scanner glass as indicated by the icon on the scan bed.
Size is reduced	• Reduce/enlarge or another copy feature might have been set from the product control panel to reduce the size of the scanned image. Check the settings for the copy job to ensure that they are for normal size. • The HP photo and imaging software settings might be set to reduce the scanned image. Change the settings, if required. For more information, see the onscreen Help for the HP photo and imaging software
Copy quality is poor	Take steps to improve the copy quality. • Use quality originals. • Load the media correctly. If the media is loaded incorrectly, it might skew, causing unclear images. Check the product. • Make sure that the scanner lid is closed properly. • Clean the scanner glass or lid backing, if necessary. • Clean the document feeder, if necessary. Check print quality. • Print a print quality page. Check for nozzle problems that can cause streaks, wrong colors, and other poor quality copy problems. • Recalibrate the scanner. **a.** Turn off the product, and then unplug the power cable. **b.** Wait 15 seconds. **c.** Reattach the power cable.

Table 2-8 Solve copy problems (continued)

Issue	Solution
	d. Make sure that the scanner lid is closed. **e.** Turn on the product, which will calibrate the scanner during the startup process.
Copy defects are apparent	• Vertical white or faded stripes: The media might not meet HP media specifications. For example, the media is too moist or too rough. • Too light or dark: Try adjusting the contrast and copy-quality settings. • Unwanted lines: The scanner glass, lid backing, or frame might need cleaning. • Black dots or streaks: Ink, glue, correction fluid, or an unwanted substance might be on the scanner glass or lid backing. Try cleaning the product. • Copy is slanted or skewed: Ensure that the document feeder input tray is not too full and that the width adjusters are snug against the sides of the media. • Unclear text: Try adjusting the contrast and copy-quality settings. The default enhancement setting might not be suitable for the job. Check the setting and change it to enhance text or photographs, if needed. • Incompletely filled text or graphics: Try adjusting the contrast and copy-quality settings. • Large, black typefaces look splotchy (not smooth): The default enhancement setting might not be suitable for the job. Check the setting and change it to enhance text or photographs, if needed. • Horizontal grainy or white bands in light-gray to medium-gray areas: The default enhancement setting might not be suitable for the job. Check the setting and change it to enhance text or photographs, if needed.
The product prints half a page, and then ejects the paper.	• Check the ink cartridges. Replace the ink cartridges, and then resend the print job to the product.
Paper mismatch	• Check the settings. Verify that the loaded media size and type match the control panel settings.

The following issues are problems that you might encounter when scanning documents.

Table 2-9 Solve scan problems

Issue	Solution
The document feeder is not operating correctly.	• If you are unable to load paper fully in the document feeder input tray, the document feeder pick wheel might be stuck. Open the document feeder cover and rotate the exposed gear counterclockwise (when viewed from the front of the product). • If the document feeder is not pulling paper through the unit, the document feeder pick wheel might be stuck. Open the document feeder cover and rotate the exposed gear clockwise (when viewed from the front of the product). • If a control panel message indicates a misfeed, make sure that the paper is loaded in the document feeder input tray correctly. Adjust the paper guides so that they align the paper correctly. • If paper is feeding through the document feeder too slowly, the document feeder motor might have overheated. Avoid using the document feeder for about an hour to let the motor cool, and then try a job from the document feeder.
Nothing was scanned	• Check the original. Ensure that the original is placed on the scanner glass correctly. • Check the product. The product might be coming out of Sleep mode after a period of inactivity, which delays processing a short while. Wait until the product displays the Home screen. • If you can see the scan bar positioned in the middle or at the right side of the scanner bed, turn off the product, and then turn it back on. The scan bar should return to the left side of the scanner bed.
The scan takes too long	• Check the settings. If you set the resolution too high, the scan job takes longer and results in larger files. To obtain good results when scanning or copying, do not use a resolution that is higher than needed. You can lower the resolution to scan more quickly. • If you acquire an image through a program using the TWAIN driver, you can change the settings so that the original scans in black and white. For more information, see the onscreen Help for the software program. • Check the product status. If you had sent a print or copy job before you tried to scan, the scan starts if the scanner is not busy. However, the printing and scanning processes share memory, which means that the scan might be slower.

Table 2-9 Solve scan problems (continued)

Issue	Solution
Part of the document did not scan or text is missing	Check the original. • Ensure that you loaded the original media correctly. • If you scanned the document from the document feeder, try scanning the document directly from the scanner glass. • Colored backgrounds can cause images in the foreground to blend into the background. Try adjusting the settings before you scan the original, or try enhancing the image after you scan the original. Check the settings. • Ensure that the input media size is large enough for the original that you are scanning. • If you are using the HP photo and imaging software, the default settings in the HP photo and imaging software might be set to automatically perform a task other than the one that you are attempting. See the onscreen Help for the HP photo and imaging software for instructions about changing the properties.
Text cannot be edited	Check the settings. • Ensure that the OCR software is set to edit text. • When you scan the original, ensure that you select a document type that creates editable text. If the text is classified as a graphic, it is not converted to text. • Your OCR program might be linked to a word-processing program that does not perform OCR tasks. For more information about linking programs, see the product software Help. Check the original. • Ensure that you placed the original media correctly on the scanner glass. • The OCR program might not recognize text that is tightly spaced. For example, the OCR program might combine the characters r and n (“rn“) into “m”. • The accuracy of the OCR program depends on the image quality, text size, and structure of the original and the quality of the scan itself. Ensure that the original has good image quality. • Colored backgrounds can cause images in the foreground to blend too much. Try adjusting the settings before you scan the original, or try enhancing the image after you scan the original. If you are performing an OCR operation on an original, any colored text on the original does not scan well, if at all.

Table 2-9 Solve scan problems (continued)

Issue	Solution
Error messages display	“Unable to activate TWAIN source” or “An error occurred while acquiring the image” message appears. • If you are acquiring an image from another device, such as a digital camera or another scanner, ensure that the other device is TWAIN-compliant. Devices that are not TWAIN-compliant do not work with the product software. • Ensure that you have connected the USB device cable to the correct port on the back of your computer. • Verify that the correct TWAIN source is selected. In the software, check the TWAIN source by selecting **Select Scanner** on the **File** menu. Reload the document, and then restart job. • Touch the button, and then reload the remaining documents in the document feeder.

Table 2-9 Solve scan problems (continued)

Issue	Solution
Scanned image quality is poor	The original is a second-generation photo or picture. Reprinted photographs, such as those in newspapers or magazines, are printed by using tiny dots of ink that make an interpretation of the original photograph, which degrades the quality. Often, the ink dots form unwanted patterns that can be detected when the image is scanned or printed or when the image appears on a screen. If the following suggestions do not solve the problem, you might need to use a better-quality version of the original. • To eliminate the patterns, try reducing the size of the image after scanning. • Print the scanned image to see if the quality is better. • Ensure that the resolution and color settings are correct for the type of scan job. • For best results, use the scanner glass for scanning rather than the document feeder. Text or images on the back of a two-sided original appear in the scan. • Two-sided originals can “bleed” text or images from the back to the scan if the originals are printed on media that is too thin or too transparent. The scanned image is skewed (crooked). • The original might have been placed incorrectly. Ensure that you use the media guides when you place the original into the document feeder. The image quality is better when printed. • The image that appears on the screen is not always an accurate representation of the quality of the scan. • Try adjusting your computer monitor settings to use more colors or levels of gray. If using Windows, use **Control Panel** > **Display** to make this adjustment. • Try adjusting the resolution and color settings. The scanned image shows blots, lines, vertical white stripes, or other defects. • If the scanner glass is dirty, the image produced does not have optimum clarity. The defects might be on the original and not a result of the scanning process. Graphics look different from the original. • Scan at a higher resolution.

Table 2-9 Solve scan problems (continued)

Issue	Solution
Scanned image quality is poor (continued)	Take steps to improve the scan quality. • Use the glass to scan rather than the document feeder. • Use high-quality originals. • Place the media correctly. If the media is placed incorrectly on the scanner glass, it might skew, which causes unclear images. • Adjust the software settings according to how you plan to use the scanned page. • Use or make a carrier sheet to protect your originals. • Clean the scanner glass. • Recalibrate the scanner. **a.** Turn off the product, and then unplug the power cable. **b.** Wait 15 seconds. **c.** Reattach the power cable. **d.** Make sure that the scanner lid is closed. **e.** Turn on the product, which will calibrate the scanner during the startup process.
Scan defects are apparent	• Blank pages: Ensure that the original document is placed correctly. Place the original document face down on the flatbed scanner with the upper-left corner located in the lower-right corner of the scanner glass. • Too light or dark: Try adjusting the contrast and copy-quality settings. The original image might be very light or dark or might be printed on colored paper. • Unwanted lines: Ink, glue, correction fluid, or an unwanted substance might be on the scanner glass. Try cleaning the scanner glass. • Black dots or streaks: Ink, glue, correction fluid, or an unwanted substance might be on the scanner glass or lid backing. Try cleaning the product. If it does not work, replace the scanner glass or lid backing. • Copy is slanted or skewed: Ensure that the document feeder input tray is not too full and that the width adjusters are snug against the sides of the media. The defects might be on the original media and not a result of the scanning process. • Unclear text: Try adjusting the settings. Ensure that the resolution and color settings are correct. • Size is reduced: The HP software settings might be set to reduce the size of the scanned image. For more information about changing the settings, see the product software Help.
The product prints half a page, and then ejects the paper	• Check the ink cartridges. Replace the ink cartridges, and then resend the print job to the product.

Table 2-9 Solve scan problems (continued)

Issue	Solution
Paper mismatch	• Check the settings. Verify that the loaded media size and type match the control panel settings.
Scanner bulb does not light during copying, scanning, or faxing,	Contact HP support.

Solve fax problems

Fax reports

In addition to the product reports, the product also features several fax reports.

Fax test report

The user can use the fax test report to check the status of the product and ensure that it is set up appropriately for faxing. Perform this test after the product is set up for faxing.

The fax test performs the following activities:

- Tests the fax hardware.
- Checks whether the fax is connected to an active telephone wall jack.
- Checks whether the phone cord is plugged into the correct port.
- Checks whether the correct type of phone cord is connected to the HP product.
- Checks for a dial tone.
- Checks for an active fax phone line.

The fax test report shows the following information:

- Pass/fail results for each of the fax setup tests
- Current fax settings to help diagnose issues
- Instructions on how to rerun the test

Guidelines for running the fax test

Before running the fax test, ensure that the following guidelines are met:

- The ink cartridges are installed properly.
- Full-size paper is loaded in the main tray.
- The product is set up for faxing according to the particular home or office setup instructions.

Running the fax test

1. On the control panel, open the Setup menu.
2. Open the Tools menu, and then touch the Run Fax Test item. The product displays the status of the test and prints a report.
3. Review the report.
   - If the test passes and you are still having problems faxing, check the fax settings listed in the report to verify the settings are correct. A blank or incorrect fax setting can cause problems faxing.
   - If the test fails, review the report for more information about how to fix any problems found.

Solve fax test failure

If the fax test fails to run, the product might be busy with another task, or it might have an error condition preventing it from running the fax test. If the test fails, check the following possible issues:

1. Verify that the product is set up properly, and connected to a power supply and to the computer. For more information on setting up the product, see the user guide that came with the product.
2. Verify that the product is powered on. If it is not, press the power button.
3. Verify that the ink cartridges are installed correctly and the front door is closed.
4. Verify that the product is not currently busy with another task. Check the display. If the product is busy, wait until it completes the current task and the run the fax test again.
5. Verify that the rear door is attached to the back of the product.
6. Verify that there are no error messages on the control panel display. If there is an error message, resolve the problem and then run the test again.

Fax confirmation report

This report provides printed confirmation that the fax was successfully sent. The default fax confirmation setting is Off. To enable fax confirmation through the control panel, complete the following steps:

1. On the control panel, open the Setup menu.
2. Open the Fax Setup menu, and then open the Advanced Fax Setup menu.
3. Touch the Fax Confirmation item.
4. Select one of the following options:
   - On (Fax Send): Prints a fax confirmation report for every fax you send.
   - On (Fax Receive): Prints a fax confirmation report for every fax you receive.

- On (Send and Receive): Prints a fax confirmation report for every fax you send and receive.
- Off: Does not print a fax confirmation report when you send and receive faxes successfully. This is the default setting.

Fax error report

You can configure the product so that it automatically prints a report when there is an error during transmission or reception. To set up the product to automatically print fax error reports, complete the following steps:

1. On the control panel, open the Setup menu.
2. Open the Fax Setup menu, and then open the Advanced Fax Setup menu.
3. Touch the Fax Error Report item.
4. Select one of the following options:
   - On (Fax Send): Prints whenever a transmission error occurs.
   - On (Fax Receive): Prints whenever a receiving error occurs.
   - On (Send and Receive): Prints whenever a fax error occurs. This is the default setting.
   - Off: Does not print any fax error reports.

Fax last transaction report

The Fax Last Transaction Report prints the details of the last fax transaction that occurred. Details include the fax number, number of pages, and the fax status. To print the last fax transaction report, complete the following steps:

1. On the control panel, open the Setup menu.
2. Open the Fax Setup menu, and then open the Fax Reports menu.
3. Touch the Last Transaction item.

Fax log

The fax log lists the last 30 transactions and the results. The report includes faxes that have been sent from the product control panel and all faxes that have been received. Each entry in the log contains the following information:

- Transmission date and time
- Type (whether received or sent)
- Fax number
- Duration
- Number of pages
- Result (status) of transmission

To print the fax log from the product control panel, complete the following steps:

1. On the control panel, open the Setup menu.
2. Open the Fax Setup menu, and then open the Fax Reports menu.
3. Touch the Fax Log item.

Caller ID report

Use the following procedure to print a history of caller ID fax numbers. If there are no calls in the ID history, the history could have been cleared during a power cycle or the user has not signed up for the caller ID service with the user's phone company.

1. On the control panel, open the Setup menu.
2. Open the Fax Setup menu, and then open the Fax Reports menu.
3. Touch the Caller ID Report item.

Possible fax issues

The following issues are the faxing issues that you might encounter, and the associated troubleshooting actions.

Table 2-10 Possible fax issues

Issue	Solution
The fax test failed.	If you ran a fax test and the test failed, review the report for basic information about the error. For more detailed information, check the report to see which part of the test failed, and then review the appropriate topic in this section for a solution. The “Fax Hardware Test” failed. • Power off the product by using the power button located on the product control panel, and then unplug the power cord from the back of the product. After a few seconds, plug the power cord in again, and then power on the product. Run the test again. If the test fails again, continue reviewing the troubleshooting information in this section. • Try to send or receive a test fax. If you can send or receive a fax successfully, there might not be a problem. • If you are running the test from the Fax Setup Wizard (Windows) or HP Fax Setup Utility (Mac OS), ensure that the product is not busy completing another task, such as receiving a fax or making a copy. Check the display for a message indicating that the product is busy. If the product is busy, wait until the job is finished and the product is in the idle state before running the test. • Ensure that you use the phone cord that came with the product. If you do not use the supplied phone cord to connect the product to the telephone wall jack, you might not be able to send or receive faxes. After you plug in the phone cord that came with the product, run the fax test again. You might need to connect the supplied phone cord to the adapter provided for your country/region. • If you are using a phone-line splitter, this can cause faxing problems. A splitter is a two-cord connector that plugs into a telephone wall jack. Try removing the splitter and connecting the product directly to the telephone wall jack. • After you resolve any problem that is found, run the fax test again to check if the product passes the test and is ready for faxing. If the Fax Hardware Test continues to fail and you experience problems faxing, contact HP Support at www.hp.com/support. If prompted, choose your country/region, and then click **Contact HP** for information on calling for technical support. The “Fax Connected to Active Telephone Wall Jack” test failed. • Check the connection between the telephone wall jack and the product to ensure that the phone cord is secure. • Ensure that you use the phone cord that came with the product. If you do not use the supplied phone cord to connect the product to the telephone wall jack, you might not be able to send or receive faxes. After you plug in the phone cord that came with the product, run the fax test again. You might need to connect the supplied phone cord to the adapter provided for your country/region. • Ensure that you have correctly connected the product to the telephone wall jack. Connect one end of the phone cord supplied with the product to your telephone wall jack and the other end to the port labeled 1-LINE at the back of the product. • Try connecting a working phone and phone cord to the telephone wall jack that you are using for the product and check for dial tone. If you do not hear a dial tone, contact your telephone company and have them check the line. • Try sending or receiving a test fax. If you can do that successfully, there might not be a problem. • After you resolve any problem that is found, run the fax test again to check if the product passes the test and is ready for faxing.

Table 2-10 Possible fax issues (continued)

Issue	Solution
The fax test failed. (continued)	The “Phone Cord Connected to Correct Port on Fax” test failed. 1. Connect one end of the phone cord supplied with the product to your telephone wall jack and the other end to the port labeled 1-LINE at the back of the product. 2. After you have connected the phone cord to the port labeled 1-LINE, run the fax test again to check if the product passes the test and is ready for faxing. 3. Try to send or receive a test fax. ◦ Make sure you use the phone cord that came with the product. If you do not use the supplied phone cord to connect from the telephone wall jack to the product, you might not be able to send or receive faxes. After you plug in the phone cord that came with the product, run the fax test again. ◦ If you are using a phone splitter, this can cause faxing problems. (A splitter is a two-cord connector that plugs into a telephone wall jack.) Try removing the splitter and connecting the product directly to the telephone wall jack. The "Using Correct Type of Phone Cord with Fax" test failed. • Make sure you used the phone cord supplied in the box with the product to connect to the telephone wall jack. One end of the phone cord should be connected to the port labeled 1-LINE on the back of the product, and the other end to your telephone wall jack. If the phone cord that came with the product is not long enough, use a coupler to extend the length. • Check the connection between the telephone wall jack and the product to ensure that the phone cord is secure. • Ensure that you use the phone cord that came with the product. If you do not use the supplied phone cord to connect the product to the telephone wall jack, you might not be able to send or receive faxes. After you plug in the phone cord that came with the product, run the fax test again. You might need to connect the supplied phone cord to the adapter provided for your country/region. • If you are using a phone splitter, this can cause faxing problems. A splitter is a two-cord connector that plugs into a telephone wall jack. Try removing the splitter and connecting the product directly to the telephone wall jack.

Table 2-10 Possible fax issues (continued)

Issue	Solution
The fax test failed. (continued)	The “Dial Tone Detection” test failed. Other equipment, which uses the same phone line as the product, might be causing the test to fail. To determine if the other equipment is causing a problem, disconnect everything from the phone line, and then run the test again. If the product passes the Dial Tone Detection Test without the other equipment connected, then one or more pieces of the equipment is causing problems. Try adding them back one at a time and rerunning the test each time, until you identify which piece of equipment is causing the problem. • Try connecting a working phone and phone cord to the telephone wall jack that you are using for the product and check for dial tone. If you do not hear a dial tone, contact your telephone company and have them check the line. • Ensure that you have correctly connected the product to the telephone wall jack. • Connect one end of the phone cord supplied with the product to your telephone wall jack and the other end to the port labeled 1-LINE at the back of the product. • If your telephone system is not using a standard dial tone, such as the one used by some PBX systems, the test might fail. This will not cause a problem in sending or receiving faxes. Try sending or receiving a test fax. • Check to ensure that the country/region setting is set appropriately. If the country/region setting is not set or is set incorrectly, the test might fail, and you might have problems in sending and receiving faxes. • Ensure that you connect the product to an analog phone line or you will not be able to send or receive faxes. To check if your phone line is digital, connect a regular analog phone to the line and listen for a dial tone. If you do not hear a normal sounding dial tone, it might be a phone line set up for digital phones. Connect the product to an analog phone line and try sending or receiving a fax. • Ensure that you use the phone cord that came with the product. If you do not use the supplied phone cord to connect the product to the telephone wall jack, you might not be able to send or receive faxes. After you plug in the phone cord, run the fax test again. • After you resolve any problem that is found, run the fax test again to check if the product passes the test and is ready for faxing. If the dial tone detection test continues to fail, contact your telephone company and have them check the phone line.

Table 2-10 Possible fax issues (continued)

Issue	Solution
The fax test failed. (continued)	The “Fax Line Condition” test failed. • Ensure that you connect the product to an analog phone line or you will not be able to send or receive faxes. To check if your phone line is digital, connect a regular analog phone to the line and listen for a dial tone. If you do not hear a normal sounding dial tone, it might be a phone line set up for digital phones. Connect the product to an analog phone line and try sending or receiving a fax. • Check the connection between the telephone wall jack and the product to make sure that the phone cord is secure. • Ensure that you have correctly connected the product to the telephone wall jack. • Connect one end of the phone cord supplied with the product to your telephone wall jack and the other end to the port labeled 1-LINE at the back of the product. You might need to connect the supplied phone cord to the adapter provided for your country/region. • Other equipment, which uses the same phone line as the product, might be causing the test to fail. To determine if the other equipment is causing a problem, disconnect everything from the phone line, and then run the test again. • If the Fax Line Condition Test passes without the other equipment, then one or more pieces of the equipment is causing problems; try adding them back one at a time and rerunning the test each time, until you identify which piece of equipment is causing the problem. • If the Fax Line Condition Test fails even after removing the other connected equipment, connect the product to a working phone line and continue reviewing the troubleshooting information in this section. • If you are using a phone splitter, this can cause faxing problems. A splitter is a two-cord connector that plugs into a telephone wall jack. Try removing the splitter and connecting the product directly to the telephone wall jack. • Ensure that you use the phone cord that came with the product. If you do not use the supplied phone cord to connect the product to the telephone wall jack, you might not be able to send or receive faxes. After you plug in the phone cord that came with the product, run the fax test again. • After you resolve any problem that is found, run the fax test again to check if the product passes the test and is ready for faxing. If the Fax Line Condition test continues to fail and you experience problems faxing, contact your telephone company and have them check the phone line.

Table 2-10 Possible fax issues (continued)

Issue	Solution
The display always shows **Phone Off Hook**.	• You are using the wrong type of phone cord. Ensure that you are using the phone cord that came with the product to connect the product to your phone line. If the phone cord that came with the product is not long enough, you can use a coupler to extend the length. You can purchase a coupler at an electronics store that carries phone accessories. You will also need another phone cord, which can be a standard phone cord that you might already have in your home or office. • Other equipment that uses the same phone line as the product might be in use. Ensure that the extension phones—phones on the same phone line, but not connected to the product—or other equipment are not in use or off the hook. For example, you cannot use the product for sending a fax if an extension phone is off the hook, or if you are using a computer dial-up modem to send e-mail or access the Internet.
The product is having problems sending and receiving faxes.	• Ensure that the product is powered on. Look at the display on the product. If the display is blank and the Power light is not lit, the product is powered off. Check if the power cord is firmly connected to the product and plugged into a power outlet. Press the power button to power on the product. • After powering on the product, HP recommends that you wait five minutes before sending or receiving a fax. The product cannot send or receive faxes while it is initializing after being powered on. • Connect one end of the phone cord supplied with the product to your telephone wall jack and the other end to the port labeled 1-LINE at the back of the product. • If the phone cord that came with the product is not long enough, you can use a coupler to extend the length. You can purchase a coupler at an electronics store that carries phone accessories. You will also need another phone cord, which can be a standard phone cord that you might already have in your home or office. • Try connecting a working phone and phone cord to the telephone wall jack that you are using for the product and check for a dial tone. If you do not hear a dial tone, call your local telephone company for service. • Other equipment, which uses the same phone line as the product, might be in use. For example, you cannot use the product for faxing if an extension phone is off the hook, or if you are using a computer dial-up modem to send an e-mail or access the Internet. • Check to see if another process has caused an error. Check the control panel display or your computer for an error message that provides information about the problem and its resolution. If there is an error, the product will not send or receive a fax until the error condition is resolved. • The phone line connection might be noisy. Phone lines with poor sound quality (noise) can cause faxing problems. Check the sound quality of the phone line by plugging a phone into the telephone wall jack and listening for static or other noise. If you hear noise, turn Error Correction Mode (ECM) off and try faxing again. For information about changing ECM, see the onscreen Help. If the problem persists, contact your telephone company.

Table 2-10 Possible fax issues (continued)

Issue	Solution
The product is having problems sending and receiving faxes. (continued)	• If you are using a digital subscriber line (DSL) service, make sure that you have a DSL filter connected or you will not be able to fax successfully. • Ensure that the product is not connected to a telephone wall jack that is set up for digital phones. To check if your phone line is digital, connect a regular analog phone to the line and listen for a dial tone. If you do not hear a normal sounding dial tone, it might be a phone line set up for digital phones. • If you are using a private branch exchange (PBX) or an integrated services digital network (ISDN) converter/terminal adapter, make sure that the product is connected to the correct port and the terminal adapter is set to the correct switch type for your country/region, if possible. • If the product shares the same phone line with a DSL service, the DSL modem might not be properly grounded. If the DSL modem is not properly grounded, it can create noise on the phone line. Phone lines with poor sound quality (noise) can cause faxing problems. You can check the sound quality of the phone line by plugging a phone into the telephone wall jack and listening for static or other noise. If you hear noise, power off your DSL modem for at least 15 minutes, after which, power on the DSL modem again and listen to the dial tone. If the phone line is still noisy, contact your telephone company. For information on how to power off your DSL modem, contact your DSL provider for support. • If you are using a phone splitter, this can cause faxing problems. (A splitter is a two-cord connector that plugs into a telephone wall jack.) Try removing the splitter and connecting the product directly to the telephone wall jack.
The product is having problems sending a manual fax.	• Ensure that the telephone you use to initiate the fax call is connected directly to the product. To send a fax manually, the telephone must be connected directly to the port labeled 2-EXT on the product. • If you are sending a fax manually from a phone that is connected directly to the product, you must use the keypad on the telephone to send the fax. You cannot use the keypad on the product control panel.

Table 2-10 Possible fax issues (continued)

Issue	Solution

The product cannot receive faxes, but can send faxes.	• If you are not using a distinctive ring service, check to make sure that the Distinctive Ring feature on the product is set to All Rings
	• If Auto Answer is set to Off, you will need to receive faxes manually; otherwise, the product will not receive the fax.
	• If you have a voice mail service on the same phone number that you use for fax calls, you must receive faxes manually, not automatically. This means that you must be available to respond in person to incoming fax calls.
	• If you have a computer dial-up modem on the same phone line as the product, check to make sure that the software that came with your modem is not set to receive faxes automatically. Modems that are set up to receive faxes automatically take over the phone line to receive all incoming faxes. As a result, the product doesn't receive fax calls.
	• If you have an answering machine on the same phone line with the product, you might have one of the following problems:
	  ◦ Your answering machine might not be set up properly with the product.
	  ◦ Your outgoing message might be too long or too loud to allow the product to detect fax tones, and the sending fax machine might disconnect.
	  ◦ Your answering machine might not have enough quiet time after your outgoing message to allow the product to detect fax tones. This problem is most common with digital answering machines.
	• The following actions might help solve the above stated problems.
	  ◦ When you have an answering machine on the phone line that you use for fax calls, try connecting the answering machine directly to the product.
	  ◦ Ensure that the product is set to receive faxes automatically. For information on setting up the product to receive faxes automatically, see the section on receiving a fax.
	  ◦ Ensure that the Rings to Answer setting is set to a greater number of rings than the answering machine.
	  ◦ Disconnect the answering machine and then try receiving a fax. If faxing is successful without the answering machine, the answering machine might be causing the problem.
	  ◦ Reconnect the answering machine and record your outgoing message again. Record a message that is approximately 10 seconds in duration. Speak slowly and at a low volume when recording your message. Leave at least 5 seconds of silence at the end of the voice message. There should

Table 2-10 Possible fax issues (continued)

Issue	Solution
	be no background noise when recording this silent time. Try to receive a fax again. • If the product shares the same phone line with other types of phone equipment, such as an answering machine, a computer dial-up modem, or a multi-port switch box, the fax signal level might be reduced. The signal level can also get reduced if you use a splitter or connect extra cables to extend the length of your phone. A reduced fax signal can cause problems during fax reception. To find out if other equipment is causing a problem, disconnect everything except the product from the phone line, and then try to receive a fax. If you can receive faxes successfully without the other equipment connected, one or more pieces of the other connected equipment is causing problems; try adding them back one at a time and receiving a fax each time, until you identify which equipment is causing the problem. • If you have a special ring pattern for your fax phone number (using a distinctive ring service through your telephone company), make sure that the Distinctive Ring feature on the product is set to match.
The product cannot send faxes, but can receive faxes.	• The product might be dialing too fast or too soon. You might need to insert some pauses in the number sequence. For example, if you need to access an outside line before dialing the phone number, insert a pause following the access number. If your number is 95555555, and 9 accesses an outside line, you might insert pauses as follows: 9-555-5555. To enter a pause in the fax number you are typing, touch Redial/Pause, or touch Space (#) repeatedly, until a dash (-) appears on the display. • You can also send the fax by using monitor dialing. This enables you to listen to the phone line as you dial. You can set the pace of your dialing and respond to prompts as you dial. • The number you entered when sending the fax is not in the proper format or the receiving fax machine is having problems. To check this, try calling the fax number from a telephone and listen for fax tones. If you cannot hear fax tones, the receiving fax machine might not be powered on or connected, or a voice mail service could be interfering with the recipient's phone line. You can also ask the recipient to check the receiving fax machine for any problems.
Fax tones are recorded on the answering machine.	• When you have an answering machine on the same phone line that you use for fax calls, try connecting the answering machine directly to the product. If you do not connect the answering machine as recommended, fax tones might be recorded on your answering machine. • Ensure that the product is set to receive faxes automatically and that the Rings to Answer setting is correct. The number of rings to answer for the product should be greater than the number of rings to answer for the answering machine. If the answering machine and the product are set to the same number of rings to answer, both devices answer the call and fax tones are recorded on the answering machine. • Set your answering machine to a low number of rings and the product to answer in the maximum number of rings supported. (The maximum number of rings varies by country/region.) In this setup, the answering machine answers the call and the product monitors the line. If the product detects fax tones, the product receives the fax. If the call is a voice call, the answering machine records the incoming message.

Table 2-10 Possible fax issues (continued)

Issue	Solution
The phone cord that came with the product is not long enough.	• If the phone cord that came with the product is not long enough, you can use a coupler to extend the length. You can purchase a coupler at an electronics store that carries phone accessories. You will also need another phone cord, which can be a standard phone cord that you might already have in your home or office. • To extend your phone cord, complete the following steps. 1. Using the phone cord supplied with the product, connect one end to the coupler, then connect the other end to the port labeled 1-LINE on the back of the product. 2. Connect another phone cord to the open port on the coupler and the telephone wall jack.
Color faxes do not print	• The Incoming Fax Printing option might be turned off. To print color faxes, make sure that the Incoming Fax Printing option in the product control panel is turned on.
The computer cannot receive faxes (Fax to PC or Fax to Mac)	• The computer selected to receive faxes might be turned off. Ensure that the computer selected to receive faxes is switched on at all times. • Different computers might be configured for setup and receiving faxes and one of them might be switched off. If the computer receiving faxes is different from the one used for setup, both computers should be switched on at all times. • Fax to PC or Fax to Mac might not be activated or the computer might not be configured to receive faxes. Activate Fax to PC or Fax to Mac and make sure that the computer is configured to receive faxes.

Solve memory device problems

Table 2-11 Solve memory device problems

Issue	Solution
The product cannot read the memory device.	Check the memory device. • Ensure that the memory device is one of the supported types. • Some memory devices have a switch that controls how they can be used. Ensure that the switch is set so that the memory device can be read. • Inspect the ends of the memory device for dirt or material that closes a hole or spoils a metal contact. Clean the contacts with a lint-free cloth and small amounts of isopropyl alcohol. • Ensure that the memory device is working correctly by testing it with other devices. Check the memory device slot. • Ensure that the memory device is fully inserted into the correct slot. • Remove the memory card (when the light is not blinking) and shine a flashlight into the empty slot. See if any of the small pins inside are bent. When the product is off, you can straighten slightly bent pins by using the tip of a thin, retracted ballpoint pen. If a pin has bent in such a way that it touches another pin, replace the memory card reader or have the product serviced. • Ensure that only one memory device has been inserted at a time in the slots. An error message should appear on the control-panel display if more than one memory device is inserted.
The product cannot read photos on the memory device.	Check the memory device. The memory device might be corrupt.

Index

B
bin, output
  jams, clearing 109

C
calibration period 3
cautions iii
cleaning
  paper path 86
CO operations 37
color
  adjusting 75
connectivity
  solving problems 113
conventions, document iii
copying
  quality, adjusting 90
  sequence 36
current control, fax line 39

D
data path
  fax 38
defaults, restoring 42
document conventions iii
document feeder
  jams 100

E
end of print job period 5
engine control system
  operations 6

F
factory-set defaults, restoring 42
fax
  card 38
  data path 38
  factory-set defaults, restoring 42
  flash memory storage 39
  functions 37
  line current control 39
  operations 37
  page storage 39
  PSTN operations 37
  ring detect 39
  safety isolation 38
  safety protection circuitry 38
  subsystem 38
fax card
  CODEC 38
  DSP 38
  fax subsystem 38
  regional versions 38
  ring detect 39
fax security
  security features, computer 37
  security features, network 37
fax subsystem
  fax card 38
  operations 37
flash memory, fax 39
flowcharts
  troubleshooting 50

I
ink cartridges
  checking for damage 88

J
jams
  causes of 99
  document feeder, clearing 100
  locating 99
  output bin, clearing 109
  paper path, clearing 108

L
left door
  jams, clearing 108
line current control, fax 39

M
memory
  flash, fax 39

N
networks
  security features 37
notes iii

O
operation sequence 3
operations
  engine control system 6
  fax 37
  fax card in subsystem 38
  fax subsystem 37
  fax, PSTN 37
  paper-handling system 16
  PSTN 37
  scanner system 35
output bin
  jams, clearing 109

P
paper
  jams 99
  paper-handling system operations 16
  selecting 74
paper path
  jams, clearing 108

paper pickup problems
solving 93
paper type
changing 74
paper-handling system
sensors 16
power
fax line current control 39
power-on
scanner sequence 35
print preparation period 4
print quality
improving 69, 74
print quality page
interpreting 78
printing 78
printing period 4
product
fax, functions 37
PSTN operations 37

R
regional versions
fax card 38
restoring factory-set defaults 42
ring detect
fax card 39
RING operations 37

S
safety
-protection circuitry, fax 38
isolation, fax 38
scanner
glass cleaning 90
security features
computer 37
network 37
sensors
paper-handling operations 16
servicing operations 3
settings
factory-set defaults, restoring 42
solving
network problems 113
USB direct-connect problems 113
startup period 3
storing
fax pages in flash memory 39

T
theory of operations
engine control system 6
paper-handling system 16
TIP operations 37
tips iii
Tray 1
jams, clearing 102
tray 1
pickup-and-feed system operations 16
Tray 2
jams, clearing 105, 106
paper-handling operations 16
trays
jams, clearing 105, 106
paper-handling system operations 16
troubleshooting
flowchart 50
jams 99
network problems 113
paper feed problems 92
USB direct-connect problems 113

W
warnings iii

© 2013 Hewlett-Packard Development Company, L.P.

www.hp.com

CN598-90006