brother®

# USER'S GUIDE

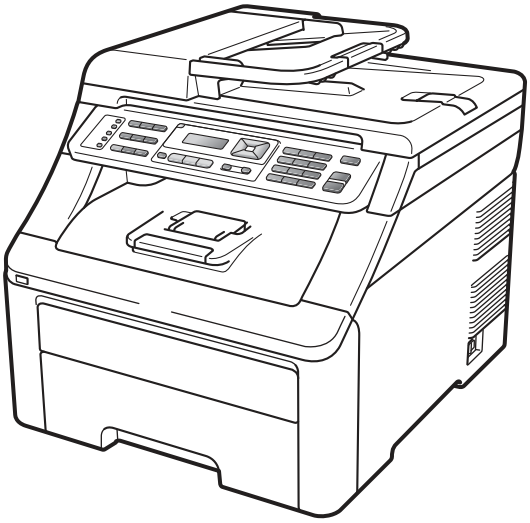

## MFC-9125CN
## MFC-9325CW

Version 0

USA/CAN

## If you need to call Customer Service

**Please complete the following information for future reference:**

**Model Number: MFC-9125CN and MFC-9325CW**
**(Circle your model number)**

**Serial Number: [1]** _____

**Date of Purchase:** _____

**Place of Purchase:** _____

**[1] The serial number is on the back of the unit. Retain this User's Guide with your sales receipt as a permanent record of your purchase, in the event of theft, fire or warranty service.**

**Register your product on-line at**

**http://www.brother.com/registration/**

By registering your product with Brother, you will be recorded as the original owner of the product. Your registration with Brother:

- may serve as confirmation of the purchase date of your product should you lose your receipt;
- may support an insurance claim by you in the event of product loss covered by insurance; and,
- will help us notify you of enhancements to your product and special offers.

The most convenient and efficient way to register your new product is online at http://www.brother.com/registration/

© 2011 Brother Industries, Ltd.

# Brother numbers

**IMPORTANT**

For technical help, you must call the country where you bought the machine. Calls must be made ***from within*** that country.

## Register your product

By registering your product with Brother International Corporation, you will be recorded as the original owner of the product. Your registration with Brother:

- may serve as confirmation of the purchase date of your product should you lose your receipt;
- may support an insurance claim by you in the event of product loss covered by insurance; and,
- will help us notify you of enhancements to your product and special offers.

Please complete and fax the Brother Warranty Registration and Test Sheet or, for your convenience and most efficient way to register your new product, register on-line at

**http://www.brother.com/registration/**

## FAQs (frequently asked questions)

The Brother Solutions Center is our one-stop resource for all your Fax Machine/Multi-Function Center needs. You can download the latest software and utilities and read FAQs and troubleshooting tips to learn how to get the most from your Brother product.

**http://solutions.brother.com/**

**Note**

You can check here for Brother driver updates.

To keep your machine's performance up to date, check here for the latest firmware upgrade (Windows®).

## For Customer Service

| | |
|---|---|
| **In USA:** | 1-877-BROTHER (1-877-276-8437) |
| | 1-901-379-1215 (fax) |
| **In Canada:** | 1-877-BROTHER |
| | (514) 685-4898 (fax) |

### Service Center Locator (USA only)

For the location of a Brother authorized service center, call 1-877-BROTHER (1-877-276-8437).

### Service Center Locations (Canada only)

For the location of a Brother authorized service center, call 1-877-BROTHER.

# Ordering accessories and supplies

For best quality results use only genuine Brother accessories, which are available at most Brother retailers. If you cannot find the accessory you need and you have a Visa, MasterCard, Discover, or American Express credit card, you can order accessories directly from Brother. (You can visit us online for a complete selection of the Brother accessories and supplies that are available for purchase.)

**Note**

In Canada, only Visa and MasterCard are accepted.

**In USA:** 1-877-552-MALL (1-877-552-6255)

1-800-947-1445 (fax)

**http://www.brothermall.com/**

**In Canada:** 1-877-BROTHER

**http://www.brother.ca/**

| Description | Item |
|---|---|
| Toner Cartridge <Black> | TN-210BK (Approx. 2,200 pages) [1 2] |
| Toner Cartridge <Cyan> | TN-210C (Approx. 1,400 pages) [1 2] |
| Toner Cartridge <Magenta> | TN-210M (Approx. 1,400 pages) [1 2] |
| Toner Cartridge <Yellow> | TN-210Y (Approx. 1,400 pages) [1 2] |
| 4 pcs. Drum Unit | DR-210CL (Approx. 15,000 pages ea. drum unit) [1 3 4] |
| 1 pc. Drum Unit <Black> | DR-210CL-BK (Approx. 15,000 pages ea.) [1 3 4] |
| 1 pc. Drum Unit <Color> | DR-210CL-CMY (Approx. 15,000 pages ea.) [1 3 4] |
| Waste Toner Box | WT-200CL (Approx. 50,000 pages) [1] |
| Belt Unit | BU-200CL (Approx. 50,000 pages) [1] |
| Telephone Line Cord | LG3077001 |
| User's Guide | LS8782001 (English for USA and Canada) |
| | LS8782002 (French for Canada) |
| Quick Setup Guide | (MFC-9125CN) LS8783001 (English for USA and Canada)<br>(MFC-9325CW) LS8795001 (English for USA and Canada) |
| | (MFC-9125CN) LS8783002 (French for Canada)<br>(MFC-9325CW) LS8795002 (French for Canada) |

1 A4 or Letter size single-sided pages.

2 Approx. cartridge yield is declared in accordance with ISO/IEC 19798.

3 1 page per job.

4 Drum life is approximate and may vary by type of use.

# Notice - Disclaimer of Warranties (USA and Canada)

BROTHER'S LICENSOR(S), AND THEIR DIRECTORS, OFFICERS, EMPLOYEES OR AGENTS (COLLECTIVELY BROTHER'S LICENSOR) MAKE NO WARRANTIES, EXPRESS OR IMPLIED, INCLUDING WITHOUT LIMITATION THE IMPLIED WARRANTIES OF MERCHANTABILITY AND FITNESS FOR A PARTICULAR PURPOSE, REGARDING THE SOFTWARE. BROTHER'S LICENSOR(S) DOES NOT WARRANT, GUARANTEE OR MAKE ANY REPRESENTATIONS REGARDING THE USE OR THE RESULTS OF THE USE OF THE SOFTWARE IN TERMS OF ITS CORRECTNESS, ACCURACY, RELIABILITY, CURRENTNESS OR OTHERWISE. THE ENTIRE RISK AS TO THE RESULTS AND PERFORMANCE OF THE SOFTWARE IS ASSUMED BY YOU. THE EXCLUSION OF IMPLIED WARRANTIES IS NOT PERMITTED BY SOME STATES IN THE USA AND SOME PROVINCES IN CANADA. THE ABOVE EXCLUSION MAY NOT APPLY TO YOU.

IN NO EVENT WILL BROTHER'S LICENSOR(S) BE LIABLE TO YOU FOR ANY CONSEQUENTIAL, INCIDENTAL OR INDIRECT DAMAGES (INCLUDING DAMAGES FOR LOSS OF BUSINESS PROFITS, BUSINESS INTERRUPTION, LOSS OF BUSINESS INFORMATION, AND THE LIKE) ARISING OUT OF THE USE OR INABILITY TO USE THE SOFTWARE EVEN IF BROTHER'S LICENSOR HAS BEEN ADVISED OF THE POSSIBILITY OF SUCH DAMAGES. BECAUSE SOME STATES IN THE USA AND SOME PROVINCES IN CANADA DO NOT ALLOW THE EXCLUSION OR LIMITATION OF LIABILITY FOR CONSEQUENTIAL OR INCIDENTAL DAMAGES, THE ABOVE LIMITATIONS MAY NOT APPLY TO YOU. IN ANY EVENT BROTHER'S LICENSOR'S LIABILITY TO YOU FOR ACTUAL DAMAGES FROM ANY CAUSE WHATSOEVER, AND REGARDLESS OF THE FORM OF THE ACTION (WHETHER IN CONTRACT, TORT (INCLUDING NEGLIGENCE), PRODUCT LIABILITY OR OTHERWISE), WILL BE LIMITED TO $50.

# Compilation and Publication Notice

Under the supervision of Brother Industries Ltd., this manual has been compiled and published, covering the latest product descriptions and specifications.

The contents of this manual and the specifications of this product are subject to change without notice.

Brother reserves the right to make changes without notice in the specifications and materials contained herein and shall not be responsible for any damages (including consequential) caused by reliance on the materials presented, including but not limited to typographical and other errors relating to the publication.

# Brother™ Digital Color One-Year Limited Warranty and Replacement Service (USA Only)

**Who is covered:**

- This limited warranty ("warranty") is given only to the original end-user/retail purchaser (referred to in this warranty as "Original Purchaser") of the accompanying product, consumables and accessories (collectively referred to in this warranty as "this Product").
- If you purchased a product from someone other than an authorized Brother reseller in the United States or if the product was used (including but not limited to floor models or refurbished product by someone other than Brother), prior to your purchase you are not the Original Purchaser and the product that you purchased is not covered by this warranty.

**What is covered:**

- This Product includes a Machine and Consumable and Accessory Items. Consumable and Accessory Items include but are not limited to Toner Cartridges, Drum Units, Belt Unit, and Waste Toner Box.
- Except as otherwise provided herein, Brother warrants that the Machine and the accompanying Consumable and Accessory Items will be free from defects in materials and workmanship, when used under normal conditions.
- This warranty applies only to products purchased and used in the United States. For products purchased in, but used outside, the United States, this warranty covers only warranty service within the United States (and does not include shipping outside the United States).

**What is the length of the Warranty Periods:**

- Machines: one year from the original purchase date.
- Accompanying Consumable and Accessory Items: 90 days from the original purchase date or the rated life of consumable, whichever comes first.

**What is NOT covered:**

This warranty does not cover:

1. Physical damage to this Product;
2. Damage caused by improper installation, improper or abnormal use, misuse, neglect or accident (including but not limited to transporting this Product without the proper preparation and/or packaging);
3. Damage caused by another device or software used with this Product (including but not limited to damage resulting from use of non Brother™-brand parts and Consumable and Accessory Items);
4. Consumable and Accessory Items that expired in accordance with a rated life;
5. Problems arising from other than defects in materials or workmanship; and,
6. Normal Periodic Maintenance Items, such as Paper Feeding Kit and Fuser Unit.

This limited warranty is VOID if this Product has been altered or modified in any way (including but not limited to attempted warranty repair without authorization from Brother and/or alteration/removal of the serial number).

**What to do if you think your Product is eligible for warranty service:**

Report your issue to either our Customer Service Hotline at 1-877-BROTHER (1-877-276-8437) or to a Brother Authorized Service Center **within the applicable warranty period**. Supply Brother or the Brother Authorized Service Center with a copy of your dated bill of sale showing that this Product was purchased within the U.S. For the name of local Brother Authorized Service Center(s), call 1-877-BROTHER (1-877-276-8437) or visit www.brother-usa.com.

**What Brother will ask you to do:**

After contacting Brother or a Brother Authorized Service Center, you may be required to deliver (by hand if you prefer) or send the Product properly packaged, freight prepaid, to the Authorized Service Center together with a photocopy of your bill of sale. **You are responsible for the cost of shipping, packing product, and insurance (if you desire). You are also responsible for loss or damage to this Product in shipping, so we would recommend that you insure your product.**

**What Brother will do:**

If the problem reported concerning your Machine and/or accompanying Consumable and Accessory Items is covered by this warranty and if you first reported the problem to Brother or an Authorized Service Center within the applicable warranty period, Brother or its Authorized Service Center will repair or replace the Machine and/or accompanying Consumable and Accessory Items at no charge to you for parts or labor. The decision as to whether to repair or replace the Machine and/or accompanying Consumable and Accessory Items is made by Brother in its sole discretion. Brother reserves the right to supply a refurbished or remanufactured replacement

# Brother™ Digital Color One-Year Limited Warranty and Replacement Service (USA Only)

Machine and/or accompanying Consumable and Accessory Items and use refurbished parts provided such replacement products conform to the manufacturer's specifications for new product/parts. The repaired or replacement Machine and/or accompanying Consumable and Accessory Items will be returned to you freight prepaid or made available for you to pick up at a conveniently located Authorized Service Center.

If the Machine and/or accompanying Consumable and Accessory Items are not covered by this warranty (either stage), you will be charged for shipping the Machine and/or accompanying Consumable and Accessory Items back to you and charged for any service and/or replacement parts/products at Brother's then current published rates.

**The foregoing are your sole (i.e., only) and exclusive remedies under this warranty.**

**What happens when Brother elects to replace your Machine:**

When a replacement Machine is authorized by Brother, and you have delivered the Machine to an Authorized Service Center, the Authorized Service Center will provide you with a replacement Machine after receiving one from Brother. If you are dealing directly with Brother's Express Exchange Service Brother will send to you a replacement Machine shipped for receipt within two business days, with the understanding that you will, after receipt of the replacement Machine, supply the required proof of purchase information, together with the Machine that Brother agreed to replace. You are then expected to pack the Machine that Brother agreed to replace in the package from the replacement Machine and return it to Brother using the pre-paid freight bill supplied by Brother in accordance with the instructions provided by Brother. Since you will be in possession of two machines, Brother will require that you provide a valid major credit card number. Brother will issue a hold against the credit card account number that you provide until Brother receives your original Product and determines that your original Product is entitled to warranty coverage. Your credit card will be charged up to the cost of a new Product only if: (i) you do not return your original Product to Brother within five (5) business days; (ii) the problems with your original Product are not covered by the limited warranty; (iii) the proper packaging instructions are not followed and has caused damage to the product; or (iv) the warranty period on your original Product has expired or has not been sufficiently validated with a copy of the proof of purchase (bill of sale). The replacement Machine you receive (even if refurbished or remanufactured) will be covered by the balance of the limited warranty period remaining on the original Product, plus an additional thirty (30) days. You will keep the replacement Machine that is sent to you and your original Machine shall become the property of Brother. **Retain your original Accessory Items and a copy of the return freight bill, signed by the courier.**

**Limitations:**

Brother is not responsible for damage to or loss of any equipment, media, programs or data related to the use of this Product. Except for the repair or replacement as described above, Brother shall not be liable for any direct, indirect, incidental or consequential damages or specific relief. Because some states do not allow the exclusion or limitation of consequential or incidental damages, the above limitation may not apply to you.

THIS WARRANTY IS GIVEN IN LIEU OF ALL OTHER WARRANTIES, WRITTEN OR ORAL, WHETHER EXPRESSED BY AFFIRMATION, PROMISE, DESCRIPTION, DRAWING, MODEL OR SAMPLE. ANY AND ALL WARRANTIES OTHER THAN THIS ONE, WHETHER EXPRESS OR IMPLIED, INCLUDING IMPLIED WARRANTIES OF MERCHANTABILITY AND FITNESS FOR A PARTICULAR PURPOSE, ARE HEREBY DISCLAIMED.

- This Limited Warranty is the only warranty that Brother is giving for this Product. It is the final expression and the exclusive and only statement of Brother's obligations to you. It replaces all other agreements and understandings that you may have with Brother or its representatives.
- This warranty gives you certain rights and you may also have other rights that may vary from state to state.
- This Limited Warranty (and Brother's obligation to you) may not be changed in any way unless you and Brother sign the same piece of paper in which we (1) refer to this Product and your bill of sale date, (2) describe the change to this warranty and (3) agree to make that change.

**Important:** *We recommend that you keep all original packing materials, in the event that you ship this Product*

© 2011 Brother International Corporation

## BROTHER MULTIFUNCTION CENTER / FAX MACHINE LIMITED WARRANTY (Canada only)

Pursuant to the limited warranty of 1 year from the date of purchase for labour and parts, Brother International Corporation (Canada) Ltd. (“Brother”), or its Authorized Service Centres, will repair or replace (at Brother’s sole discretion) this MFC/Fax machine free of charge if defective in material or workmanship. This warranty applies only to products purchased and used in Canada.

This limited Warranty does not include cleaning, consumables (including, without limitation, ink cartridges, print cartridges, print rolls, thermal paper rolls, toner cartridges, drum units, OPC belts, fixing units, print heads, paper feed rollers, transfer rolls, cleaning rollers, waste toner packs, oil bottles) or damage caused by accident, neglect, misuse or improper installation or operation, any damage caused from service, maintenance, modifications, or tampering by anyone other than a Brother Authorized Service Representative, or if shipped out of the country.

The use of supplies or consumable items that are non-Brother products may void your warranty. This limited warranty ceases when this machine is rented, sold, or otherwise disposed of. Operation of the MFC/Fax machine in excess of the specifications or with the Serial Number or Rating Label removed shall be deemed abuse and all repairs thereafter shall be the sole liability of the end-user/purchaser.
In order to obtain warranty service, the MFC/Fax machine must be delivered or shipped freight prepaid by the end-user/purchaser to a “Brother” Authorized Service Centre, together with your Canadian Proof of Purchase in the form of a Sales Receipt.

When shipping or transporting your MFC/Fax machine, please refer to your Operation Manual for the proper packaging procedures.

For Laser and LED units: Failure to remove the Toner Cartridge (and Toner Drum Unit, waste toner packs or oil bottles on applicable models) during shipping or transport will cause severe damage to the Laser MFC/Fax machine and will void the Warranty.

For inkjet units: (When shipping your Inkjet MFC/Fax machine remove the ink cartridges and replace them with the original protective parts. If original protective parts are not available, leave ink cartridges installed. Please avoid shipping the unit without original protective parts or ink cartridges.) Damage to your print head resulting from packing the Inkjet MFC/Fax machine without the ink cartridges or the protective parts will void your warranty.

Improper packaging may cause severe damage to the machine during shipping and will void the warranty.

BROTHER DISCLAIMS ALL OTHER WARRANTIES EXPRESSED OR IMPLIED INCLUDING, WITHOUT LIMITATIONS, ANY IMPLIED WARRANTIES OF MERCHANTABILITY OR FITNESS FOR A PARTICULAR PURPOSE, EXCEPT TO THE EXTENT THAT ANY WARRANTIES IMPLIED BY LAW CANNOT BE VALIDLY WAIVED.

No oral or written information, advice or representation provided by Brother, its Authorized Service Centres, Distributors, Dealers, Agents or employees, shall create another warranty or modify this warranty. The warranty states Brother’s entire liability and your exclusive remedy against Brother for any failure of the MFC/Fax machine to operate properly.

Neither Brother nor anyone else involved in the development, production, or delivery of this MFC/Fax machine shall be liable for any indirect, incidental, special, consequential, exemplary, or punitive damages, including lost profits, arising from the use of or inability to use the product, even if advised by the end user/purchaser of the possibility of such damages. Since some Provinces do not allow the above limitation of liability, such limitation, may not apply to you.

**This Limited Warranty gives you specific legal rights and you may also have other rights which vary from Province to Province.**

**Warranty Service is available at Brother Authorized Service Centres throughout Canada. For Technical Assistance or for the name and location of your nearest Authorized Service Centre call 1-877-BROTHER.**

**Internet support: support@brother.ca or browse Brother’s Web Site www.brother.ca.**

# Table of Contents

## Section I General


### 1 General information 2

Using the documentation ..... 2
Symbols and conventions used in the documentation ..... 2
Accessing the Software User's Guide and Network User's Guide ..... 3
Viewing documentation ..... 3
Accessing Brother support (Windows®) ..... 5
Control panel overview ..... 6
Data LED indications ..... 10

### 2 Loading paper and documents 11

Loading paper and print media ..... 11
Loading paper in the standard paper tray ..... 11
Loading paper in the manual feed slot ..... 13
Unprintable area ..... 17
Acceptable paper and other print media ..... 18
Recommended paper and print media ..... 18
Type and size of paper ..... 18
Handling and using special paper ..... 20
Loading documents ..... 23
Using the automatic document feeder (ADF) ..... 23
Using the scanner glass ..... 24

### 3 General Setup 25

Mode Timer ..... 25
Paper settings ..... 25
Paper Type ..... 25
Paper Size ..... 25
Volume settings ..... 26
Ring volume ..... 26
Beeper volume ..... 26
Speaker volume ..... 26
Automatic daylight savings time ..... 27
Ecology features ..... 27
Toner Save ..... 27
Sleep Time ..... 27
LCD Contrast ..... 28
Dial Prefix ..... 28
Setting up the prefix number ..... 28
Changing the prefix number ..... 28

## 4 Security features 29

Secure Function Lock 2.0 (MFC-9325CW only) ..... 29
Setting the password for the administrator ..... 29
Changing the password for the administrator ..... 30
Setting up the public user mode ..... 30
Setting up restricted users ..... 31
Turning Secure Function Lock on/off ..... 31
Switching Users ..... 32
Memory Security (MFC-9125CN only) ..... 32
Setting up the password ..... 33
Changing your memory security password ..... 33
Turning memory security on/off ..... 33
Setting Lock ..... 34
Setting up the password ..... 34
Changing your Setting Lock password ..... 34
Turning Setting Lock on/off ..... 35
Restricting dialing ..... 35
Dial pad restriction ..... 35
One Touch restriction ..... 35
Speed Dial restriction ..... 36

# Section II Fax

## 5 Sending a fax 38

How to fax ..... 38
Entering fax mode ..... 38
Sending a fax from the ADF ..... 38
Sending a fax from the scanner glass ..... 38
Faxing A4 size documents from the scanner glass ..... 39
Canceling a fax in progress ..... 39
Broadcasting (black & white only) ..... 39
Canceling a Broadcast in progress ..... 40
Additional sending operations ..... 40
Sending faxes using multiple settings ..... 40
Electronic cover page (black & white only) ..... 41
Contrast ..... 42
Changing Fax Resolution ..... 42
Dual access (black & white only) ..... 43
Real Time Transmission ..... 43
Overseas Mode ..... 44
Delayed Fax (black & white only) ..... 44
Delayed batch transmission (black & white only) ..... 44
Checking and canceling waiting jobs ..... 45
Sending a fax manually ..... 45
Sending a fax at the end of a conversation ..... 45
Out of memory message ..... 45

## 6 Receiving a fax 46


Choose the correct Receive Mode ..... 46
Using receive modes ..... 48
Fax Only ..... 48
Fax/Tel ..... 48
Manual ..... 48
External TAD ..... 48
Receive Mode settings ..... 49
Ring Delay ..... 49
F/T Ring Time (Fax/Tel mode only) ..... 49
Easy Receive ..... 50
Setting the Print Density ..... 50
Additional receiving operations ..... 51
Printing a reduced incoming fax ..... 51
Setting the Fax Receive Stamp (black & white only) ..... 51
Receiving a fax at the end of a conversation ..... 51
Printing a fax from the memory ..... 52
Receiving faxes into memory when the paper tray is empty (black & white only) ..... 52


## 7 Telephone services and external devices 53


Telephone line services ..... 53
Voice Mail ..... 53
Distinctive Ring ..... 54
Caller ID ..... 56
Connecting an external TAD (telephone answering device) ..... 57
Connections ..... 58
Recording an outgoing message (OGM) ..... 58
Special line considerations ..... 59
Multi-line connections (PBX) ..... 60
External and extension telephones ..... 60
Using external and extension telephones ..... 60
For Fax/Tel mode only ..... 61
Connecting an external or extension telephone ..... 61
Using a non-Brother cordless external handset ..... 61
Using Remote Codes ..... 61

## 8 Dialing and storing numbers 63

How to dial ..... 63
Manual dialing ..... 63
One touch dialing ..... 63
Speed dialing ..... 63
Search ..... 64
Fax redial ..... 64
Storing numbers ..... 64
Storing a pause ..... 64
Storing One Touch Dial numbers ..... 65
Storing Speed Dial numbers ..... 66
Changing One Touch and Speed Dial numbers ..... 68
Setting up Groups for Broadcasting ..... 69
Dialing access codes and credit card numbers ..... 71
Pause ..... 71
Tone or Pulse (Canada only) ..... 71

## 9 Remote Fax Options (black & white only) 72

Fax Forwarding ..... 72
Paging ..... 73
Fax Storage ..... 73
PC Fax Receive ..... 74
Changing Remote Fax Options ..... 75
Turning off Remote Fax Options ..... 75
Remote retrieval ..... 76
Setting a Remote Access Code ..... 76
Using your Remote Access Code ..... 76
Retrieving fax messages ..... 77
Changing the Fax Forwarding number ..... 77
Remote fax commands ..... 78

## 10 Polling 79

Polling receive ..... 79
Sequential polling ..... 79
Polled transmit (black & white only) ..... 80
Setup for polled transmit ..... 80

## 11 Printing reports 81

Fax reports ..... 81
Transmission verification report ..... 81
Fax Journal ..... 82
Reports ..... 82
How to print a report ..... 83

# Section III Copy


## 12 Making copies 86

How to copy ..... 86
Entering copy mode ..... 86
Making a single copy ..... 86
Making multiple copies ..... 86
Stop copying ..... 86
Copy options (temporary settings) ..... 87
Enlarging or reducing the image copied ..... 87
Using the Options key ..... 88
Improving copy quality ..... 89
Sorting copies using the ADF ..... 89
Adjusting Contrast, Color and Brightness ..... 89
Making N in 1 copies (page layout) ..... 91
Out of memory message ..... 92


# Section IV Direct printing


## 13 Printing photos from a digital camera (MFC-9325CW only) 94

Before using PictBridge ..... 94
PictBridge requirements ..... 94
Using PictBridge ..... 94
Setting your digital camera ..... 94
Printing images ..... 95
DPOF printing ..... 96
Printing images with Secure Function Lock 2.0 enabled (MFC-9325CW only) ... 96
Connecting a camera as a storage device ..... 98
Understanding the error messages ..... 98

## 14 Printing data from a USB Flash memory drive (MFC-9325CW only) 99

Supported file formats ..... 99
Creating a PRN or PostScript® 3™ file for direct printing ..... 99
Printing data directly from the USB Flash memory drive (MFC-9325CW only) . 100
Printing data directly from the USB flash memory drive with Secure Function Lock 2.0 enabled (MFC-9325CW only) ..... 101
Understanding the error messages ..... 103

# Section V Software


## 15 Software and Network features 106


# Section VI Appendixes


## A Safety and legal 108

Compilation and Publication ..... 108
Choosing a location ..... 108
To use the product safely ..... 111
Important safety instructions ..... 117
Regulation ..... 118
Standard telephone and FCC notices ..... 118
Federal Communications Commission (FCC) Declaration of Conformity (USA only) ..... 119
Industry Canada Compliance Statement (Canada only) ..... 120
EQUIPMENT ATTACHMENT LIMITATIONS (Canada only) ..... 121
For use in the USA or Canada only ..... 121
Disconnect device ..... 121
LAN connection ..... 121
International ENERGY STAR® Qualification Statement ..... 122
Trademarks ..... 123
Open Source Licensing Remarks ..... 123
Legal limitations for copying ..... 124

## B Options 125

Options ..... 125
Memory board ..... 126
Installing extra memory ..... 126

## C Troubleshooting and routine maintenance 128

Troubleshooting ..... 128
If you are having difficulty with your machine ..... 128
Improving the print quality ..... 136
Setting Dial Tone detection ..... 143
Telephone line interference/VoIP ..... 143
Error and maintenance messages ..... 144
Transferring your faxes or Fax Journal report ..... 150
Document jams ..... 151
Paper jams ..... 152
Routine maintenance ..... 157
Cleaning the outside of the machine ..... 157
Cleaning the scanner ..... 158
Cleaning the LED heads ..... 159
Cleaning the corona wires ..... 160
Cleaning the drum unit ..... 162

Cleaning the paper pick-up rollers ..... 166
Calibration ..... 167
Auto Registration ..... 168
Manual Registration ..... 168
Frequency (Color Correction) ..... 168
Replacing the consumable items ..... 169
Replacing a Toner cartridge ..... 171
Drum units ..... 176
Replacing the belt unit ..... 181
Replacing the waste toner box ..... 185
Replacing periodic maintenance parts ..... 190
Machine Information ..... 190
Checking the Serial Number ..... 190
Checking the Page Counters ..... 190
Checking the remaining life of parts ..... 191
Reset functions ..... 191
How to reset the machine ..... 192
Packing and shipping the machine ..... 192

**D Menu and features 197**

On-screen programming ..... 197
Menu table ..... 197
Memory storage ..... 197
Menu keys ..... 197
How to access the menu mode ..... 198
Menu table ..... 199
Entering text ..... 219

**E Specifications 221**

General ..... 221
Print media ..... 223
Fax ..... 224
Copy ..... 225
Scan ..... 226
Print ..... 227
Interfaces ..... 228
PictBridge (MFC-9325CW) ..... 229
Direct Print feature (MFC-9325CW) ..... 230
Computer requirements ..... 231
Consumable items ..... 232
Ethernet wired network ..... 233
Ethernet wireless network (MFC-9325CW) ..... 235
Authentication and encryption for wireless users only ..... 237
Wireless one-push configuration ..... 239

**F Glossary 240**

**G Index 244**

Section I

# General


General information 2
Loading paper and documents 11
General Setup 25
Security features 29

# 1 General information

## Using the documentation

Thank you for buying a Brother machine! Reading the documentation will help you make the most of your machine.

### Symbols and conventions used in the documentation

The following symbols and conventions are used throughout the documentation.

| | |
|---|---|
| **Bold** | Bold typeface identifies specific keys on the product's control panel or on the computer screen. |
| *Italics* | Italicized typeface emphasizes an important point or refers you to a related topic. |
| `Courier New` | Text in Courier New font identifies messages on the LCD of the product. |

**WARNING**

WARNING indicates a potentially hazardous situation which, if not avoided, could result in death or serious injuries.

**CAUTION**

CAUTION indicates a potentially hazardous situation which, if not avoided, may result in minor or moderate injuries.

**IMPORTANT**

IMPORTANT indicates a potentially hazardous situation which, if not avoided, may result in damage to property or loss of product functionality.

Electrical Hazard icons alert you to possible electrical shock.

Improper Setup icons alert you to devices and operations that are not compatible with the product.

Hot Surface icons warn you not to touch product parts that are hot.

Fire Hazard icons alert you to the possibility of fire.

Notes tell you how you should respond to a situation that may arise or give tips about how the operation works with other features.

Follow all warnings and instructions marked on the product.

# Accessing the Software User's Guide and Network User's Guide

This User's Guide does not contain all the information about the machine such as how to use the advanced features of Fax, Printer, Scanner, PC Fax and Network. When you are ready to learn detailed information about these operations, read the **Software User's Guide** and **Network User's Guide**.

## Viewing documentation

### Viewing documentation (Windows®)

To view the documentation, from the **Start** menu, select **Brother**, **MFC-XXXX** (where XXXX is your model name) from the programs group, and then choose **User's Guides in PDF format**.

If you have not installed the software, you can find the documentation by following the instructions below:

1. Turn on your PC.
   Insert the Brother CD-ROM into your CD-ROM drive.

2. If the language selection screen appears, click your language.

3. If the model name screen appears, click your model name. The CD-ROM main menu will appear.

*If this window does not appear, use Windows® Explorer to find and run the start.exe program from the root directory of the Brother CD-ROM.*

4. Click **Documentation**.

5. Click the documentation you want to read:
   **User's Guide** for stand-alone operations, **Software User's Guide**, **Network User's Guide** and **Quick Setup Guide**.

## How to find scanning instructions

There are several ways you can scan documents. You can find the instructions as follows:

### Software User's Guide:

- Scanning a document using the TWAIN driver in Chapter 2
- Scanning a document using the WIA driver (Windows® XP/Windows Vista®/Windows® 7) in Chapter 2
- Using ControlCenter3 in Chapter 3
- Network Scanning in Chapter 12

### ScanSoft™ PaperPort™ 11SE with OCR How-to-Guides:

- The complete ScanSoft™ PaperPort™ 11SE with OCR How-to-Guides can be viewed from the Help selection in the ScanSoft™ PaperPort™ 11SE application.

## How to find Network setup instructions

Your machine can be connected to a wireless or wired network. You can find basic setup instructions in the Quick Setup Guide. If your wireless access point supports Wi-Fi Protected Setup or AOSS™, follow the steps in the Quick Setup Guide. For more information about network setup please see the Network User's Guide.

## Viewing documentation (Macintosh)

1. Turn on your Macintosh.
   Insert the Brother CD-ROM into your CD-ROM drive.
2. The following window will appear.

3. Double-click the **Documentation** icon.
4. If the language selection screen appears, double-click your language.
5. Double-click the documentation you want to read:
   **User's Guide** for stand-alone operations, **Software User's Guide** and **Network User's Guide**.

## How to find scanning instructions

There are several ways you can scan documents. You can find the instructions as follows:

### Software User's Guide:

- Scanning in Chapter 8
- Using ControlCenter2 in Chapter 9
- Network Scanning in Chapter 12

### Presto! PageManager User's Guide:

**Note**

Presto! PageManager is available as a download from http://nj.newsoft.com.tw/download/brother/PM9SEInstaller_BR_multilang.dmg.

- The complete Presto! PageManager User's Guide can be viewed from the Help selection in the Presto! PageManager application.

### How to find Network setup instructions

Your machine can be connected to a wireless or wired network. You can find basic setup instructions in the Quick Setup Guide. If your wireless access point supports Wi-Fi Protected Setup or AOSS™, follow the steps in the Quick Setup Guide. For more information about network setup please see the Network User's Guide.

### Viewing the Mobile Print/Scan Guide documentation

This Guide provides useful information about printing JPEG and PDF files from your mobile device and scanning from your Brother machine to your mobile device when connected on a WiFi network.

You can find the documentation at the Brother Solutions Center at http://solutions.brother.com/.

## Accessing Brother support (Windows®)

You can find all the contacts you will need, such as Web support (Brother Solutions Center), Customer Service and Brother Authorized Service Centers on page i and on the Brother CD-ROM.

- Click **Brother Support** on the main menu. The following screen will appear:

- To access our web site (http://www.brother.com/) clicks **Brother Home Page**.
- To view all Brother Numbers, including Customer Service numbers for the USA and Canada, click **Support Information**.
- To access the USA Brother online shopping mall (http://www.brothermall.com/) for additional product and service information, click **Brother Mall.com**.
- To access Canada's Brother online shopping mall (http://www.brother.ca/) for additional product and services information, click **Shop Online (Canada)**.
- For the latest news and product support information (http://solutions.brother.com/), click **Brother Solutions Center**.
- To visit our web site for original/genuine Brother supplies (http://www.brother.com/original/), click **Supplies Information**.

To return to the main page, click **Back**.

Or, if you have finished, click **Exit**.

# Control panel overview

**MFC-9125CN** and **MFC-9325CW** have similar keys.

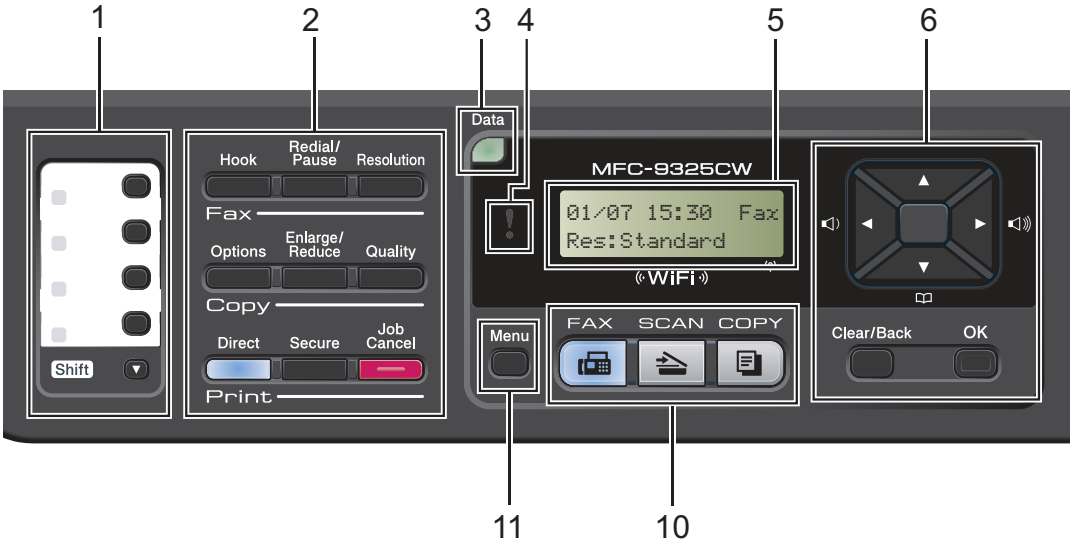


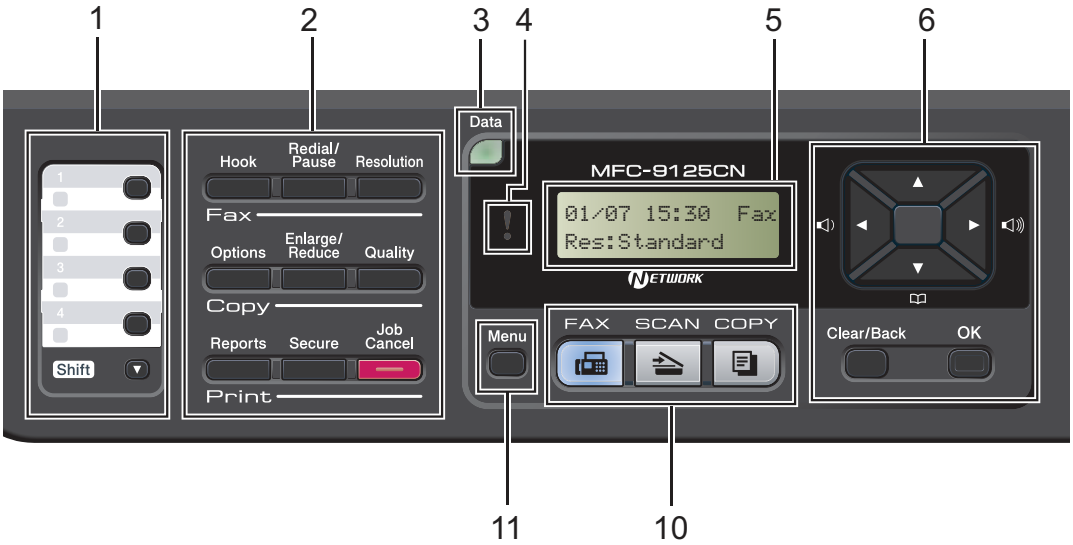

3
4
5
6
7
8
Data
MFC-9325CW
01/07 15:30 Fax
Res:Standard
WiFi
Menu
FAX SCAN COPY
Clear/Back
OK
1
2 ABC
3 DEF
4 GHI
5 JKL
6 MNO
7 PQRS
8 TUV
9 WXYZ
*
0
#
Stop/Exit
Color
Start
Black
11
10
9

3
4
5
6
7
8
Data
MFC-9125CN
01/07 15:30 Fax
Res:Standard
NETWORK
Menu
FAX SCAN COPY
Clear/Back
OK
1
2 ABC
3 DEF
4 GHI
5 JKL
6 MNO
7 PQRS
8 TUV
9 WXYZ
*
0
#
Stop/Exit
Color
Start
Black
11
10
9

1 **One Touch keys**

These 4 keys give you instant access to 8 previously stored numbers.

**Shift**

Lets you access One Touch numbers 5 to 8 when held down.

2 **Fax, Copy and Print keys**

**Fax keys:**

**Hook**

Press before dialing if you want to make sure a fax machine will answer, and then press **Black Start** or **Color Start**. Also, press this key after you pick up the handset of an external telephone during the F/T ring (fast double-rings).

**Redial/Pause**

Redials the last number called. It also inserts a pause when programming quick dial numbers or when dialing a number manually.

**Resolution**

Sets the resolution when sending a fax.

**Copy keys**:

**Options**

You can quickly and easily choose temporary settings for copying.

**Enlarge/Reduce**

Reduces or enlarges copies.

**Quality**

Lets you change the quality for the next copy.

**Print keys:**

**Direct (MFC-9325CW)**

Lets you print data from a USB flash memory drive that you can connect directly to the machine. You can also print images directly from your PictBridge compatible camera.

(See *Printing photos from a digital camera (MFC-9325CW only)* on page 94.)

**Reports (MFC-9125CN)**

Print the Transmission Verification Reports, Help List, Tel Index List, Fax Journal, User Settings and Network Config.

**Secure**

You can print data saved in the memory when you enter your four-digit password. (For details about using the Secure key, see the *Software User's Guide* on the CD-ROM.)

(MFC-9325CW) When using Secure Function Lock, you can switch restricted users by holding down **Shift** as you press **Secure**. (See *Secure Function Lock 2.0 (MFC-9325CW only)* on page 29.)

**Job Cancel**

Cancels a programmed print job and clears it from the machine's memory. To cancel multiple print jobs, hold down this key until the LCD shows `Job Cancel (All)`.

3 **Data LED**

The LED will flash depending on the machine status.

4 **Error LED**

Blinks in orange when the LCD displays an error or an important status message.

5 **LCD**

Displays messages to help you set up and use your machine.

(MFC-9325CW only) A four level indicator shows the current wireless signal strength if you are using a wireless connection.

6 **Clear/Back**

Deletes entered data or lets you cancel the current setting.

**OK**

Lets you store your settings in the machine.

**Volume keys:**

◄ or ►

Press to scroll backwards or forwards through menu selections. Press to change the volume when in fax or standby mode.

▲ or ▼

Press to scroll through the menus and options.

**Address Book:**

▼

Lets you look up numbers that are stored in the dialing memory. It also lets dial stored numbers by pressing a three digit number.

**7 Dial pad**

Use these keys to dial telephone and fax numbers and as a keyboard for entering information into the machine.

(Canada only) The **#** key temporarily switches the dialing mode from Pulse to Tone during a telephone call.

**8 Stop/Exit**

Stops an operation or exits from a menu.

**9 Start:**

**Color**

Lets you start sending faxes or making copies in full color.

**Black**

Lets you start sending faxes or making copies in black & white.

**10 Mode keys:**

**FAX**

Puts the machine in Fax mode.

**SCAN**

Puts the machine in Scan mode.

(For details about scanning, see the *Software User's Guide* on the CD-ROM.)

**COPY**

Puts the machine in Copy mode.

**11 Menu**

Lets you access the Menu to program your settings in this machine.

## Data LED indications

The **Data** LED (light emitting diode) will flash depending on the machine's status.

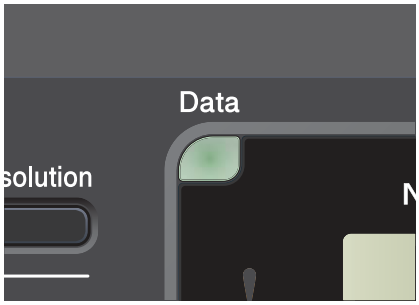


| LED | Machine Status | Description |
|---|---|---|
| | Ready Mode | The machine is ready to print, in sleep mode, there is no print data, or the power switch is off. |
| Green (blinking) | Receiving Data | The machine is either receiving data from the computer, processing data in memory, or printing data. |
| Green | Data Remaining in Memory | Print data remains in the machine memory. |

# 2 Loading paper and documents

## Loading paper and print media

The machine can feed paper from the standard paper tray.

When you put paper into the paper tray, note the following:

- If your application software supports paper size selection on the print menu, you can select it through the software. If your application software does not support it, you can set the paper size in the printer driver or by using the control panel buttons.

## Loading paper in the standard paper tray

### Printing on plain paper, thin paper or recycled paper from the paper tray

1. Pull the paper tray completely out of the machine.

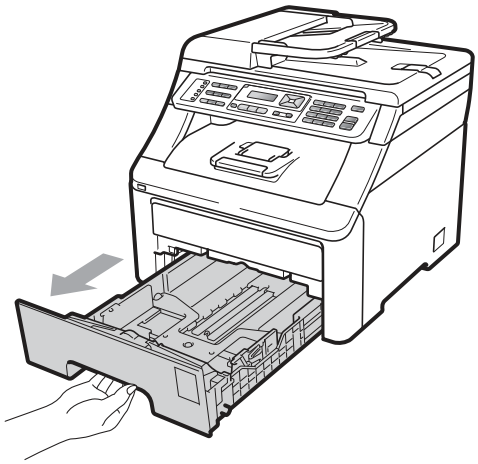

2. While pressing the green paper-guide release lever (1), slide the paper guides to fit the paper size you are loading in the tray. Make sure that the guides are firmly in the slots.

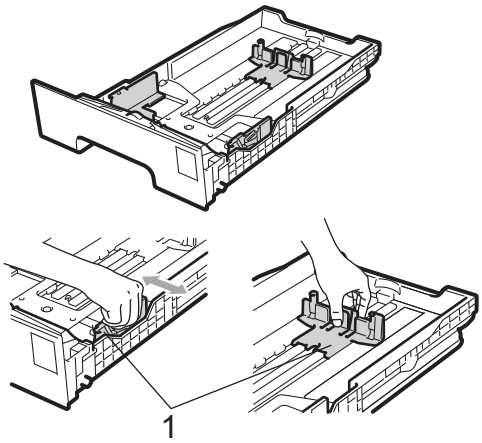


**Note**

For Legal and Folio size paper, press the release button (1) in the bottom of the paper tray and then pull out the back of the paper tray. (Legal or Folio size paper is not available in some regions.)

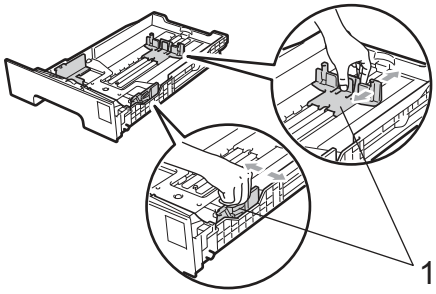

3 Fan the stack of paper well to avoid paper jams and misfeeds.

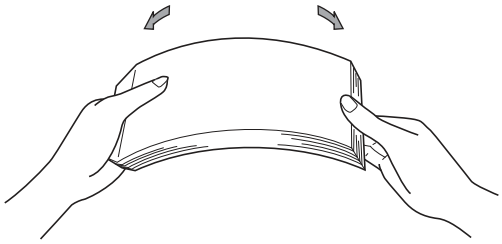

4 Put paper in the tray, and make sure that the paper is below the maximum paper mark (1). The side to be printed on must be face down.

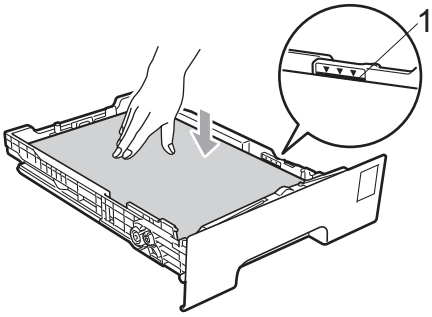


**IMPORTANT**

Make sure the paper guides touch the sides of the paper so it will feed properly. If you do not do this, it may cause damage to your machine.

5 Put the paper tray firmly back in the machine. Make sure that it is completely inserted into the machine.

6 Lift up the support flap (1) to prevent paper from sliding off the face-down output tray or remove each page as soon as it comes out of the machine.

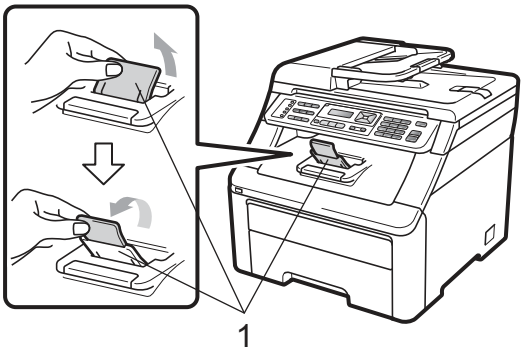

## Loading paper in the manual feed slot

You can load envelopes and special print media one at a time into this slot. Use the manual feed slot to print or copy on labels, envelopes or thicker paper.

### Printing on plain paper, recycled paper or bond paper from the manual feed slot

Before loading, press the corners and sides of the envelopes to make them as flat as possible.

**Note**

The machine automatically turns on the Manual Feed mode when you put paper in the manual feed slot.

1. Lift up the support flap (1) to prevent paper from sliding off the face-down output tray or remove each page as soon as it comes out of the machine.

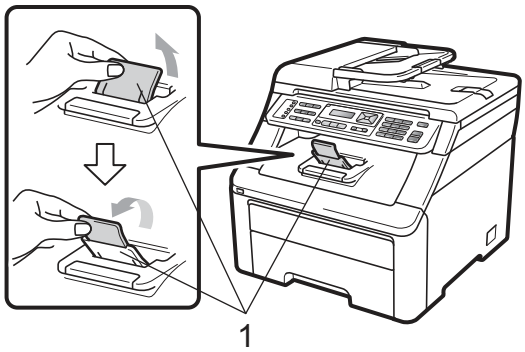


2. Open the manual feed slot cover.

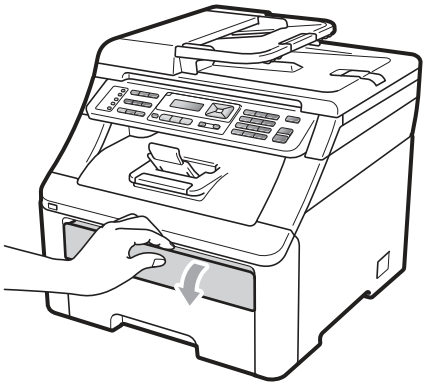

3. Using both hands, slide the manual feed slot paper guides to the width of the paper that you are going to use.

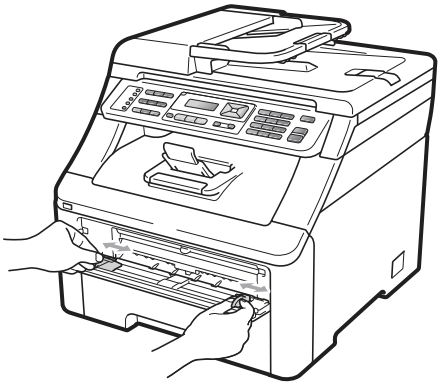

4 Using both hands, put one piece of paper in the manual feed slot with the print side face up until the front edge of the paper touches the paper feed roller. Wait until the machine automatically feeds the paper. When you feel the machine pull in the paper, let go.

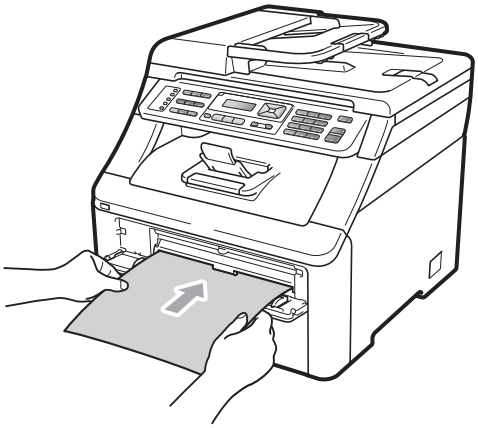

## Printing on thick paper, labels, envelopes or small paper

When the back output tray is pulled down, the machine has a straight paper path from the manual feed slot through to the back of the machine. Use this paper output method when you want to print on thick paper, labels, envelopes or paper that is smaller than 4.1 × 5.8 in. (or A6 size).

**Note**

- Remove each printed sheet or envelope immediately to prevent a paper jam.
- The machine automatically turns on the Manual Feed mode when you put paper in the manual feed slot.

1 Open the back cover (back output tray).

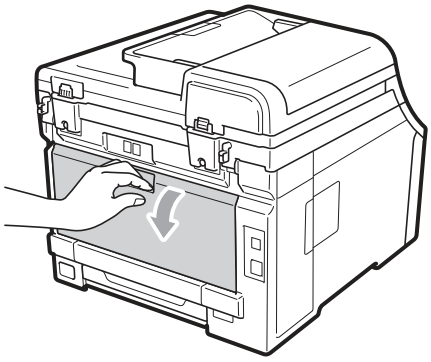

2 <For printing envelopes only>
Pull down the two gray levers, one on the left-hand side and one on the right-hand side, toward you as shown in the illustration below.

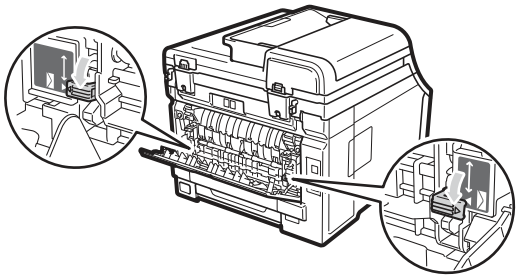

3 Open the manual feed slot cover.

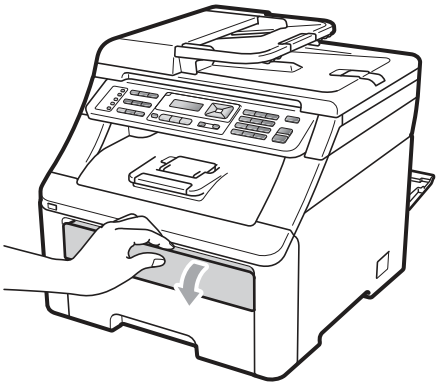

4 Using both hands, slide the manual feed slot paper guides to the width of the paper that you are going to use.

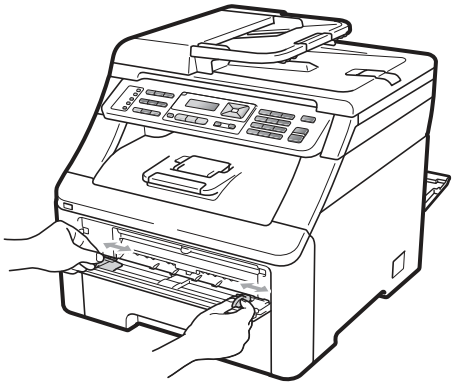

5 Using both hands, put one sheet of paper or one envelope in the manual feed slot until the front edge of the paper or envelope touches the paper feed roller. When you feel the machine pull in the paper, let go.

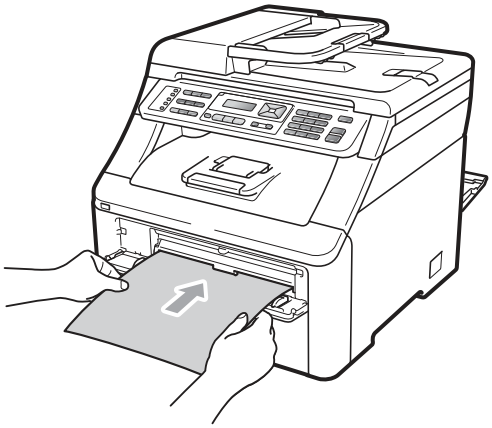

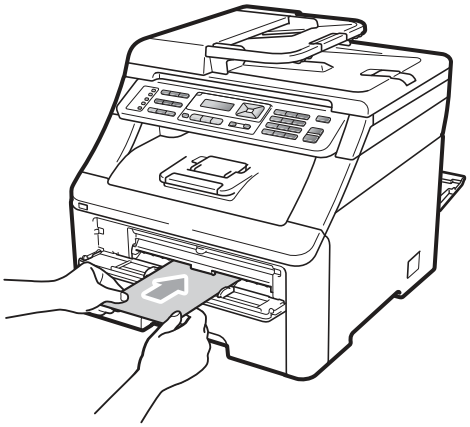

**Note**

- Put the paper into the manual feed slot with the side to be printed face up.
- Make sure that the print media is straight and in the proper position on the manual feed slot. If it is not, the paper may not be fed properly, resulting in a skewed printout or a paper jam.
- Do not put more than one sheet of paper in the manual feed slot at any one time, as it may cause a jam.
- Pull the paper out completely when you retry putting the paper into the manual feed.
- If you put paper or other print media in the manual feed slot before the machine is in the Ready mode, an error may occur and the machine will stop printing.
- To easily remove a small printout from the output tray, lift up the scanner by using both hands as shown in the illustration.

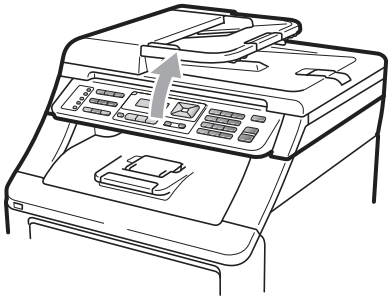

- You can still use the machine while the scanner is up. To close the scanner, push it down with both hands.

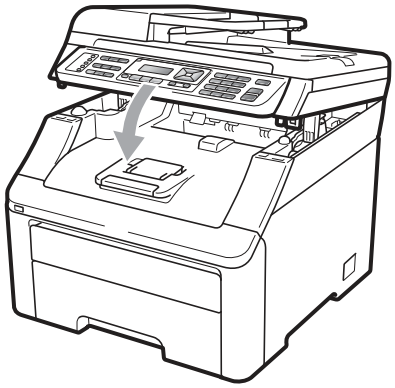

- When the top cover is open, you cannot open the scanner.

# Unprintable area

## Unprintable area for faxes and copies

The figures below show unprintable areas.

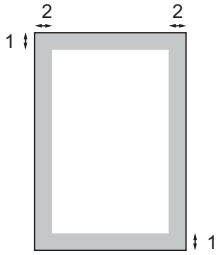


| Usage | Document Size | Top (1)<br>Bottom (1) | Left (2)<br>Right (2) |
|---|---|---|---|
| Fax | Letter | 0.16 in. (4 mm) | 0.15 in. (3.95 mm) |
| | A4 | 0.16 in. (4 mm) | 0.04 in. (1 mm) |
| Copy | Letter | 0.16 in. (4 mm) | 0.16 in. (4 mm) |
| | A4 | 0.16 in. (4 mm) | 0.12 in. (3 mm) |

**Note**

This unprintable area shown above is for a single copy or a 1 in 1 copy using Letter size paper. The area that cannot be printed on will vary by paper size.

## Unprintable area when printing from a computer

When using the printer driver the printable area is smaller than the paper size, as shown below.

**Portrait**

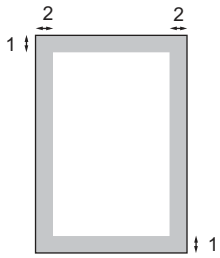


**Landscape**

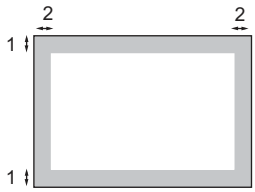


| | Windows® printer driver and Macintosh printer driver<br>BRScript Driver for Windows® and Macintosh |
|---|---|
| 1 | 0.16 in. (4.23 mm) |
| 2 | 0.16 in. (4.23 mm) |

**Note**

The area that cannot be printed on may vary depending on the paper size and the printer driver you are using. The unprintable area shown above is for Letter size paper.

# Acceptable paper and other print media

Print quality may vary according to the type of paper you are using.

You can use the following types of print media: thin paper, plain paper, thick paper, bond paper, recycled paper, labels or envelopes.

For best results, follow the instructions below:

- Use paper made for plain paper copying.
- Use paper that is 20 to 24 lb (75 to 90 g/m$^2$).
- DO NOT put different types of paper in the paper tray at the same time because it may cause paper jams or misfeeds.
- For proper printing, you must choose the same paper size from your software application as the paper in the tray.
- Avoid touching the printed surface of the paper immediately after printing.
- Use long grain paper with a neutral Ph value, and a moisture content of approx. 5%.

## Recommended paper and print media

To get the best print quality, we suggest using the following paper.

| Paper Type | Item |
|---|---|
| Plain Paper | Xerox 4200DP 20 lb |
| | Hammermill Laser Print (24 lb=90 g/m$^2$) |
| Recycled Paper | No specific brand recommended |
| Labels | Avery laser labels white #5160 |
| Envelope | No specific brand recommended |

## Type and size of paper

The machine loads paper from the installed standard paper tray or manual feed slot.

### Standard paper tray

Since the standard paper tray is a universal type, you can use any of the paper sizes (one paper type and size at a time) listed in the table in *Paper capacity of the paper trays* on page 19. The standard paper tray can hold up to 250 sheets of Letter/A4, Legal or Folio size paper (20 lb or 80 g/m$^2$). Paper can be loaded up to the maximum paper mark on the sliding paper width guide.

### Manual feed slot

The manual feed slot can hold a sheet with a size of 3 to 8.66 in. (76.2 to 220 mm) wide and 4.57 to 16 in. (116 to 406.4 mm) long. Use the manual feed slot if you are using special paper, envelopes or labels.

### The name for the paper trays in the printer driver in this Guide are as follows:

| Tray and optional unit | Name |
|---|---|
| Standard paper tray | Tray |
| Manual feed slot | Manual Feed |

## Paper capacity of the paper trays

| | Paper size | Paper types | No. of sheets |
|---|---|---|---|
| Paper Tray | A4, Letter, Legal, Executive, A5, A5 (Long Edge), A6, B5 (ISO), B6 (ISO) and Folio [1]. | Plain paper, Thin paper and Recycled paper | up to 250<br>[20 lb (80 g/m$^2$)] |
| Manual feed slot<br>(Manual Feed) | Width: 3.0 to 8.66 in. (76.2 to 220 mm)<br>Length: 4.57 to 16 in. (116 to 406.4 mm) | Plain paper, Thin paper, Thick paper, Thicker paper, Bond paper, Recycled paper, Envelopes and Labels. | 1 sheet [20 lb (80 g/m$^2$)]<br>1 Envelope |

[1] Folio size is 8.5 in. × 13 in. (215.9 mm x 330.2 mm)

## Recommended paper specifications

The following paper specifications are suitable for this machine.

| | |
|---|---|
| Basis weight | 20-24 lb (75-90 g/m$^2$) |
| Thickness | 80-110 μm |
| Roughness | Higher than 20 sec. |
| Stiffness | 90-150 cm$^3$/100 |
| Grain direction | Long grain |
| Volume resistivity | 10e$^9$-10e$^{11}$ ohm |
| Surface resistivity | 10e$^9$-10e$^{12}$ ohm-cm |
| Filler | $CaCO_3$ (Neutral) |
| Ash content | Below 23 wt% |
| Brightness | Higher than 80% |
| Opacity | Higher than 85% |

## Handling and using special paper

The machine is designed to work well with most types of xerographic and bond paper. However, some paper variables may have an effect on print quality or handling reliability. Always test samples of paper before purchasing to ensure desirable performance. Store paper in its original packaging and keep it sealed. Keep the paper flat and away from moisture, direct sunlight and heat.

Some important guidelines when selecting paper are:

- DO NOT use inkjet paper because it may cause a paper jam or damage your machine.
- Preprinted paper must use ink that can withstand the temperature of the machine's fusing process 392 degrees Fahrenheit (200 degrees centigrade).
- If you use bond paper, paper having a rough surface or paper that is wrinkled or creased, the paper may exhibit degraded performance.

### Types of paper to avoid

**IMPORTANT**

Some types of paper may not perform well or may cause damage to your machine.

DO NOT use paper:

- that is highly textured
- that is extremely smooth or shiny
- that is curled or warped

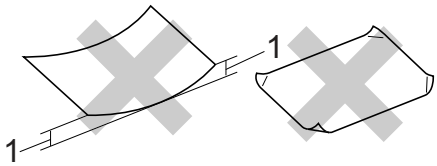


**1 0.08 in. (2 mm) or greater curl may cause jams to occur.**

- that is coated or has a chemical finish
- that is damaged, creased or folded
- that exceeds the recommended weight specification in this guide
- with tabs and staples
- with letterheads using low temperature dyes or thermography
- that is multipart or carbonless
- that is designed for inkjet printing

If you use any of the types of paper listed above, they may damage your machine. This damage is not covered under any Brother warranty or service agreement.

## Envelopes

Most envelopes will be suitable for your machine. However, some envelopes may have feed and print-quality problems because of the way they have been made. A suitable envelope should have edges with straight, well-creased folds and the leading edge should not be thicker than two sheets of paper. The envelope should lie flat and not be of baggy or flimsy construction. You should buy quality envelopes from a supplier who understands that you will be using the envelopes in a laser machine.

Envelopes can only be fed from the Manual feed slot. We recommend that you print a test envelope to make sure the print results are what you want before you print or purchase a large quantity of envelopes.

Check the following:

- Envelopes should have a lengthwise sealing flap.
- The sealing flaps should be folded crisply and correctly (irregularly cut or folded envelopes may cause paper jams).
- Envelopes should consist of two layers of paper in the area circled in the figure below.

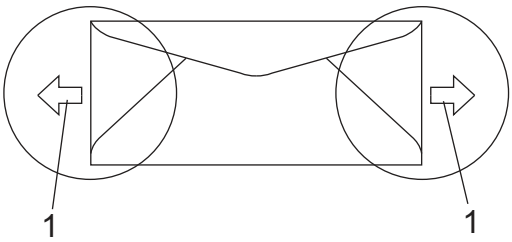


**1 Feeding direction**

- Envelope joints that are sealed by the manufacturer should be secure.
- We recommend that you do not print within 0.6 in. (15 mm) of the edges of envelopes.

## Types of envelopes to avoid

**IMPORTANT**

DO NOT use envelopes:

- that are damaged, curled, wrinkled or an unusual shape
- that are extremely shiny or textured
- with clasps, staples, snaps or tie strings
- with self-adhesive closures
- that are of a baggy construction
- that are not sharply creased
- that are embossed (have raised writing on them)
- that were previously printed by a laser/LED machine
- that are pre-printed on the inside
- that cannot be arranged neatly when stacked
- that are made of paper that weighs more than the paper weight specifications for the machine
- with edges that are not straight or consistently square
- with windows, holes, cut-outs or perforations
- with glue on surface as shown in figure below

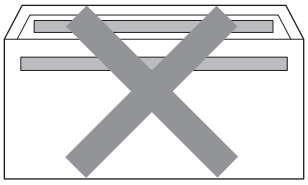

- with double flaps as shown in figure below

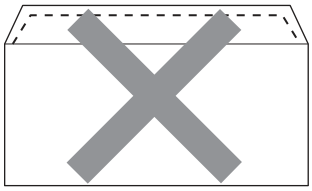

- with sealing flaps that have not been folded at purchase
- with sealing flaps as shown in figure below

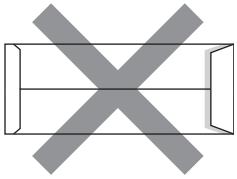

- with each side folded as shown in figure below

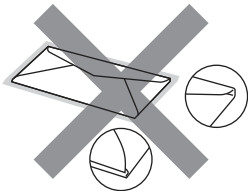

If you use any of the types of envelopes listed above, they may damage your machine. This damage may not be covered under any Brother warranty or service agreement.

Occasionally you may experience paper feed problems caused by the thickness, size and flap shape of the envelopes you are using.

## Labels

The machine will print on most types of labels designed for use with a laser machine. Labels should have an adhesive that is acrylic-based since this material is more stable at the high temperatures in the fuser unit. Adhesives should not come in contact with any part of the machine, because the label stock may stick to the drum unit or rollers and cause jams and print quality problems. No adhesive should be exposed between the labels. Labels should be arranged so that they cover the entire length and width of the sheet. Using labels with spaces may result in labels peeling off and causing serious jams or print problems.

All labels used in this machine must be able to withstand a temperature of 392 degrees Fahrenheit (200 degrees centigrade) for a period of 0.1 seconds.

Label sheets should not exceed the paper weight specifications described in this User's Guide. Labels exceeding this specification may not feed or print properly and may cause damage to your machine.

Labels must be fed from the manual feed slot only.

### Types of labels to avoid

Do not use labels that are damaged, curled, wrinkled or an unusual shape.

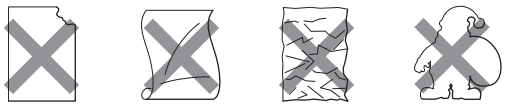

**IMPORTANT**

Avoid feeding labels with the carrier sheet exposed because your machine will be damaged.

# Loading documents

## Using the automatic document feeder (ADF)

The ADF can hold up to 35 pages and feeds each sheet individually. Use standard 20 lb (80 g/m$^2$) paper and always fan the pages before putting them in the ADF.

### Recommended environment

| |
|---|
| Temperature: 68°F to 86°F (20°C to 30°C) |
| Humidity: 50% - 70% |
| Paper: Xerox 4200 (20 lb/Letter) |

**IMPORTANT**

- DO NOT leave thick documents on the scanner glass. If you do this, the ADF may jam.
- DO NOT use paper that is curled, wrinkled, folded, ripped, stapled, paper-clipped, pasted or taped.
- DO NOT use cardboard, newspaper or fabric.
- To avoid damaging your machine while using the ADF, DO NOT pull on the document while it is feeding.

**Note**

To scan documents that are not suitable for the ADF, see *Using the scanner glass* on page 24.

- Make sure documents with correction fluid or written with ink are completely dry.
- Documents to be faxed must be from 5.8 to 8.5 in. (147.3 to 215.9 mm) wide and from 5.8 to 14 in. (147.3 to 355.6 mm) long, and of a standard weight [20 lb (80 g/m$^2$)].

1. Unfold the ADF document output support flap (1) and the ADF support flap (2).

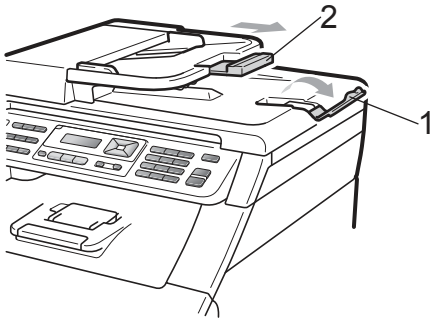


2. Fan the pages well.
3. Place your document **face up, top edge first** in the ADF until the LCD display message changes and you feel it touch the feed rollers.
4. Adjust the paper guides (1) to fit the width of your document.

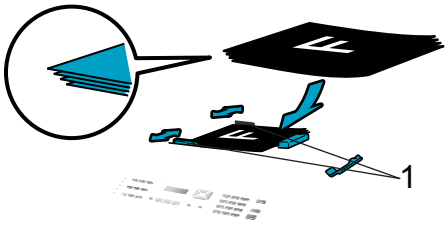

## Using the scanner glass

You can use the scanner glass to fax, copy or scan pages of a book one page at a time.

Documents can be up to 8.5 in. wide and 11.7 in. long (215.9 mm wide and 297 mm long).

**Note**

To use the scanner glass, the ADF must be empty.

1. Lift the document cover.
2. Using the document guidelines on the left and top, place the document face down in the upper left corner of the scanner glass.

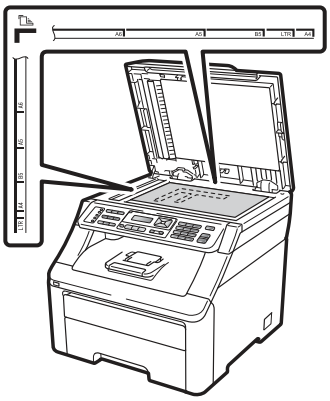

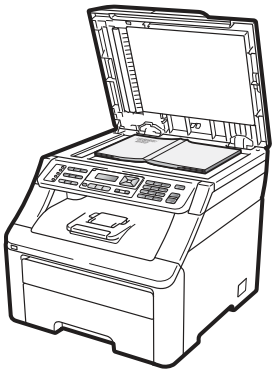

3. Close the document cover.

**IMPORTANT**

If the document is a book or is thick do not slam the cover or press on it.

# 3 General Setup

## Mode Timer

The machine has three mode keys on the control panel: **FAX**, **SCAN**, and **COPY**.

You can set how much time the machine takes after the last Copy or Scan operation to return to Fax mode. If you choose `Off`, the machine will stay in the mode you used last.

This setting also sets the time the machine will change from individual user to the Public mode when using Secure Function Lock. (See *Switching Users* on page 32.)

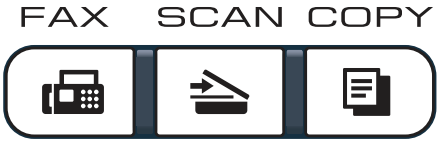


1. Press **Menu**, **1**, **1**.

```
General Setup
1.Mode Timer
```

2. Press ▲ or ▼ to choose `0 Sec`, `30 Secs`, `1 Min`, `2 Mins`, `5 Mins` or `Off`.
   Press **OK**.
3. Press **Stop/Exit**.

## Paper settings

### Paper Type

Set up the machine for the type of paper you are using. This will give you the best print quality.

1. Press **Menu**, **1**, **2**, **1**.

```
Paper
1.Paper Type
```

2. Press ▲ or ▼ to choose `Thin`, `Plain`, `Thick`, `Thicker` or `Recycled Paper`.
   Press **OK**.
3. Press **Stop/Exit**.

### Paper Size

You can use ten sizes of paper for printing copies: A4, Letter, Legal, Executive, A5, A5 L, A6, B5, B6 and Folio and four sizes for printing faxes: A4, Letter, Legal or Folio (8.5"×13").

When you change the size of paper in the tray, you will also need to change the setting for paper size at the same time so your machine can fit the document or an incoming fax on the page.

1. Press **Menu**, **1**, **2**, **2**.

```
Paper
2.Paper Size
```

2. Press ▲ or ▼ to choose `A4`, `Letter`, `Legal`, `Executive`, `A5`, `A5 L`, `A6`, `B5`, `B6` or `Folio`.
   Press **OK**.
3. Press **Stop/Exit**.

# Volume settings

## Ring volume

You can choose a ring volume level from a range of settings, from `High` to `Off`.

While in Fax mode press ◄) or ◄)) to adjust the volume level. The LCD will show the current setting, and each key press will change the volume to the next level. The machine will keep the new setting until you change it.

You can also change the ring volume through the menu:

1. Press **Menu**, **1**, **3**, **1**.

```
Volume
1.Ring
```

2. Press ▲ or ▼ to choose `Off`, `Low`, `Med` or `High`.
   Press **OK**.
3. Press **Stop/Exit**.

## Beeper volume

When the beeper is on, the machine will beep when you press a key, make a mistake, or after you send or receive a fax. You can choose a range of volume levels, from `High` to `Off`.

1. Press **Menu**, **1**, **3**, **2**.

```
Volume
2.Beeper
```

2. Press ▲ or ▼ to choose `Off`, `Low`, `Med` or `High`.
   Press **OK**.
3. Press **Stop/Exit**.

## Speaker volume

You can choose a range of speaker volume levels, from `High` to `Off`.

1. Press **Menu**, **1**, **3**, **3**.

```
Volume
3.Speaker
```

2. Press ▲ or ▼ to choose `Off`, `Low`, `Med` or `High`.
   Press **OK**.
3. Press **Stop/Exit**.

You can also adjust the speaker volume with the control panel keys.

1. Press (**FAX**).
2. Press **Hook**.
3. Press ◄) or ◄)).
   This setting will stay until you change it again.
4. Press **Hook**.

# Automatic daylight savings time

You can set the machine to change automatically for Daylight Savings Time. It will set itself forward one hour in the Spring, and back one hour in the Fall.

1. Press **Menu**, **1**, **4**.

```
General Setup
4.Auto Daylight
```

2. Press ▲ or ▼ to choose On or Off. Press **OK**.
3. Press **Stop/Exit**.

# Ecology features

## Toner Save

You can save toner using this feature. When you set Toner Save to On, print appears lighter. The default setting is Off.

1. Press **Menu**, **1**, **5**, **1**.

```
Ecology
1.Toner Save
```

2. Press ▲ or ▼ to choose On or Off. Press **OK**.
3. Press **Stop/Exit**.

**Note**

We do not recommend Toner Save for printing Photo or Gray Scale images.

## Sleep Time

The Sleep Time setting can reduce power consumption by turning off the fuser while the machine is idle.

You can choose how long the machine must be idle before it goes into sleep mode. When the machine receives a fax, computer data, or makes a copy, the timer will be reset. The default setting is 005 minutes.

While the machine is in sleep mode the LCD will display Sleep. When printing or copying in sleep mode, there will be a short delay while the fuser warms up.

1. Press **Menu**, **1**, **5**, **2**.

```
Ecology
2.Sleep Time
```

2. Enter the length of time the machine is idle before entering sleep mode. Press **OK**.
3. Press **Stop/Exit**.

# LCD Contrast

You can change the contrast to make the LCD look lighter or darker.

1. Press **Menu**, **1**, **6**.

```
General Setup
6.LCD Contrast
```

2. Press ▲ to make the LCD darker. Or, press ▼ to make the LCD lighter. Press **OK**.

3. Press **Stop/Exit**.

# Dial Prefix

The Dial Prefix setting will automatically dial a predefined number before every fax number you dial. For example: If your telephone system requires a 9 to dial an outside number use this setting to automatically dial 9 for every fax you send.

## Setting up the prefix number

1. (USA) Press **Menu**, **0**, **5**.
   (Canada) Press **Menu**, **0**, **6**.

2. Enter the prefix number (up to 5 digits) on the dial pad.
   Press **OK**.

**Note**

- You can use the numbers 0 to 9, #, ∗ and !. (Press **Hook** to display “!”.)

  You cannot use ! with any other numbers or characters.

  If your telephone system requires a timed break recall (hookflash), press **Hook** to enter the break.

- (Canada only) If the pulse dialing mode is on, # and ∗ are not available to use.

3. Press **Stop/Exit**.

## Changing the prefix number

1. (USA) Press **Menu**, **0**, **5**.
   (Canada) Press **Menu**, **0**, **6**.

2. Do one of the following:
   - To change the prefix number, press **1**.
   - To exit without making a change, press **2**. Go to step ❹.

3. Enter a new prefix number using the dial pad (up to 5 digits), press **OK**.

4. Press **Stop/Exit**.

# 4 Security features

## Secure Function Lock 2.0 (MFC-9325CW only)

Secure Function Lock lets you restrict Public access to the following machine functions:

- Fax Tx
- Fax Rx
- Copy
- Scan
- USB Direct
- PC Print
- Color Print

This feature also prevents users from changing the Default settings of the machine by limiting access to the Menu settings.

Before using the security features you must first enter an administrator password.

Access to restricted operations can be enabled by creating a restricted user. Restricted users must enter a user password to use the machine.

Make a careful note of your password. If you forget it, you will have to reset the password stored in the machine. For information about how to reset the password call Brother Customer Service.

**Note**

- Secure Function Lock can be set manually at the control panel or by using Web Based Management. We recommend using Web Based Management to configure this feature. For more information, see the *Network User's Guide* on the CD-ROM.
- Only administrators can set limitations and make changes for each user.
- When Secure Function Lock is on, you can only use `1.Contrast`, `6.Polled TX` and `7.Coverpg Setup` under `2.Setup Send` in the Fax menu.

  If Fax Tx is disabled, you cannot use any function in the Fax menu.
- Polling Receive is enabled only when both Fax Tx and Fax Rx are enabled.

### Setting the password for the administrator

The password you set in these steps is for the administrator. This password is used to set up users and to turn Secure Function Lock on or off. (See *Setting up restricted users* on page 31 and *Turning Secure Function Lock on/off* on page 31.)

1. Press **Menu**, **1**, **7**, **1**.

   ```
   Security
   1.Function Lock
   ```

2. Enter a four-digit number for the password using numbers 0-9.
   Press **OK**.

3. Re-enter the password when the LCD shows `Verify:`.
   Press **OK**.

4. Press **Stop/Exit**.

## Changing the password for the administrator

1. Press **Menu**, **1**, **7**, **1**.

   ```
   Security
   1.Function Lock
   ```

2. Press ▲ or ▼ to choose `Set Password`.
   Press **OK**.

3. Enter the registered four-digit password.
   Press **OK**.

4. Enter a four-digit number for the new password.
   Press **OK**.

5. If the LCD shows `Verify:` re-enter the new password.
   Press **OK**.

6. Press **Stop/Exit**.

## Setting up the public user mode

Public user mode restricts the functions that are available for Public users. Public users do not need to enter a password to access the features made available through this setting. You can set up one Public user.

1. Press **Menu**, **1**, **7**, **1**.

   ```
   Security
   1.Function Lock
   ```

2. Press ▲ or ▼ to choose `Setup ID`.
   Press **OK**.

3. Enter the administrator password.
   Press **OK**.

4. Press ▲ or ▼ to choose `Public`.
   Press **OK**.

5. Press ▲ or ▼ to choose `On` or `Off` for `Fax Tx`.
   Press **OK**.
   After you have set `Fax Tx`, repeat this step for `Fax Rx`, `Copy`, `Scan`, `USB Direct`, `PC Print` and `Color Print`. When the LCD shows `Exit`, press **OK**.

6. Press **Stop/Exit**.

## Setting up restricted users

You can set up users with restrictions and a password for functions that are available to them. You can set up more advanced restrictions, such as by page count or PC user login name, through Web Based Management. (For more information, see the *Network User's Guide* on the CD-ROM.) You can set up to 25 restricted users with restrictions and a password.

1. Press **Menu**, **1**, **7**, **1**.

```
Security
1.Function Lock
```

2. Press ▲ or ▼ to choose `Setup ID`.
   Press **OK**.
3. Enter the administrator password.
   Press **OK**.
4. Press ▲ or ▼ to choose `User01`.
   Press **OK**.
5. Use the numeric keys to enter the user name. (See *Entering text* on page 219.)
   Press **OK**.
6. Enter a four-digit password for the user.
   Press **OK**.
7. Press ▲ or ▼ to choose `On` or `Off` for `Fax Tx`.
   Press **OK**.
   After you have set `Fax Tx`, repeat this step for `Fax Rx`, `Copy`, `Scan`, `USB Direct`, `PC Print` and `Color Print`. When the LCD shows `Exit`, press **OK**.
8. Repeat steps ❹ to ❼ for entering each additional user and password.
9. Press **Stop/Exit**.

**Note**

You cannot use the same name as another user's name.

## Turning Secure Function Lock on/off

If you enter the wrong password, the LCD will show `Wrong Password`. Re-enter the correct password.

Turning **Secure Function Lock** on

1. Press **Menu**, **1**, **7**, **1**.

```
Security
1.Function Lock
```

2. Press ▲ or ▼ to choose `Lock Off→On`.
   Press **OK**.
3. Enter your four-digit administrator password.
   Press **OK**.

Turning **Secure Function Lock** off

1. Press **Menu**, **1**, **7**, **1**.

```
Security
1.Function Lock
```

2. Press ▲ or ▼ to choose `Lock On→Off`.
   Press **OK**.
3. Enter your four-digit administrator password.
   Press **OK**.

## Switching Users

This setting allows you to switch between registered restricted users or Public mode when Secure Function Lock is turned on.

### Changing to the restricted user Mode

1. Hold down **Shift** as you press **Secure**.

```
Change ID
user 1
```

2. Press ▲ or ▼ to choose your name. Press **OK**.

3. Enter your four-digit password. Press **OK**.

**Note**

If you press a Mode key that is restricted, `Access Denied` will appear on the LCD and then the machine will ask your name. If you are a restricted user with access to this Mode, press ▲ or ▼ to choose your name and enter your four-digit password.

### Changing to the Public Mode

After a restricted user has finished using the machine, it will return to the Public setting within the same time as the Mode Timer setting (**Menu**, **1**, **1**). (See *Mode Timer* on page 25.) You can also exit from the restricted user mode by pressing the current Mode key you are in. Then LCD will ask you `Go to Public?`.

Press **1** to choose `1. Yes`.

# Memory Security (MFC-9125CN only)

Memory Security lets you prevent unauthorized access to the machine.

While Memory Security is on, the following operations are available:

- Receiving faxes into memory (limited by memory capacity)
- Fax Forwarding (if Fax Forwarding was already on)
- Paging (if Paging was already on)
- Remote Retrieval (if Fax Storage was already on)

While Memory Security is on, the following operations are NOT available:

- Printing received faxes
- Sending faxes
- Copying
- PC printing
- Scanning
- PC Fax Receive

**Note**

- To print the faxes in memory, turn off Memory Security.
- You must turn off PC Fax Receive before you can turn on Memory Security. (See *Turning off Remote Fax Options* on page 75.)

## Setting up the password

**Note**

- If you have already set the password, you will not need to set it, again.
- If you forget the Memory Security password, please call Brother Customer Service (See *Brother numbers* on page i.).

1. Press **Menu**, **1**, **7**, **1**.

```
Security
1.Mem Security
```

2. Enter a four-digit number for the password using numbers 0-9.
   Press **OK**.
3. Re-enter the password when the LCD shows `Verify:`.
   Press **OK**.
4. Press **Stop/Exit**.

## Changing your memory security password

1. Press **Menu**, **1**, **7**, **1**.

```
Security
1.Mem Security
```

2. Press ▲ or ▼ to choose `Set Password`.
   Press **OK**.
3. Enter your four-digit password.
   Press **OK**.
4. Enter a four-digit number for the new password.
   Press **OK**.
5. Re-enter the password when the LCD shows `Verify:`.
   Press **OK**.
6. Press **Stop/Exit**.

## Turning memory security on/off

If you enter the wrong password when following the instructions below, the LCD will show `Wrong Password`. Re-enter the correct password.

### Turning memory security on

1. Press **Menu**, **1**, **7**, **1**.

```
Security
1.Mem Security
```

2. Press ▲ or ▼ to choose `Set Security`.
   Press **OK**.
3. Enter your registered four-digit password.
   Press **OK**.
   The machine goes offline and the LCD shows `Secure Mode`.

**Note**

If there is a power failure the data will stay in memory for up to 60 hours.

### Turning memory security off

1. Press **Menu**.
   Enter the registered four-digit password.
   Press **OK**.
2. Memory Security is automatically turned off and the LCD shows the date and time.

**Note**

If you enter the wrong password, the LCD shows `Wrong Password` and stays offline. The machine will stay in Secure Mode until the registered password is entered.

# Setting Lock

Setting Lock lets you set a password to stop other people from accidentally changing your machine settings.

Make a careful note of your password. If you forget it, you will have to reset the passwords stored in the machine. Please call your administrator or Brother Customer Service.

While Setting Lock is `On`, you cannot change the following settings without a password:

- Date/Time
- Station ID
- Quick Dial settings
- Mode Timer
- Paper Type
- Paper Size
- Volume
- Auto Daylight
- Ecology
- LCD Contrast
- Setting Lock
- Secure Function Lock (MFC-9325CW)
- Memory Security (MFC-9125CN)
- Dial Restriction

## Setting up the password

1. Press **Menu**, **1**, **7**, **2**.

```
Security
2.Setting Lock
```

2. Enter a four-digit number for the password using numbers 0-9.
   Press **OK**.
3. Re-enter your password when the LCD shows `Verify:`.
   Press **OK**.
4. Press **Stop/Exit**.

## Changing your Setting Lock password

1. Press **Menu**, **1**, **7**, **2**.

```
Security
2.Setting Lock
```

2. Press ▲ or ▼ to choose `Set Password`.
   Press **OK**.
3. Enter your four-digit password.
   Press **OK**.
4. Enter a four-digit number for the new password.
   Press **OK**.
5. Re-enter your new password when the LCD shows `Verify:`.
   Press **OK**.
6. Press **Stop/Exit**.

## Turning Setting Lock on/off

If you enter the wrong password when following the instructions below, the LCD will show `Wrong Password`. Re-enter the correct password.

**Turning Setting Lock on**

1. Press **Menu**, **1**, **7**, **2**.

```
Security
2.Setting Lock
```

2. Press ▲ or ▼ to choose `On`.
   Press **OK**.
3. Enter your four-digit password.
   Press **OK**.
4. Press **Stop/Exit**.

**Turning Setting Lock off**

1. Press **Menu**, **1**, **7**, **2**.

```
Security
2.Setting Lock
```

2. Enter your four-digit password.
   Press **OK** twice.
3. Press **Stop/Exit**.

# Restricting dialing

This feature is to prevent users from sending a fax or call to a wrong number by mistake. You can set the machine to restrict dialing by using the dial pad, One Touch or Speed Dial.

If you choose `Off`, the machine does not restrict any dialing method.

If you choose `Enter # twice`, the machine will prompt you to re-enter the number, and then if you re-enter the same number correctly, the machine will start dialing. If you re-enter the wrong number, the LCD will show an error message.

If you choose `On`, the machine will restrict all fax sending and outbound calls.

## Dial pad restriction

1. Press **Menu**, **2**, **6**, **1**.

```
Dial Restrict.
1.Dial Pad
```

2. Press ▲ or ▼ to choose `Off`, `Enter # twice` or `On`.
   Press **OK**.
3. Press **Stop/Exit**.

## One Touch restriction

1. Press **Menu**, **2**, **6**, **2**.

```
Dial Restrict.
2.One Touch Dial
```

2. Press ▲ or ▼ to choose `Off`, `Enter # twice` or `On`.
   Press **OK**.
3. Press **Stop/Exit**.

## Speed Dial restriction

1. Press **Menu**, **2**, **6**, **3**.

```
Dial Restrict.
3.Speed Dial
```

2. Press ▲ or ▼ to choose `Off`, `Enter # twice` or `On`.
   Press **OK**.

3. Press **Stop/Exit**.

### Note

- The `Enter # twice` setting will not work if you use an external phone or press **Hook** before entering the number. You will not be asked to re-enter the number.
- You can not restrict dialing when you use **Redial/Pause**.
- If you chose `On` or `Enter # twice`, you can not use the Broadcasting feature and can not combine quick dial numbers when dialing.

Section II

# Fax


| | |
|---|---|
| **Sending a fax** | 38 |
| **Receiving a fax** | 46 |
| **Telephone services and external devices** | 53 |
| **Dialing and storing numbers** | 63 |
| **Remote Fax Options (black & white only)** | 72 |
| **Polling** | 79 |
| **Printing reports** | 81 |

# 5 Sending a fax

## How to fax

### Entering fax mode

To enter fax mode press (**FAX**), and the key will glow blue.

### Sending a fax from the ADF

Using the ADF to send your faxes is the easiest way. To cancel a fax in progress press **Stop/Exit**.

1. Make sure you are in Fax mode .
2. Place your document *face up*, top edge first in the ADF until the LCD display changes and you feel it touch the rollers.
3. Dial the fax number. (See *How to dial* on page 63.)
4. Press **Black Start** or **Color Start**.
   - If you press **Black Start**, the machine scans the pages into memory and then sends the document.
   - If you press **Color Start**, the machine starts dialing and sends the document in real time.

**Note**

If an `Out of Memory` message appears while scanning a document into memory, press **Stop/Exit** to cancel or **Black Start** to send the scanned pages.

### Sending a fax from the scanner glass

You can use the scanner glass to fax the pages of a book, or a single page at a time. The documents can be up to Letter or A4 size. Press **Stop/Exit** to cancel a fax in progress.

1. Make sure you are in Fax mode .
2. Place your document *face down* on the scanner glass.
3. Dial the fax number. (See *How to dial* on page 63.)
4. Press **Black Start** or **Color Start**.
   - If you press **Black Start**, the machine starts scanning the first page. Go to step ❺.
   - If you press **Color Start**, the machine starts sending. Go to step ❼.
5. After the machine scans the page, the LCD will prompt you to choose one of the options below:

```
Next Page?
1.Yes 2.No(Send)
```

   - Press **1** to send another page. Go to step ❻.
   - Press **2** or **Black Start** to send the document. Go to step ❼.
6. Place the next page on the scanner glass, press **OK**. Repeat steps ❺ and ❻ for each additional page.

```
Set Next Page
Then Press OK
```

7 Your machine will automatically send the fax.

**Note**

When faxing multiple pages from the scanner glass, real time transmission should be set to `Off`. (See *Real Time Transmission* on page 43.)

## Faxing A4 size documents from the scanner glass

When faxing A4 size documents, you will need to set the scan glass size to `A4`; otherwise, a portion of your faxes will be missing.

1 Make sure you are in Fax mode .

2 Press **Menu**, **1**, **8**, **1**.

```
Document Scan
1.Glass ScanSize
```

3 Press ▲ or ▼ to choose `A4`.
Press **OK**.

4 Press **Stop/Exit**.

## Canceling a fax in progress

Press **Stop/Exit** to cancel the fax. If you press **Stop/Exit** while the machine is dialing or sending, the LCD will show `1.Clear  2.Exit`, press **1** to cancel the fax.

# Broadcasting (black & white only)

Broadcasting lets you send the same fax message to more than one fax number. You can include Groups, One Touch, Speed Dial numbers and up to 50 manually dialed numbers in the same broadcast.

You can broadcast up to 258 different numbers. This will depend on how many groups, access codes or credit card numbers you have stored, and on how many delayed or stored faxes in memory.

**Note**

Use ▼ (**Address Book**) to help you choose numbers easily.

1 Make sure you are in Fax mode .

2 Load your document.

3 Enter a number.
Press **OK**.
You can use either a One Touch, Speed Dial, a Group number, or a number manually entered using the dial pad. (See *How to dial* on page 63.)

4 Repeat step ❸ until you have entered all the fax numbers you want to broadcast to.

5 Press **Black Start**.

After the broadcast is finished the machine will print a broadcast report to let you know the results.

**Note**

The scan profile of the One Touch, Speed Dial or Group number you chose first will be applied to the broadcast.

## Canceling a Broadcast in progress

1. Press **Menu**, **2**, **7**.
   The LCD will show the Broadcast job number followed by the fax number (or name) being dialed (for example, `#001 0123456789`).

2. Press **OK**.
   The LCD will show the following message:

   ```
   #001 0123456789
   1.Clear  2.Exit
   ```

3. Press **1** to cancel the fax number being dialed.
   The LCD will then show the following message:

   ```
   Broadcast #001
   1.Clear  2.Exit
   ```

4. To cancel the Broadcast, press **1**.

5. Press **Stop/Exit**.

# Additional sending operations

## Sending faxes using multiple settings

Before you send a fax, you can change any combination of these settings: contrast, resolution, overseas mode, delayed fax timer, polling transmission, real time transmission or cover page settings.

1. Make sure you are in Fax mode .
   After each setting is accepted, the LCD asks if you want to enter more settings:

   ```
   Other Settings
   1.Yes 2.No
   ```

2. Do one of the following:
   - To choose more settings, press **1**.
     The LCD returns to the `Setup Send` menu so you can choose another setting.
   - If you have finished choosing settings, press **2** and go to the next step for sending your fax.

## Electronic cover page (black & white only)

This feature will *not* work unless you have already programmed your Station ID. (See the *Quick Setup Guide*.)

You can automatically send a cover page with every fax. Your cover page includes your Station ID, a comment, and the name (or number) stored in the One Touch or Speed Dial memory.

By choosing `Next Fax:On` you can also display the number of pages on the cover page.

You can choose one of the following preset comments.

`1.Comment Off`

`2.Please Call`

`3.Urgent`

`4.Confidential`

Instead of using one of the preset comments, you can enter two personal messages of your own, up to 26 characters long. Use the chart on page 219 for help entering characters.

(See *Composing your own comments* on page 41.)

`5.`(User Defined)

`6.`(User Defined)

### Composing your own comments

You can set up two comments of your own.

1. Make sure you are in Fax mode .
2. Press **Menu**, **2**, **2**, **8**.

   ```
   Setup Send
   8.Coverpage Msg
   ```

3. Press ▲ or ▼ to choose `5` or `6` to store your own comment.
   Press **OK**.
4. Enter your own comment using the dial pad.
   Press **OK**.

Use the chart on page 219 for help entering characters.

### Send a cover page for the next fax

If you want to send a cover page only for the next fax, your machine will ask you to enter the number of pages you are sending so it can be printed on the cover page.

1. Make sure you are in Fax mode .
2. Load your document.
3. Press **Menu**, **2**, **2**, **7**.

   ```
   Setup Send
   7.Coverpg Setup
   ```

4. Press ▲ or ▼ to choose `Next Fax:On` (or `Next Fax:Off`).
   Press **OK**.
5. Press ▲ or ▼ to choose a comment.
   Press **OK**.
6. Enter two digits to show the number of pages you are sending.
   Press **OK**.
   For example, enter **0**, **2** for 2 pages or **0**, **0** to leave the number of pages blank.
   If you make a mistake, press ◀ or **Clear/Back** to back up and re-enter the number of pages.

### Send a cover page for all faxes

You can set the machine to send a cover page whenever you send a fax.

1. Make sure you are in Fax mode .
2. Press **Menu**, **2**, **2**, **7**.

```
Setup Send
7.Coverpg Setup
```

3. Press ▲ or ▼ to choose `On` (or `Off`). Press **OK**.
4. Press ▲ or ▼ to choose a comment. Press **OK**.

### Using a printed cover page

If you want to use a printed cover page that you can write on, you can print the sample page and attach it to your fax.

1. Make sure you are in Fax mode .
2. Press **Menu**, **2**, **2**, **7**.

```
Setup Send
7.Coverpg Setup
```

3. Press ▲ or ▼ to choose `Print Sample`. Press **OK**.
4. Press **Start**.
5. After the machine prints a copy of your cover page, press **Stop/Exit**.

## Contrast

For most documents the default setting of `Auto` will give the best results. It automatically chooses the suitable contrast for your document.

If your document is very light or dark, changing the contrast may improve the quality of the fax.

Use `Dark` to make the faxed document lighter.

Use `Light` to make the faxed document darker.

1. Make sure you are in Fax mode .
2. Load your document.
3. Press **Menu**, **2**, **2**, **1**.

```
Setup Send
1.Contrast
```

4. Press ▲ or ▼ to choose `Auto`, `Light` or `Dark`. Press **OK**.

**Note**

Even if you choose `Light` or `Dark`, the machine will send the fax using the `Auto` setting if you choose `Photo` as the Fax Resolution.

## Changing Fax Resolution

The quality of a fax can be improved by changing the Fax Resolution. Resolution can be changed for the next fax or for all faxes.

### To change the Fax Resolution setting for the *next* fax

1. Make sure you are in Fax mode .
2. Load your document.
3. Press **Resolution**, then ▲ or ▼ to choose the resolution. Press **OK**.

### To change the default Fax Resolution setting

1. Make sure you are in Fax mode .
2. Press **Menu**, **2**, **2**, **2**.

```
Setup Send
2.Fax Resolution
```

3. Press ▲ or ▼ to choose the resolution you want.
   Press **OK**.

**Note**

You can choose four different resolution settings for black & white faxes and two for color.

**Black & white:**

`Standard`: Suitable for most typed documents.

`Fine`: Good for small print and transmits a little slower than Standard resolution.

`S.Fine`: Good for small print or artwork and transmits slower than `Fine` resolution.

`Photo`: Use when the document has varying shades of gray or is a photograph. This has the slowest transmission time.

**Color:**

`Standard`: Suitable for most typed documents.

`Fine`: Use when the document is a photograph. The transmission time is slower than `Standard` resolution.

If you choose `S.Fine` or `Photo` and then use the **Color Start** key to send a fax, the machine will send the fax using the `Fine` setting.

## Dual access (black & white only)

You can dial a number, and start scanning the fax into memory—even when the machine is sending from memory, receiving faxes or printing PC data. The LCD will show the new job number.

The number of pages you can scan into the memory will vary depending on the data that is printed on them.

**Note**

If you get an `Out of Memory` message while scanning the first page of a fax, press **Stop/Exit** to cancel scanning. If you get an `Out of Memory` message while scanning a subsequent page, you can press **Black Start** to send the pages scanned so far, or press **Stop/Exit** to cancel the operation.

## Real Time Transmission

When you are sending a fax, the machine will scan the documents into the memory before sending it. Then, as soon as the telephone line is free, the machine will start dialing and sending.

Sometimes, you may want to send an important document immediately, without waiting for memory transmission. You can set `Real Time TX` to `On` for all documents or `Next Fax:On` for the next fax only.

**Note**

- If the memory is full and you are sending a black and white fax from the ADF, the machine will send the document in real time (even if Real Time TX is set to Off). If the memory is full, faxes from the scanner glass cannot be sent until you clear some of the memory.
- In Real Time Transmission, the automatic redial feature does not work when using the scanner glass.

### Sending in real time for all faxes

1. Make sure you are in Fax mode .
2. Press **Menu**, **2**, **2**, **5**.

```
Setup Send
5.Real Time TX
```

3. Press ▲ or ▼ to choose `On`.
   Press **OK**.

### Sending in real time for the next fax only

1. Make sure you are in Fax mode .
2. Press **Menu**, **2**, **2**, **5**.

```
Setup Send
5.Real Time TX
```

3. Press ▲ or ▼ to choose `Next Fax:On`.
   Press **OK**.

## Overseas Mode

If you are having difficulty sending a fax overseas due to a bad connection, then turning on Overseas Mode may help.

This is a temporary setting, and will only be active for your next fax.

1. Make sure you are in Fax mode .
2. Load your document.
3. Press **Menu**, **2**, **2**, **9**.

```
Setup Send
9.Overseas Mode
```

4. Press ▲ or ▼ to choose `On` or `Off`.
   Press **OK**.

## Delayed Fax (black & white only)

You can store up to 50 faxes in the memory to be sent within a twenty four hour period.

1. Make sure you are in Fax mode .
2. Load your document.
3. Press **Menu**, **2**, **2**, **3**.

```
Setup Send
3.Delayed Fax
```

4. Enter the time you want the fax to be sent (in 24-hour format).
   *(For example, enter 19:45 for 7:45 PM)*
   Press **OK**.

**Note**

The number of pages you can scan into the memory depends on the amount of data printed on each page.

## Delayed batch transmission (black & white only)

Before sending the delayed faxes, your machine will help you economize by sorting all the faxes in the memory by destination and scheduled time.

All delayed faxes that are scheduled to be sent at the same time to the same fax number will be sent as one fax to save transmission time.

1. Make sure you are in Fax mode .
2. Press **Menu**, **2**, **2**, **4**.

```
Setup Send
4.Batch TX
```

3. Press ▲ or ▼ to choose `On` or `Off`.
   Press **OK**.
4. Press **Stop/Exit**.

## Checking and canceling waiting jobs

Check which jobs are still waiting in the memory to be sent. If there are no jobs, the LCD will show `No Jobs Waiting`. You can cancel a fax job that is stored and waiting in the memory.

1. Press **Menu**, **2**, **7**.
   The number of jobs still to be sent will be displayed.
2. Do one of the following:
   - Press ▲ or ▼ to scroll though the waiting jobs, press **OK** to choose a job, and then press **1** to cancel it.
   - Press **2** to exit without canceling.
3. When you have finished, press **Stop/Exit**.

## Sending a fax manually

### Manual transmission

Manual transmission lets you hear the dialing, ringing and fax-receiving tones while sending a fax.

1. Make sure you are in Fax mode .
2. Load your document.
3. Press **Hook** and listen for a dial tone. Or pick up the handset of the external telephone and listen for a dial tone.
4. Dial the fax number you want to call.
5. When you hear the fax tone, press **Black Start** or **Color Start**.
   - If you are using the scanner glass, press **1** to send a fax.
6. Replace the handset of an external telephone.

## Sending a fax at the end of a conversation

At the end of a conversation you can send a fax to the other party before you both hang up.

1. Ask the other party to wait for fax tones (beeps) and then to press the Start or Send key before hanging up.
2. Make sure you are in Fax mode .
3. Load your document.
4. Press **Black Start** or **Color Start**.
   - If you are using the scanner glass, press **1** to send a fax.
5. Replace the handset of an external telephone.

## Out of memory message

If you get an `Out of Memory` message while scanning the first page of a fax, press **Stop/Exit** to cancel the fax.

If you get an `Out of Memory` message while scanning a subsequent page, you will have the option to press **Black Start** to send the pages scanned so far, or to press **Stop/Exit** to cancel the operation.

**Note**

If you get an `Out of Memory` message while faxing and you do not want to delete your stored faxes to clear the memory, you can send the fax in real time. (See *Real Time Transmission* on page 43.)

# 6 Receiving a fax

## Choose the correct Receive Mode

The correct Receive Mode is determined by the external devices and telephone subscriber services (Voice Mail, Distinctive Ring, etc.) you have (or will be using) on the same line as the Brother machine.

**Will you be using a Distinctive Ring number for receiving faxes?**

Brother uses the term "Distinctive Ring" but different telephone companies may have other names for this service such as Custom Ringing, RingMaster, Personalized Ring, Teen Ring, Ident-A-Ring, Ident-A-Call, Data Ident-A-Call, Smart Ring and SimpleBiz Fax & Alternate Number Ringing. (See *Distinctive Ring* on page 54 for instructions on setting up your machine using this feature.)

**Will you be using Voice Mail on the same telephone line as your Brother machine?**

If you have Voice Mail on the same telephone line as your Brother machine, there is a strong possibility that Voice Mail and the Brother machine will conflict with each other when receiving incoming calls. (See *Voice Mail* on page 53 for instructions on setting up your machine using this service.)

**Will you be using a Telephone Answering Device on the same telephone line as your Brother machine?**

Your external telephone answering device (TAD) will automatically answer every call. Voice messages are stored on the external TAD and fax messages are printed. Choose `External TAD` as your receive mode. (See *Connecting an external TAD (telephone answering device)* on page 57.)

**Will you be using your Brother machine on a dedicated fax line?**

Your machine automatically answers every call as a fax. Choose `Fax Only` as your receive mode. (See *Fax Only* on page 48.)

**Will you be using your Brother machine on the same line as your telephone?**

**Do you want to receive voice calls and faxes automatically?**

The `Fax/Tel` receive mode is used when sharing the Brother machine and your telephone on the same line. Choose `Fax/Tel` as your receive mode. (See *Fax/Tel* on page 48.)

**Important Note:** You can not receive voice messages on either Voice Mail or an answering machine when choosing the `Fax/Tel` mode.

**Do you expect to receive very few faxes?**

Choose `Manual` as your receive mode. You control the telephone line and must answer every call yourself. (See *Manual* on page 48.)

To set the receive mode follow the instructions below:

1. Press **Menu**, **0**, **1**.

```
Initial Setup
1.Receive Mode
```

2. Press ▲ or ▼ to choose the receive mode.
   Press **OK**.

3. Press **Stop/Exit**.

The LCD will display the current receive mode.

# Using receive modes

Some receive modes answer automatically (`Fax Only` and `Fax/Tel`). You may want to change the Ring Delay before using these modes. (See *Ring Delay* on page 49.)

## Fax Only

`Fax Only` mode will automatically answer every call as a fax.

## Fax/Tel

`Fax/Tel` mode helps you automatically manage incoming calls, by recognizing whether they are fax or voice calls and handling them in one of the following ways:

- Faxes will be automatically received.
- Voice calls will start the F/T ring to tell you to pick up the line. The F/T ring is a fast double ring made by your machine.

(Also see *F/T Ring Time (Fax/Tel mode only)* on page 49 and *Ring Delay* on page 49.)

## Manual

`Manual` mode turns off all automatic answering functions unless you are using the Distinctive Ring Receive feature.

To receive a fax in Manual mode lift the handset of the external telephone or press **Hook**. When you hear fax tones (short repeating beeps), press **Black Start**, and then press **2** to receive a fax. You can also use the Easy Receive feature to receive faxes by lifting a handset on the same line as the machine.

(Also see *Easy Receive* on page 50.)

## External TAD

`External TAD` mode lets an external answering device manage your incoming calls. Incoming calls will be handled in the following ways:

- Faxes will be automatically received.
- Voice callers can record a message on the external TAD.

(For more information see *Connecting an external TAD (telephone answering device)* on page 57.)

# Receive Mode settings

## Ring Delay

The Ring Delay setting sets the number of times the machine rings before it answers in `Fax Only` and `Fax/Tel` modes.

If you have external or extension telephones on the same line as the machine, keep the Ring Delay setting of 4. (See *Easy Receive* on page 50.)

1. Make sure you are in Fax mode .
2. Press **Menu**, **2**, **1**, **1**.

```
Setup Receive
1.Ring Delay
```

3. Press ▲ or ▼ to choose `00`, `01`, `02`, `03` or `04` for how many times the line rings before the machine answers.
   Press **OK**.
4. Press **Stop/Exit**.

**Note**

Choose `00` in step ❸ to have the machine answer immediately.

## F/T Ring Time (Fax/Tel mode only)

When somebody calls your machine, you and your caller will hear the normal telephone ring sound. The number of rings is set by the Ring Delay setting.

If the call is a fax, then your machine will receive it; however, if it is a voice call the machine will sound the F/T ring (a fast double-ring) for the time you have set in the F/T Ring Time setting. If you hear the F/T ring it means that you have a voice caller on the line.

Because the F/T ring is made by the machine, extension and external telephones will *not* ring; however, you can still answer the call on any telephone. (For more information see *Using Remote Codes* on page 61.)

1. Make sure you are in Fax mode .
2. Press **Menu**, **2**, **1**, **2**.

```
Setup Receive
2.F/T Ring Time
```

3. Press ▲ or ▼ to choose how long the machine will ring to alert you that you have a voice call (20, 30, 40 or 70 seconds).
   Press **OK**.
4. Press **Stop/Exit**.

## Easy Receive

### If Easy Receive is On:

The machine can receive a fax automatically, even if you answer the call. When you see Receiving on the LCD or hear a click on the phone line through the handset you are using, just replace the handset. Your machine will do the rest.

### If Easy Receive is Off:

If you are at the machine and answer a fax call first by lifting the external handset, then press **Black Start** or **Color Start**, and then press **2** to receive.

If you answered at an extension telephone press ***51**.

**Note**

- If this feature is set to On, but your machine does not connect a fax call when you lift an extension telephone handset, press the fax receive code ***51**.
- If you send faxes from a computer on the same telephone line and the machine intercepts them, set Easy Receive to Off.

1. Make sure you are in Fax mode .
2. Press **Menu**, **2**, **1**, **3**.

```
Setup Receive
3.Easy Receive
```

3. Press ▲ or ▼ to choose On or Off.
   Press **OK**.
4. Press **Stop/Exit**.

## Setting the Print Density

You can adjust the Print Density setting to make your printed pages darker or lighter.

1. Make sure you are in Fax mode .
2. Press **Menu**, **2**, **1**, **6**.

```
Setup Receive
6.Print Density
```

3. Press ▲ to make the print darker.
   Or, press ▼ to make the print lighter.
   Press **OK**.
4. Press **Stop/Exit**.

# Additional receiving operations

## Printing a reduced incoming fax

If you choose On, the machine automatically reduces each page of an incoming fax to fit on one page of A4, Letter, Legal or Folio size paper.

The machine calculates the reduction ratio by using the page size of the fax and your Paper Size setting (**Menu**, **1**, **2**, **2**).

1. Make sure you are in Fax mode .
2. Press **Menu**, **2**, **1**, **5**.

```
Setup Receive
5.Auto Reduction
```

3. Press ▲ or ▼ to choose On or Off. Press **OK**.
4. Press **Stop/Exit**.

## Setting the Fax Receive Stamp (black & white only)

You can set the machine to print the received date and time in the top center of each received fax page.

1. Make sure you are in Fax mode .
2. Press **Menu**, **2**, **1**, **8**.

```
Setup Receive
8.Fax Rx Stamp
```

3. Press ▲ or ▼ to choose On or Off. Press **OK**.
4. Press **Stop/Exit**.

**Note**

- The received time and date will not appear when using Internet Fax.
- Make sure you have set the current date and time in the machine. (See the Quick Setup Guide.)

## Receiving a fax at the end of a conversation

At the end of a conversation you can ask the other party to send you a fax before you both hang up.

1. Ask the other party to place the document in their machine and to press the Start or Send key.
2. When you hear the CNG tones (slowly repeating beeps), press **Black Start** or **Color Start**.
3. Press **2** to receive a fax.
4. Replace the external handset.

## Printing a fax from the memory

If you are using the Fax Storage feature (**Menu**, **2**, **5**, **1**), you can still print a fax from the memory when you are at your machine. (See *Fax Storage* on page 73.)

1. Press **Menu**, **2**, **5**, **3**.

```
Remote Fax Opt
3.Print Fax
```

2. Press **Start**.
3. Press **Stop/Exit**.

## Receiving faxes into memory when the paper tray is empty (black & white only)

As soon as the paper tray becomes empty during fax reception, the LCD shows `No Paper` and begins receiving faxes into the machine's memory. Put some paper in the paper tray. (See *Loading paper and print media* on page 11.)

The machine will carry on receiving the fax, with the remaining pages being stored in memory, if enough memory is available.

Further incoming faxes will also be stored into memory until the memory is full. When the memory is full the machine will stop automatically answering calls. To print the faxes, put fresh paper in the tray and press **Black Start** or **Color Start**.

# 7 Telephone services and external devices

## Telephone line services

### Voice Mail

If you have Voice Mail on the same telephone line as your Brother machine, Voice Mail and the Brother machine will conflict with each other when receiving incoming calls.

For example, if your Voice Mail is set to answer after 4 rings and your Brother machine is set to answer after 2 rings, then your Brother machine will answer first. This will prevent callers from being able to leave a message in your Voice Mail.

Similarly, if your Brother machine is set to answer after 4 rings and your Voice Mail is set to answer after 2 rings, then your Voice Mail will answer first. This will prevent your Brother machine from being able to receive an incoming fax, since Voice Mail cannot transfer the incoming fax back to the Brother machine.

To avoid conflicts between your Brother machine and your Voice Mail service, do one of the following:

Get the Distinctive Ring service from your telephone company. Distinctive Ring is a feature of your Brother machine that allows a person with one line to receive fax and voice calls through two different telephone numbers on that one line. Brother uses the term 'Distinctive Ring,' but telephone companies market the service under a variety of names, such as Custom Ringing, Personalized Ring, Smart Ring, RingMaster, Ident-A-Ring, Ident-A-Call, Data Ident-A-Call, Teen Ring, and SimpleBiz Fax & Alternate Number Ringing. This service establishes a second telephone number on the same line as your existing telephone number, and each number has its own ring pattern. Typically, the original number rings with the standard ring pattern and is used for receiving voice calls, and the second number rings with a different ring pattern and is used for receiving faxes. (See *Distinctive Ring* on page 54.)

**OR**

Set your Brother machine's Receive Mode to "Manual". Manual Mode requires that you answer every incoming call if you want to be able to receive a fax. If the incoming call is a telephone call, then complete the call as you normally would. If you hear fax sending tones you must transfer the call to the Brother machine. (See *Using external and extension telephones* on page 60.) Unanswered fax and voice calls will go to your Voice Mail. (To set the machine in **MANUAL** Mode, see *Choose the correct Receive Mode* on page 46.)

## Distinctive Ring

Distinctive Ring is a function of your Brother machine that allows a person with one line to receive fax and voice calls through two different phone numbers on that one line. Brother uses the term "Distinctive Ring," but telephone companies market the service under a variety of names, such as Smart Ring, Ring Master or Ident-a-Ring. This service establishes a second telephone number on the same line as your existing telephone number, and each number has its own ring pattern. Typically, the original number rings with the standard ring pattern and is used for receiving voice calls, and the second number rings with a different ring pattern and is used for receiving faxes.

**Note**

- You must pay for your telephone company's Distinctive Ring service before you program the machine to work with it.
- Please call your telephone company for availability and rates.

### What does your telephone company's 'Distinctive Ring' do?

Your telephone company's Distinctive Ring service allows you to have more than one number on the same telephone line. **If you need more than one telephone number, it is cheaper than paying for an extra line.** Each telephone number has its own distinctive ring pattern, so you will know which telephone number is ringing. This is one way you can have a separate telephone number for your machine.

**Note**

Please call your telephone company for availability and rates.

### What does Brother's 'distinctive ring' do?

The Brother machine has a Distinctive Ring feature that allows you to use your machine to take full advantage of the telephone company's Distinctive Ring service. The new telephone number on your line can just receive faxes.

**Note**

You must pay for your telephone company's Distinctive Ring service before you program the machine to work with it.

### Do you have Voice Mail?

If you have Voice Mail on the telephone line that you will install your new machine on, *there is a strong possibility that Voice Mail and the machine will conflict with each other while receiving incoming calls.* **However, the Distinctive Ring feature allows you to use more than one number on your line, so both Voice Mail and the machine can work together without any problems.** If each one has a separate telephone number, neither will interfere with the other's operations.

If you decide to get the Distinctive Ring service from the telephone company, you will need to follow the directions below to 'register' the new Distinctive Ring pattern they give you. This is so your machine can recognize its incoming calls.

**Note**

You can change or cancel the Distinctive Ring pattern at any time. You can switch it off temporarily, and turn it back on later. When you get a new fax number, make sure you reset this feature.

### Before you choose the ring pattern to register

You can only register one Distinctive Ring pattern with the machine. Some ring patterns cannot be registered. The ring patterns below are supported by your Brother machine. Register the one your telephone company gives you.

| Ring Pattern | Rings | |
|---|---|---|
| 1 | long-long | |
| 2 | short-long-short | |
| 3 | short-short-long | |
| 4 | very long (normal pattern) | |

**Note**

- Ring Pattern #1 is often called Short-Short and is the most commonly used.
- If the ring pattern you received is not on this chart, **please call your telephone company and ask for one that is shown**.

- The machine will only answer calls to its registered number.
- The first two rings are silent on the machine. This is because the fax must <<listen>> to the ring pattern (to compare it to the pattern that was ‘registered’). (Other telephones on the same line will ring.)
- If you program the machine properly, it will recognize the registered ring pattern of the ‘fax number’ within 2 ring patterns and then answer with a fax tone. When the ‘voice number’ is called, the machine will not answer.

### Registering the distinctive ring pattern Very important!

After you have set the Distinctive Ring feature to On, your Distinctive Ring number will receive faxes automatically. The receive mode is automatically set to `Manual` and you cannot change it to another receive mode while Distinctive Ring is set to On. This ensures the Brother machine will only answer the Distinctive Ring number and not interfere when your main telephone number is called.

1. Press **Menu**, **2**, **0**, **2**.

```
Miscellaneous
2.Distinctive
```

2. Press ▲ or ▼ to choose `Set`.
3. Press **OK**.
4. Press ▲ or ▼ to choose the prestored ring pattern you want to use.
   Press **OK**.
5. (You will hear each pattern as you scroll through the four patterns. Make sure you choose the pattern that the telephone company gave you.)
6. Press **Stop/Exit**.
   Distinctive Ring is now set to On.

### Turning off distinctive ring

1. Press **Menu**, **2**, **0**, **2**.

```
Miscellaneous
2.Distinctive
```

2. Press ▲ or ▼ to choose `Off`.
   Press **OK**.

3. Press **Stop/Exit**.

**Note**

If you do not want to receive faxes on your Distinctive Ring number, you can turn off Distinctive Ring. The machine will stay in `Manual` receive mode so you will need to set the Receive Mode again. (See *Choose the correct Receive Mode* on page 46.)

## Caller ID

The Caller ID feature lets you use the Caller ID subscriber service offered by many local telephone companies. Call your telephone company for details. This service shows the telephone number, or name if it is available, of your caller as the line rings.

After a few rings, the LCD will show the telephone number of your caller (and name, if available). Once you answer a call, the Caller ID information disappears from the LCD, but the call information stays stored in the Caller ID memory.

- You will see the first 16 characters of the number (or name).
- The `# Unavailable` message means the call originated outside your Caller ID service area.
- The `Private Call` message means the caller has intentionally blocked transmission of information.

You can print a list of the Caller ID information received by your machine. (See *Printing the Caller ID List* on page 57.)

**Note**

Caller ID service varies with different carriers. Call your local telephone company to find out about the kind of service available in your area.

### Viewing the Caller ID List

Your machine stores information for the last thirty calls in the Caller ID list. You can view or print this list. When the thirty-first call comes in to the machine, it replaces information about the first call.

1. Press **Menu**, **2**, **0**, **3**.

```
Miscellaneous
3.Caller ID
```

2. Press ▲ or ▼ to choose `Display#`. Press **OK**.
   The Caller ID of the last call will appear on the display. If no ID is stored, the beeper will sound and `No Caller ID` will appear on the display.

3. Press ▲ or ▼ to scroll through the Caller ID memory to choose the Caller ID you want to view, and then press **OK**.
   The LCD will show the caller's number or name and the date and time of the call.

4. To finish viewing, press **Stop/Exit**.

### Printing the Caller ID List

1. Press **Menu**, **2**, **0**, **3**.

```
Miscellaneous
3.Caller ID
```

2. Press ▲ or ▼ to choose `Print Report`. Press **OK**.
   If no ID is stored, the beeper will sound and `No Caller ID` will appear on the LCD.

3. Press **Black Start** or **Color Start**.

4. After printing has finished, press **Stop/Exit**.

# Connecting an external TAD (telephone answering device)

You can connect an external Telephone Answering Device (TAD) to the same line as your machine. When the TAD answers a call, your machine will “listen” for the CNG (fax calling) tones sent by a sending fax machine. If it hears them it will take over the call and receive the fax. If it does not hear them, it will let your TAD take a voice message and the display will show `Telephone`.

The external TAD must answer within four rings (we recommend you set it to two rings). This is because your machine cannot hear the CNG tones until the external TAD has picked up the call. The sending machine will send CNG tones for only eight to ten seconds longer. We do not recommend using the toll saver feature on your external TAD if it needs more than four rings to activate it.

Unless you are using Distinctive Ring, the TAD must be connected to the EXT. jack of the machine.

Before you connect an external TAD (telephone answering device), remove the protective cap (2) from the EXT. jack on the machine.

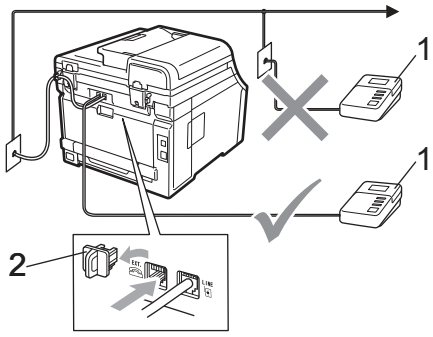


**1 TAD**

**2 Protective Cap**

**Note**

If you have problems receiving faxes, reduce the ring delay setting on your external TAD.

## Connections

The external TAD must be plugged into the back of the machine, into the jack labeled EXT. Your machine cannot work properly if you plug the TAD into a wall jack (unless you are using Distinctive Ring).

1. Plug the telephone line cord from the telephone wall jack into the back of the machine, in the jack labeled LINE.
2. Plug the telephone line cord from your external TAD into the back of the machine, in the jack labeled EXT. (Make sure this cord is connected to the TAD at the TAD's telephone line jack, and not its handset jack.)
3. Set your external TAD to four rings or less. (The machine's Ring Delay setting does not apply.)
4. Record the outgoing message on your external TAD.
5. Set the TAD to answer calls.
6. Set the Receive Mode to `External TAD`. (See *Choose the correct Receive Mode* on page 46.)

## Recording an outgoing message (OGM)

1. Record 5 seconds of silence at the beginning of your message. This allows your machine time to listen for fax tones.
2. Limit your speaking to 20 seconds.
3. End your 20-second message by giving your Fax Receive Code for people sending manual faxes. For example: "After the beep, leave a message or press ∗**51** and **Start** to send a fax."

**Note**

We recommend beginning your OGM with an initial 5 second silence because the machine cannot hear fax tones over a loud voice. You may try leaving out this pause, but if your machine has trouble receiving, then you should re-record the OGM to include it.

## Special line considerations

### Roll over telephone lines

A roll over telephone system is a group of two or more separate telephone lines that pass incoming calls to each other if they are busy. The calls are usually passed down or “rolled over” to the next available telephone line in a preset order.

Your machine can work in a roll over system as long as it is the last number in the sequence, so the call cannot roll away. Do not put the machine on any of the other numbers; when the other lines are busy and a second fax call is received, the fax call would be transferred to a line that does not have a fax machine. **Your machine will work best on a dedicated line.**

### Two-line telephone system

A two-line telephone system is nothing more than two separate telephone numbers on the same wall outlet. The two telephone numbers can be on separate jacks (RJ11) or combined into one jack (RJ14). Your machine must be plugged into an RJ11 jack. RJ11 and RJ14 jacks may be equal in size and appearance and both may contain four wires (black, red, green, yellow). To test the type of jack, plug in a two-line telephone and see if it can access both lines. If it can, you must separate the line for your machine. (See *Easy Receive* on page 50.)

### Converting telephone wall outlets

There are three ways to convert to an RJ11 jack. The first two ways may require assistance from the telephone company. You can change the wall outlets from one RJ14 jack to two RJ11 jacks. Or, you can have an RJ11 wall outlet installed and slave or jump one of the telephone numbers to it.

The third way is the easiest: Buy a triplex adapter. You can plug a triplex adapter into an RJ14 outlet. It separates the wires into two separate RJ11 jacks (Line 1, Line 2) and a third RJ14 jack (Lines 1 and 2). If your machine is on Line 1, plug the machine into L1 of the triplex adapter. If your machine is on Line 2, plug it into L2 of the triple adapter.

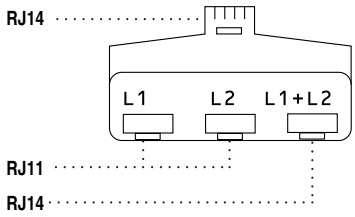


### Installing machine, external two-line TAD and two-line telephone

When you are installing an external two-line telephone answering device (TAD) and a two-line telephone, your machine must be isolated on one line at both the wall jack and at the TAD. The most common connection is to put the machine on Line 2, which is explained in the following steps. The back of the two-line TAD must have two telephone jacks: one labeled L1 or L1/L2, and the other labeled L2. You will need at least three telephone line cords, the one that came with your machine and two for your external two-line TAD. You will need a fourth line cord if you add a two-line telephone.

Place the two-line TAD and the two-line telephone next to your machine.

Plug one end of the telephone line cord for your machine into the L2 jack of the triplex adapter. Plug the other end into the LINE jack on the back of the machine.

Plug one end of the first telephone line cord for your TAD into the L1 jack of the triplex adapter. Plug the other end into the L1 or L1/L2 jack of the two-line TAD.

Plug one end of the second telephone line cord for your TAD into the L2 jack of the two-line TAD. Plug the other end into the EXT. jack on the left side of the machine.

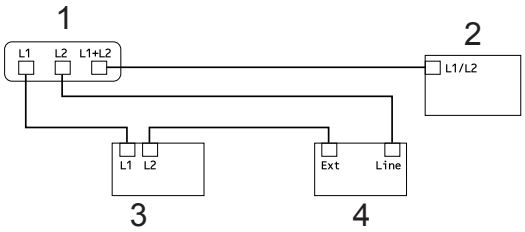


**1 Triplex Adapter**

**2 Two Line Telephone**

**3 External Two Line TAD**

**4 Machine**

You can keep two-line telephones on other wall outlets as always. There are two ways to add a two-line telephone to the machine's wall outlet. You can plug the telephone line cord from the two-line telephone into the L1+L2 jack of the triplex adapter. Or, you can plug the two-line telephone into the TEL jack of the two-line TAD.

## Multi-line connections (PBX)

We suggest you ask the company who installed your PBX to connect your machine. If you have a multi line system we suggest you ask the installer to connect the unit to the last line on the system. This prevents the machine being activated each time the system receives telephone calls. If all incoming calls will be answered by a switchboard operator we recommend that you set the Receive Mode to `Manual`.

We cannot guarantee that your machine will operate properly under all circumstances when connected to a PBX. Any difficulties with sending or receiving faxes should be reported first to the company who handles your PBX.

# External and extension telephones

## Using external and extension telephones

### Using extension telephones

If you answer a fax call at an extension telephone, you can make your machine receive the fax by pressing the Fax Receive Code ∗**51**.

If the machine answers a voice call and pseudo/double-rings for you to take over, you can take the call at an extension telephone by pressing the Telephone Answer Code **#51**. (See *F/T Ring Time (Fax/Tel mode only)* on page 49.)

### Using an external telephone (Connected to the EXT. jack of the machine)

If you answer a fax call at the external telephone connected to the EXT jack of the machine, you can make the machine receive the fax by pressing **Black Start** and choosing `Receive`.

If the machine answers a voice call and pseudo/double-rings for you to take over, you can take the call at the external telephone by pressing **Hook**.

### If you answer a call and no one is on the line:

You should assume that you're receiving a manual fax.

Press ∗**51** and wait for the chirp or until the LCD shows Receiving, and then hang up.

**Note**

You can also use the Easy Receive feature to make your machine automatically take the call. (See *Easy Receive* on page 50.)

## For Fax/Tel mode only

When the machine is in Fax/Tel mode, it will use the F/T Ring Time (pseudo/double-ringing) to alert you to pick up a voice call.

Lift the external telephone's handset, and then press **Hook** to answer.

If you are at an extension telephone, you will need to lift the handset during the F/T Ring Time and then press **#51** between the pseudo/double rings. If no one is on the line, or if someone wants to send you a fax, send the call back to the machine by pressing ∗**51**.

## Connecting an external or extension telephone

You can connect a separate telephone directly to your machine as shown in the diagram below.

Connect the telephone line cord to the jack labeled EXT.

Before you connect an external telephone, remove the protective cap (3) from the EXT. jack on the machine.

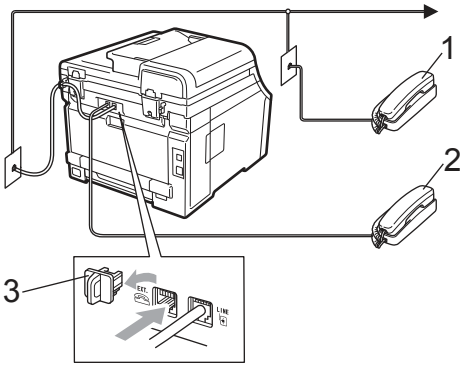


**1 Extension telephone**

**2 External telephone**

**3 Protective Cap**

When you are using an external telephone, the LCD shows `Telephone`.

## Using a non-Brother cordless external handset

If your non-Brother cordless telephone is connected to the EXT. jack of the machine (see page 61) and you typically carry the cordless handset elsewhere, it is easier to answer calls during the Ring Delay.

If you let the machine answer first, you will have to go to the machine so you can press **Hook** to transfer the call to the cordless handset.

## Using Remote Codes

### Fax Receive Code

If you answer a fax call on an extension telephone, you can tell your machine to receive it by pressing the Fax Receive Code ∗**51**. Wait for the chirping sounds then replace the handset. (See *Easy Receive* on page 50.)

If you answer a fax call at the external telephone, you can make the machine receive the fax by pressing **Start**.

### Telephone Answer Code

If you receive a voice call and the machine is in F/T mode, it will start to sound the F/T (double-ring) after the initial ring delay. If you pick up the call on an extension telephone you can turn the F/T ring off by pressing **#51** (make sure you press this *between* the rings).

If the machine answers a voice call and pseudo/double-rings for you to take over, you can take the call at the external telephone by pressing **Hook**.

## Changing the Remote Codes

The preset Fax Receive Code is ***51**. The preset Telephone Answer Code is **#51**. If you are always disconnected when accessing your External TAD, try changing the three-digit remote codes, for example **###** and 999.

1. Make sure you are in Fax mode [ ].
2. Press **Menu**, **2**, **1**, **4**.

```
Setup Receive
4.Remote Codes
```

3. Press ▲ or ▼ to choose `On` (or `Off`).
   Press **OK**.
4. If you chose `On` in step ❸, enter the new Fax Receive Code.
   Press **OK**.
5. Enter the new Telephone Answer Code.
   Press **OK**.
6. Press **Stop/Exit**.

# 8 Dialing and storing numbers

## How to dial

You can dial in any of the following ways.

### Manual dialing

Use the dial pad to enter all the digits of the telephone or fax number.

### One touch dialing

Press the One Touch key that stores the number you want to call. (See *Storing One Touch Dial numbers* on page 65.)

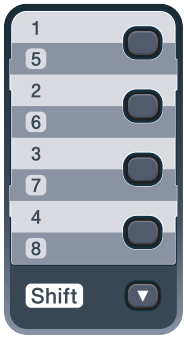


To dial One Touch numbers 5 to 8, hold down **Shift** as you press the One Touch key.

### Speed dialing

Press ▼ (**Address Book**) and then the three digit Speed Dial number. (See *Storing Speed Dial numbers* on page 66.)

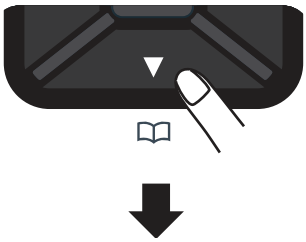

**Three-digit number**

**Note**

If the LCD shows `Register Now?` when you enter a One Touch or a Speed Dial number, it means that a number is not stored there.

## Search

You can search alphabetically for names you have stored in the One Touch and Speed Dial memories. (See *Storing One Touch Dial numbers* on page 65 and *Storing Speed Dial numbers* on page 66.)

1. Press ▼ (**Address Book**) twice.
2. Press the dial pad key for the first few letters of the name. (Use the chart on *Entering text* on page 219 to help you enter letters.)
   Press **OK**.
3. Press ▲ or ▼ to scroll until you find the name you are looking for.
   Press **OK**.
4. Press **Black Start** or **Color Start**.

**Note**

- If you do not enter a letter and press **OK** in step ❷, all registered names will appear. Press ▲ or ▼ to scroll until you find the name you are looking for.
- If the LCD shows `No Contact Found` when you enter the first few letters of the name, it means that a name for the letter is not stored.

## Fax redial

If you are sending a fax manually and the line is busy, press **Redial/Pause**, wait for the other fax machine to answer, and then press **Black Start** or **Color Start** to try again. If you want to make a second call to the last number dialed, you can save time by pressing **Redial/Pause** and **Black Start** or **Color Start**.

**Redial/Pause** only works if you dialed from the control panel.

If you are sending a fax automatically and the line is busy, the machine will automatically redial one time after five minutes.

# Storing numbers

You can set up your machine to do the following types of easy dialing: One Touch, Speed Dial and Groups for Broadcasting faxes. You can also specify the default resolution for each One Touch and Speed Dial number. When you dial a quick dial number, the LCD shows the name, if you stored it, or the number. A scan profile can also be stored along with the fax number.

If you lose electrical power, the quick dial numbers stored in the memory will not be lost.

A scan profile is the resolution and other scan settings that you choose when you store a number. For example, you will be asked to select Standard, Fine, or Photo if you have selected the I-FAX option. Or, you will be asked to select B&W 200 dpi, B&W 200x100 dpi, Gray 100dpi, Gray 200dpi, Gray 300dpi, Color 100 dpi, Color 200 dpi, Color 300dpi or Color 600 dpi if you selected the E-Mail option. (I-FAX, Fax/Tel and E-mail options are available as a download.)

## Storing a pause

Press **Redial/Pause** to insert a 3.5-second pause between numbers. You can press **Redial/Pause** as many times as needed to increase the length of the pause.

## Storing One Touch Dial numbers

Your machine has 4 One Touch keys where you can store 8 fax or telephone numbers for automatic dialing. To access numbers 5 to 8, hold down **Shift** as you press the One Touch key.

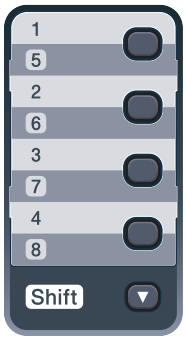


1. Press the One Touch key where you want to store the number.
   If a number is not stored there, the LCD shows `Register Now?`.
   Press **1** to choose `Yes`.
2. Enter the telephone or fax number (up to 20 characters).
   Press **OK**.
3. Choose one of the following:
   - Enter the name using the dial pad (up to 15 characters). Use the chart on *Entering text* on page 219 to help you enter letters.

     Press **OK**.
   - Press **OK** to store the number without a name.
4. If you want to save a fax resolution along with the number, choose one of the following:
   - To store the fax resolution, press ▲ or ▼ to select `Std`, `Fine`, `S.Fine` or `Photo`.

     Press **OK**.
   - Press **OK** if you don't want to change the default resolution.

### If you downloaded I-FAX, Fax/Tel and E-mail options

1. Press the One Touch key where you want to store the number.
   If a number is not stored there, the LCD shows `Register Now?`.
   Press **1** to choose `Yes`.
2. Press ▲ or ▼ to select `Fax/Tel`, `E-Mail` or `IFAX`.
   Press **OK**.
3. Choose one of the following:
   - Enter the telephone or fax number (up to 20 characters) if you selected `Fax/Tel`.

     Press **OK**.
   - Enter the E-mail address (up to 60 characters) if you selected `E-Mail` or `IFAX`. Use the chart on *Entering text* on page 219 to help you enter letters.

     Press **OK**.

**Note**

If you selected `E-Mail` and save the E-mail address, you can only use the E-mail address when you are in Scan mode. If you selected `IFAX` and save the E-mail address, you can only use the E-mail address when you are in Fax mode.

4. Choose one of the following:
   - Enter the name using the dial pad (up to 15 characters).

     Press **OK**.
   - Press **OK** to store the number or E-mail address without a name.

5 If you want to save a fax/scan resolution along with the number, choose one of the following:

- If you selected `Fax/Tel` in step ❷, press ▲ or ▼ to select `Std`, `Fine`, `S.Fine` or `Photo`.

  Press **OK**.

- If you selected E-Mail in step ❷, press ▲ or ▼ to select `Color100dpi`, `Color200dpi`, `Color300dpi`, `Color600dpi`, `Gray100dpi`, `Gray200dpi`, `Gray300dpi`, `B&W200dpi` or `B&W200x100`.

  Press **OK** and then go to step ❻.

- If you selected IFAX in step ❷, press ▲ or ▼ to select `Std`, `Fine` or `Photo`.

  Press **OK**.

- Press **OK** if you don't want to change the default resolution.

6 If you selected Black & White in step ❺, select the file format (TIFF, PDF or Secure PDF) that will be used to send to your PC. If you selected Gray or Color in step ❺, select the file format (PDF, Secure PDF, JPEG, or XPS) that will be used to send to your PC.
Press **OK**.

**Note**

- When you do a broadcast and you have saved a scan profile along with the number or E-mail address, the scan profile of the One-Touch, Speed-Dial or Group number you chose first will be applied to the broadcast.
- You can also store the number by pressing **Menu**, **2**, **3**, **1**.

## Storing Speed Dial numbers

You can store your frequently used numbers as Speed Dial numbers, so that when you dial you will only have to press a few keys (▼ (**Address Book**), the three-digit number and **Black Start** or **Color Start**). The machine can store 200 Speed Dial numbers (001 - 200).

1 Press ▼ (**Address Book**) and enter a three-digit Speed Dial location number (001-200).
If a number is not stored there, the LCD shows `Register Now?`
Press **1** to choose `Yes`.

2 Enter the telephone or fax number (up to 20 characters).
Press **OK**.

3 Choose one of the following:

- Enter the name using the dial pad (up to 15 characters). Use the chart on *Entering text* on page 219 to help you enter letters.

  Press **OK**.

- Press **OK** to store the number without a name.

4 If you want to save a fax resolution along with the number, choose one of the following:

- To store the fax resolution, press ▲ or ▼ to select `Std`, `Fine`, `S.Fine` or `Photo`.

  Press **OK**.

- Press **OK** if you don't want to change the default resolution.

**If you downloaded I-FAX, Fax/Tel and E-mail options**

1. Press ▼ (**Address Book**) and enter a three-digit Speed Dial location number (001-200).
   If a number is not stored there, the LCD shows `Register Now?`
   Press **1** to choose `Yes`.

2. Press ▲ or ▼ to select `Fax/Tel`, `E-Mail` or `IFAX`.
   Press **OK**.

3. Choose one of the following:
   - Enter the telephone or fax number (up to 20 characters) if you selected `Fax/Tel`.

     Press **OK**.
   - Enter the E-mail address (up to 60 characters) if you selected `E-Mail` or `IFAX`. Use the chart on *Entering text* on page 219 to help you enter letters.

     Press **OK**.

**Note**

If you selected `E-Mail` and save the E-mail address, you can only use the E-mail address when you are in Scan mode. If you selected `IFAX` and save the E-mail address, you can only use the E-mail address when you are in Fax mode.

4. Choose one of the following:
   - Enter the name using the dial pad (up to 15 characters).

     Press **OK**.
   - Press **OK** to store the number or E-mail address without a name.

5. If you want to save a fax/scan resolution along with the number, choose one of the following:
   - If you selected `Fax/Tel` in step ❷, press ▲ or ▼ to select `Std`, `Fine`, `S.Fine` or `Photo`.

     Press **OK**.
   - If you selected E-Mail in step ❷, press ▲ or ▼ to select `Color100dpi`, `Color200dpi`, `Color300dpi`, `Color600dpi`, `Gray100dpi`, `Gray200dpi`, `Gray300dpi`, `B&W200dpi` or `B&W200x100`.

     Press **OK** and then go to step ❻.
   - If you selected IFAX in step ❷, press ▲ or ▼ to select `Std`, `Fine` or `Photo`.

     Press **OK**.
   - Press **OK** if you don't want to change the default resolution.

6. If you selected Black & White in step ❺, select the file format (TIFF, PDF or Secure PDF) that will be used to send to your PC. If you selected Gray or Color in step ❺, select the file format (PDF, Secure PDF, JPEG, or XPS) that will be used to send your PC.
   Press **OK**.

**Note**

- When you do a broadcast and you have saved a scan profile along with the number or E-mail address, the scan profile of the One-Touch, Speed-Dial or Group number you chose first will be applied to the broadcast.
- You can also store the number by pressing **Menu**, **2**, **3**, **1**.

## Changing One Touch and Speed Dial numbers

If you try to store a One Touch or Speed Dial number over an existing number, the LCD will show the name or number already stored there. If your machine has a scheduled job or you have set a fax forwarding number, the LCD will ask you if you want to change the number.

1. Do one of the following:
   - To change a stored One Touch number, press **Menu**, **2**, **3**, **1**.

     Press **OK**.

     ```
     One Touch Dial
     Select One Touch
     ```

     Choose the One Touch number you want to change.
   - To change a stored Speed Dial number, press **Menu**, **2**, **3**, **2**.

     Press **OK**.

     ```
     Speed Dial
     Speed Dial? #
     ```

     Choose the Speed Dial number you want to change then press **OK**.
2. Do one of the following:
   - To change the stored number, press **1**.
   - To exit without making a change, press **2**.

   ```
   #005:MIKE
   1.Change  2.Exit
   ```
3. Enter a new number.
   Press **OK**.
4. Press ◀ or ▶ to position the cursor under the character you want to change, and then press **Clear/Back** to delete it. Repeat for each character you want to delete.
5. If you want to save a fax resolution along with the number, one of the following:
   - To store the fax resolution, press ▲ or ▼ to select `Std`, `Fine`, `S.Fine` or `Photo`.

     Press **OK**.
   - Press **OK** if you don't want to change the default resolution.
6. Press **Stop/Exit**.

**If you downloaded I-FAX, Fax/Tel and E-mail options**

1. Do one of the following:
   - To change a stored One Touch number, press **Menu**, **2**, **3**, **1**.

     Press **OK**.

     ```
     One Touch Dial
     Select One Touch
     ```

     Choose the One Touch number you want to change.
   - To change a stored Speed Dial number, press **Menu**, **2**, **3**, **2**.

     Press **OK**.

     ```
     Speed Dial
     Speed Dial? #
     ```

     Choose the Speed Dial number you want to change then press **OK**.
2. Do one of the following:
   - To change the stored number, press **1**.
   - To exit without making a change, press **2**.

   ```
   #005:MIKE
   1.Change  2.Exit
   ```
3. Press ▲ or ▼ to select `Fax/Tel`, `E-Mail` or `IFAX`.
   Press **OK**.
4. Enter a new number or character.
   Press **OK**.

5 Press ◀ or ▶ to position the cursor under the character you want to change, and then press **Clear/Back** to delete it. Repeat for each character you want to delete.

6 Follow the directions beginning in step ❺ in Storing One-Touch dial numbers and Storing Speed-Dial numbers. (See *Storing One Touch Dial numbers* on page 65 and *Storing Speed Dial numbers* on page 66.)

## Setting up Groups for Broadcasting

If you often want to send the same fax message to many fax numbers you can set up a group.

Groups are stored on a One Touch key or a Speed Dial number. Each group uses up a One Touch key or a Speed Dial location. You can then send the fax message to all the numbers stored in a group just by pressing a One Touch key or entering a Speed Dial number, and then pressing **Black Start**.

Before you can add numbers to a group, you need to store them as One Touch or Speed Dial numbers. You can have up to 20 small groups, or you can assign up to 207 numbers to one large group.

1 Press **Menu**, **2**, **3**, **3**.

```
Address Book
3.Setup Groups
```

2 Choose the One Touch key or Speed Dial location where you want to store the group.

- Press a One Touch key.
- Press ▼ (**Address Book**) and then enter the three-digit Speed Dial location.

  Press **OK**.

3 Use the dial pad to enter a group number (01 to 20).
Press **OK**.

4 To add One Touch or Speed Dial numbers follow the instructions below:

- For One Touch numbers, press the One Touch keys one after the other.
- For Speed Dial numbers, press ▼ (**Address Book**) and then enter the three-digit Speed Dial location.

The LCD will display your chosen One Touch numbers with a ∗ and Speed Dial numbers with a # (for example ∗006, #009).

5 Press **OK** when you have finished adding numbers.

6 Do one of the following:

- Enter the name using the dial pad (up to 15 characters). Use the chart on *Entering text* on page 219 to help you enter letters.

  Press **OK**.
- Press **OK** to store the group without a name.

7 If you want to save a fax resolution along with the number, choose one of the options below:

- To store the fax resolution, press ▲ or ▼ to select `Std`, `Fine`, `S.Fine` or `Photo`.

  Press **OK**.
- Press **OK** if you do not want to change the default resolution.

8 Do one of the following:

- To store another group for broadcasting, go to step ❷.
- To finish storing groups for broadcasting, press **Stop/Exit**.

### If you downloaded I-FAX, Fax/Tel and E-mail options

1. Press **Menu**, **2**, **3**, **3**.

```
Address Book
3.Setup Groups
```

2. Choose an empty location where you want to store the group in one of the following ways:
   - Press a One Touch key.
   - Press ▼ (**Address Book**) and then enter the three-digit Speed Dial location.

     Press **OK**.
3. Use the dial pad to enter a group number (01 to 20).
   Press **OK**.
4. Press ▲ or ▼ to select `Fax/IFAX` or `E-Mail`.
   Press **OK**.
5. To add One Touch or Speed Dial numbers follow the instructions below:
   - For One Touch numbers, press the One Touch keys one after the other.
   - For Speed Dial numbers, press ▼ (**Address Book**) and then enter the three-digit Speed Dial location.

   The LCD will display your chosen One Touch numbers with a ∗ and Speed Dial numbers with a # (for example ∗006, #009).
6. Press **OK** when you have finished adding numbers.
7. Do one of the following:
   - Enter the name using the dial pad (up to 15 characters). Use the chart on *Entering text* on page 219 to help you enter letters.

     Press **OK**.
   - Press **OK** to store the group without a name.
8. You can save a fax/scan resolution along with the number. Do one of the following:
   - If you selected Fax/IFAX in step ❹, press ▲ or ▼ to select `Std`, `Fine`, `S.Fine` or `Photo`.

     Press **OK**.
   - If you selected E-mail in step ❹, press ▲ or ▼ to select `Color100dpi`, `Color200dpi`, `Color300dpi`, `Color600dpi`, `Gray100dpi`, `Gray200dpi`, `Gray300dpi`, `B&W200dpi` or `B&W200x100`.

     Press **OK**.
   - Press **OK** if you don't want to change the default resolution.

**Note**

If you have selected Fax/IFAX in step ❹ and added One-Touch or Speed-Dial numbers that are stored as 'I-Fax', you cannot select `S.Fine`.

9. If you selected Black & White in step ❽, select the file format (TIFF, PDF or Secure PDF) that will be used to send to your PC. If you selected Gray or Color in step ❽, select the file format (PDF, Secure PDF, JPEG or XPS) that will be used to send your PC.
   Press **OK**.

**Note**

Fax Broadcasting is for black & white only.

## Dialing access codes and credit card numbers

You can combine more than one Quick Dial number when you dial. This feature may be useful if you need to dial an access code for a cheaper rate from another long distance carrier.

For example, you might have stored ‘555’ on Speed Dial #003 and ‘7000’ on Speed Dial #002. You can use them both to dial ‘555-7000’ if you press the following keys:

Press ▼ (**Address Book**), **003**.

Press ▼ (**Address Book**), **002** and **Black Start** or **Color Start**.

Numbers can be added manually by entering them on the dial pad:

Press ▼ (**Address Book**), **003**, **7001** (on the dial pad), and **Black Start** or **Color Start**.

This would dial ‘555–7001’. You can also add a pause by pressing **Redial/Pause** key.

## Pause

Press **Redial/Pause** to insert a 3.5-second pause between numbers. You can press **Redial/Pause** as many times as needed to increase the length of the pause.

## Tone or Pulse (Canada only)

If you have a Pulse dialing service, but need to send Tone signals (for example, for telephone banking), follow the instructions below. If you have Touch Tone service, you will not need this feature to send tone signals.

1. Press **Hook**.
2. Press **#** on the machine’s control panel. Any digits dialed after this will send tone signals.
   When you hang up, the machine will return to the Pulse dialing service.

# 9 Remote Fax Options (black & white only)

Remote Fax Options ARE NOT available for color fax.

Remote Fax Options let you receive faxes while you are away from the machine.

You can use *only one* Remote Fax Option at a time.

## Fax Forwarding

The Fax Forwarding feature lets you automatically forward your received faxes to another machine.

1. Press **Menu**, **2**, **5**, **1**.

```
Remote Fax Opt
1.Fwd/Page/Store
```

2. Press ▲ or ▼ to choose `Fax Forward`. Press **OK**.
   The LCD will ask you to enter the fax number you want your faxes to be forwarded to.

3. Enter the forwarding number using the dial pad (up to 20 digits), using a One Touch key or press ▼ (**Address Book**) and the three-digit location.
   Press **OK**.

**Note**

- If you store a group on a One Touch key or a Speed Dial location, the faxes will be forwarded to several fax numbers.
- You can also enter an E-mail address if your machine has been configured for the Internet Fax feature. (For details about Internet Fax, see the *Network User's Guide* on the CD-ROM.

4. Press ▲ or ▼ to choose `On` or `Off`. Press **OK**.

```
Backup Print
On
```

5. Press **Stop/Exit**.

**IMPORTANT**

If you choose Backup Print On, the machine will also print the fax at your machine so you will have a copy. This is a safety feature in case there is a power failure before the fax is forwarded or a problem at the receiving machine. The machine can store faxes for approximately 60 hours if there is a power failure.

# Paging

When Paging is chosen, the machine dials the cell phone number you programmed. This activates your cell phone or pager so you will know that you have a fax message in the machine's memory.

1. Press **Menu**, **2**, **5**, **1**.

   ```
   Remote Fax Opt
   1.Fwd/Page/Store
   ```

2. Press ▲ or ▼ to choose `Paging`. Press **OK**.

3. Enter your cell phone number followed by **# #** (up to 20 digits).Press **OK**. Do not include the area code if it is the same as that of your machine. For example, press **1 8 0 0 5 5 5 1 2 3 4 # #**.

4. Do one of the following:
   - If you pager needs a PIN, enter the PIN, press #, press **Redial/Pause**, enter your fax number followed by ##. Press **OK**. (For example, press: **1 2 3 4 5 # Redial/Pause 1 8 0 0 5 5 5 6 7 8 9 # #**)
   - If you do not need a PIN, press **OK**.
   - If you are programming a cell phone number, press **OK**.

5. Press **Stop/Exit**.

**Note**

- If you have set Paging, a backup copy will automatically be printed at the machine.
- You cannot change a Paging or PIN number remotely.

# Fax Storage

The Fax Storage feature lets you store your received faxes in the machine's memory. You can retrieve stored fax messages from a fax machine at another location using the remote retrieval commands. (See *Retrieving fax messages* on page 77.) Your machine will automatically print a copy of the stored fax.

1. Press **Menu**, **2**, **5**, **1**.

   ```
   Remote Fax Opt
   1.Fwd/Page/Store
   ```

2. Press ▲ or ▼ to choose `Fax Storage`. Press **OK**.

3. Press **Stop/Exit**.

**Note**

If `Fax Storage` is turned on your machine cannot receive a color fax unless the sending machine converts it to black & white.

# PC Fax Receive

If you turn on the PC Fax Receive feature your machine will store received faxes in memory and send them to your PC automatically. You can then use your PC to view and store these faxes.

Even if you have turned off your PC (at night or on the weekend, for example), your machine will receive and store your faxes in its memory. The LCD will show the number of stored faxes received, for example:
`PC Fax Msg:001`

When you start your PC and the PC Fax Receiving software runs, your machine transfers your faxes to your PC automatically.

For PC Fax Receive to work you must have the PC-FAX Receive software running on your PC. (For details, see *PC-FAX receiving* in the *Software User's Guide* on the CD-ROM.)

If you choose Backup Print On, the machine will also print the fax.

1. Press **Menu**, **2**, **5**, **1**.

```
Remote Fax Opt
1.Fwd/Page/Store
```

2. Press ▲ or ▼ to choose `PC Fax Receive`.
   Press **OK**.

3. Press ▲ or ▼ to choose `<USB>` or your computer name if the machine is connected to a network.

```
Select ▲▼ or OK
<USB>
```

   Press **OK**.

4. Press ▲ or ▼ to choose `On` or `Off`.

```
Backup Print
Off
```

   Press **OK**.

5. Press **Stop/Exit**.

**IMPORTANT**

If you choose Backup Print On, the machine will also print the fax at your machine so you will have a copy. This is a safety feature in case there is a power failure before the fax is forwarded or a problem at the receiving machine. The machine can store faxes for approximately 60 hours if there is a power failure.

**Note**

- Before you can set up PC Fax Receive you must install the MFL-Pro Suite software on your PC. Make sure your PC is connected and turned on. (For details see *PC-FAX receiving* in the *Software User's Guide* on the CD-ROM.)
- If your machine has a problem and is unable to print faxes in memory, you can use this setting to transfer your faxes to a PC. (For details, see *Error and maintenance messages* on page 144.)
- PC Fax Receive is not supported in Mac OS. (See *PC-FAX receiving* in the *Software User's Guide* on the CD-ROM.)

# Changing Remote Fax Options

If received faxes are left in your machine's memory when you change to another Remote Fax Option, the LCD will ask you the following message:

```
Erase All Fax?
1.Yes 2.No
```

or

```
Print All Fax?
1.Yes 2.No
```

- If you press **1**, faxes in the memory will be erased or printed before the setting changes. If a backup copy has already been printed it will not be printed again.
- If you press **2**, faxes in the memory will not be erased or printed and the setting will be unchanged.

If received faxes are left in the machine's memory when you change to `PC Fax Receive` from another remote fax option (`Fax Forward`, `Paging` or `Fax Storage`), the LCD will ask you the following message:

```
Send Fax to PC?
1.Yes 2.No
```

- If you press **1**, faxes in the memory will be sent to your PC before the setting changes. Faxes in the memory will be sent to your PC when the PC Fax Receive icon is active on your PC. (See the *Software User's Guide* on the CD-ROM.)

The LCD will ask you the following message:

```
Backup Print
On
```

```
Backup Print
Off
```

Press ▲ or ▼ to choose `On` or `Off`.

Press **OK**.

Press **Stop/Exit**.

- If you press **2**, faxes in the memory will not be erased or transferred to your PC and the setting will be unchanged.

**IMPORTANT**

If you choose Backup Print On, the machine will also print the fax at your machine so you will have a copy. This is a safety feature in case there is a power failure before the fax is forwarded or a problem at the receiving machine. The machine can store faxes for approximately 60 hours if there is a power failure.

## Turning off Remote Fax Options

1. Press **Menu**, **2**, **5**, **1**.

```
Remote Fax Opt
1.Fwd/Page/Store
```

2. Press ▲ or ▼ to choose `Off`.
   Press **OK**.

**Note**

The LCD will give you options if there are received faxes still in your machine's memory. (See *Changing Remote Fax Options* on page 75.)

3. Press **Stop/Exit**.

# Remote retrieval

The remote retrieval feature lets you retrieve your stored fax messages when you are not at the machine. You can call your machine from any touch tone telephone or fax machine, then use the Remote Access Code to retrieve your messages.

## Setting a Remote Access Code

The Remote Access Code feature lets you access the remote retrieval features when you are away from your machine. Before you use the remote access and retrieval features, you have to set up your own code. The default code is an inactive code: – – –✳.

1. Press **Menu**, **2**, **5**, **2**.

```
Remote Fax Opt
2.Remote Access
```

2. Enter a three-digit code using the numbers **0** – **9**, ✳ or **#**.
   Press **OK**.

3. Press **Stop/Exit**.

**Note**

Do not use the same code used for your Fax Receive Code (✳**51**) or Telephone Answer Code (**#51**). (See *Changing the Remote Codes* on page 62.)

You can change your code at any time. If you want to make your code inactive, press **Clear/Back** and then **OK** in ❷ to restore the inactive setting – – –✳.

## Using your Remote Access Code

1. Dial your fax number from a telephone or another fax machine using touch tone.

2. When your machine answers, immediately enter your Remote Access Code (3 digits followed by ✳).

3. The machine signals if it has received messages:

   - *No beeps*

     No messages received.

   - *1 long beep*

     Fax message received.

4. The machine gives two short beeps to tell you to enter a command (See *Remote fax commands* on page 78). The machine will hang up if you wait longer than 30 seconds before entering a command. If you enter an invalid command the machine will beep three times.

5. Press **9 0** to reset the machine when you have finished.

6. Hang up.

**Note**

If your machine is set to `Manual` mode, you can still access the remote retrieval features. Dial the fax number as normal and let the machine ring. After 100 seconds you will hear a long beep to tell you to enter the remote access code. You will then have 30 seconds to enter the code.

## Retrieving fax messages

1. Dial your fax number from a telephone or another fax machine using touch tone.
2. When your machine answers, immediately enter your Remote Access Code (3 digits followed by ∗). If you hear one long beep, you have messages.
3. When you hear two short beeps, use the dial pad to press **9 6 2**.
4. Wait for a long beep, and then use the dial pad to enter the number of the remote fax machine where you want your fax messages sent, followed by **##** (up to 20 digits).
5. Hang up after you hear your machine beep. Your machine will call the other machine, which will then print your fax messages.

**Note**

You can insert a pause in a fax number by using the # key.

## Changing the Fax Forwarding number

You can change the default setting of your fax forwarding number from another telephone or fax machine using touch tone.

1. Dial your fax number from a telephone or another fax machine using touch tone.
2. When your machine answers, enter your Remote Access Code (3 digits followed by ∗). If you hear one long beep, you have messages.
3. When you hear two short beeps, use the dial pad to press **9 5 4**.
4. Wait for a long beep, and then use the dial pad to enter the new number of the remote fax machine where you want your fax messages forwarded followed by **##** (up to 20 digits).
5. Press **9 0** to reset the machine when you have finished.
6. Hang up after you hear your machine beep.

**Note**

You can insert a pause in a fax number by using the # key.

# Remote fax commands

Follow the commands below to access features when you are away from the machine. When you call the machine and enter your Remote Access Code (3 digits followed by ∗), the system will give two short beeps and you must enter a remote command.

| Remote commands | | Operation details |
|---|---|---|
| 95 | **Change the fax forwarding, paging or fax storage settings** | |
| | 1 OFF | You can choose `Off` after you have retrieved or erased all your messages. |
| | 2 Fax Forwarding | One long beep means the change is accepted. If you hear three short beeps, you cannot make the change because something has not been set up (for example, a fax forwarding or paging number has not been registered). You can register your fax forwarding number by entering 4. (See *Changing the Fax Forwarding number* on page 77.) Once you have registered the number, fax forwarding will work. |
| | 3 Paging | |
| | 4 Fax Forwarding number | |
| | 6 Fax Storage | |
| 96 | **Retrieve a fax** | |
| | 2 Retrieve all faxes | Enter the number of a remote fax machine to receive stored fax messages. (See *Retrieving fax messages* on page 77.) |
| | 3 Erase faxes from the memory | If you hear one long beep, fax messages have been erased from the memory. |
| 97 | **Check the receiving status** | |
| | 1 Fax | You can check whether your machine has received any faxes. If yes, you will hear one long beep. If no, you will hear three short beeps. |
| 98 | **Change the Receive Mode** | |
| | 1 External TAD | If you hear one long beep, your change has been accepted. |
| | 2 Fax/Tel | |
| | 3 Fax Only | |
| 90 | **Exit** | Press **9 0** to exit remote retrieval. Wait for the long beep, then replace the handset. |

# 10 Polling

Polling lets you set up your machine so other people can receive faxes from you, but they pay for the call. It also lets you call somebody else's fax machine and receive a fax from it, so you pay for the call. The polling feature needs to be set up on both machines for this to work. Not all fax machines support polling.

## Polling receive

Polling receive lets you call another fax machine to receive a fax.

1. Make sure you are in Fax mode .
2. Press **Menu**, **2**, **1**, **7**.

   ```
   Setup Receive
   7.Polling RX
   ```

3. Enter the fax number you are polling.
   Press **Start**.
   The LCD will show `Dialing`.

## Sequential polling

Sequential polling lets you request documents from several fax machines in one operation. Afterwards, a Sequential Polling Report will be printed.

1. Make sure you are in Fax mode .
2. Press **Menu**, **2**, **1**, **7**.

   ```
   Setup Receive
   7.Polling RX
   ```

3. Specify the fax machines you want to poll by using One Touch, Speed Dial, Search, a Group or the dial pad. You must press **OK** between each location. Press **OK**.
4. Press **Start**.
   The machine polls each number or Group number in turn for a document.

Press **Stop/Exit** while the machine is dialing to cancel the polling process.

To cancel all sequential polling receive jobs, press **Menu**, **2**, **7**. (See *Checking and canceling waiting jobs* on page 45.)

# Polled transmit (black & white only)

Polled transmit lets you set up your machine to wait with a document so another fax machine can call and retrieve it.

## Setup for polled transmit

1. Make sure you are in Fax mode .
2. Load your document.
3. Press **Menu**, **2**, **2**, **6**.

```
Setup Send
6.Polled TX
```

4. Press ▲ or ▼ to choose `On` (or `Off`). Press **OK**.
5. Press **2** to choose `2.No` if you do not want to enter more settings when the LCD asks you the following message:

```
Other Settings
1.Yes 2.No
```

6. Press **Start**.
7. If you are using the scanner glass, the LCD will prompt you to choose one of the options below:

```
Next Page?
1.Yes 2.No(Send)
```

   - Press **1** to send another page. Go to step ❽.
   - Press **2** or **Start** to send the document.

8. Place the next page on the scanner glass, press **OK**. Repeat steps ❼ and ❽ for each additional page.

   The document will be stored in memory and wait to be polled.

**Note**

The document will be stored and can be retrieved from any other fax machine until you delete the fax from memory.

To delete the fax from memory, press **Menu**, **2**, **7**. (See *Checking and canceling waiting jobs* on page 45.)

# 11 Printing reports

## Fax reports

You need to set up the Transmission Verification Report and Journal Period using the **Menu** keys.

### Transmission verification report

You can use the Transmission Verification Report as proof that you sent a fax. This report lists the receiving party's name or fax number, the time and date of transmission, duration of transmission, number of pages sent, and whether or not the transmission was successful.

There are several settings available for the Transmission Verification Report:

- `On`: Prints a report after every fax you send.
- `On+Image`: Prints a report after every fax you send. A portion of the fax's first page appears on the report.
- `Off`: Prints a report if your fax is unsuccessful due to a transmission error. The report will also print if you send a color fax that the receiving machine prints in black and white. Off is the default setting.
- `Off+Image`: Prints a report if your fax is unsuccessful due to a transmission error. The report will also print if you send a color fax that the receiving machine prints in black and white. A portion of the fax's first page appears on the report.

1. Press **Menu**, **2**, **4**, **1**.

```
Report Setting
1.Transmission
```

2. Press ▲ or ▼ to choose `On`, `On+Image`, `Off` or `Off+Image`.
   Press **OK**.
3. Press **Stop/Exit**.

**Note**

- If you choose `On+Image` or `Off+Image`, the image will only appear on the Transmission Verification Report if Real Time Transmission is set to `Off`. (See *Real Time Transmission* on page 43.)
- If your transmission is successful, `OK` will appear next to `RESULT` on the Transmission Verification Report. If transmission is not successful, `NG` will appear next to `RESULT`.

## Fax Journal

You can set the machine to print a fax journal (activity report) at specific intervals (every 50 faxes, 6, 12 or 24 hours, 2 or 7 days). The default setting is `Every 50 Faxes`, this means that your machine will print the journal when the machine has stored 50 jobs.

If you set the interval to `Off`, you can still print the report by following the steps on the next page.

1. Press **Menu**, **2**, **4**, **2**.

```
Report Setting
2.Journal Period
```

2. Press ▲ or ▼ to choose an interval. Press **OK**.
   If you choose 7 days, you will be asked to choose a day when you want the 7 day countdown to begin.
   If you choose `Every 50 Faxes`, the LCD shows `Accepted`. Then go to step ❹.

3. Enter the time to begin printing, in 24 hour format.
   For example: enter 19:45 for 7:45 PM.
   Press **OK**.

4. Press **Stop/Exit**.

If you choose 6, 12, 24 hours, 2 or 7 days, the machine will print the report at the selected time and then erase all jobs from its memory. If the machine's memory becomes full with 200 jobs before the time you chose has passed, the machine will print the journal early and then erase all jobs from memory.

If you want an extra report before it is due to print, you can print it manually without erasing the jobs from memory.

# Reports

The following reports are available:

1 `Transmission`

Displays the Transmission Verification Report for your last outgoing 200 faxes and prints the last report.

2 `Help List`

Prints a list of commonly used functions to help you program your machine.

3 `Tel Index List`

Prints a list of names and numbers stored in the One Touch and Speed Dial memory in numerical or alphabetical order.

4 `Fax Journal`

Prints a list of information about your last 200 incoming and outgoing faxes. (TX: transmit.) (RX: receive.)

5 `User Settings`

Print a list of your current settings.

6 `Network Config`

Lists your network settings.

## How to print a report

**MFC-9325CW:**

1. Press **Menu**, **6**.

```
Select ▲▼ or OK
6.Print Reports
```

2. Do one of the following:
   - Press ▲ or ▼ to choose the report you want.

     Press **OK**.
   - Enter the number of the report you want to print. For example, press **2** to print the Help List.
3. Press **Black Start** or **Color Start**.
4. Press **Stop/Exit**.

**MFC-9125CN:**

1. Press **Reports**.
2. Do one of the following:
   - Press ▲ or ▼ to choose the report you want.

     Press **OK**.
   - Enter the number of the report you want to print. For example, press **2** to print the Help List.

     If you choose `1.Transmission`, press ▲ or ▼ to choose `1.View on LCD` or `2.Print Reports`. Then press **OK**.

     If you choose `3.Tel Index List`, press ▲ or ▼ to choose `1.Numeric` or `2.Alphabetic`. Then press **OK**.
3. Press **Stop/Exit**.

Section III

# Copy

**Making copies** 86

# 12 Making copies

## How to copy

### Entering copy mode

Press (**COPY**) to enter Copy mode.

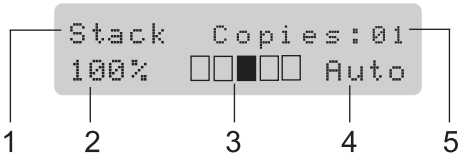


1 **Stack/Sort**
2 **Copy ratio and Copy layout**
3 **Contrast**
4 **Quality**
5 **Number of copies**

### Making a single copy

1. Make sure you are in Copy mode .
2. Load your document in the ADF or on the scanner glass.
3. Press **Black Start** or **Color Start**.

### Making multiple copies

1. Make sure you are in Copy mode .
2. Load your document in the ADF.
3. Use the dial pad to enter the number of copies (up to 99).
4. Press **Black Start** or **Color Start**.

**Note**

- To sort your copies, see *Sorting copies using the ADF* on page 89.
- If the LCD shows "`Please Wait`" and the machine stops copying while you are making multiple copies, please wait for 30 to 40 seconds until the machine finishes the color registrations and cleaning process of the belt unit.

### Stop copying

To stop copying, press **Stop/Exit**.

# Copy options (temporary settings)

When you want to quickly change the copy settings temporarily for the next copy, use the temporary **Copy** keys. You can use different combinations.

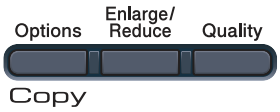


The machine returns to its default settings one minute after copying, unless you have set the Mode Timer to 30 seconds or less. (See *Mode Timer* on page 25.)

## Enlarging or reducing the image copied

You can choose the following enlargement or reduction ratios:

| Press | |
|---|---|
| | **100%*** |
| | 97% LTR→A4 |
| | 94% A4→LTR |
| | 91% Full Page |
| | 85% LTR→EXE |
| | 83% LGL→A4 |
| | 78% LGL→LTR |
| | 70% A4→A5 |
| | 50% |
| | Custom(25-400%) |
| | 200% |
| | 141% A5→A4 |
| | 104% EXE→LTR |

* The factory setting is shown in Bold with an asterisk.

`Custom(25-400%)` allows you to enter a ratio from `25%` to `400%`.

To enlarge or reduce the next copy follow the instructions below:

1. Make sure you are in Copy mode .
2. Load your document.
3. Use the dial pad to enter the number of copies (up to 99).
4. Press **Enlarge/Reduce**.
5. Do one of the following:
   - Press ▲ or ▼ to choose the enlargement or reduction ratio you want.

     Press **OK**.
   - Press ▲ or ▼ to choose `Custom(25-400%)`.

     Press **OK**.

     Use the dial pad to enter an enlargement or reduction ratio from `25%` to `400%`. (For example, press **5 3** to enter `53%`.)

     Press **OK**.
6. Press **Black Start** or **Color Start**.

**Note**

Page Layout Options 2 in 1(P), 2 in 1(L), 4 in 1(P) or 4 in 1(L) are *not* available with Enlarge/Reduce.

## Using the Options key

Use the **Options** key to quickly set the following copy settings temporarily for the next copy.

| Press | Menu selections | Options | Page |
|---|---|---|---|
| 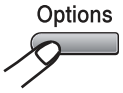 | Press ▲ or ▼, then press **OK** 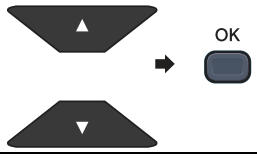 | Press ▲ or ▼, then press **OK** 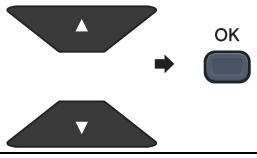 | |
| | Stack/Sort<br>(appears when the document is in the ADF) | **Stack***<br>Sort | 89 |
| | Brightness | ▼-■□□□□+▲<br>▼-□■□□□+▲<br>**▼-□□■□□+▲***<br>▼-□□□■□+▲<br>▼-□□□□■+▲ | 90 |
| | Contrast | ▼-■□□□□+▲<br>▼-□■□□□+▲<br>**▼-□□■□□+▲***<br>▼-□□□■□+▲<br>▼-□□□□■+▲ | 89 |
| | Page Layout | **Off(1 in 1)***<br>2 in 1 (P)<br>2 in 1 (L)<br>4 in 1 (P)<br>4 in 1 (L) | 91 |
| The factory settings are shown in Bold with an asterisk. | | | |

## Improving copy quality

You can choose from a range of quality settings. The default setting is `Auto`.

- `Auto`

  Auto is the recommended mode for ordinary printouts. Suitable for documents that contain both text and photographs.

- `Photo`

  Suitable for copying photographs.

- `Text`

  Suitable for documents containing only text.

To *temporarily* change the quality setting, follow the steps below:

1. Make sure you are in Copy mode [ ].
2. Load your document.
3. Use the dial pad to enter the number of copies (up to 99).
4. Press **Quality**.
5. Press ▲ or ▼ to choose `Auto`, `Photo` or `Text`.
   Press **OK**.
6. Press **Black Start** or **Color Start**.

To change the *default* setting, follow the steps below:

1. Press **Menu**, **3**, **1**.

   ```
   Copy
   1.Quality
   ```

2. Press ▲ or ▼ to choose the copy quality.
   Press **OK**.
3. Press **Stop/Exit**.

## Sorting copies using the ADF

You can sort multiple copies. Pages will be stacked in the order 1 2 3, 1 2 3, 1 2 3, and so on.

1. Make sure you are in Copy mode [ ].
2. Load your document in the ADF.
3. Use the dial pad to enter the number of copies (up to 99).
4. Press **Options**. Press ▲ or ▼ to choose `Stack/Sort`.
   Press **OK**.
5. Press ▲ or ▼ to choose `Stack` or `Sort`.
   Press **OK**.
6. Press **Black Start** or **Color Start**.

## Adjusting Contrast, Color and Brightness

### Contrast

Adjust the contrast to help an image look sharper and more vivid.

To *temporarily* change the contrast setting, follow the steps below:

1. Make sure you are in Copy mode [ ].
2. Load your document.
3. Use the dial pad to enter the number of copies (up to 99).
4. Press **Options**.
   Press ▲ or ▼ to choose `Contrast`.
   Press **OK**.
5. Press ▲ or ▼ to increase or decrease the contrast.
   Press **OK**.
6. Press **Black Start** or **Color Start**.

To change the *default* setting follow the steps below:

1. Press **Menu**, **3**, **3**.

```
Copy
3.Contrast
```

2. Press ▲ or ▼ to increase or decrease the contrast.
   Press **OK**.

3. Press **Stop/Exit**.

## Brightness

Adjust the copy brightness to make copies darker or lighter.

To *temporarily* change the copy brightness setting, follow the steps below:

1. Make sure you are in Copy mode [ ].

2. Load your document.

3. Use the dial pad to enter the number of copies (up to 99).

4. Press **Options**.
   Press ▲ or ▼ to choose `Brightness`.
   Press **OK**.

5. Press ▲ to make a lighter copy or press ▼ to make a darker copy.
   Press **OK**.

6. Press **Black Start** or **Color Start**.

To change the *default* setting follow the steps below:

1. Press **Menu**, **3**, **2**.

```
Copy
2.Brightness
```

2. Press ▲ to make a lighter copy or press ▼ to make a darker copy.
   Press **OK**.

3. Press **Stop/Exit**.

## Color saturation

You can change the default setting for color saturation.

To change the *default* setting follow the steps below:

1. Press **Menu**, **3**, **4**.

```
Copy
4.Color Adjust
```

2. Press ▲ or ▼ to choose `1.Red`, `2.Green`, or `3.Blue`.
   Press **OK**.

3. Press ▲ or ▼ to increase or decrease the color saturation.
   Press **OK**.

4. Return to step ❷ to choose the next color. Or press **Stop/Exit**.

## Making N in 1 copies (page layout)

You can reduce the amount of paper used when copying by using the N in 1 copy feature. This allows you to copy two or four pages onto one page, which lets you save paper.

**IMPORTANT**

- Please make sure the paper size is set to `Letter`, `A4`, `Legal` or `Folio`.
- (`P`) means Portrait and (`L`) means Landscape.
- You cannot use the Enlarge/Reduce setting with the N in 1 feature.

1. Make sure you are in Copy mode [ ].
2. Load your document.
3. Use the dial pad to enter the number of copies (up to 99).
4. Press **Options**. Press ▲ or ▼ to choose `Page Layout`. Press **OK**.
5. Press ▲ or ▼ to choose `2 in 1 (P)`, `2 in 1 (L)`, `4 in 1 (P)`, `4 in 1 (L)` or `Off(1 in 1)`. Press **OK**.
6. Press **Black Start** or **Color Start** to scan the page.
   If you placed the document in the ADF, the machine scans the pages and starts printing.
   **If you are using the scanner glass, go to step ❼.**
7. After the machine scans the page, press **1** to scan the next page.

```
Next Page?
1.Yes 2.No
```

8. Place the next page on the scanner glass.
   Press **OK**.
   Repeat steps ❼ and ❽ for each page of the layout.
9. After all the pages have been scanned, press **2** in step ❼ to finish.

### *If you are copying from the ADF:*

Insert your document face up in the direction shown below:

■ **2 in 1 (P)**

■ **2 in 1 (L)**

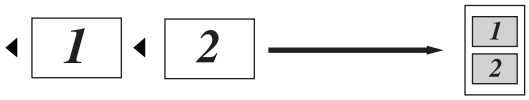


■ **4 in 1 (P)**

■ **4 in 1 (L)**

***If you are copying from the scanner glass:***

Insert your document face down in the direction shown below:

■ **2 in 1 (P)**

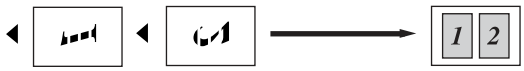


■ **2 in 1 (L)**

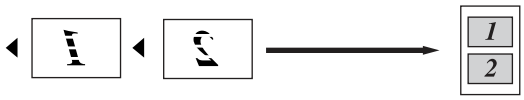


■ **4 in 1 (P)**

■ **4 in 1 (L)**

# Out of memory message

If the memory becomes full while you are making copies, the LCD message will guide you through the next step.

If you get an `Out of Memory` message while scanning a subsequent page, you will have the option to press **Black Start** or **Color Start** to copy the pages scanned so far, or to press **Stop/Exit** to cancel the operation.

To gain extra memory, you can do the following:

- Print the faxes that are in the memory. (See *Printing a fax from the memory* on page 52.)
- You can turn off Fax Storage. (See *Turning off Remote Fax Options* on page 75.)
- Add optional memory. (See *Memory board* on page 126.)

**Note**

When you get an `Out of Memory` message, you may be able to make copies if you first print the incoming faxes in the memory to restore the memory to 100%.

Section IV

# Direct printing


**Printing photos from a digital camera (MFC-9325CW only)** 94

**Printing data from a USB Flash memory drive (MFC-9325CW only)** 99

# 13 Printing photos from a digital camera (MFC-9325CW only)

Your Brother machine supports the PictBridge standard, allowing you to connect to and print photos directly from any PictBridge compatible digital camera.

Even if your camera is not in PictBridge mode or does not support PictBridge, you can connect your camera as a normal storage device. This enables you to print photos from your camera. Follow the steps for "*Printing data from a USB Flash memory drive (MFC-9325CW only)* on page 99".

## Before using PictBridge

### PictBridge requirements

To avoid errors, remember the following points:

- The machine and the digital camera must be connected using a suitable USB cable.
- The image file must be taken with the digital camera you want to connect to the machine.

## Using PictBridge

### Setting your digital camera

Make sure your camera is in PictBridge mode. The following PictBridge settings may be available from the LCD of your PictBridge compatible camera. Depending on your camera some of these settings may not be available.

- Copies
- Qualities
- Paper size
- Date print
- File name print
- Layout (1 in 1 printing/Index printing only)

**Note**

The names and availability of each setting depends on the specification of your camera.

You can also set the following PictBridge settings by using the control panel.

| Menu selections | Options |
|---|---|
| Paper Size | Letter, A4, B5, A5, B6, A6 |
| Orientation | Portrait, Landscape [1] |
| Date & Time | Off, On |
| File Name | Off, On |
| Print Quality | Normal, Fine |

[1] If you choose the paper size Letter, A4 or B5, Portrait will be chosen. If you choose A5, B6 or A6, Landscape will be chosen.

1. Press **Menu**, **5**, **3**.

```
USB Direct I/F
3.PictBridge
```

2. To set the PictBridge settings, press ▲ or ▼ to choose `1.Paper Size`, `2.Orientation`, `3.Date & Time`, `4.File Name`, or `5.Print Quality`. Press **OK**.

3. Press ▲ or ▼ to choose an option for each menu setting.
   Press **OK**.
   Repeat ❷ to ❸ for each PictBridge setting.

4. Press **Stop/Exit**.

**Note**

- Camera settings are prioritized as long as your camera is not set to use your machine's settings (default settings). If your camera is set to use your machine's settings, the machine will print your photo using the settings below.

| Machine settings | Default settings |
|---|---|
| Paper Size | Letter |
| Orientation | Portrait |
| Date & Time | Off |
| File Name | Off |
| Print Quality | Normal |

- Please refer to the documentation supplied with your camera for more detailed information on changing PictBridge settings.

# Printing images

1. Make sure that your camera is turned off. Connect your camera to the USB direct interface (1) on the front of the machine using a suitable USB cable.

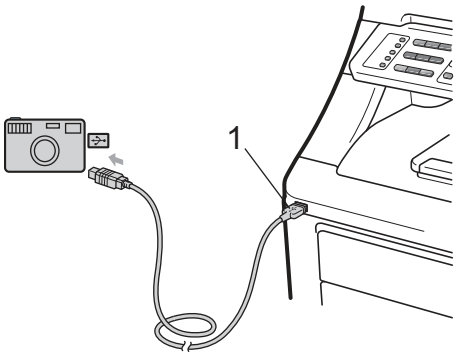


2. Turn on the camera. Make sure your camera is in PictBridge mode.
   When the machine has recognized the camera, the LCD shows the following messages, depending on which mode the machine is in:

```
04/20 15:30 Fax
Camera Connected
```

```
Scan:Select ▲▼
Camera Connected
```

```
Stack  Copies:02
Camera Connected
```

3. Set your camera to print an image. Set the number of copies if you are asked.

   When the machine starts printing an image, the LCD will show the following message:

```
PictBridge
Printing. Kee...
```

**Note**

Please refer to the documentation supplied with your camera for detailed operations how to print using PictBridge.

**IMPORTANT**

- To prevent damage to your machine, do not connect any device other than a digital camera or USB flash memory drive to the USB direct interface.
- DO NOT remove the digital camera from the USB direct interface until the machine has finished printing.

## DPOF printing

DPOF stands for Digital Print Order Format.

Major digital camera manufacturers (Canon Inc., Eastman Kodak Company, FUJIFILM Corporation, Panasonic Corporation and Sony Corporation) created this standard to make it easier to print images from a digital camera.

If your digital camera supports DPOF printing, you will be able to choose on the digital camera display the images and number of copies you want to print.

The following DPOF settings are available.

- 1 in 1 printing
- Copies

# Printing images with Secure Function Lock 2.0 enabled (MFC-9325CW only)

For more information about Secure Function Lock 2.0, see Chapter 11 of the Network User's Guide on the CD-ROM we have supplied.

1. Make sure that your camera is turned off. Connect your camera to the USB direct interface (1) on the front of the printer using a suitable USB cable.

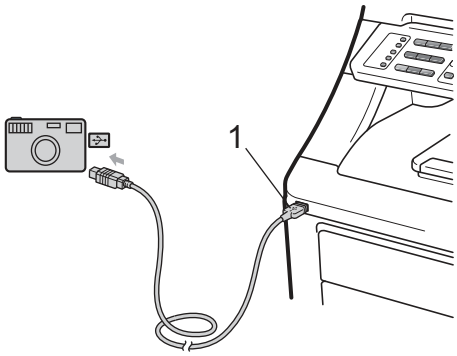


2. Turn on the camera. Make sure your camera is in PictBridge mode.
When the machine has recognized the camera, the LCD shows the following message.

```
Access Denied
```

3. Press ▲ or ▼ to choose ID. Press **OK**.

4. Enter the password. Press **OK**.

```
Change ID
PIN:XXXX
```

**Note**

If your ID has restricted options, the following messages appear on the LCD.

| Message | Meaning |
|---|---|
| Access Denied | Printing documents directly from a camera to the Brother machine is restricted. |
| Limit Exceeded | The number of pages you are allowed to print is exceeded. The print job will be canceled. |
| Mono Print Only | Printing color documents is restricted. |
| Not Available | Printing pictures directly from a camera to the Brother machine is restricted. |

5 The LCD shows one of the following messages, depending on which mode the machine is in:

```
04/20 15:30 Fax
Camera Connected
```

```
Scan:Select ▲▼
Camera Connected
```

```
Stack  Copies:02
Camera Connected
```

6 Set your camera to print an image. Set the number of copies if you are asked. When the machine starts printing an image, the LCD will show the following message:

```
PictBridge
Printing. Kee...
```

**Note**

Please refer to the documentation supplied with your camera for detailed operations how to print using PictBridge.

**IMPORTANT**

DO NOT remove the digital camera from the USB direct interface until the printer has finished printing.

# Connecting a camera as a storage device

Even if your camera is not in PictBridge mode, or does not support PictBridge, you can connect your camera as a normal storage device. This enables you to print photos from your camera.

Follow the steps in *Printing data directly from the USB Flash memory drive (MFC-9325CW only)* on page 100.

(If you would like to print photos in PictBridge mode, see *Setting your digital camera* on page 94.)

**Note**

The name of the storage mode and operation differs among digital cameras. Please refer to the documentation supplied with your camera for detailed information, such as how to switch from PictBridge mode to mass storage mode.

# Understanding the error messages

Once you are familiar with the types of errors that can occur while you are using the PictBridge, you can easily identify and troubleshoot any problems.

- `Out of Memory`

  This message will appear if you are working with images that are too large for the machine's memory.

- `Unusable Device`

  This message will appear if you connect an incompatible or broken device to the USB direct interface. To clear the error, unplug the device from the USB direct interface.

(For more detailed solutions, see *Error and maintenance messages* on page 144.)

# 14 Printing data from a USB Flash memory drive (MFC-9325CW only)

With the Direct Print feature, you do not need a computer to print data. You can print by just plugging your USB Flash memory drive into the machine's USB direct interface.

**Note**

Some USB Flash memory drives may not work with the machine.

## Supported file formats

Direct Print supports the following file formats:

- PDF version 1.7 [1]
- JPEG
- Exif + JPEG
- PRN (created by Brother driver)
- TIFF (scanned by all MFC or DCP Brother models)
- PostScript® 3™ (created by the Brother BRScript3 printer driver)
- XPS version 1.0

[1] PDF data that includes a JBIG2 image file, a JPEG2000 image file or a transparency file is not supported.

## Creating a PRN or PostScript® 3™ file for direct printing

**Note**

The screens in this section may vary depending on your application and operating system.

1. From the menu bar of an application, click **File**, then **Print**.
2. Choose **Brother MFC-XXXX Printer** (1) and check the **Print to file** box (2). Click **Print**.

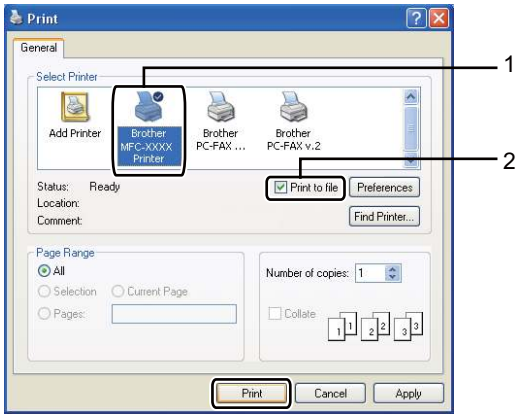


3. Choose the folder you want to save the file to and enter the file name if you are prompted to.
   If you are prompted for a file name only, you can also specify the folder you want to save the file in by entering the directory name. For example: C:\Temp\FileName.prn
   If you have a USB Flash memory drive or digital camera connected to your computer, you can save the file directly to the USB Flash memory drive.

# Printing data directly from the USB Flash memory drive (MFC-9325CW only)

1. Connect your USB Flash memory drive to the USB direct interface (1) on the front of the machine.
   The **Direct** key will light up. Press **Direct**. Your machine will enter Direct Print Mode.

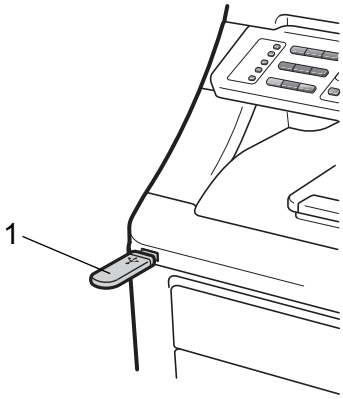


2. Press ▲ or ▼ to choose the folder name or file name you want to print.
   Press **OK**.
   If you have chosen the folder name, press ▲ or ▼ to choose the file name you want to print.
   Press **OK**.

```
Direct Print
1.FILE_1.PDF
```

**Note**

- If you want to print an index of the files, choose `Index Print`, and then press **OK**. Press **Black Start** or **Color Start** to print the data.
- File names that are stored in your USB Flash memory drive can be displayed the following characters on the LCD: A B C D E F G H I J K L M N O P Q R S T U V W X Y Z 0 1 2 3 4 5 6 7 8 9 $ % ' ` - @ { } ~ ! # ( ) & _ ^

3. Do one of the following:
   - Press ▲ or ▼ to choose a setting you need to change and press **OK**, and then press ▲ or ▼ to choose an option for the setting and press **OK**.
   - If you do not need to change the current default settings, go to step ❹.

```
Print File Set
Paper Size      ⇕
```

**Note**

- You can choose the following settings:

  `Paper Size`

  `Media Type`

  `Multiple Page`

  `Orientation`

  `Collate`

  `Print Quality`

  `PDF Option`
- Depending on the file type, some of these settings may not appear.

4. Press **Black Start** or **Color Start** if you have finished.

5. Press the dial pad key to enter the number of copies you want.
   Press **OK**.

```
Copies
=  1
```

6 Press **Black Start** or **Color Start** to print the data.

**IMPORTANT**

- To prevent damage to your machine, DO NOT connect any device other than a digital camera or USB Flash memory drive to the USB direct interface.
- DO NOT remove the USB Flash memory drive or digital camera from the USB direct interface until the machine has finished printing.

**Note**

You can change the default settings for Direct Print by using the control panel when the machine is not in the Direct Print mode. Press **Menu**, **5** to enter the `USB Direct I/F` menu. (See *Entering text* on page 219.)

# Printing data directly from the USB flash memory drive with Secure Function Lock 2.0 enabled (MFC-9325CW only)

For more information about Secure Function Lock 2.0, see Chapter 11 of the Network User's Guide on the CD-ROM we have supplied.

1 Connect your USB Flash memory drive to the USB direct interface (1) on the front of the machine.
The **Direct** key will light up. Press **Direct**. Your machine will enter Direct Print Mode.

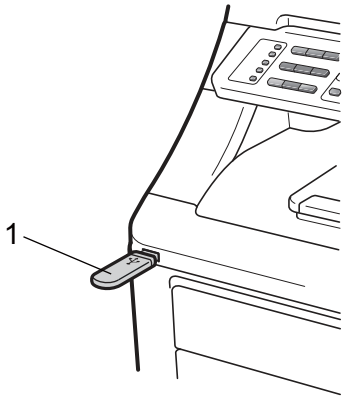


2 The following message appears if Secure Function Lock is on.

```
Access Denied
```

3 Press ▲ or ▼ to choose ID. Press **OK**.

4 Enter the password. Press **OK**.

```
Change ID
PIN:XXXX
```

**Note**

If your ID has the restricted options, the following messages appear on the LCD.

| Message | Meaning |
|---|---|
| Access Denied | Printing documents directly from the USB flash memory drive to the Brother machine is restricted. |
| Limit Exceeded | The number of pages you are allowed to print is exceeded. The print job will be canceled. |
| No Permission | Printing color documents is restricted. The print job will be canceled. |
| Mono Print Only | Printing color documents is restricted. |
| Not Available | Printing pictures directly from the USB Flash memory drive to the Brother machine is restricted. |

5 The file names appear if the password is correct.

6 Press ▲ or ▼ to choose the folder name or file name you want to print.
Press **OK**.
If you have chosen the folder name, press ▲ or ▼ to choose the file name you want to print.
Press **OK**.

```
Direct Print
1.FILE_1.PDF
```

**Note**

- If you want to print an index of the files, choose `Index Print`, and then press **OK**. Press **Black Start** or **Color Start** to print the data.
- File names containing more than 8 characters will appear on the LCD as the first 6 characters of the file name followed by a tilde mark (~) and a number.
For example, “HOLIDAY2007.JPG” would appear as “HOLIDA~1.JPG”.
Only the following characters can be displayed on the LCD:
A B C D E F G H I J K L M N O P Q R S T U V W X Y Z 0 1 2 3 4 5 6 7 8 9 $ % ' ` - @ { } ~ ! # ( ) & _ ^

7 Do one of the following:

- Press ▲ or ▼ to choose a setting you need to change and press **OK**, and then press ▲ or ▼ to choose an option for the setting and press **OK**.
- If you do not need to change the current default settings, go to step ❽.

```
Print File Set
Paper Size      ⇕
```

**Note**

- You can choose the following settings:

  `Paper Size`

  `Media Type`

  `Multiple Page`

  `Orientation`

  `Collate`

  `Print Quality`

  `PDF Option`

- Depending on the file type, some of these settings may not appear.

8 Press **Black Start** or **Color Start** if you have finished.

9 Press the dial pad key to enter the number of copies you want.
Press **OK**.

```
Copies
=  1
```

10 Press **Black Start** or **Color Start** to print the data.

**IMPORTANT**

DO NOT remove the USB flash memory from the USB direct interface until the printer has finished printing.

# Understanding the error messages

Once you are familiar with the types of errors that can occur while you print data from the USB Flash memory drive with Direct Print, you can easily identify and troubleshoot any problems.

- `Out of Memory`

  This message will appear if you are working with images that are too large for the machine's memory.

- `Unusable Device`

  This message will appear if you connect an incompatible or broken device to the USB direct interface. To clear the error, unplug the device from the USB direct interface.

(See *Error and maintenance messages* on page 144 for the detailed solution.)

Section V

# Software

**Software and Network features** 106

# 15 Software and Network features

The User's Guide on the CD-ROM includes the **Software User's Guide** and **Network User's Guide** for features available when connected to a computer (for example, printing and scanning). These guides have easy to use links that, when clicked, will take you directly to a particular section.

You can find information on these features:

- Printing
- Scanning
- ControlCenter3 (Windows®)
- ControlCenter2 (Macintosh)
- Remote Setup
- Faxing from your computer
- Network Faxing
- Network Printing
- Network Scanning
- Wireless Network Users

  (MFC-9325CW only)

**Note**

See *Accessing the Software User's Guide and Network User's Guide* on page 3.

Section VI

# Appendixes


| | |
|---|---|
| **Safety and legal** | 108 |
| **Options** | 125 |
| **Troubleshooting and routine maintenance** | 128 |
| **Menu and features** | 197 |
| **Specifications** | 221 |
| **Glossary** | 240 |

# A Safety and legal

## Compilation and Publication

Under the supervision of Brother Industries, Ltd., this manual has been compiled and published, covering the latest product descriptions and specifications.

The contents of this manual and the specifications of this product are subject to change without notice.

Brother reserves the right to make changes without notice in the specifications and materials contained herein and shall not be responsible for any damages (including consequential) caused by reliance on the materials presented, including but not limited to typographical and other errors relating to the publication.

## Choosing a location

Put your product on a flat, level, stable surface that is free of vibration and shocks, such as a desk. Put the product near a telephone wall jack and a standard grounded AC power outlet. Choose a location where the temperature remains between 50°F and 90.5°F (10°C and 32.5°C) and the humidity is between 20% to 80% (without condensation).

**WARNING**

DO NOT expose the product to direct sunlight, excessive heat, open flames, corrosive gasses, moisture or dust. Doing so may create a risk of an electrical short or fire. It may also damage the product and/or render it inoperable.

---

DO NOT place the product near heaters, air conditioners, electrical fans, refrigerators, or water. Doing so may create the risk of a short circuit or fire, should water come into contact with the product (including condensation caused by heating, air conditioning, or ventilation equipment).

---

DO NOT place the product near chemicals. Should the chemicals come into contact with the product, there may be a risk of fire. The chemicals may also cause the product to malfunction or become discolored.

DO NOT put the product in a location where any slot or opening in the product is obstructed or blocked. These slots and openings are provided for ventilation. Blocking the product's ventilation could create a risk of overheating and/or fire.

Instead:

- Keep a gap of roughly 4 inches (100 mm) between the ventilation hole and the wall.
- Place the product on a solid surface.
- DO NOT place this product on a bed, sofa, rug, or other similar soft surface.
- DO NOT place this product near or over a radiator or heater.
- DO NOT place this product in a "built-in" installation unless adequate ventilation is provided.

DO NOT put objects on top of the product. Doing so could increase the risk of overheating and/or fire should the product malfunction.

DO install your product near an AC power outlet that is easily accessible. In the event of an emergency, easy access to the plug and outlet will allow you to shut off power to the product quickly and completely.

Plastic bags are used in the packing of your product and drum unit. Plastic bags are not toys. To avoid the danger of suffocation, keep these bags away from babies and children and dispose of them properly.

To reduce the risk of shock or fire, use only a No. 26 AWG or larger telecommunication line cord.

Use caution when installing or modifying telephone lines. Never touch telephone wires or terminals that are not insulated unless the telephone line has been unplugged at the wall jack. Never install telephone wiring during a lightning storm. Never install a telephone wall jack in a wet location.

## ⚠ CAUTION

Avoid placing your product in a high-traffic area. If you must place it in a high-traffic area, ensure that the product is in a safe location where it cannot be accidentally knocked-over, which could cause injury to you and serious damage to the product. Also ensure that cords are secured so as not to pose a tripping hazard. DO NOT place this product on an unstable cart, stand, or table. The product is heavy and may fall, causing injury to you, and serious damage to the product.

## IMPORTANT

- DO NOT place your product next to devices that contain magnets or generate magnetic fields. Doing so may interfere with the operation of the product, causing print quality problems.
- DO NOT place your product next to sources of interference, such as speakers or the base units of non Brother cordless telephones. Doing so may interfere with the operation of the product's electronic components.
- DO NOT connect your product to an AC power outlet controlled by wall switches or automatic timers. Disruption of power can delete information from the product's memory.
- DO NOT connect your product to an AC power outlet on the same circuit as large appliances or other equipment that requires a significant amount of electricity to operate. Operating this product in conjunction with the other product(s) could create an overvoltage, tripping your circuit breaker or blowing your fuse.

# To use the product safely

Please keep these instructions for later reference and read them before attempting any maintenance. If you do not follow these safety instructions, there is a possibility of a fire, electrical shock, burn or suffocation.

## ⚠ WARNING

ELECTRICAL HAZARDS

*Failure to follow the warnings in this section may create the risk of an electrical shock. In addition, you could create an electrical short, which may create the risk of a fire.*

---

There are high voltage electrodes inside the product. Before you access the inside of the product, including for routine maintenance such as cleaning, make sure you have unplugged the telephone line cord first and then the power cord from the AC power outlet, as well as any telephone (RJ-11) or Ethernet (RJ-45) cables from the product. Never push objects of any kind into this product through cabinet slots, since they may touch dangerous voltage points or short out parts.

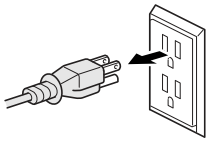

---

DO NOT handle the plug with wet hands.

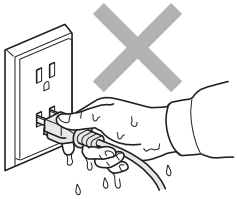

Always make sure the plug is fully inserted. DO NOT use the product or handle the cord if the cord has become worn or frayed.

---

DO NOT touch this product during an electrical storm.

---

DO NOT allow this product to come into contact with water. This product should not be used around standing water including a bathtub, sink, or swimming pool, around appliances containing water including a refrigerator, or in a wet basement.

This product should be connected to an AC power source within the range indicated on the rating label. DO NOT connect it to a DC power source or inverter. If you are not sure what kind of power source you have, contact a qualified electrician.

Always disconnect all cables from the wall outlet before servicing, modifying or installing the equipment.

Power Cord Safety:

- This product is equipped with a 3-wire grounded plug. This plug will only fit into a grounded power outlet. This is a safety feature. If you are unable to insert the plug into the outlet, call your electrician to replace your obsolete outlet. DO NOT defeat the purpose of the grounded plug.
- Use only the power cord supplied with this product.
- DO NOT allow anything to rest on the power cord. DO NOT place this product where people can walk on the cord. DO NOT place this product in a position where the cord is stretched or strain is otherwise put on the cord. Doing so may cause the cord to become worn or frayed.
- If an extension cord is used with this product, make sure that the total ampere ratings on the products plugged into the extension cord do not exceed the extension cord ampere rating. Also, make sure that the total of all products plugged into the AC power outlet does not exceed 15 amperes.
- The power cord, including extensions, should be no longer than 16.5 feet (5 meters).
- We DO NOT advise using an extension cord.

Use caution when installing or modifying telephone lines. Never touch telephone wires or terminals that are not insulated unless the telephone line has been unplugged at the wall jack.

Never install telephone wiring during a lightning storm. Never install a telephone wall jack in a wet location.

FIRE HAZARDS

DO NOT use flammable substances, any type of spray, or an organic solvent/liquid that containing alcohol or ammonia to clean the inside or outside of the product. Doing so could cause a fire. Instead, use only a dry, lint-free cloth. See *Routine maintenance* on page 157 for more information on how to clean the product.

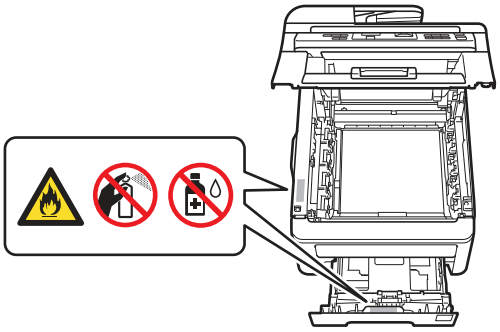

---

DO NOT attempt to operate this product with a paper jam or with stray pieces of paper inside the product. Prolonged contact of the paper with the drum unit could cause a fire.

---

DO NOT use a vacuum cleaner to clean up scattered toner. Doing this might cause the toner dust to ignite inside the vacuum cleaner, potentially starting a fire. Please carefully clean the toner dust with a dry, lint-free soft cloth and dispose of it according to local regulations.

---

DO NOT use this product in the vicinity of a gas leak or combustible dust.

---

DO NOT inhale the toner powder. If toner powder is inhaled, please follow these steps immediately:

- Move to an area with plenty of fresh air.
- Gargle and rinse your mouth out with plenty of water.
- If you develop a cough or any other symptoms soon after inhaling the toner, consult your doctor immediately.

If toner powder is swallowed, rinse your mouth immediately and drink plenty of fresh water to dilute the toner. Then consult your doctor immediately thereafter. For more safety information regarding the toners used in your product, please visit the following web address to read the Safety Data Sheets http://sds.brother.co.jp/sdsapp/index.html, which include important information about the chemical composition of the toners and the precautions to take in case of overexposure to toner.

---

### HOT SURFACE

After you have just used the product, some internal parts will be extremely hot. To prevent injury, DO NOT touch the shaded parts shown in the illustration, when you open the top or back cover (back output tray) of the machine.

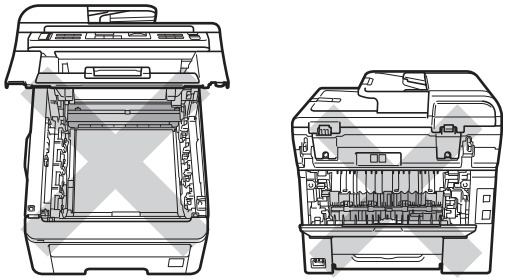

---

DO NOT touch the shaded parts shown in the illustration. These rollers may be rotating at high speed and can pinch or entrap your hand.

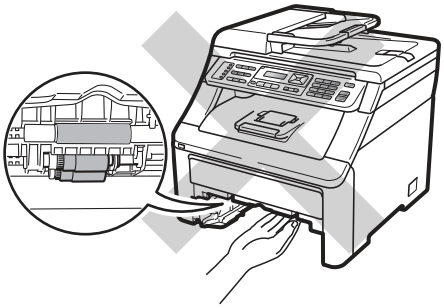

---

This product is heavy and weighs approximately 50.5 lb (22.9 kg). To prevent injuries when moving or lifting this machine, make sure to use at least two people. Be careful not to pinch your fingers when you set the machine back down.

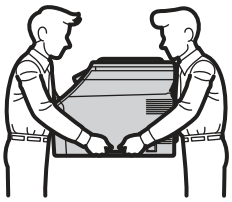

## ⚠ CAUTION

DO NOT put your hands on the edge of the product under the document cover, the scanner, or the top cover as shown in the illustrations. Doing this may cause injury to your fingers by pinching them.

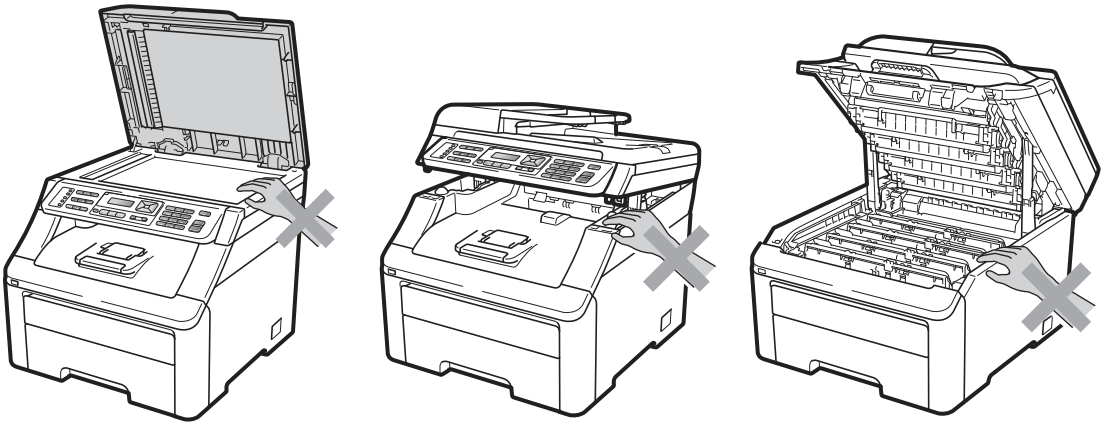

DO NOT put your fingers in the areas shown in the illustrations. Doing this may cause injury to your fingers by pinching them.

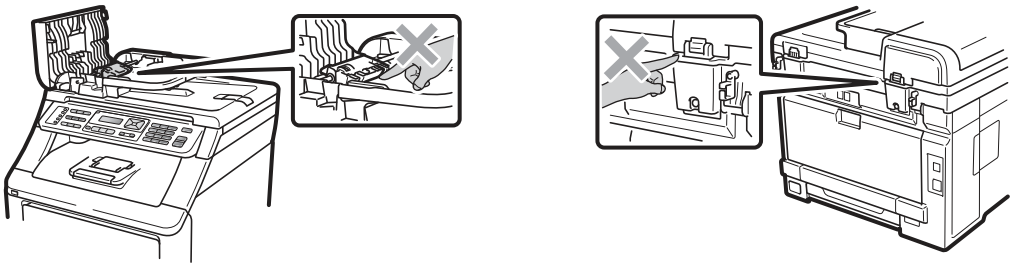

## IMPORTANT

DO NOT remove or damage the caution labels located on or in the product.

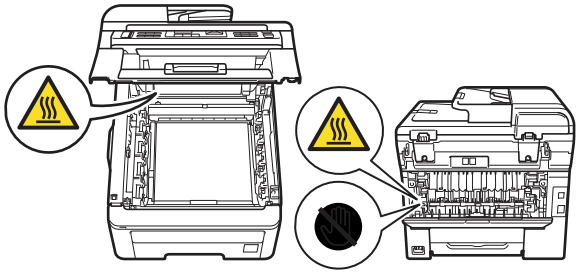

### Note

Lightning and power surges can damage this product. We recommend that you use a quality surge protection device on the AC power line and any telephone (RJ-11) or Ethernet (RJ-45) cable plugged into the product, or that you unplug the cords during a lightning storm.

## Important safety instructions

1 Read all of these instructions.

2 Save these instructions for later reference.

3 Follow all warnings and instructions marked on the product.

4 Be careful not to inhale toner.

5 DO NOT place anything in front of the product that will block printed pages or received faxes. DO NOT place anything in the path of printed pages or received faxes.

6 Wait until pages have exited the product before picking them up.

7 DO NOT attempt to service this product yourself because opening or removing covers may expose you to dangerous voltage points and other risks and may void your warranty. Refer all servicing to a Brother Authorized Service Center. For the location of your nearest Brother Authorized Service Center, please call:

**In USA**: 1-877-BROTHER (1-877-276-8437)

**In Canada**: 1-877-BROTHER

8 Unplug this product from the AC power outlet and refer all servicing to Brother Authorized Service Personnel under the following conditions:

- When the power cord is damaged or frayed. (DO NOT touch the damaged/frayed part while unplugging your product.)
- If liquid has been spilled into the product.
- If the product has been exposed to rain or water.
- If the product does not operate normally when the operating instructions are followed. Adjust only those controls that are covered by the operating instructions. Improper adjustment of other controls may result in damage and will often require extensive work by a qualified technician to restore the product to normal operation.
- If the product has been dropped or the cabinet has been damaged.
- If the product exhibits a distinct change in performance, indicating a need for service.

# Regulation

## Standard telephone and FCC notices

**These notices are in effect on models sold and used in the United States only.**

**When programming emergency numbers or making test calls to emergency numbers:**

- Remain on the line and briefly explain to the dispatcher the reason for the call before hanging up.
- Perform these activities in the off-peak hours, such as early morning or late evening.

This equipment complies with Part 68 of the FCC rules and the requirements adopted by the ACTA. On the backside of this equipment is a label that contains, among other information, a product identifier in the format US: AAAEQ##TXXXX. If requested, this number must be provided to the telephone company.

You may safely connect this equipment to the telephone line by means of a standard modular jack, USOC RJ11C.

A plug and jack used to connect this equipment to the premises wiring and telephone network must comply with the applicable FCC Part 68 rules and requirements adopted by the ACTA. A compliant telephone cord and modular plug is provided with this product. It is designed to be connected to a compatible modular jack that is also compliant. (See installation instructions for details.)

The REN is used to determine the number of devices that may be connected to a telephone line. Excessive RENs on a telephone line may result in the devices not ringing in response to an incoming call. In most but not all areas, the sum of RENs should not exceed five (5.0). To be certain of the number of devices that may be connected to a line, as determined by the total RENs, contact the local telephone company. For products approved after July 23, 2001, the REN for this product is part of the product identifier that has the format US:AAAEQ##TXXXX.The digits represented by ## are the REN without a decimal point (e.g., 06 is a REN of 0.6). For earlier products, the REN is separately shown on the label.

If this equipment causes harm to the telephone network, the telephone company will notify you in advance that temporary discontinuance of service may be required. But if advance notice is not practical, the telephone company will notify the customer as soon as possible. Also, you will be advised of your right to file a complaint with the FCC if you believe it is necessary.

The telephone company may make changes in its facilities, equipment, operations or procedures that could affect the operation of the equipment. If this happens the telephone company will provide advance notice in order for you to make necessary modifications to maintain uninterrupted service.

If trouble is experienced with this equipment, for repair or warranty information, please contact Brother Customer Service. (See *Brother numbers* on page i) If the equipment is causing harm to the telephone network, the telephone company may request that you disconnect the equipment until the problem is resolved.

Connection to party line service is subject to state tariffs. Contact the state public utility commission, public service commission or corporation commission for information.

If your home has specially wired alarm equipment connected to the telephone line, ensure the installation of this equipment does not disable your alarm equipment. If you have questions about what will disable alarm equipment, call your telephone company or a qualified installer.

If you are not able to solve a problem with your product, call Brother Customer Service. (See *Brother numbers* on page i)

**WARNING**

For protection against the risk of electrical shock, always disconnect all cables from the wall outlet before servicing, modifying or installing the equipment.

**IMPORTANT**

- This equipment may not be used on coin service lines provided by the telephone company or connected to party lines.
- Brother cannot accept any financial or other responsibilities that may be the result of your use of this information, including direct, special or consequential damages. There are no warranties extended or granted by this document.
- This product has been certified to comply with FCC standards, which are applied to the USA only. A grounded plug should be plugged into a grounded AC power outlet after checking the rating of the local power supply for the product to operate properly and safely.

## Federal Communications Commission (FCC) Declaration of Conformity (USA only)

| | |
|---|---|
| Responsible Party: | Brother International Corporation<br>100 Somerset Corporate Boulevard<br>Bridgewater, NJ 08807-0911 USA<br>TEL: (908) 704-1700 |

declares, that the products

Product Name: MFC-9125CN / MFC-9325CW

comply with Part 15 of the FCC Rules. Operation is subject to the following two conditions: (1) This device may not cause harmful interference, and (2) this device must accept any interference received, including interference that may cause undesired operation.

This equipment has been tested and found to comply with the limits for a Class B digital device, pursuant to Part 15 of the FCC Rules. These limits are designed to provide reasonable protection against harmful interference in a residential installation. This equipment generates, uses, and can radiate radio frequency energy and, if not installed and used in accordance with the instructions, may cause harmful interference to radio communications. However, there is no guarantee that interference will not occur in a particular installation. If this equipment does cause harmful interference to radio or television reception, which can be determined by turning the equipment off and on, the user is encouraged to try to correct the interference by one or more of the following measures:

- Reorient or relocate the receiving antenna.
- Increase the separation between the equipment and receiver.
- Connect the equipment into an outlet on a circuit different from that to which the receiver is connected.
- Call the dealer or an experienced radio/TV technician for help.
- (Wireless network models only)

  This transmitter must not be co-located or operated in conjunction with any other antenna or transmitter.

**IMPORTANT**

- Changes or modifications not expressly approved by Brother Industries, Ltd. could void the user's authority to operate the equipment.
- A shielded interface cable should be used to ensure compliance with the limits for a Class B digital device.

## Industry Canada Compliance Statement (Canada only)

This Class B digital apparatus complies with Canadian ICES–003.

Cet appareil numérique de la classe B est conforme à la norme NMB–003 du Canada.

Operation is subject to the following two conditions: (1) this device may not cause interference, and (2) this device must accept any interference, including interference that may cause undesired operation of this device.

L'utilisation de ce dispositif est autorisée seulement aux conditions suivantes:
(1) il ne doit pas produire de brouillage et (2) l'utilisateur du dispositif doit être prêt à accepter tout brouillage radioélectrique reçu, même si ce brouillage est susceptible de compromettre le fonctionnement du dispositif.

## EQUIPMENT ATTACHMENT LIMITATIONS (Canada only)

**NOTICE**

This product meets the applicable Industry Canada technical specifications.

Ce produit est conforme aux caractéristiques techniques appropriées d'Industrie Canada.

**NOTICE**

The Ringer Equivalence Number is an indication of the maximum number of devices allowed to be connected to a telephone interface. The termination on an interface may consist of any combination of devices subject only to the requirement that the sum of the RENs of all the devices does not exceed five.

L'indice d'équivalence de la sonnerie est une indication du nombre maximal d'appareils qu'il est permis de brancher sur une interface téléphonique. La terminaison d'une interface peut consister en n'importe quelle combinaison d'appareils à la condition que la somme des indices d'équivalence de la sonnerie de tous les appareils ne dépasse pas cinq.

## For use in the USA or Canada only

These machines are made for use in the USA and Canada only. We cannot recommend using them overseas because it may violate the Telecommunications Regulations of that country and the power requirements of your machine may not be compatible with the power available in foreign countries. Using USA or Canada models overseas is at your own risk and may void your warranty.

## Disconnect device

This product must be installed near an AC power outlet that is easily accessible. In case of emergencies, you must disconnect the power cord from the AC power outlet to shut off power completely.

## LAN connection

**⚠ CAUTION**

DO NOT connect this product to a LAN connection that is subject to over-voltages.

## International ENERGY STAR® Qualification Statement

The purpose of the International ENERGY STAR® Program is to promote the development and popularization of energy-efficient office equipment.

As an ENERGY STAR® Partner, Brother Industries, Ltd. has determined that this product meets the ENERGY STAR® specifications for energy efficiency.

# Trademarks

The Brother logo is a registered trademark of Brother Industries, Ltd.

Brother is a registered trademark of Brother Industries, Ltd.

Microsoft, Windows, Windows Server, Outlook and Internet Explorer are registered trademarks of Microsoft Corporation in the United States and/or other countries.

Windows Vista is either a registered trademark or a trademark of Microsoft Corporation in the United States and other countries.

Apple, Macintosh, Safari and TrueType are trademarks of Apple Inc., registered in the United States and other countries.

Intel, Intel Core and Pentium are trademarks of Intel Corporation in the U.S. and other countries.

AMD is a trademark of Advanced Micro Devices, Inc.

PowerPC is a registered trademark of IBM in the United States and/or other countries.

Adobe, Flash, Illustrator, Photoshop, PostScript and PostScript 3 are either registered trademarks or trademarks of Adobe Systems Incorporated in the United States and/or other countries.

Wi-Fi and Wi-Fi Alliance are registered trademarks of the Wi-Fi Alliance.

AOSS is a trademark of Buffalo Inc.

Nuance, the Nuance logo, PaperPort and ScanSoft are trademarks or registered trademarks of Nuance Communications, Inc. or its affiliates in the United States and/or other countries.

**Any trade names and product names of companies appearing on Brother products, related documents and any other materials are all trademarks or registered trademarks of those respective companies.**

# Open Source Licensing Remarks

This product includes open-source software.

Please see Open Source Licensing Remarks and Copyright information on the supplied CD-ROM.

(For Windows®) “X:\License.txt” (where X is your drive letter).

(For Macintosh) Double-click the CD-ROM icon on your desktop. Then double-click the **Utilities** icon. License.rtf will appear.

# Legal limitations for copying

Color reproductions of certain documents are illegal and may result in either criminal or civil liability. The listing below is intended to be a guide rather than a complete listing of every possible prohibition. In case of doubt, we suggest that you consult with the appropriate authority or advisor with regard to the specific document.

The following documents issued by the United States/ Canadian Government or any of its Agencies, States, Territories or Provineces may not be copied:

- Money
- Bonds or other certificates of indebtedness
- Certificates of Deposit
- Internal Revenue Stamps (canceled or uncanceled)
- Selective Service or draft papers
- Passports
- United States/Canadian Postage Stamps (canceled or uncanceled)
- Food Stamps
- Immigration Papers
- Checks or drafts drawn by Governmental agencies
- Identifying badges or insignias
- Licenses and Certificates of Title to motor vehicles, under certain State/Provincial law

Copying copyrighted works may be regulated by Federal, State or local laws. For more information,consult an appropriate authority or advisor.

# B Options

## Options

This machine has the following optional accessory. You can increase the capabilities of the machine with this item.

**SO-DIMM memory**

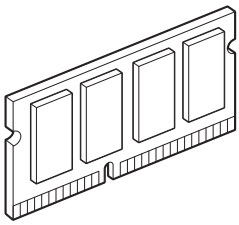

# Memory board

MFC-9325CW and MFC-9125CN have 64 MB of standard memory. They also have one slot for optional memory expansion. You can increase the memory up to a maximum of 576 MB by installing one SO-DIMM (Small Outline Dual In-line Memory Module). When you add the optional memory, it increases the performance for both copier and printer operations.

In general, the machine uses industry-standard SO-DIMM with the following specifications:

Type: 144 pin and 64 bit output

CAS latency: 2

Clock frequency: 100 MHz or more

Capacity: 64, 128, 256 or 512 MB

Height: 1.25 in. (31.75 mm)

Dram Type: SDRAM 2 Bank

For information regarding memory for your Brother machine please visit us at: www.brother-usa.com/support/memory.

**Note**

- There might be some SO-DIMMs that will not work with the machine.
- For more information, call Brother Customer Service.

## Installing extra memory

1. Turn off the machine's power switch. Unplug the telephone line cord.
2. Disconnect the interface cable from the machine, and then unplug the power cord from the AC power outlet.

**Note**

Be sure to turn off the machine's power switch before you install or remove the SO-DIMM.

3. Remove the plastic (1) and then metal (2) SO-DIMM covers.

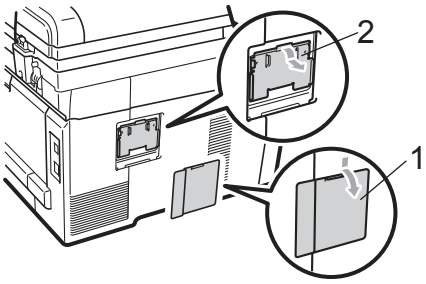


4. Unpack the SO-DIMM and hold it by its edges.

**IMPORTANT**

To prevent damage to the machine from static electricity, DO NOT touch the memory chips or the board surface.

5 Hold the SO-DIMM by the edges and align the notches in the SO-DIMM with the protrusions in the slot. Insert the SO-DIMM diagonally (1), then tilt it toward the interface board until it clicks into place (2).

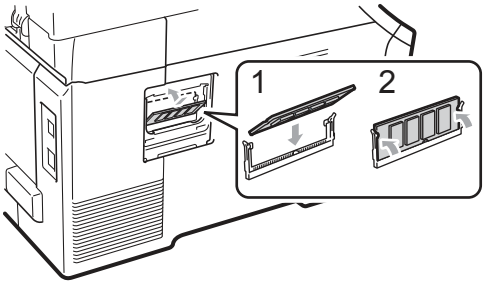


6 Put the metal (2) and then the plastic (1) SO-DIMM covers back on.

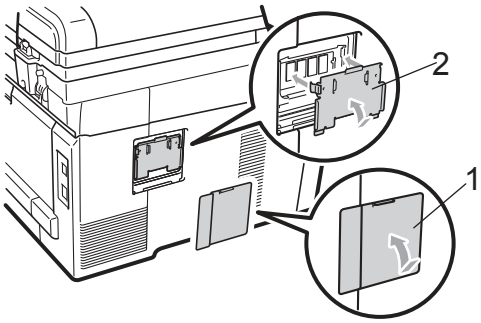


7 Plug the machine's power cord back into the AC power outlet first, and then connect the interface cable.

8 Plug in the telephone line cord. Turn on the machine's power switch.

**Note**

To make sure that you have installed the SO-DIMM properly, you can print the user settings page that shows the current memory size. (See *How to print a report* on page 83.)

# C Troubleshooting and routine maintenance

## Troubleshooting

**IMPORTANT**

For technical help, you must call the country where you bought the machine. Calls must be made ***from within*** that country.

### If you are having difficulty with your machine

If you think there is a problem, check the chart below and follow the troubleshooting tips. You can solve most problems by yourself.

If you need additional help, the Brother Solutions Center offers the latest FAQs and troubleshooting tips.

Visit us at http://solutions.brother.com/.

#### Printing or printing received faxes

| Difficulties | Suggestions |
|---|---|
| ■ Condensed print<br>■ Horizontal streaks<br>■ Top and bottom sentences are cut off<br>■ Missing lines | Usually this is caused by a poor telephone connection. If your copy looks good, you probably had a bad connection, with static or interference on the telephone line. Ask the other party to send the fax again. |
| Poor print quality | See *Improving the print quality* on page 136. |
| Vertical black lines when receiving | The corona wires for printing may be dirty. Clean the corona wires on the four drum units. (See *Cleaning the corona wires* on page 160.) |
| | The sender's scanner may be dirty. Ask the sender to make a copy to see if the problem is with the sending machine. Try receiving from another fax machine. |
| | If the problem continues, call Brother Customer Service at 1-877-BROTHER (1-877-276-8437) (**in USA**) or 1-877-BROTHER (**in Canada**). |
| Received faxes appear as split or blank pages. | If the received faxes are divided and printed on two pages or if you get an extra blank page, your paper size setting may not be correct for the paper you are using. (See *Paper Size* on page 25.) |
| | Turn on Auto Reduction. (See *Printing a reduced incoming fax* on page 51.) |

## Telephone line or connections

| Difficulties | Suggestions |
|---|---|
| Dialing does not work. | Check for a dial tone. |
| | Change `Tone/Pulse` setting. (See the *Quick Setup Guide*.) (Canada only) |
| | Check all line cord connections. |
| | Check that the machine is plugged in and switched on. |
| | Send a manual fax by pressing **Hook** or by lifting the handset of an external telephone and dialing the number. Wait to hear fax receiving tones before pressing **Black Start** or **Color Start**. |
| The machine does not answer when called. | Make sure the machine is in the correct receive mode for your setup. (See *Receive Mode settings* on page 49.) Check for a dial tone. If possible, call your machine to hear it answer. If there is still no answer, check the telephone line cord connection. If you do not hear ringing when you call your machine, ask your telephone company to check the line. |

## Receiving Faxes

| Difficulties | Suggestions |
|---|---|
| Cannot receive a fax. | Make sure your machine has a dial tone by pressing the **Hook** key. If you hear static or interference on your fax line, please contact your local telephone company. |
| | Check all line cord connections. Make sure the telephone line cord is plugged into the telephone wall jack and the LINE jack of the machine. If you subscribe to DSL or VoIP services, please contact your service provider for connection instructions. |
| | Make sure the machine is in the correct Receive Mode. This is determined by the external devices and telephone subscriber services you have on the same line as the Brother machine. (See *Receive Mode settings* on page 49.)<br><br>If you have a dedicated fax line and want your Brother machine to automatically answer all incoming faxes, you should select `Fax Only` mode.<br><br>If your Brother machine shares a line with an external answering machine, you should select the `External TAD` mode. In `External TAD` mode, your Brother machine will automatically receive incoming faxes and voice callers will be able to leave a message on your answering machine.<br><br>If your Brother machine shares the line with a Voice Mail subscriber service, please see *Voice Mail* on page 53.<br><br>If your Brother machine is on a line with the Distinctive Ring subscriber service, please see *Distinctive Ring* on page 54.<br><br>If your Brother machine shares a line with other telephones and you want it to automatically answer all incoming faxes, you should select the `Fax/Tel` mode. In `Fax/Tel` mode, your Brother machine will automatically receive faxes and produce a pseudo/double-ring to alert you to answer voice calls.<br><br>If you do not want your Brother machine to automatically answer any incoming faxes, you should select the `Manual` mode. In `Manual` mode, you must answer every incoming call and activate the machine to receive faxes. |

## Receiving Faxes (continued)

| Difficulties | Suggestions |
|---|---|
| Cannot receive a fax.<br>(continued) | Another device or service at your location may be answering the call before your Brother machine answers. To test this, lower the ring delay setting:<br>■ If the answer mode is set to `Fax Only` or `Fax/Tel`, reduce the ring delay to 1 ring. (See *Ring Delay* on page 49.)<br>■ If the answer mode is set to `External TAD`, reduce the number of rings programmed on your answering machine to 2.<br>■ If the answer mode is set to `Manual`, DO NOT adjust the ring delay setting.<br>Have someone send you a test fax:<br>■ If you received the test fax successfully, your machine is operating properly. Remember to reset your ring delay or answering machine setting back to your original setting. If receiving problems recur after resetting the ring delay, then a person, device, or subscriber service is answering the fax call before the machine has a chance to answer.<br>■ If you were not able to receive the fax, then another device or subscriber service may be interfering with your fax reception or there may be a problem with your fax line. |
| | If you are using a telephone answering machine (`External TAD` mode) on the same line as the Brother machine, make sure your answering machine is set up correctly. (See *Connecting an external TAD (telephone answering device)* on page 57.)<br>1 Plug the telephone line cord directly from the wall telephone jack to your Brother machine's LINE jack.<br>2 Remove the protective cap from your Brother machine's EXT jack, and then plug the telephone line cord from your answering machine into the EXT jack.<br>3 Set your answering machine to answer within 4 rings.<br>If you are having problems receiving faxes or voice messages, set your answering machine to answer within 2 or 3 rings.<br>4 Record the outgoing message on your answering machine.<br>■ Record five seconds of silence at the beginning of your outgoing message.<br>■ Limit your speaking to 20 seconds.<br>■ End your outgoing message with your Fax Receive Code for people sending manual faxes. For example: "After the beep, leave a message or press ∗**51** and Start to send a fax."<br>5 Set your answering machine to answer calls.<br>6 Set your Brother machine's Receive Mode to `External TAD`. (See *Receive Mode settings* on page 49.) |
| | Make sure your Brother machine's Easy Receive feature is turned On. Easy Receive is a feature that allows you to receive a fax even if you have answered the call on an external or extension telephone. (See *Easy Receive* on page 50.) |
| | If you often get transmission errors due to possible interference on the telephone line, try changing the Compatibility setting to `Basic(for VoIP)`. (See *Telephone line interference/ VoIP* on page 143.) |
| | (For MFC-9325CW only) Contact your administrator to check your Secure Function Lock Settings. |

## Sending faxes

| Difficulties | Suggestions |
|---|---|
| Poor sending quality. | Try changing your resolution to `Fine` or `S.Fine`. Make a copy to check your machine's scanner operation. If the copy quality is not good, clean the scanner. (See *Cleaning the scanner* on page 158.) |
| Transmission Verification Report says `RESULT:NG`. | There is probably temporary noise or static on the line. Try sending the fax again. If you are sending a PC Fax message and get `RESULT:NG` on the Transmission Verification Report, your machine may be out of memory. To free up extra memory, you can turn off fax storage (see *Turning off Remote Fax Options* on page 75), print fax messages in memory (see *Printing a fax from the memory* on page 52) or cancel a delayed fax or polling job (see *Checking and canceling waiting jobs* on page 45). If the problem continues, ask the telephone company to check your telephone line. |
| | If you often get transmission errors due to possible interference on the telephone line, try changing the Compatibility setting to `Basic(for VoIP)`. (See *Telephone line interference/ VoIP* on page 143.) |
| Sent faxes are blank. | Make sure you are loading the document properly. (See *Loading documents* on page 23.) |
| Vertical black lines when sending. | Black vertical lines on faxes you send are typically caused by dirt or correction fluid on the glass strip. (See *Cleaning the scanner* on page 158.) |
| Cannot send a fax. | (For MFC-9325CW only) Contact your administrator to check your Secure Function Lock Settings. |

## Handling incoming calls

| Difficulties | Suggestions |
|---|---|
| The machine 'Hears' a voice as a CNG Tone. | If Easy Receive is set to On, your machine is more sensitive to sounds. It may mistakenly interpret certain voices or music on the line as a fax machine calling and respond with fax receiving tones. Deactivate the machine by pressing **Stop/Exit**. Try avoiding this problem by turning Easy Receive to Off. (See *Easy Receive* on page 50.) |
| Sending a Fax Call to the machine. | If you answered on an external or extension telephone, press your Fax Receive Code (default setting is ∗51). When your machine answers, hang up. |
| Custom features on a single line. | If you have Call Waiting, Call Waiting/Caller ID, Caller ID, RingMaster, Voice Mail, an answering machine, an alarm system or other custom feature on a single telephone line with your machine, it may create a problem sending or receiving faxes.<br><br>**For Example:** If you subscribe to Call Waiting or some other custom service and its signal comes through the line while your machine is sending or receiving a fax, the signal can temporarily interrupt or disrupt the faxes. Brother's ECM feature should help overcome this problem. This condition is related to the telephone system industry and is common to all devices that send and receive information on a single, shared line with custom features. If avoiding a slight interruption is crucial to your business, a separate line with no custom features is recommended. |

## Menu access difficulties

| Difficulties | Suggestions |
|---|---|
| The machine beeps when you try to access the Setup Receive and Setup Send menus. | If **FAX** is not illuminated, press it to turn on Fax mode. The Setup Receive setting (**Menu**, **2**, **1**) and Setup Send setting (**Menu**, **2**, **2**) are available only when the machine is in Fax mode. |

## Copy difficulties

| Difficulties | Suggestions |
|---|---|
| Cannot make a copy. | ■ Make sure that **COPY** is illuminated. (See *Entering copy mode* on page 86.)<br>■ (For MFC-9325CW only) Contact your administrator to check your Secure Function Lock Settings. |
| Vertical black line appears in copies. | Black vertical lines on copies are typically caused by dirt or correction fluid on the glass strip, or the corona wire is dirty. (See *Cleaning the scanner* on page 158 and *Cleaning the corona wires* on page 160.) |
| Copies are blank. | Make sure you are loading the document properly. (See *Using the automatic document feeder (ADF)* on page 23 or *Using the scanner glass* on page 24.) |

## Printing difficulties

| Difficulties | Suggestions |
|---|---|
| No printout. | ■ Check that the machine is plugged in and the power switch is turned on.<br>■ Check that the toner cartridge and drum unit are installed properly. (See *Replacing the drum units* on page 177.)<br>■ Check the interface cable connection on both the machine and your computer. (See the *Quick Setup Guide*.)<br>■ Check that the correct printer driver has been installed and chosen.<br>■ Check to see if the LCD is showing an error message. (See *Error and maintenance messages* on page 144.)<br>■ Check that the machine is online:<br>(Windows® 7 and Windows Server® 2008 R2) Click the **Start** button and **Devices and Printers**. Right-click **Brother MFC-XXXX Printer**. Make sure that **Use Printer Offline** is unchecked.<br>(Windows Vista®) Click the **Start** button, **Control Panel**, **Hardware and Sound**, and then **Printers**. Right-click **Brother MFC-XXXX Printer**. Make sure that **Use Printer Offline** is unchecked.<br>(Windows® XP and Windows Server® 2003/2008) Click the **Start** button and choose **Printers and Faxes**. Right-click **Brother MFC-XXXX Printer**. Make sure that **Use Printer Offline** is unchecked.<br>■ (For MFC-9325CW only) Contact your administrator to check your Secure Function Lock settings. |
| The machine prints unexpectedly or it prints garbage. | ■ Pull out the paper tray and wait until the machine stops printing. Then turn off the machine's power switch and disconnect from the power for several minutes. (The machine can be turned off for approximately 60 hours without losing faxes stored in the memory.)<br>■ Check the settings in your application to make sure it is set up to work with your machine. |
| The machine prints the first couple of pages correctly, then some pages have text missing. | ■ Check the settings in your application to make sure that it is set up to work with your machine.<br>■ Your computer is not recognizing the machine's input buffer's full signal. Make sure that you connected the interface cable correctly. (See the *Quick Setup Guide*.) |

## Printing difficulties (continued)

| Difficulties | Suggestions |
|---|---|
| The headers or footers appear when the document displays on the screen but they do not show up when it is printed. | There is an unprintable area on the top and bottom of the page. Adjust the top and bottom margins in your document to allow for this. (See *Unprintable area* on page 17.) |
| The machine is not printing or has stopped printing. | Press **Job Cancel**.<br>As the machine cancels the job and clears it from the memory it may produce an incomplete printout. |



## Scanning difficulties

| Difficulties | Suggestions |
|---|---|
| TWAIN errors appear while scanning. | Make sure that the Brother TWAIN driver is chosen as the primary source. In PaperPort™ 11SE, click **File**, **Scan or Get Photo** and choose the Brother TWAIN driver. |
| OCR does not work. | Try increasing the scanning resolution. |
| Network scanning does not work. | See *Network difficulties* on page 134. |
| Cannot scan. | (For MFC-9325CW only) Contact your administrator to check your Secure Function Lock Settings. |

## Software difficulties

| Difficulties | Suggestions |
|---|---|
| Cannot install software or print. | Run the **Repair MFL-Pro Suite** program on the CD-ROM. This program will repair and reinstall the software. |
| Cannot perform ‘2 in 1’ or ‘4 in 1’ printing. | Check that the paper size setting in the application and in the printer driver are the same. |
| The machine does not print from Adobe® Illustrator®. | Try to reduce the print resolution. (See *Advanced tab* in the *Software User’s Guide* on the CD-ROM.) |

## Paper handling difficulties

| Difficulties | Suggestions |
|---|---|
| The machine does not load paper.<br>The LCD shows `No Paper` or a Paper Jam message. | ■ If there is no paper, load a new stack of paper into the paper tray.<br>■ If there is paper in the paper tray, make sure it is straight. If the paper is curled, you should straighten it. Sometimes it is helpful to remove the paper, turn the stack over and put it back into the paper tray.<br>■ Reduce the amount of paper in the paper tray, and then try again.<br>■ Make sure that manual feed mode is not chosen in the printer driver.<br>■ Clean the paper pick-up roller. See *Cleaning the paper pick-up rollers* on page 166.<br>■ If the LCD shows the Paper Jam message and you still have a problem, see *Paper jams* on page 152. |
| The machine does not feed paper from the manual feed slot. | ■ Make sure that **Manual** is chosen in the printer driver.<br>■ Make sure the paper or print media is loaded properly in the manual feed slot. See *Loading paper in the manual feed slot* on page 13. |

## Paper handling difficulties (continued)

| Difficulties | Suggestions |
|---|---|
| How do I print on envelopes? | You can load envelopes from the manual feed slot. Your application must be set up to print the envelope size you are using. This is usually done in the Page Setup or Document Setup menu of your application. (See your application's manual for more information.) |
| What paper can I use? | You can use thin paper, plain paper, thick paper, bond paper, recycled paper, envelopes and labels that are made for laser machines. (For details, see *Acceptable paper and other print media* on page 18.) |
| There is a paper jam. | Clear the jammed paper. (See *Paper jams* on page 152.) |

## Print quality difficulties

| Difficulties | Suggestions |
|---|---|
| Printed pages are curled. | ■ Low quality thin or thick paper or not printing on the recommended side of the paper could cause this problem. Try turning over the stack of paper in the paper tray.<br>■ Make sure that you choose the Paper Type that suits the print media type you are using. (See *Acceptable paper and other print media* on page 18.) |
| Printed pages are smeared. | The Paper Type setting may be incorrect for the type of print media you are using, or the print media may be too thick or have a rough surface. (See *Acceptable paper and other print media* on page 18 and *Basic tab* in the *Software User's Guide* on the CD-ROM.) |
| Printouts are too light. | ■ If this problem occurs when making copies or printing received faxes, turn Toner Save mode to `Off` in the machine menu settings. (See *Toner Save* on page 27.)<br>■ Set Toner Save mode to `Off` in the **Advanced** tab in the printer driver. (See *Advanced tab* in the *Software User's Guide* on the CD-ROM.)<br>■ In the **Basic** tab of the printer driver, click the **Settings** button and check the **Enhance Black Printing** check box. |

## Network difficulties

| Difficulties | Suggestions |
|---|---|
| Cannot print over a wired Network. | If you are having Network problems see the *Network User's Guide* on the CD-ROM for more information.<br>Make sure your machine is powered on and is on-line and in the Ready mode. Print the Network Configuration list to see your current Network settings. (See *How to print a report* on page 83.) Reconnect the LAN cable to the hub to verify that the cable and network connections are good. If possible, try connecting the machine to a different port on your hub using a different cable. If the connections are good, the lower LED of the back panel of the machine will be green. |

## Network difficulties (continued)

| Difficulties | Suggestions |
|---|---|
| The network scanning feature does not work. | **(Windows®)**<br>If you are using personal firewall software, it may be necessary to set your third-party Security/Firewall Software to allow Network scanning. To add port 54925 for Network scanning, enter the information below:<br>■ In Name: Enter any description, for example Brother NetScan.<br>■ In Port number: Enter 54925.<br>■ In Protocol: UDP is selected.<br>Please refer to the instruction manual that came with your third-party Security/Firewall Software or contact the software manufacturer.<br>For more details, you can read FAQs and troubleshooting suggestions at http://solutions.brother.com/.<br>**(Macintosh)**<br>■ The network scanning feature may not work due to the firewall settings. Change or disable the firewall settings. If you are using a third-party personal Firewall software, see the User's Guide for your software or contact the software manufacturer.<br>■ Re-select your machine in the **Device Selector** application located in **Macintosh HD/Library/Printers/Brother/Utilities/Device Selector** or from the model list in **ControlCenter2**. |
| The network PC-Fax Receive feature does not work. | **(Windows® only)**<br>If you are using personal firewall software, it may be necessary to set your third-party Security/Firewall Software to allow PC-FAX Rx. To add port 54926 for Network PC-FAX Rx, enter the information below:<br>■ In Name: Enter any description, for example Brother PC-FAX Rx.<br>■ In Port number: Enter 54926.<br>■ In Protocol: UDP is selected.<br>Please refer to the instruction manual that came with your third-party Security/Firewall Software or contact the software manufacturer.<br>For more details, you can read FAQs and troubleshooting suggestions at http://solutions.brother.com/. |
| Your computer cannot find your machine. | **(Windows®)** The firewall setting on your PC may be rejecting the necessary network connection. (For details, see the instructions above.)<br>**(Macintosh)** Re-select your machine in the Device Selector application located in **Macintosh HD/Library/Printers/Brother/Utilities/DeviceSelector** or from the Model pop-up menu of ControlCenter2. |

## Other

| Difficulties | Suggestions |
|---|---|
| The machine will not turn on. | Adverse conditions on the power connection (such as lightning or a power surge) may have triggered the machine's internal safety mechanisms. Turn the machine off and unplug the power cord. Wait for ten minutes, then plug in the power cord and turn the machine on.<br>If the problem is not solved, turn off the machine. Plug the power cord into a different known working outlet and turn on the machine. |

## Improving the print quality

If you have a print quality problem, print a test page first (**Menu**, **4**, **2**, **3**). If the printout looks good, the problem is probably not the machine. Check the interface cable connections or try printing a different document. If the printout or test page printed from the machine has a quality problem, check the following steps first. And then, if you still have a print quality problem, check the chart below and follow the recommendation.

1. Check that you use the paper that meets our specifications. (See *Acceptable paper and other print media* on page 18.)

**Note**

To get the best print quality, we suggest using the recommended paper. (See *Recommended paper and print media* on page 18.)

2. Check that the drum units and toner cartridges are installed properly.

| Examples of poor print quality | Recommendation |
|---|---|
| White lines, bands or ribbing across the page 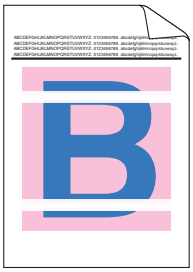 | ■ Put in a new drum unit. (See *Replacing the drum units* on page 177.) To identify the color of the drum unit, visit us at http://solutions.brother.com/ to view our FAQs and troubleshooting tips. |
| Colors are light or unclear on the whole page 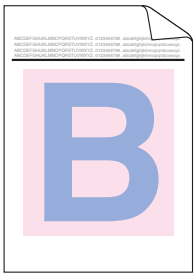 | ■ Make sure Toner Save mode is off in the control panel of the machine or the printer driver.<br>■ Make sure that you choose the proper media type in the printer driver or in the machine's Paper Type menu setting. (See *Acceptable paper and other print media* on page 18 and *Basic tab* in the *Software User's Guide* on the CD-ROM.)<br>■ Shake all four toner cartridges gently.<br>■ Wipe the windows of all four LED heads with a dry lint free soft cloth. (See *Cleaning the LED heads* on page 159.) |

| Examples of poor print quality | Recommendation |
|---|---|
| White streaks or bands down the page 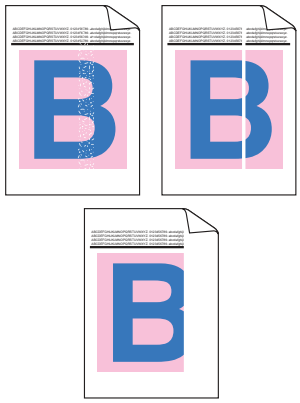 | ■ Wipe the windows of all four LED heads with a dry lint free soft cloth. (See *Cleaning the LED heads* on page 159.)<br>■ Make sure that foreign material such as a torn piece of paper, sticky note or dust is not inside the machine and around the drum unit and toner cartridge.<br>■ Clean all four drum units. (See *Cleaning the drum unit* on page 162.)<br>■ Identify the missing color and put in a new toner cartridge. (See *Replacing a Toner cartridge* on page 171.)<br>To identify the color of the toner cartridge, visit us at http://solutions.brother.com/ to view our FAQs and troubleshooting tips. |
| Colored streaks or bands down the page 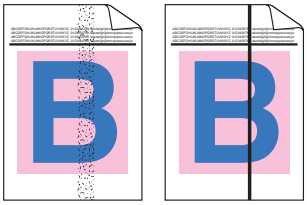 | ■ Clean all four corona wires (one for each color) inside the drum unit by sliding the green tab. (See *Cleaning the corona wires* on page 160.)<br>■ Make sure the corona wire cleaners are at their home positions (▲).<br>■ Clean the scanner glass and scanner glass strip. (See *Cleaning the scanner* on page 158.)<br>■ Replace the toner cartridge that matches the color of the streak or band. (See *Replacing a Toner cartridge* on page 171.)<br>To identify the color of the toner cartridge, visit us at http://solutions.brother.com/ to view our FAQs and troubleshooting tips.<br>■ Put in a new drum unit. (See *Replacing the drum units* on page 177.)<br>To identify the color of the drum unit, visit us at http://solutions.brother.com/ to view our FAQs and troubleshooting tips. |
| Vertical streaks in a light background 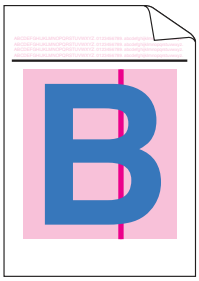 | ■ Wipe the windows of all four LED heads with a dry lint free soft cloth. (See *Cleaning the LED heads* on page 159.) |

| Examples of poor print quality | Recommendation |
|---|---|
| Colored lines across the page 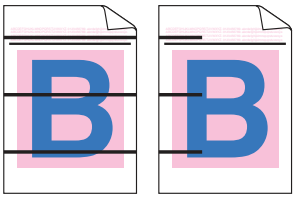 | ■ If colored lines appear at 1.2 in. (30 mm) intervals, replace the toner cartridge that matches the color of the line. (See *Replacing a Toner cartridge* on page 171.)<br>■ If colored lines appear at 3.7 in. (94 mm) intervals, put in a new drum unit that matches the color of the line. (See *Replacing the drum units* on page 177.) |
| White spots or hollow print | ■ If the problem is not solved after printing a few pages, the drum unit may be stained. Clean all four drum units. (See *Small spots on the printed pages* in *Cleaning the drum unit* on page 162.)<br>■ Make sure that the media type settings in the printer driver and in the machine's Paper Type menu matches the type of paper you are using. (See *Acceptable paper and other print media* on page 18 and *Basic tab* in the *Software User's Guide* on the CD-ROM.)<br>■ Check the machine's environment. Conditions such as high humidity can cause white spots or hollow print. (See *Choosing a location* on page 108.) |
| Completely blank or some colors are missing 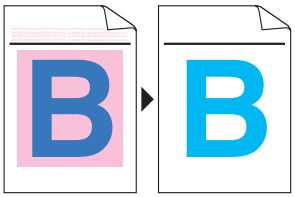 | ■ Put in a new toner cartridge. (See *Replacing a Toner cartridge* on page 171.)<br>To identify the color of the toner cartridge, visit us at http://solutions.brother.com/ to view our FAQs and troubleshooting tips.<br>■ Put in a new drum unit. (See *Replacing the drum units* on page 177.)<br>To identify the color of the drum unit, visit us at http://solutions.brother.com/ to view our FAQs and troubleshooting tips. |
| Colored spots at 94 mm 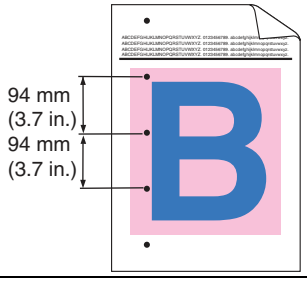  | ■ If the problem is not solved after printing a few pages, the drum unit may have glue from a label stuck on the drum surface. Clean the drum unit. (See *Large spots on the printed pages* on page 163.)<br>■ Put in a new drum unit. (See *Replacing the drum units* on page 177.)<br>To identify the color of the drum unit, visit us at http://solutions.brother.com/ to view our FAQs and troubleshooting tips. |
| Colored spots at 30 mm 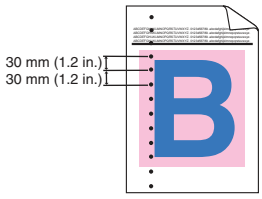  | ■ Identify the color causing the problem and put in a new toner cartridge. (See *Replacing a Toner cartridge* on page 171.)<br>To identify the color of the toner cartridge, visit us at http://solutions.brother.com/ to view our FAQs and troubleshooting tips. |

| Examples of poor print quality | Recommendation |
|---|---|
| Toner scatter or toner stain | ■ Check the machine's environment. Conditions such as high humidity and high temperatures may cause this print quality problem. (See *To use the product safely* on page 111.)<br>■ Identify the color causing the problem and put in a new toner cartridge. (See *Replacing a Toner cartridge* on page 171.)<br>To identify the color of the toner cartridge, visit us at http://solutions.brother.com/ to view our FAQs and troubleshooting tips.<br>■ If the problem continues, put in a new drum unit. (See *Replacing the drum units* on page 177.)<br>To identify the color of the drum unit, visit us at http://solutions.brother.com/ to view our FAQs and troubleshooting tips. |
| The color of your printouts is not what you expected | ■ Make sure Toner Save mode is off in the control panel of the machine or the printer driver.<br>■ Perform the calibration. (See *Calibration* on page 167.)<br>■ Adjust the color by using the custom setting in the driver and by using the control panel of the machine. Colors the machine can print and colors you see on a monitor are different. The machine may not be able to reproduce the colors on your monitor.<br>■ If colors appear in the printed gray areas, make sure there is a check in the **Improve Gray Color** check box of the printer driver. (See *Basic tab* for Windows® printer driver, *Advanced tab* for Macintosh printer driver or *Printer Features* for Macintosh BR-Script printer driver in the *Software User's Guide* on the CD-ROM.)<br>■ If shaded areas look dull, remove the check from the **Improve Gray Color** check box.<br>■ If a printed black graphic is too light, choose **Enhance Black Printing** mode in the printer driver. (See *Settings Dialog* for Windows® printer driver, *Advanced options* for Windows® BR-Script printer driver, *Print Settings* for Macintosh printer driver or *Printer Features* for Macintosh BR-Script printer driver in the *Software User's Guide* on the CD-ROM.)<br>■ Identify the color causing the problem and put in a new toner cartridge. (See *Replacing a Toner cartridge* on page 171.)<br>To identify the color of the toner cartridge, visit us at http://solutions.brother.com/ to view our FAQs and troubleshooting tips.<br>■ Identify the color causing the problem and put in a new drum unit. (See *Replacing the drum units* on page 177.)<br>To identify the color of the drum unit, visit us at http://solutions.brother.com/ to view our FAQs and troubleshooting tips. |

| Examples of poor print quality | Recommendation |
|---|---|
| All one color 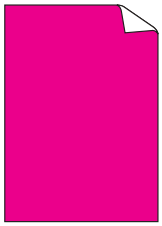 | ■ Identify the color causing the problem and put in a new drum unit. (See *Replacing the drum units* on page 177.)<br>To identify the color of the drum unit, visit us at http://solutions.brother.com/ to view our FAQs and troubleshooting tips. |
| Color misregistration 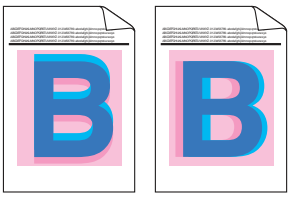 | ■ Make sure that the machine is on a solid level surface.<br>■ Perform the auto color registration using the control panel (see *Auto Registration* on page 168) or perform the manual color registration using the control panel (see *Manual Registration* on page 168).<br>■ Identify the color causing the problem and put in a new drum unit. (See *Replacing the drum units* on page 177.)<br>To identify the color of the drum unit, visit us at http://solutions.brother.com/ to view our FAQs and troubleshooting tips.<br>■ Put in a new belt unit. (See *Replacing the belt unit* on page 181.) |
| Uneven density appears periodically across the page | ■ Perform the calibration. (See *Calibration* on page 167.)<br>■ Adjust the contrast or brightness when you are in copy mode. (See *Adjusting Contrast, Color and Brightness* on page 89.)<br>■ Identify the color that is uneven and put in a new toner cartridge for that color. (See *Replacing a Toner cartridge* on page 171.)<br>To identify the color of the toner cartridge, visit us at http://solutions.brother.com/ to view our FAQs and troubleshooting tips.<br>■ Identify the color that is uneven and put in a new drum unit. (See *Replacing the drum units* on page 177.)<br>To identify the color of the drum unit, visit us at http://solutions.brother.com/ to view our FAQs and troubleshooting tips. |
| Thin lines do not print | ■ Make sure Toner Save mode is off in the control panel of the machine or the printer driver.<br>■ Change the print resolution.<br>■ If you use Windows® printer driver, choose **Improve Pattern Printing** or **Improve Thin Line** in **Settings** of **Basic** tab. (See *Settings Dialog* in the *Software User's Guide* on the CD-ROM.) |

| Examples of poor print quality | Recommendation |
|---|---|
| Wrinkle 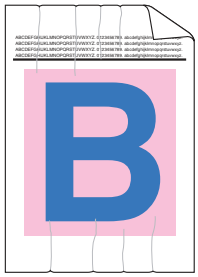 | ■ Change to the recommended type of paper.<br>■ Make sure that the back cover is closed properly.<br>■ Make sure that two gray levers inside the back cover are in the up position.<br>■ Make sure that the media type settings in the printer driver and in the machine's Paper Type menu matches the type of paper you are using. (See *Acceptable paper and other print media* on page 18 and *Basic tab* in the *Software User's Guide* on the CD-ROM.) |
| Offset image | ■ Make sure that the media type settings in the printer driver and in the machine's Paper Type menu matches the type of paper you are using. (See *Acceptable paper and other print media* on page 18 and *Basic tab* in the *Software User's Guide* on the CD-ROM.)<br>■ Make sure that two gray levers inside the back cover are in the up position.<br>■ Check the machine's environment. Conditions such as dry and low temperatures may cause this print quality problem. (See *Choosing a location* on page 108.)<br>■ Identify the color causing the problem and put in a new drum unit. (See *Replacing the drum units* on page 177.)<br>To identify the color of the drum unit, visit us at http://solutions.brother.com/ to view our FAQs and troubleshooting tips. |
| Poor fixing 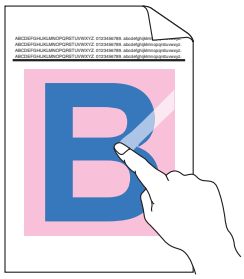 | ■ Make sure that the media type settings in the printer driver and in the machine's Paper Type menu matches the type of paper you are using. (See *Acceptable paper and other print media* on page 18 and *Basic tab* in the *Software User's Guide* on the CD-ROM.)<br>■ Make sure that two gray levers inside the back cover are in the up position.<br>■ Choose **Improve Toner Fixing** mode in the printer driver. (See *Other Print Options* (For Windows® printer driver), *Advanced options* (For Windows® BR-Script printer driver), *Print Settings* (For Macintosh printer driver) or *Printer Features* (For Macintosh BR-Script printer driver) in the *Software User's Guide* on the CD-ROM.)<br>If this selection does not provide enough improvement, select **Thicker paper** in **Media Type** settings. |

| Examples of poor print quality | Recommendation |
|---|---|
| Curled or wavy 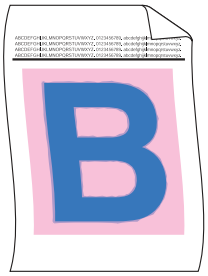 | ■ Choose **Reduce Paper Curl** mode in the printer driver when you do not use our recommended paper. (See *Other Print Options* (For Windows® printer driver), *Advanced options* (For Windows® BR-Script printer driver), *Print Settings* (For Macintosh printer driver) or *Printer Features* (For Macintosh BR-Script printer driver) in the *Software User's Guide* on the CD-ROM.)<br>■ If you do not use the machine often, the paper may have been in the paper tray too long. Turn over the stack of paper in the paper tray. Also, fan the paper stack and then rotate the paper 180° in the paper tray.<br>■ Store the paper where it will not be exposed to avoid high temperatures and high humidity. |
| Uneven density or faded 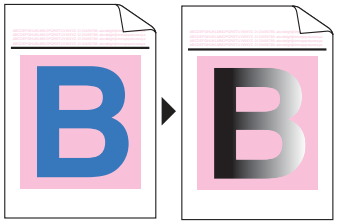 | ■ Fully open the top cover and then close it again. |
| Envelope creases | Make sure that the envelope lever is pulled down when you are printing envelopes. 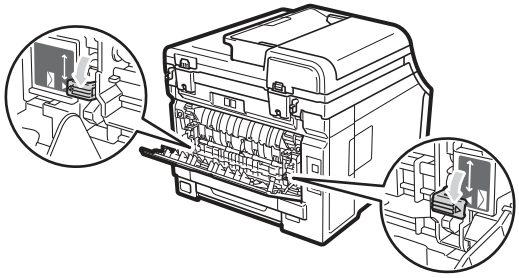 |

## Setting Dial Tone detection

Setting the Dial Tone to `Detection` will shorten the Dial Tone detect pause.

1. (USA) Press **Menu**, **0**, **4**.
   (Canada) Press **Menu**, **0**, **5**.

   ```
   Initial Setup
   4.Dial Tone
   ```

2. Press ▲ or ▼ to choose `Detection` or `No Detection`.
   Press **OK**.

3. Press **Stop/Exit**.

## Telephone line interference/ VoIP

If you are having difficulty sending or receiving a fax due to possible interference on the telephone line, we recommend that you adjust the Equalization for compatibility to reduce the modem speed for fax operations.

1. Press **Menu**, **2**, **0**, **1**.

   ```
   Miscellaneous
   1.Compatibility
   ```

2. Press ▲ or ▼ to choose `Basic(for VoIP)`, `Normal` or `High`.

   - `Basic(for VoIP)` cuts the modem speed to 9600 bps and turns the error correction mode (ECM) off.

     For a standard telephone line: If you regularly experience interference on your standard telephone line try this setting.

     If you are using VoIP: VoIP service providers offer fax support using various standards. If you regularly experience fax transmission errors try this setting.

   - `Normal` sets the modem speed at 14400 bps.

   - `High` sets the modem speed at 33600 bps.

   Press **OK**.

3. Press **Stop/Exit**.

**Note**

When you change the Compatibility to `Basic(for VoIP)`, the ECM feature is only available for color fax sending.

# Error and maintenance messages

As with any sophisticated office product, errors may occur and consumable items may need to be replaced. If this happens, your machine identifies the error or required routine maintenance and shows the appropriate message. The most common error and maintenance messages are shown below.

You can correct most errors and perform routine maintenance by yourself. If you need more help, the Brother Solutions Center offers the latest FAQs and troubleshooting tips:

Visit us at http://solutions.brother.com/

| Error Message | Cause | Action |
|---|---|---|
| `Access Error`<br>(MFC-9325CW only) | The device is removed from the USB direct interface while the data is processing. | Press **Stop/Exit**. Reinsert the device and try to print with Direct Print. |
| `Belt End Soon` | The belt unit is near the end of its life. | Buy a new belt unit before you get a `Replace Belt` message. |
| `Calibrate` | Calibration failed. | Press **Black Start** or **Color Start** and try it again.<br>■ Turn off the machine. Wait a few seconds, then turn it on again.<br>■ Identify the color causing the problem and put in a new drum unit. (See *Replacing the drum units* on page 177.) To identify the color of the drum unit, visit us at http://solutions.brother.com/ to view our FAQs and troubleshooting tips.<br>■ Put in a new belt unit. (See *Replacing the belt unit* on page 181.)<br>■ Put in a waste toner box. (See *Replacing the waste toner box* on page 185.)<br>■ If the problem continues, call your dealer or Brother Customer Service. |
| `Cartridge Error`<br>`Put the Black (K)`<br>`Toner Cartridge`<br>`back in.` [1]<br>[1] The toner cartridge color with the problem is shown in the message. | The toner cartridge is not installed properly. | Take out the drum unit and toner cartridge assembly for the toner color that is indicated on the LCD. Remove the toner cartridge and then re-install it in the drum. Put the drum unit and toner cartridge assembly back into the machine again. |

| Error Message | Cause | Action |
|---|---|---|
| Cooling Down<br>Wait for a while | The temperature of the drum unit or toner cartridge is too hot. The machine will pause its current print job and go into cooling down mode. During the cooling down mode, you will hear the cooling fan running while the LCD shows Cooling Down, and Wait for a while. | Make sure that you can hear the fan in the machine spinning and that the exhaust outlet is not blocked by something.<br>If the fan is spinning, remove any obstacles that surround the exhaust outlet, and then leave the machine turned on but do not use it for several minutes.<br>If the fan is not spinning do the following:<br>Disconnect the machine from the power for several minutes, then reconnect it. (The machine can be turned off for approximately 4 days without losing faxes stored in the memory. See *Transferring your faxes or Fax Journal report* on page 150.) |
| Comm.Error | Poor telephone line quality caused a communication error. | Send the fax again or connect the machine to another telephone line. If the problem continues, call the telephone company and ask them to check your telephone line. |
| Connection Fail | You tried to poll a fax machine that is not in Polled Waiting mode. | Check the other fax machine's polling setup. |
| Cover is Open | The ADF cover is not closed completely. | Close the ADF cover of the machine, then press **Stop/Exit**. |
| | The top cover is not closed completely. | Close the top cover of the machine. |
| Cover is Open | The fuser cover is not closed completely or paper was jammed in the back of the machine when you turned on the power. | ■ Close the fuser cover of the machine.<br>■ Make sure paper is not jammed inside the back of the machine, and then close the fuser cover and press **Black Start** or **Color Start**. |
| DIMM Error | The DIMM is not installed correctly. Or the DIMM is broken. | Turn off the machine. Re-install the DIMM correctly. Wait a few seconds, and then turn it on again. If this error message appears again, replace the DIMM with a new one. (See *Installing extra memory* on page 126.) |
| Disconnected | The other person or other person's fax machine stopped the call. | Try to send or receive again. |
| Document Jam | The document was not inserted or fed properly, or the document scanned from the ADF was too long. | See *Document jams* on page 151 or *Using the automatic document feeder (ADF)* on page 23. |
| DR Mode in Use | The machine is set to Distinctive Ring mode. You cannot change the Receive Mode from Manual to another mode. | Set Distinctive Ring to Off. (See *Turning off distinctive ring* on page 56.) |

| Error Message | Cause | Action |
|---|---|---|
| Drum Error | The corona wire on the drum unit needs to be cleaned. | Clean the corona wire on the drum unit. (See *Cleaning the corona wires* on page 160.) |
| | It is time to replace the drum units. | Replace the drum unit with a new one for the color that is indicated on the LCD. (See *Replacing the drum units* on page 177.) |
| Drums End Soon | The drum unit is near the end of its life. | Buy new drum units before you get a Replace Drums message. |
| Drum End Soon(X) [1] | The drum unit for the color indicated on the LCD is near the end of its life. | Buy new drum unit for the color indicated on the LCD before you get a Replace Drum(X) [1] message. |
| Fuser Error | The temperature of fuser unit does not rise at a specified temperature within specified time. | Turn the power switch off, wait a few seconds, and then turn it on again. Leave the machine for 15 minutes with the power on. The machine can be turned off for approximately 60 hours without losing faxes stored in the memory. (See *Transferring your faxes or Fax Journal report* on page 150.) |
| | The fuser unit is too hot. | |
| Init Unable XX | The machine has a mechanical problem. | ■ Disconnect the machine from the power for several minutes, then reconnect it. (The machine can be turned off for approximately 60 hours without losing faxes stored in the memory. See *Transferring your faxes or Fax Journal report* on page 150.)<br>■ If the problem continues, call Brother Customer Service. |
| Jam Inside | The paper is jammed inside the machine. | (See *Paper jams* on page 152.) |
| Jam Rear | The paper is jammed in the back of the machine. | (See *Paper jams* on page 152.) |
| Jam Tray | The paper is jammed in the paper tray of the machine. | (See *Paper jams* on page 152.) |
| No Belt Unit | The belt unit is not installed properly. | Re-install the belt unit. (See *Replacing the belt unit* on page 181.) |
| No Paper | The machine is out of paper or paper is not properly loaded in the paper tray. | Do one of the following:<br>■ Refill the paper in the paper tray and press **Black Start** or **Color Start** or put the paper in the manual feed slot.<br>■ Remove the paper and load it again. Then press **Black Start** or **Color Start**.<br>■ If the problem is not solved, the paper pick-up roller may be stained. Clean the paper pickup roller. (See *Cleaning the paper pick-up rollers* on page 166.) |

| Error Message | Cause | Action |
|---|---|---|
| No Response/Busy | The number you dialed does not answer or is busy. | Verify the number and try again. |
| No Toner | The toner cartridge or the drum unit and toner cartridge assembly is not installed properly. | Re-install the toner cartridge or the drum unit that is indicated on the LCD. |
| No Waste Toner | The waste toner box is not installed properly. | Re-install the waste toner box. (See *Replacing the waste toner box* on page 185.) |
| Out of Memory | The machine's memory is full. | **Fax sending or copy operation in progress**<br>Do one of the following:<br>■ Press **Black Start** or **Color Start** to send or copy the scanned pages.<br>■ Press **Stop/Exit** and wait until the other operations in progress finish, and then try again.<br>■ Clear the data from the memory. (See *Out of memory message* on page 45 or page 92.)<br>**Print operation in process**<br>Do one of the following:<br>■ Reduce print resolution. (See *Advanced tab* in the *Software User's Guide* on the CD-ROM.)<br>■ Clear the faxes from the memory. (See *Out of memory message* on page 92.) |
| Print Unable XX | The machine has a mechanical problem. | Do one of the following:<br>■ Disconnect the machine from the power for several minutes, then reconnect it. (The machine can be turned off for approximately 60 hours without losing faxes stored in the memory. See *Transferring your faxes or Fax Journal report* on page 150.)<br>■ If the problem continues, call Brother Customer Service. |
| Print Unable 1A | One of the issues that can cause this error is that condensation may form inside the machine after a room temperature change. | Turn the power switch off and fully open the top cover. Leave the machine off and open for 30 minutes to remove any condensation from inside the machine, then close the top cover and turn it on again. If this does not clear the error, call Brother Customer Service. |
| Protected Device<br>(MFC-9325CW only) | The protect switch of the USB Flash memory drive is on. | Turn off the protect switch of the USB Flash memory drive. |

| Error Message | Cause | Action |
|---|---|---|
| Registration | Registration failed. | Press **Black Start** or **Color Start** and try again.<br>Do one of the following:<br>■ Turn off the machine's power switch. Wait a few seconds, then turn it on again.<br>■ Try Manual Registration, **Menu**, **4**, **7**. (See *Manual Registration* on page 168.)<br>■ Put in a new belt unit. (See *Replacing the belt unit* on page 181.)<br>■ If the problem continues, call Brother Customer Service. |
| Rename the File<br>(MFC-9325CW only) | There is already a file on the USB Flash memory drive with the same name as the file you are trying to save. | Change the file name of the file on the USB Flash memory drive or the file you are trying to save. |
| Replace Belt | It is time to replace the belt unit. | Replace the belt unit. (See *Replacing the belt unit* on page 181.) |
| Replace Drums | It is time to replace the drum units. | Replace the drum units.<br>(See *Replacing the drum units* on page 177.) |
| | The drum unit counter was not reset when a new drum was installed. | Reset the drum unit counter.<br>(See *Resetting the drum counter* on page 181.) |
| Replace Drum(X) [1] | It is time to replace the drum unit for the indicated color. | Replace the drum unit for the color indicated on the LCD.<br>(See *Replacing the drum units* on page 177.) |
| Replace Fuser | It is time to replace the fuser unit. | Call Brother Customer Service or a Brother Authorized Service Center to replace the fuser unit.<br>To replace Fuser Unit call Brother Customer Service at:<br>1-877-BROTHER (1-877-276-8437) (in USA)<br>1-877-BROTHER (in Canada)<br>or to locate a Brother Authorized Service Center, visit us at:<br>http://www.brother-usa.com/service/ |
| Replace PF Kit | It is time to replace the paper feeding kit. | Call Brother Customer Service or a Brother Authorized Service Center to replace the PF Kit.<br>To replace PF Kit call Brother Customer Service at:<br>1-877-BROTHER (1-877-276-8437) (in USA)<br>1-877-BROTHER (in Canada)<br>or to locate a Brother Authorized Service Center, visit us at:<br>http://www.brother-usa.com/service/ |

| Error Message | Cause | Action |
|---|---|---|
| Replace Toner | The toner cartridge is at the end of its life. | Replace the toner cartridge for the color indicated on the LCD. (See *Replacing a Toner cartridge* on page 171.) |
| Replace WT Box | It is time to replace the waste toner box. | Replace the waste toner box. (See *Replacing the waste toner box* on page 185.) |
| Scan Unable XX | The machine has a mechanical problem. | ■ Disconnect the machine from the power for several minutes, then reconnect it. (The machine can be turned off for approximately 60 hours without losing faxes stored in the memory. See *Transferring your faxes or Fax Journal report* on page 150.)<br>■ If the problem continues, call Brother Customer Service. |
| Short paper | The paper size detected is shorter than the paper size defined in the print job and the paper size being used requires the back cover to be open. | Open the back cover (back output tray) and remove any printed pages. Leave the back cover open and press **Black Start** or **Color Start**. |
| Size mismatch | The paper in the tray is not the correct size. | Load the correct size of paper in the tray and set the “Paper Size” (**Menu**, **1**, **2**, **2** (See *Paper Size* on page 25)). |
| Small paper | The paper size defined in the printer driver requires the back cover to be open. | Open the back cover (back output tray) and press **Black Start** or **Color Start**. (See *Printing on thick paper, labels, envelopes or small paper* on page 14.) |
| Toner Low | The toner cartridge is near the end of its life. | Buy a new toner cartridge for the color that is indicated on the LCD before you get a Replace Toner message. |
| Too Many Files<br>(MFC-9325CW only) | There are too many files stored on the USB Flash memory drive. | Reduce the number of files stored on the USB Flash memory drive. |
| Unusable Device<br>(MFC-9325CW only) | An incompatible or broken device has been connected to the USB direct interface. | Remove the USB Flash memory drive from the USB direct interface. |
| WT Box End Soon | The waste toner box is almost full. | Buy a new waste toner box before you get a Replace WT Box message. |

[1] (X) shows the toner cartridge or drum unit color that is near the end of its life. (K)=Black, (Y)=Yellow, (M)=Magenta, (C)=Cyan.

## Transferring your faxes or Fax Journal report

If the LCD shows:

- `Init Unable XX`
- `Print Unable XX`
- `Scan Unable XX`

We recommend transferring your faxes to another fax machine or to your PC. (See *Transferring faxes to another fax machine* on page 150 or *Transferring faxes to your PC* on page 150.)

You can also transfer the Fax Journal report to see if there are any faxes you need to transfer. (See *Transferring Fax Journal report to another fax machine* on page 150.)

**Note**

If there is an error message on the machine's LCD, after the faxes have been transferred, disconnect the machine from the power source for several minutes, and then reconnect it.

### Transferring faxes to another fax machine

If you have not set up your Station ID, you cannot enter fax transfer mode. (See *Set your station ID* in the *Quick Setup Guide*.)

1. Press **Menu**, **9**, **0**, **1**.
2. Do one of the following:
   - If the LCD shows `No Data`, there are no faxes left in the machine's memory. Press **Stop/Exit**.
   - Enter the fax number to which faxes will be forwarded.
3. Press **Black Start** or **Color Start**.

### Transferring faxes to your PC

You can transfer the faxes from your machine's memory to your PC.

1. Make sure that you have installed **MFL-Pro Suite** on your PC, and then turn on **PC-Fax Receiving** on the PC. (For details about PC Fax Receive, see *PC-FAX receiving* in the *Software User's Guide* on the CD-ROM.)
2. Make sure that you have set `PC Fax Receive` on the machine. (See *PC Fax Receive* on page 74.) If faxes are in the machine's memory when you set up PC Fax Receive, the LCD will ask if you want to transfer the faxes to your PC.
3. Do one of the following:
   - To transfer all faxes to your PC, press **1**. You will be asked if you want a backup print.
   - To exit and leave the faxes in the memory, press **2**.
4. Press **Stop/Exit**.

### Transferring Fax Journal report to another fax machine

If you have not set up your Station ID, you cannot enter fax transfer mode. (See *Set your station ID* in the *Quick Setup Guide*.)

1. Press **Menu**, **9**, **0**, **2**.
2. Enter the fax number to which the Fax Journal report will be forwarded.
3. Press **Start**.

## Document jams

If the document is jammed, follow the steps below.

**IMPORTANT**

After removing a jammed document, check that no paper scraps are left in the machine that could cause another jam.

### Document is jammed in the top of the ADF unit

1. Take out any paper from the ADF that is not jammed.
2. Open the ADF cover.
3. Pull the jammed document out to the left.

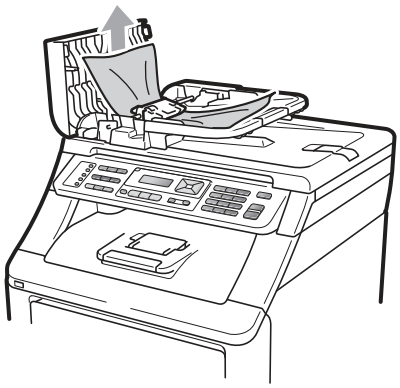

4. Close the ADF cover.
5. Press **Stop/Exit**.

### Document is jammed under the document cover

1. Take out any paper from the ADF that is not jammed.
2. Lift the document cover.
3. Pull the jammed document out to the right.

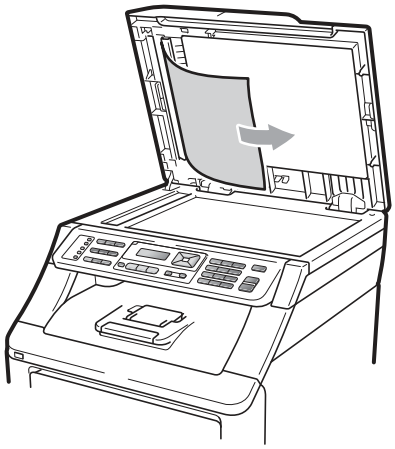

4. Close the document cover.
5. Press **Stop/Exit**.

### Document is jammed at the output tray

1. Take out any paper from the ADF that is not jammed.
2. Pull the jammed document out to the right.

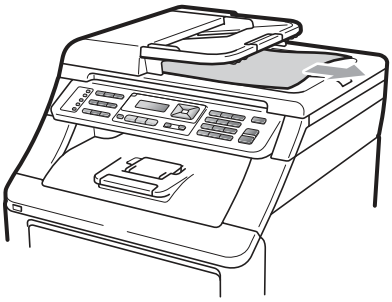

3. Press **Stop/Exit**.

## Paper jams

To clear paper jams, please follow the steps in this section.

**IMPORTANT**

Please confirm that you have installed all toner cartridges and drum units in the machine. Failure to install these items or improper installation may cause a paper jam in your Brother machine.

**Note**

If the error message remains, open and close the top cover and fuser cover firmly to reset the machine.

**Note**

The LCD names for the paper trays are as follows:

- Standard paper tray: `Tray`
- Manual Feed Slot: `Manual Feed`

### Paper is jammed in the Paper Tray

If the LCD shows `Jam Tray`, follow these steps:

1. Pull the paper tray completely out of the machine.

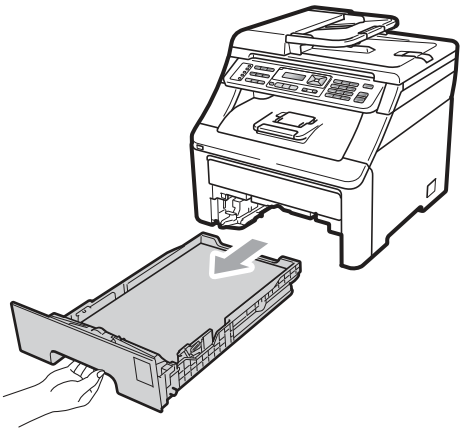

2. Use both hands to slowly pull out the jammed paper.

**IMPORTANT**

If the paper cannot easily be removed in this direction, stop and follow the instructions for *Paper is jammed inside the machine* on page 155.

**Note**

Pulling out the jammed paper downwards allows you to remove the paper easier.

3. Make sure the paper is below the maximum paper mark (▼) of the paper tray. While pressing the green paper-guide release lever, slide the paper guides to fit the paper size. Make sure that the guides are firmly in the slots. (See *Loading paper in the standard paper tray* on page 11.)

4. Put the paper tray firmly back in the machine.

5. Press **Black Start** or **Color Start** to resume printing.

### Paper is jammed at the output paper tray

When the paper is jammed at the output paper tray, follow these steps:

1. Open the scanner using both hands.

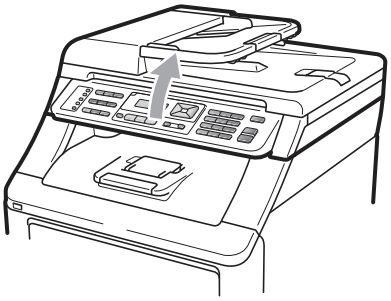

**Note**

When the top cover is open, you cannot open the scanner.

2. Press down the green lever and remove the paper.

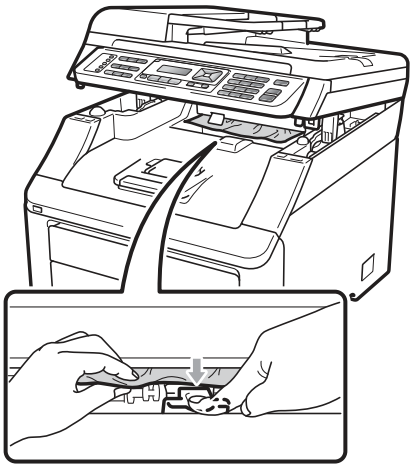

3. Push the scanner down with both hands to close it.

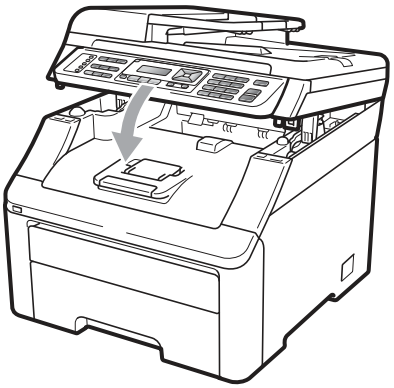

C

## Paper is jammed at the back of the machine

If the LCD shows `Jam Rear`, a paper jam occurred behind the face-up output tray. Follow these steps:

1. Turn off the machine's power switch. Unplug the telephone line cord first, disconnect all cables, and then unplug the power cord from the AC power outlet.

2. Open the back cover.

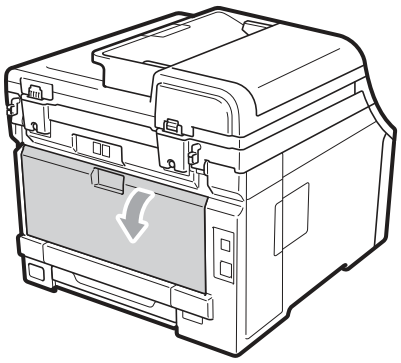

**CAUTION**

**HOT SURFACE**

After you have just used the machine, some internal parts of the machine will be extremely hot. Wait at least 10 minutes for the machine to cool down before continuing to the next step.

3. Push down and pull the green tabs at the left and right hand sides toward you and fold down the fuser cover (1).

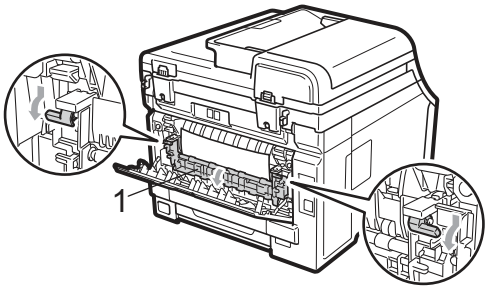


4. Using both hands, gently pull the jammed paper out of the fuser unit.

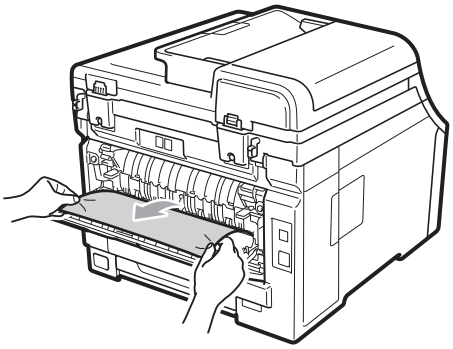

5. Close the fuser cover (1).

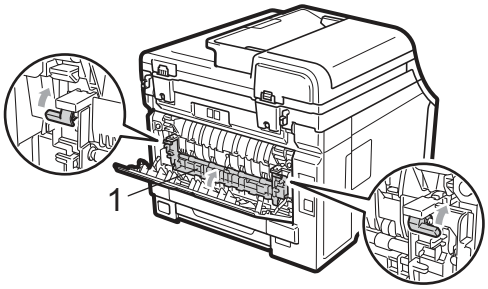


6. Fully close the back cover.

7. Plug the machine's power cord back into the AC power outlet first, and reconnect all cables and telephone line cord. Turn on the machine's power switch.

### Paper is jammed inside the machine

If the LCD shows `Jam Inside`, follow these steps:

1. Turn off the machine's power switch. Unplug the telephone line cord first, disconnect all cables, and then unplug the power cord from the AC power outlet. Leave the machine turned off for 10 minutes to cool down.

2. Fully open the top cover by lifting up on the handle (1).

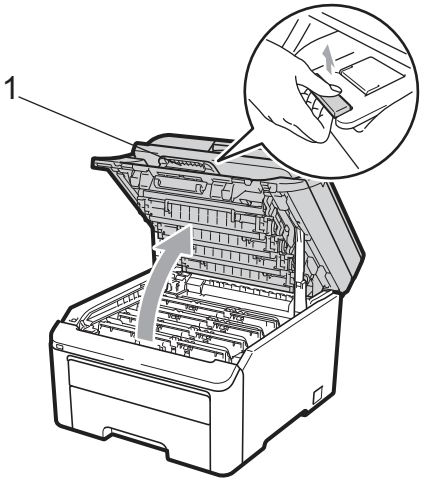


**CAUTION**

**HOT SURFACE**

After you have just used the machine, some internal parts of the machine will be extremely hot. Wait at least 10 minutes for the machine to cool down before continuing to the next step.

**IMPORTANT**

When the scanner is open, you cannot open the top cover.

3. Take out all the drum unit and toner cartridge assemblies. Repeat this for all the drum unit and toner cartridge assemblies.

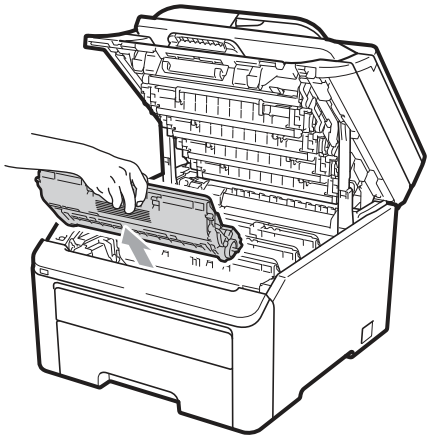

**IMPORTANT**

- We recommend that you place the drum unit and toner cartridge assemblies on a clean, flat surface with a sheet of disposable paper or cloth underneath it in case you accidentally spill or scatter toner.
- To prevent damage to the machine from static electricity, DO NOT touch the electrodes shown in the illustration.

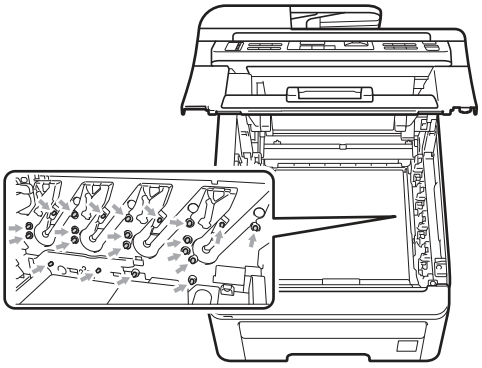

- Handle the toner cartridge carefully. If toner scatters on your hands or clothes, wipe or wash it off with cold water at once.

- To avoid print quality problems, DO NOT touch the shaded parts shown in the illustrations.

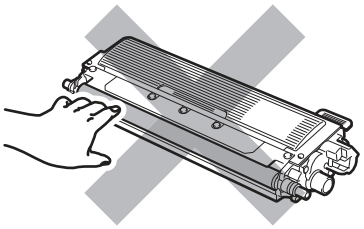

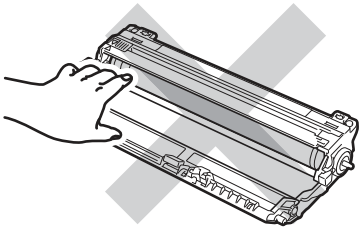

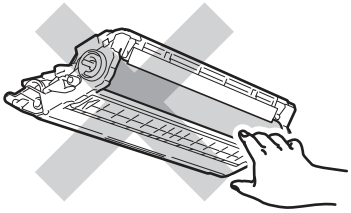

4 Pull out the jammed paper slowly.

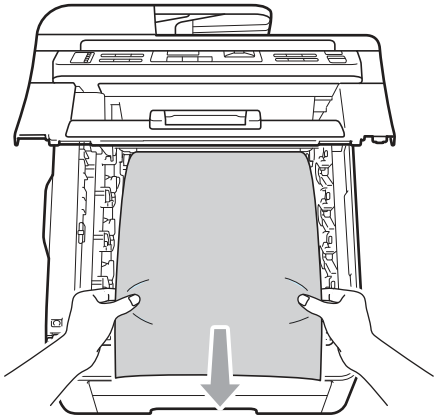

5 Slide each drum unit and toner cartridge assembly into the machine. Make sure that you match the toner cartridge color to the same color label on the machine. Repeat this for all the drum unit and toner cartridge assemblies.

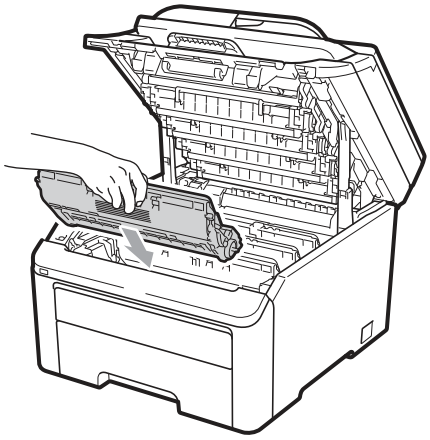

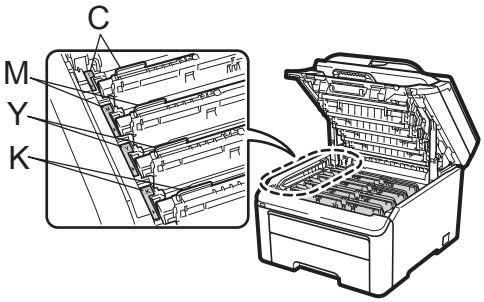


C-Cyan M-Magenta Y-Yellow K-Black

6 Close the top cover.

7 Plug the machine's power cord back into the AC power outlet first, and reconnect all cables and telephone line cord. Turn on the machine's power switch.

# Routine maintenance

Clean the outside and inside of the machine regularly with a dry, lint-free cloth. When you replace the toner cartridge or the drum unit, make sure that you clean the inside of the machine. If printed pages are stained with toner, clean the inside of the machine with a dry, lint-free cloth.

**WARNING**

Use neutral detergents. Cleaning with volatile liquids such as thinner or benzine will damage the surface of the machine.

DO NOT use cleaning materials that contain ammonia, alcohol, any type of spray, or any type of flammable substance to clean the outside or inside of the machine. Doing this may cause a fire or electrical shock. (For more information see *Important safety instructions* on page 117.)

Be careful not to inhale toner.

## Cleaning the outside of the machine

1. Turn off the machine's power switch. Unplug the telephone line cord first, disconnect all cables, and then unplug the power cord from the AC power outlet.

2. Pull the paper tray completely out of the machine.

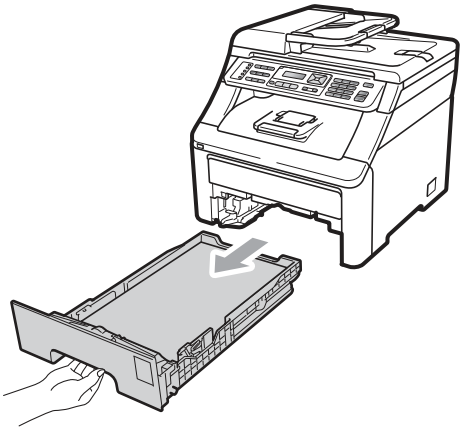

3. Wipe the outside of the machine with a dry, lint-free soft cloth to remove dust.

4. Remove any paper that is in the paper tray.

C

5 Wipe the inside and the outside of the paper tray with a dry, lint-free soft cloth to remove dust.

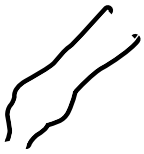

6 Re-load the paper and put the paper tray firmly back in the machine.

7 Plug the machine's power cord back into the AC power outlet first, and reconnect all cables and telephone line cord. Turn on the machine's power switch.

## Cleaning the scanner

1 Turn off the machine's power switch. Unplug the telephone line cord first, disconnect all cables and then unplug the power cord from the AC power outlet.

2 Lift the document cover (1).
Clean the white plastic surface (2) and scanner glass (3) underneath it with a soft lint-free cloth moistened with water.

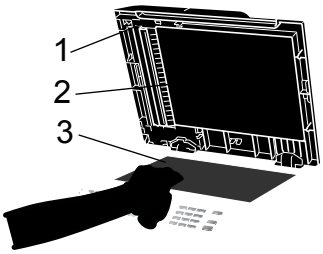


3 In the ADF unit, clean the white bar (1) and the glass strip (2) underneath it with a soft lint-free cloth moistened with water.

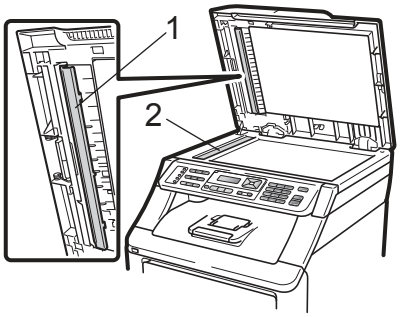


4 Plug the machine's power cord back into the AC power outlet first, and reconnect all cables and telephone line cord. Turn on the machine's power switch.

**Note**

In addition to cleaning the scanner glass and glass strip with a soft lint-free cloth moistened with water, run your finger tip over the glass to see if you can feel anything on it. If you feel dirt or debris, clean the glass again concentrating on that area. You may need to repeat the cleaning process three or four times. To test, make a copy after each cleaning.

## Cleaning the LED heads

**WARNING**

DO NOT use cleaning materials that contain ammonia, alcohol, any type of spray, or any type of flammable substance to clean the inside or outside of the machine. Doing this may cause a fire or electrical shock. Use neutral detergents.

**IMPORTANT**

DO NOT touch the windows of the LED heads with your fingers.

1. Before you clean the inside of the machine, turn off the machine's power switch. Unplug the telephone line cord first, and then unplug the power cord from the AC power outlet.
2. Fully open the top cover by lifting up on the handle (1).

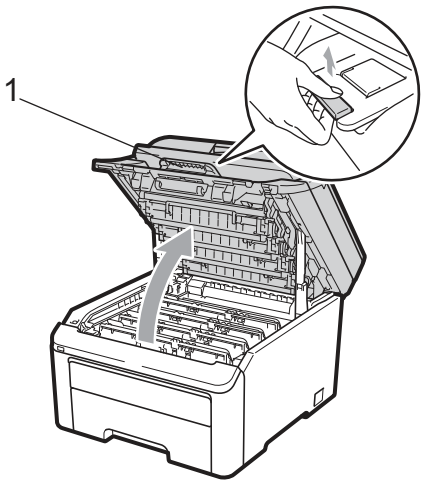


**IMPORTANT**

When the scanner is open, you cannot open the top cover.

3. Wipe the windows of the LED heads (1) with a dry, lint-free cloth. Be careful not to touch the windows of the LED heads (1) with your fingers.

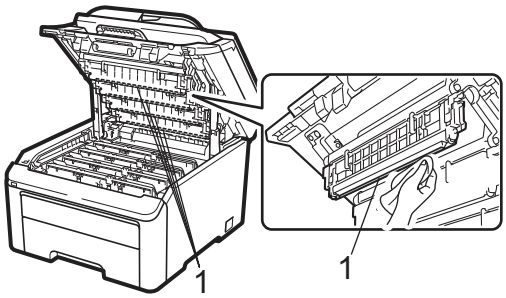


4. Close the top cover of the machine.
5. Plug the machine's power cord back into the AC power outlet first, and then plug in the telephone line cord.Turn on the machine's power switch.

## Cleaning the corona wires

If you have print quality problems, clean the corona wires as follows:

1. Turn off the machine's power switch. Unplug the telephone line cord first, disconnect all cables, and then unplug the power cord from the AC power outlet.

2. Fully open the top cover by lifting up on the handle (1).

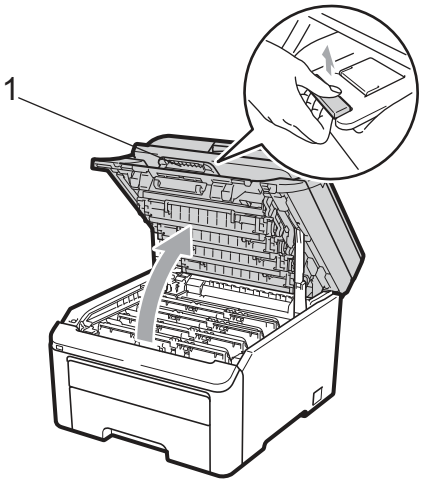


**IMPORTANT**

When the scanner is open, you cannot open the top cover.

3. Take out the drum unit and toner cartridge assemblies.

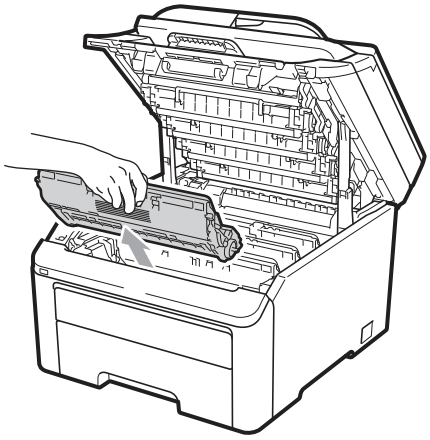

**IMPORTANT**

- We recommend that you place the drum unit and toner cartridge assembly on a clean, flat surface with a sheet of disposable paper or cloth underneath it in case you accidentally spill or scatter toner.
- To prevent damage to the machine from static electricity, DO NOT touch the electrodes shown in the illustration.

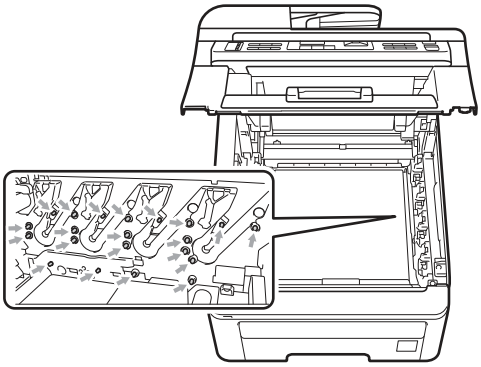

4 Clean the primary corona wire inside the drum unit by gently sliding the green tab from left to right and right to left several times.

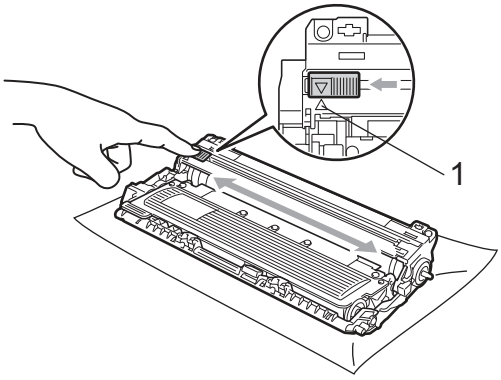


**Note**

Be sure to return the tab to the home position (▲) (1). If you do not, printed pages may have a vertical stripe.

5 Slide each drum unit and toner cartridge assembly into the machine. Make sure that you match the toner cartridge color to the same color label on the machine.

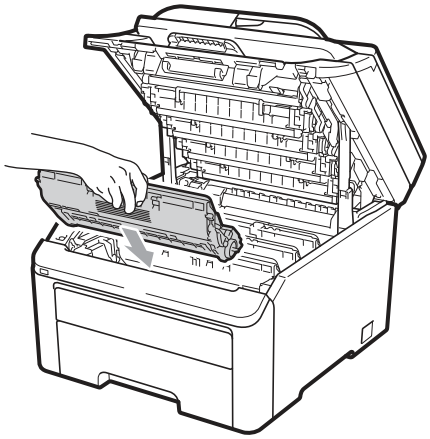

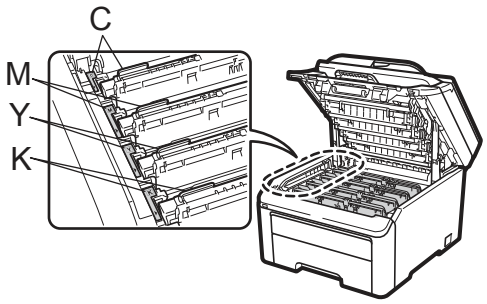


C-Cyan M-Magenta Y-Yellow K-Black

6 Repeat steps ❸ to ❺ to clean the remaining corona wires.

7 Close the top cover of the machine.

8 Plug the machine's power cord back into the AC power outlet first, and then reconnect all cables and telephone line cord. Turn on the machine's power switch.

## Cleaning the drum unit

### Small spots on the printed pages

If your printout has any small white or colored spots, follow the steps below to solve the problem.

1. Open the manual feed slot cover.

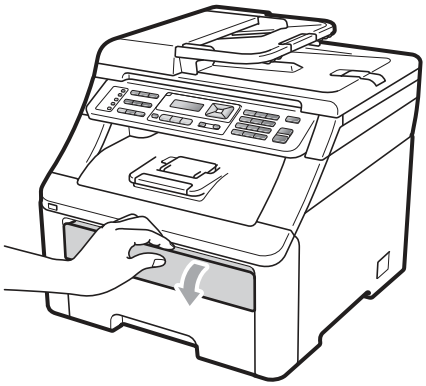

2. Using both hands, slide the manual feed slot paper guides to the width of the paper that you are going to use.

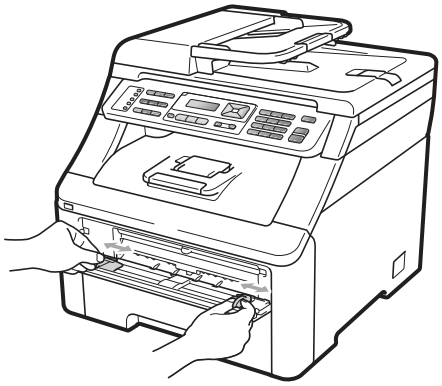

3. Using both hands, put one blank sheet of paper in the manual feed slot until the front edge of the paper touches the paper feed roller. Wait until the machine automatically feeds the paper. When you feel the machine pull in the paper, let go.

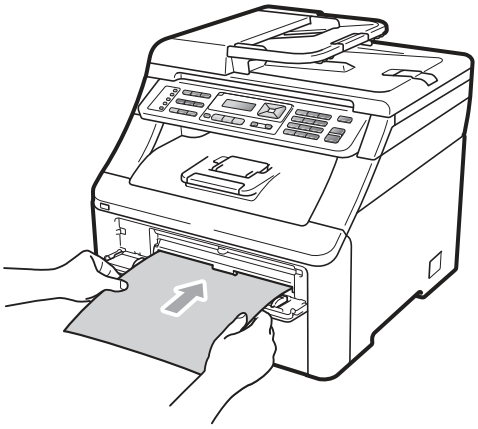

**Note**

- Make sure that the paper is straight and in the correct position on the manual feed slot. If it is not, the paper may not be fed properly, resulting in a paper jam.
- Do not put more than one piece of paper in the manual feed slot at any one time, as it may cause a jam.
- If you put paper in the manual feed slot before the machine is in the Ready mode, an error may occur and the machine will stop printing.

4. Make sure that the machine is in the Ready mode.
   Press **Menu**, **4**, **8**.

```
Drum Cleaning
Press Start
```

5 Press **Black Start** or **Color Start**. The machine will pull in the piece of paper and start cleaning the drum unit.

```
Drum Cleaning
Please Wait
```

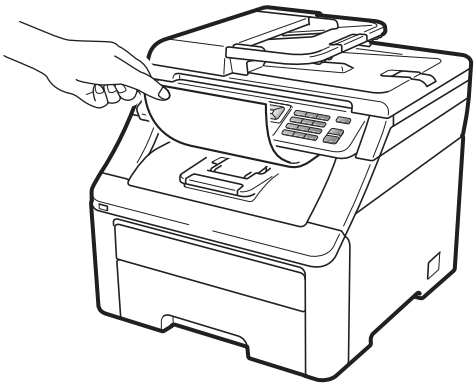

6 When the machine has finished cleaning, `Completed` appears on the LCD. Press **Stop/Exit** so that the machine returns to the Ready mode.

7 Repeat steps ❸ to ❻ two more times using a new blank sheet of paper each time. Upon completion please discard the used paper. If the print problem is not resolved please contact Brother Customer Service.

## Large spots on the printed pages

If your printout has colored spots at 3.7 in. (94 mm) intervals, follow the steps below to solve the problem.

1 Turn off the machine's power switch. Unplug the telephone line cord first, disconnect all cables, and then unplug the power cord from the AC power outlet.

2 Fully open the top cover by lifting up on the handle (1).

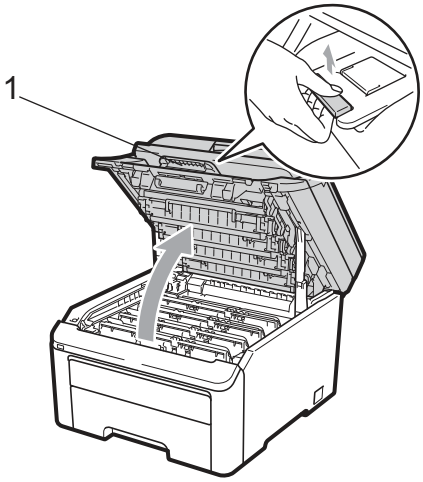


**IMPORTANT**

When the scanner is open, you cannot open the top cover.

C

3 See the print sample to identify the color causing the problem. The color of the spots is the color of the drum you should clean. For example, if the spots are cyan, you should clean the drum for cyan. Take out the drum unit and toner cartridge assembly of the color causing the problem.

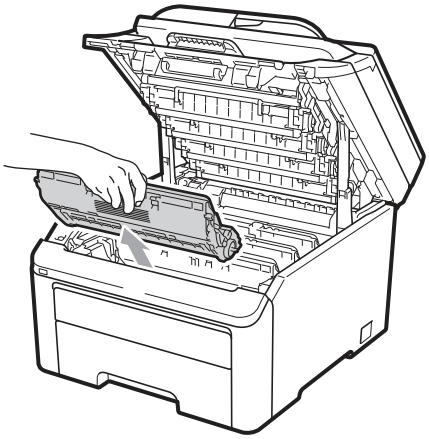

**IMPORTANT**

- We recommend that you place the drum unit and toner cartridge assembly on a clean, flat surface with a sheet of disposable paper or cloth underneath it in case you accidentally spill or scatter toner.
- To prevent damage to the machine from static electricity, DO NOT touch the electrodes shown in the illustration.

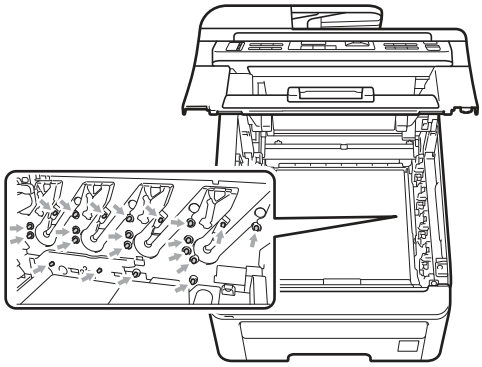

4 Push down the green-labeled lock lever (1) and take the toner cartridge out of the drum unit.

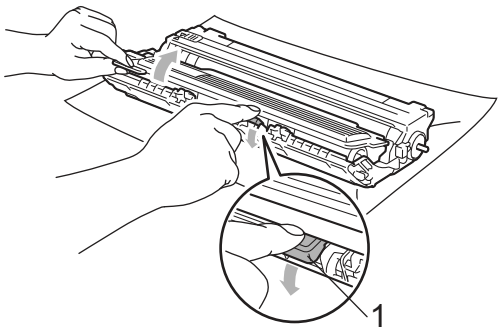


**IMPORTANT**

Handle the toner cartridge carefully. If toner scatters on your hands or clothes, wipe or wash it off with cold water at once.

5 Put the print sample in front of the drum unit, and find the exact position of the poor print.

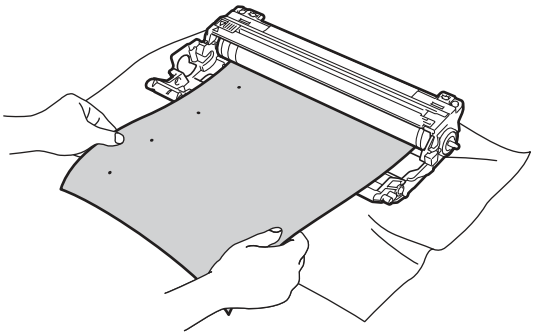

6 Turn the drum unit gear by hand while looking at the surface of the OPC drum (1).

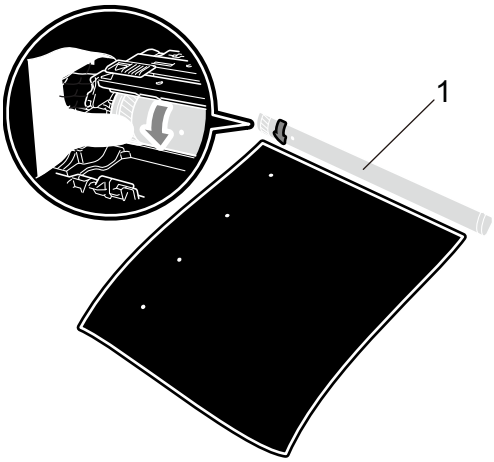


7 When you have found the mark on the drum that matches the print sample, wipe the surface of the OPC drum with a dry cotton swab until the dust or glue on the surface comes off.

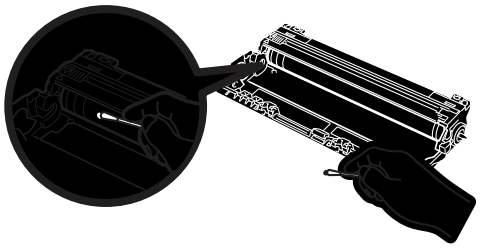

**IMPORTANT**

DO NOT clean the surface of the photosensitive drum with a sharp object.

8 Put the toner cartridge back firmly into the drum unit until you hear it lock into place.

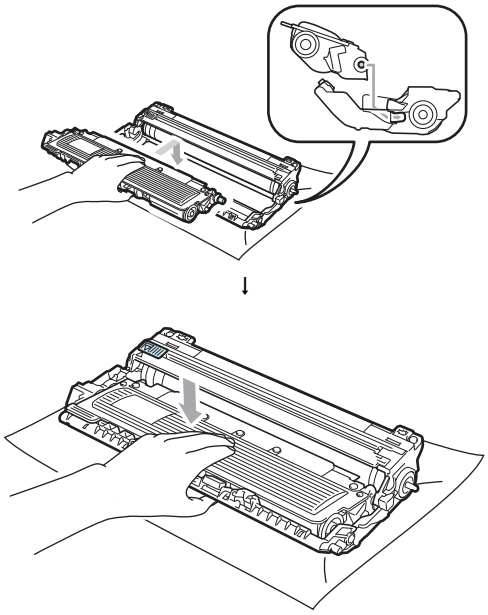

**Note**

Make sure that you put in the toner cartridge properly or it may separate from the drum unit.

C

9 Slide each drum unit and toner cartridge assembly into the machine. Make sure that you match the toner cartridge color to the same color label on the machine.

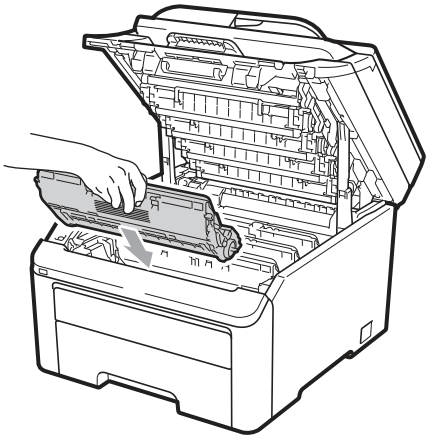

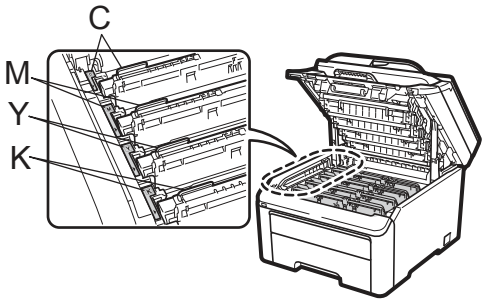


C-Cyan M-Magenta Y-Yellow K-Black

10 Close the top cover of the machine.

11 Plug the machine's power cord back into the AC power outlet first, and then reconnect all cables and telephone line cord. Turn on the machine's power switch.

## Cleaning the paper pick-up rollers

If you have paper feed problems, clean the pick-up rollers as follows:

1 Turn off the machine's power switch. Unplug the power cord from the AC power outlet.

2 Pull the paper tray completely out of the machine.

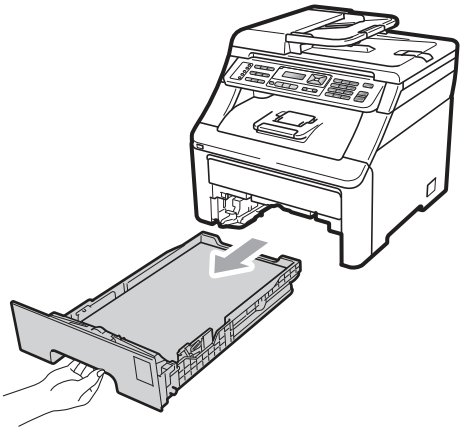

3 Tightly wring out a lint-free cloth soaked in lukewarm water, and then wipe the separator pad (1) of the paper tray with it to remove dust.

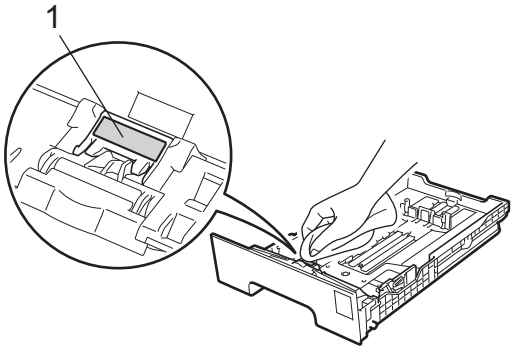

4 Wipe the two pick-up rollers (1) inside of the machine to remove dust.

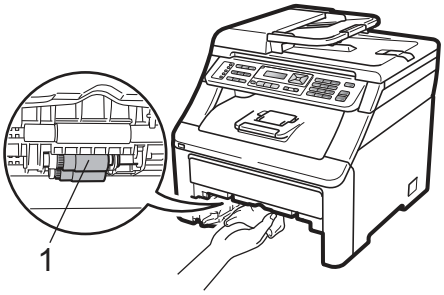


5 Put the paper tray back in the machine.

6 Plug the machine's power cord back into the AC power outlet. Turn on the machine's power switch.

## Calibration

The output density for each color may vary depending on the environment the machine is in such as temperature and humidity. Calibration helps you to improve the color density.

1 Press **Menu**, **4**, **5**.

2 Press ▲ or ▼ to select `Calibrate`.

3 Press **OK**.

4 Press **1** to select `Yes`.

5 Press **Stop/Exit**.

You can reset the calibration parameters back to those set at the factory.

1 Press **Menu**, **4**, **5**.

2 Press ▲ or ▼ to `Reset`.

3 Press **OK**.

4 Press **1** to select `Yes`.

5 Press **Stop/Exit**.

### Note

- If an error message is displayed, press **Stop/Exit** and try again. For more information, see *Error and maintenance messages* on page 144.
- If you print using Windows® printer driver, you need to perform the calibration from the Windows® printer driver. See *Advanced tab* in the *Software User's Guide* on the CD-ROM.
- If you print using the Macintosh printer driver, you need to perform the calibration using the status monitor. See *Status Monitor* in the *Software User's Guide* on the CD-ROM. When the **Status Monitor** is open, choose **Control / Color Calibration** from the menu bar.

## Auto Registration

### Registration

If solid areas of color or images have cyan, magenta or yellow fringes, you can use the auto-registration feature to correct the problem.

1. Press **Menu**, **4**, **6**, **1**.
2. To start, press **1**.
   To exit, press **2**.
3. Press **Stop/Exit**.

## Manual Registration

If color still appears incorrectly after auto-registration, you will need to perform manual registration.

1. Press **Menu**, **4**, **7**, **1**.
2. Press **Black Start** or **Color Start** to start printing the color registration chart.
3. When the machine has finished printing the registration sheet, press **2** (`Set Regist.`) to correct the color manually.
4. Starting at **1** (Magenta) on the chart, check which colored bar has the most uniform print density and enter its number into the machine using the ▲ and ▼ keys.
   Press **OK**.
   Repeat for **2** (Cyan), **3** (Yellow), **4**, **5**, **6** to **9**.
5. Press **Stop/Exit**.

## Frequency (Color Correction)

You can set how often the color correction (Color Calibration and Auto Registration) occurs. The default setting is Normal. The color correction process consumes some amount of the toner.

1. Press **Menu**, **4**, **9**.
2. Press ▲ or ▼ to choose `Normal`, `Low` or `Off`.
   Press **OK**.
3. Press **Stop/Exit**.

# Replacing the consumable items

The following messages appear on the LCD in the Ready mode. These messages provide advanced warnings to replace the consumable items before they reach the end of their life. To avoid any inconvenience, you may want to buy spare consumable items before the machine stops printing.

| LCD messages | Consumable item to replace | Approximate life | How to replace | Order No. |
|---|---|---|---|---|
| `Toner Low`<br>`Prepare New X Toner Cartridge.` | Toner cartridge<br>X = Cyan, Magenta, Yellow, Black | <Black><br>2,200 pages [1 2]<br><Cyan, Magenta, Yellow><br>1,400 pages [1 2] | See page 171. | TN-210BK, TN-210C, TN-210M, TN-210Y |
| `Drums End Soon` | 4 Drum units | 15,000 pages [1 3 4] | See page 177. | DR-210CL [5] |
| `Drum End Soon(X)` | 1 Drum unit<br>**X** = **C**, **M**, **Y**, **K**<br>**C** = Cyan<br>**M** = Magenta<br>**Y** = Yellow<br>**K** = Black | 15,000 pages [1 3 4] | See page 177. | DR-210CL-BK [6], DR-210CL-CMY [7] |
| `Belt End Soon` | Belt unit | 50,000 pages [1] | See page 181. | BU-200CL |
| `WT Box End Soon` | Waste toner box | 50,000 pages [1] | See page 185. | WT-200CL |

1 A4 or Letter size single-sided pages.

2 Approx. cartridge yield is declared in accordance with ISO/IEC 19798.

3 1 page per job.

4 Drum life is approximate and may vary by type of use.

5 Contains 4 pc. Drum Set.

6 Contains 1 pc. Black Drum Unit.

7 Contains 1 pc. Color Drum Unit.

You will need to replace certain parts and clean the machine regularly.

| LCD messages | Consumable item to replace | Approximate life | How to replace | Order No. |
|---|---|---|---|---|
| Replace Toner | Toner cartridge | <Black><br>2,200 pages [1 2]<br><Cyan, Magenta,Yellow><br>1,400 pages [1 2] | See page 171. | TN-210BK,<br>TN-210C,<br>TN-210M,<br>TN-210Y |
| Replace Drums | 4 Drum units | 15,000 pages [1 3 4] | See page 177. | DR-210CL [5] |
| Replace Drum(X) | 1 Drum unit<br>**X** = **C**, **M**, **Y**, **K**<br>**C** = Cyan<br>**M** = Magenta<br>**Y** = Yellow<br>**K** = Black | 15,000 pages [1 3 4] | See page 177. | DR-210CL-BK [6],<br>DR-210CL-CMY [7] |
| Drum Error [8] | Drum unit | 15,000 pages [1 3 4] | See page 177. | |
| Replace Belt | Belt unit | 50,000 pages [1] | See page 181. | BU-200CL |
| Replace WT Box | Waste toner box | 50,000 pages [1] | See page 185. | WT-200CL |
| Replace Fuser | Fuser unit | 50,000 pages [1] | Call your dealer or Brother Customer Service for a replacement fuser unit. | |
| Replace PF Kit | Paper feeding kit | 50,000 pages [1] | Call your dealer or Brother Customer Service for a replacement paper feeding kit 1. | |

1 A4 or Letter size single-sided pages.

2 Approx. cartridge yield is declared in accordance with ISO/IEC 19798.

3 1 page per job.

4 Drum life is approximate and may vary by type of use.

5 Contains 4 pc. Drum Set.

6 Contains 1 pc. Black Drum Unit.

7 Contains 1 pc. Color Drum Unit.

8 The Drum Error message has two cases: If the scroll message shows Replace the Drum Unit. you will need to replace the drum unit. If the scroll message shows Slide the Green tab on Drum Unit. you do not need to replace the drum unit, you just need to clean the corona wires. (See *Cleaning the corona wires* on page 160.)

**Note**

- Go to http://www.brother.com/original/index.html for instructions on how to return your used consumable items to the Brother collection program. If you choose not to return your used consumable, please discard the used consumable according to local regulations, keeping it separate from domestic waste. If you have questions, call your local waste disposal office.
- We recommend placing used consumable items on a piece of paper to prevent accidentally spilling or scattering the material inside.
- If you use paper that is not a direct equivalent for the recommended paper, the life of consumable items and machine parts may be reduced.
- The projected life of the toner cartridges is based on ISO/IEC 19798. Frequency of replacement will vary depending on the complexity of printed pages, percentage of coverage and type of media used.



## Replacing a Toner cartridge

The Standard toner cartridges can print approximately 2,200 pages (black) or approximately 1,400 pages (yellow, magenta, cyan) [1]. Actual page count will vary depending on your average type of document. The machine is supplied with a Starter toner cartridge that will need to be replaced after approximately 1,000 pages [1]. When a toner cartridge is running low, the LCD shows `Toner Low`.

[1] Approx. cartridge yield is declared in accordance with ISO/IEC 19798.

**Note**

- It is a good idea to keep a new toner cartridge ready for use when you see the `Toner Low` warning.
- To ensure high quality printing, we recommend that use only Genuine Brother Brand toner cartridges. When you want to buy toner cartridges, please call Brother Customer Service.
- We recommend that you clean the machine when you replace the toner cartridge. See *Routine maintenance* on page 157.
- If you change the print density setting for lighter or darker printing, the amount of toner used will change.
- Wait to unpack the toner cartridge until immediately before you put it into the machine.

### Toner Low message

```
Toner Low
Prepare...
```

If the LCD shows `Toner Low Prepare New X Toner Cartridge.`, the machine has nearly run out of toner. Buy a new toner cartridge and have it ready before you get a `Replace Toner` message. The LCD shows the toner color that is near the end of its life (Cyan, Magenta, Yellow or Black).

### Replace Toner message

When the following message appears on the LCD, you need to replace the toner cartridge:

```
Replace Toner
```

The scrolling message on the LCD indicates which color you need to replace.

1. Turn off the machine's power switch. Unplug the telephone line cord first, and then unplug the power cord from the AC power outlet.

2 Fully open the top cover by lifting up on the handle (1).

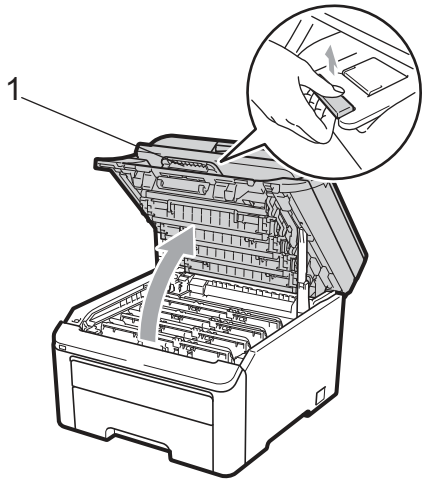


**IMPORTANT**

When the scanner is open, you cannot open the top cover.

3 Take out the drum unit and toner cartridge assembly for the color shown on the LCD.

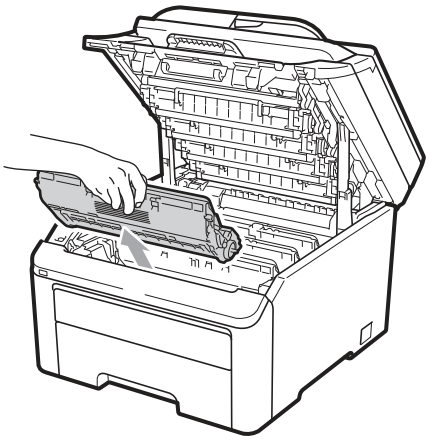

4 Push down the green-labeled lock lever (1) and take the toner cartridge out of the drum unit.

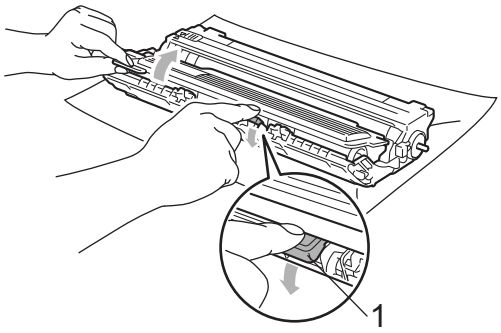


**WARNING**

DO NOT put a toner cartridge into a fire. It could explode, resulting in injuries.

DO NOT use cleaning materials that contain ammonia, alcohol, any type of spray or any type of flammable substance to clean the inside or outside of the machine. Doing this may cause a fire or electrical shock. See *Routine maintenance* on page 157 for how to clean the machine.

Be careful not to inhale toner.

## IMPORTANT

- We recommend that you place the drum unit and toner cartridge assembly on a clean, flat, level, stable surface with a sheet of disposable paper or cloth underneath it in case you accidentally spill or scatter toner.
- To prevent damage to the machine from static electricity, DO NOT touch the electrodes shown in the illustration.

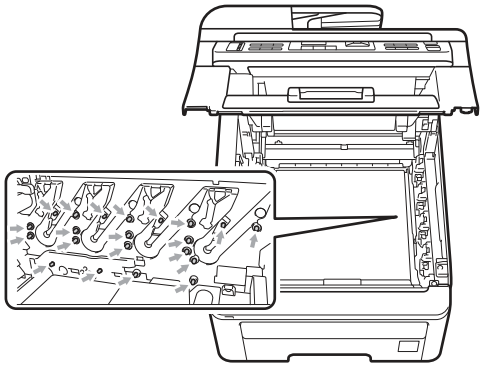

- Handle the toner cartridge carefully. If toner scatters on your hands or clothes, wipe or wash it off with cold water at once.
- To avoid print quality problems, DO NOT touch the shaded parts shown in the illustrations.

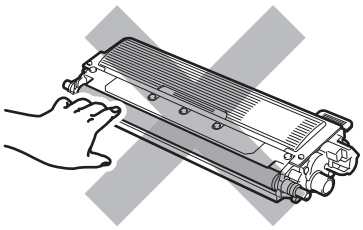

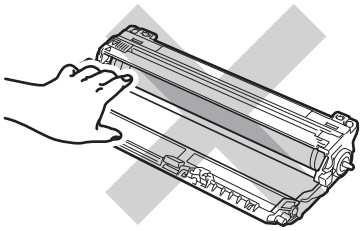

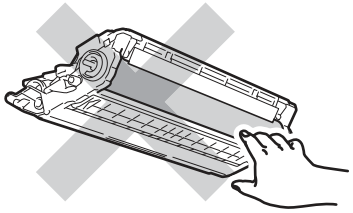

### Note

- Be sure to seal up the toner cartridge tightly in a suitable bag so that toner powder does not spill out of the cartridge.
- Go to http://www.brother.com/original/index.html for instructions on how to return your used consumable items to the Brother collection program. If you choose not to return your used consumable, please discard the used consumable according to local regulations, keeping it separate from domestic waste. If you have questions, call your local waste disposal office.

5 Clean the primary corona wire inside the drum unit by gently sliding the green tab from left to right and right to left several times.

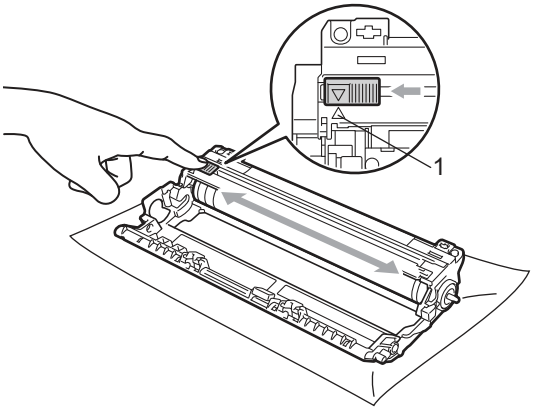


### Note

Be sure to return the tab to the home position (▲) (1). If you do not, printed pages may have a vertical stripe.

6 Unpack the new toner cartridge. Gently shake it from side to side several times to distribute the toner evenly inside the cartridge.

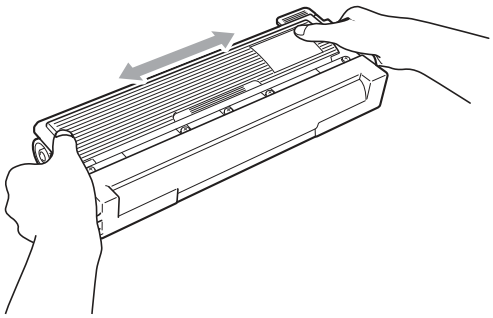

## IMPORTANT

- Wait to unpack the new toner cartridge until immediately before you put it in the machine. If a toner cartridge is left unpacked for a long time, the toner life will be shortened.
- If an unpacked drum unit is put in direct sunlight or room light, the unit may be damaged.

## CAUTION

**HOT SURFACE**

Put the toner cartridge in the drum unit immediately after you have removed the protective cover. To prevent any degradation to the print quality, DO NOT touch the shaded parts shown in the illustrations.

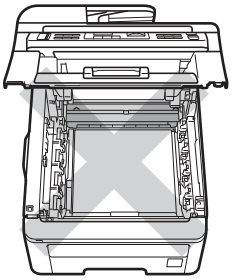

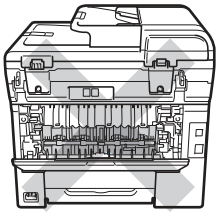

## IMPORTANT

Brother strongly recommends that you DO NOT refill the toner cartridge provided with your machine. We also strongly recommend that you continue to use only Genuine Brother Brand replacement toner cartridges. Use or attempted use of potentially incompatible toner and/or cartridges in the Brother machine may cause damage to the machine and/or may result in unsatisfactory print quality. Our warranty coverage does not apply to any problem that is caused by the use of unauthorized third party toner and/or cartridges. To protect your investment and obtain premium performance from the Brother machine, we strongly recommend the use of Genuine Brother Supplies.

7 Pull off the protective cover.

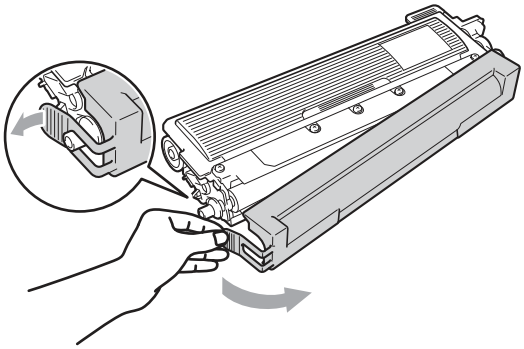

8 Put the new toner cartridge firmly into the drum unit until you hear it lock into place.

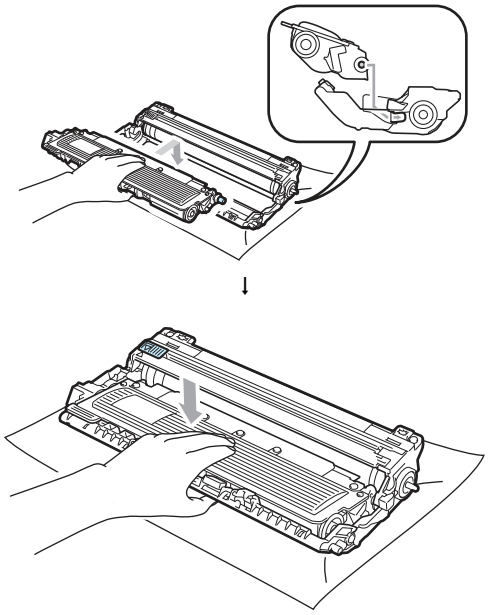

**Note**

Make sure that you put in the toner cartridge properly or it may separate from the drum unit.

9 Slide the drum unit and toner cartridge assembly into the machine. Make sure that you match the toner cartridge color to the same color label on the machine.

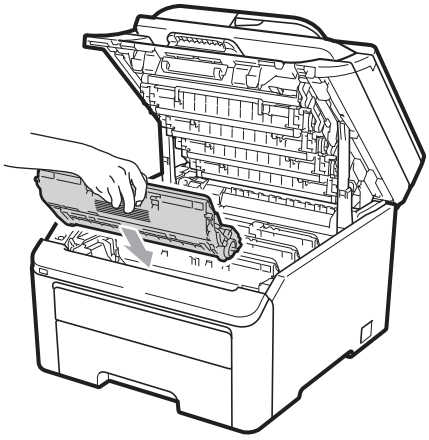

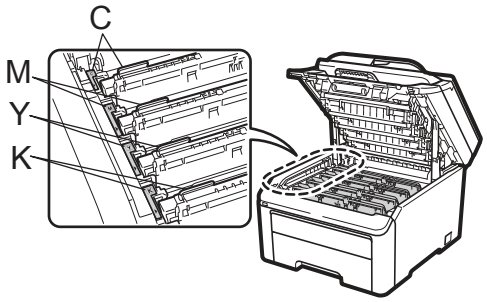


C-Cyan M-Magenta Y-Yellow K-Black

10 Close the top cover of the machine.

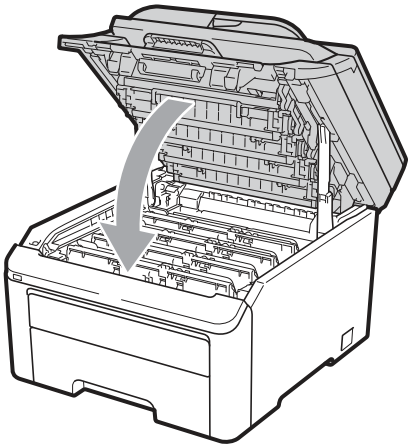

11 Plug the machine's power cord back into the AC power outlet first, and reconnect all cables and the telephone line cord. Turn on the machine's power switch.

**Note**

DO NOT turn off the machine's power switch or open the top cover until the LCD returns to the Ready mode.

**IMPORTANT**

While removing the drum unit, handle it carefully because it may contain toner. If toner scatters on your hands or clothes, wipe or wash it off with cold water at once.

## Drum units

Order No. DR-210CL 4 pc. Drum Set or single drums DR-210CL-BK, DR-210CL-CMY

A new drum unit can print approximately 15,000 A4 or Letter size single-sided pages. DR-210CL Drum Set contains 4 drum units 1 Black (DR-210CL-BK) and 3 Color (DR-210CL-CMY). DR-210CL-BK contains 1 Black drum. DR-210CL-CMY contains 1 Color drum.

Drum wear and tear occurs due to use and rotation of the drum and interaction with paper, toner and other materials in the paper path. In designing this product, Brother decided to use the number of rotations of the drum as a reasonable determinant of the drum life. When a drum reaches the factory-established rotation limit corresponding to the rated page yield, the product LCD display will advise you to replace the applicable drum(s). The product will continue to function; however, print quality may not be optimal.

As the drums rotate in unison during the various stages of operation (regardless of whether toner is deposited on the page) and because damage to a single drum unit is not likely, you will need to replace all of the drums at once (unless you have replaced an individual drum [DR-210CL-BK for black and DR-210CL-CMY for Color] for reasons other than reaching its rated life). For your convenience, Brother sells the drum units as a set of four (DR-210CL).

**Note**

- There are many factors that determine the actual drum life, such as the temperature, humidity, type of paper, type of toner used and so on. Under ideal conditions, the average drum life is estimated at approximately 15,000 pages. The actual number of pages that your drum will print may be significantly less than this estimate. Because we have no control over the many factors that determine the actual drum life, we cannot guarantee a minimum number of pages that will be printed by your drum.
- For best performance, use only genuine Brother toner. The machine should be used only in a clean, dust-free environment with adequate ventilation.
- Printing with a third-party drum unit may reduce not only the print quality but also the quality and life of the machine itself. Warranty coverage does not apply to problems caused by the use of a third-party drum unit.

### Drum End Soon messages

```
Drums End Soon
```

If the LCD shows `Drums End Soon`, it means the 4 drum units are near the end of their life. Buy a new drum unit set (DR-210CL) and have it ready before you get a Replace Drums message. To replace the drum units, see *Replacing the drum units* on page 177.

```
Drum End Soon(X)
```

If only a specified drum is near the end of its life, the LCD shows the `Drum End Soon(X)` message. (X) indicates the drum unit color that is near the end of its life. ((K) =Black, (Y)=Yellow, (M)=Magenta, (C)=Cyan). Buy a new drum unit DR-210CL-BK (for Black) or a DR-210CL-CMY (for either Y, M, C colors) and have it ready before you get a `Replace Drums` message. To replace the drum units, see *Replacing the drum units* on page 177.

### Replace Drums messages

When the following message appears on the LCD, you need to replace the drum units:

```
Replace Drums
```

If only the specified drum needs to be replaced, the LCD shows the `Replace Drum(X)` message. (X) indicates the drum unit color that you need to replace. ((K)=Black, (Y)=Yellow, (M)=Magenta, (C)=Cyan).

```
Drum Error
```

<Scrolling message>

`Replace the Drum Unit. Black/ Cyan/ Magenta/ Yellow. Refer to the User's Guide.` [1]

[1] Only the color you need to replace will be shown

The `Drum Error` message has two cases: If the scrolling message shows `Replace the Drum Unit.` you will need to replace the drum unit. If the scrolling message shows `Slide the Green tab on Drum Unit.` you do not need to replace the drum unit, you just need to clean the corona wires. (See *Cleaning the corona wires* on page 160.)

### Replacing the drum units

**IMPORTANT**

- While removing the drum unit, handle it carefully because it may contain toner. If toner scatters on your hands or clothes, wipe or wash it off with cold water at once.
- Every time you replace the drum unit, clean the inside of the machine. (See *Routine maintenance* on page 157.)

1. Turn off the machine's power switch. Unplug the telephone line cord first, and then unplug the power cord from the AC power outlet.

2 Fully open the top cover by lifting up on the handle (1).

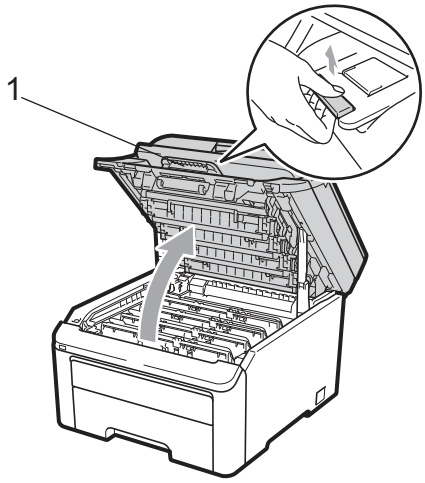


**IMPORTANT**

When the scanner is open, you cannot open the top cover.

3 Take out the drum unit and toner cartridge assembly for the color shown on the LCD.

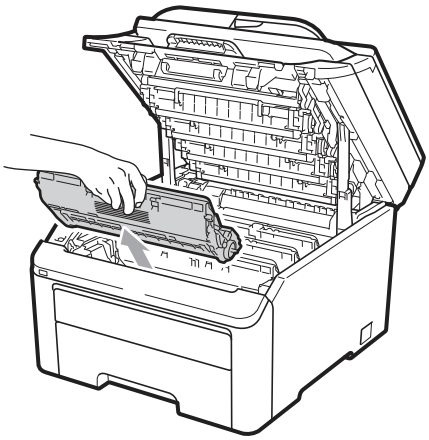

4 Push down the green-labeled lock lever (1) and take the toner cartridge out of the drum unit.

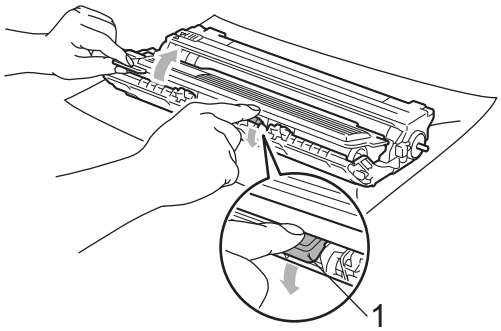


**WARNING**

DO NOT put a toner cartridge into a fire. It could explode, resulting in injuries.

DO NOT use cleaning materials that contain ammonia, alcohol, any type of spray, or any type of flammable substance to clean the outside or inside of the machine. Doing this may cause a fire or electrical shock. See *Routine maintenance* on page 157 for how to clean the machine.

Be careful not to inhale toner.

## IMPORTANT

- We recommend that you place the drum unit and toner cartridge assembly on a clean, flat surface with a sheet of disposable paper or cloth underneath it in case you accidentally spill or scatter toner.
- To prevent damage to the machine from static electricity, DO NOT touch the electrodes shown in the illustration.

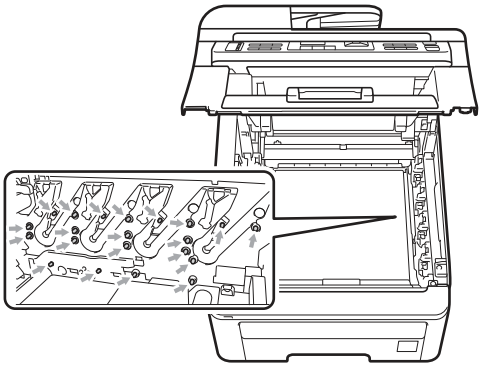

- Handle the toner cartridge carefully. If toner scatters on your hands or clothes, wipe or wash it off with cold water at once.
- To avoid print quality problems, DO NOT touch the shaded parts shown in the illustrations.

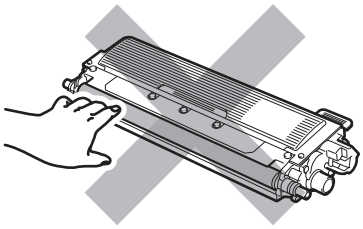

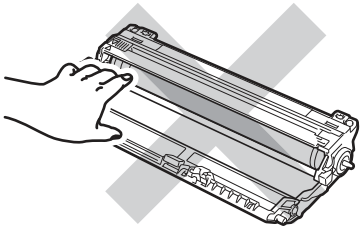

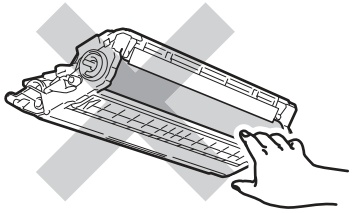

### Note

- Be sure to seal up the toner cartridge tightly in a suitable bag so that toner powder does not spill out of the cartridge.
- Go to http://www.brother.com/original/index.html for instructions on how to return your used consumable items to the Brother collection program. If you choose not to return your used consumable, please discard the used consumable according to local regulations, keeping it separate from domestic waste. If you have questions, call your local waste disposal office.

5 Unpack the new drum unit and remove the protective cover.

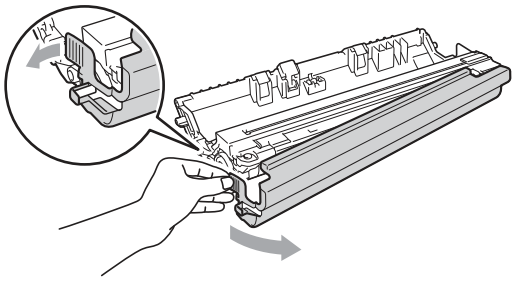

## IMPORTANT

Wait to unpack the new drum unit until immediately before you put it in the machine. Exposure to direct sunlight or room light may damage the drum unit.

6 Put the toner cartridge firmly into the new drum unit until you hear it lock into place.

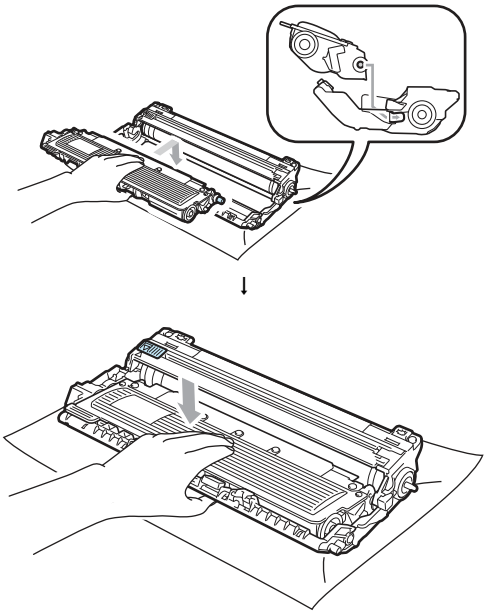

**IMPORTANT**

Make sure that you put in the toner cartridge properly or it may separate from the drum unit.

7 Slide the drum unit and toner cartridge assembly into the machine. Make sure that you match the toner cartridge color to the same color label on the machine.

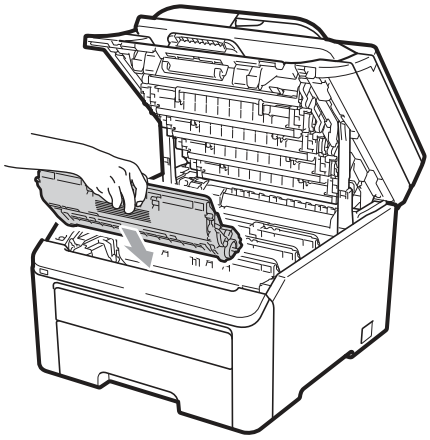

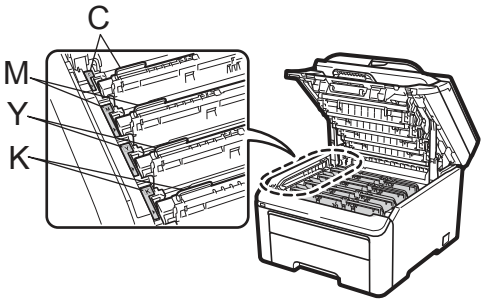


C-Cyan M-Magenta Y-Yellow K-Black

8 Close the top cover of the machine.

### Resetting the drum counter

When you replace a drum unit with a new one, you need to reset the drum counter by completing the following steps:

1. Plug the machine's power cord back into the AC power outlet first, and reconnect all cables and telephone line cord. Turn on the machine's power switch.
2. (For MFC-9325CW) Press **Menu**, **8**, **4**. (For MFC-9125CN) Press **Menu**, **6**, **4**.
3. Press ▲ or ▼ to choose the color of the drum you replaced. Press **OK**.
4. Press **1** to reset the drum unit counter.
5. Press **Stop/Exit**.

## Replacing the belt unit

Order No. BU-200CL

A new belt unit can print approximately 50,000 A4 or Letter size single-sided pages.

### Belt End Soon message

```
Belt End Soon
```

If the LCD shows `Belt End Soon`, it means the belt unit is near the end of its life. Buy a new belt unit and have it ready before you get a `Replace Belt` message.

### Replace Belt message

When the following message appears on the LCD, you need to replace the belt unit:

```
Replace Belt
```

**IMPORTANT**

- DO NOT touch the surface of the belt unit. If you touch it, it could degrade print quality.
- Damage caused by incorrect handling of the belt unit may void your warranty.

1. Turn off the machine's power switch. Unplug the telephone line cord first, and then unplug the power cord from the AC power outlet.
2. Fully open the top cover by lifting up on the handle (1).

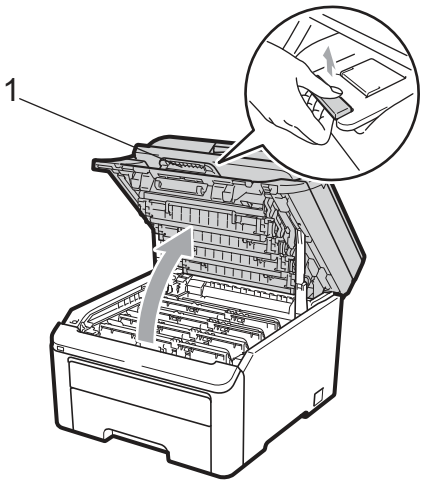


**IMPORTANT**

When the scanner is open, you cannot open the top cover.

3 Take out all the drum unit and toner cartridge assemblies.

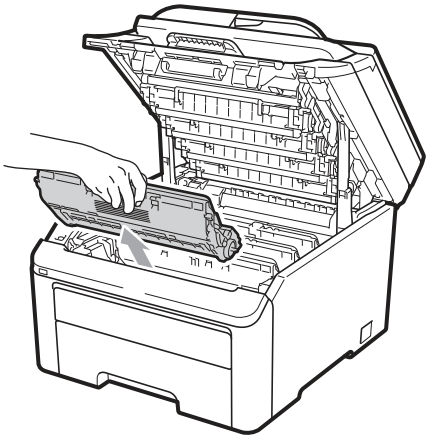

## IMPORTANT

- We recommend that you place the drum unit and toner cartridge assembly on a clean, flat surface with a sheet of disposable paper or cloth underneath it in case you accidentally spill or scatter toner.
- To prevent damage to the machine from static electricity, DO NOT touch the electrodes shown in the illustration.

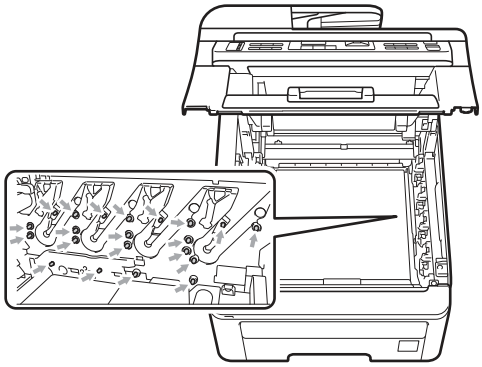

- Handle the toner cartridge carefully. If toner scatters on your hands or clothes, wipe or wash it off with cold water at once.
- To avoid print quality problems, DO NOT touch the shaded parts shown in the illustrations.

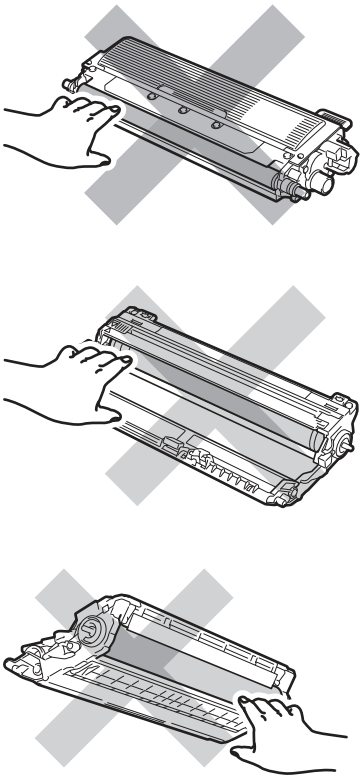

4 Hold the green handle of the belt unit and lift the belt unit up, then pull it out.

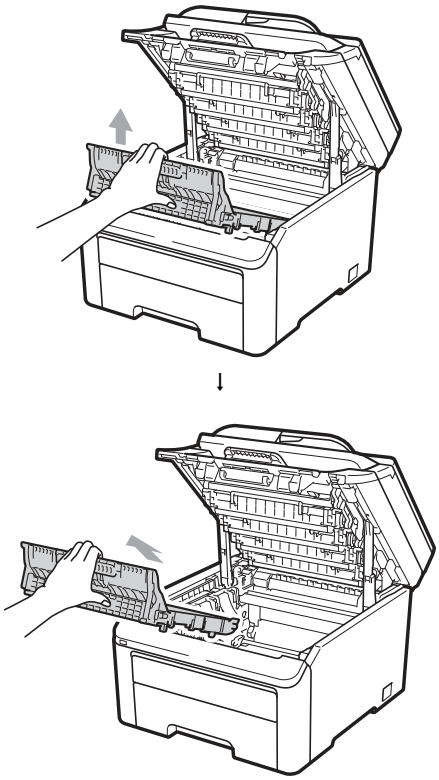

**IMPORTANT**

To avoid print quality problems, DO NOT touch the shaded parts shown in the illustration.

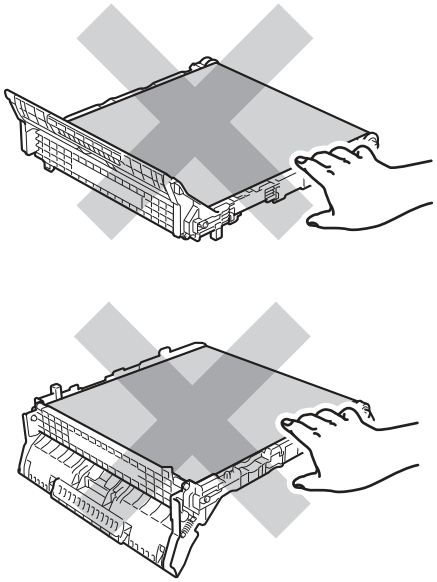

5 Unpack the new belt unit and put the new belt unit in the machine.

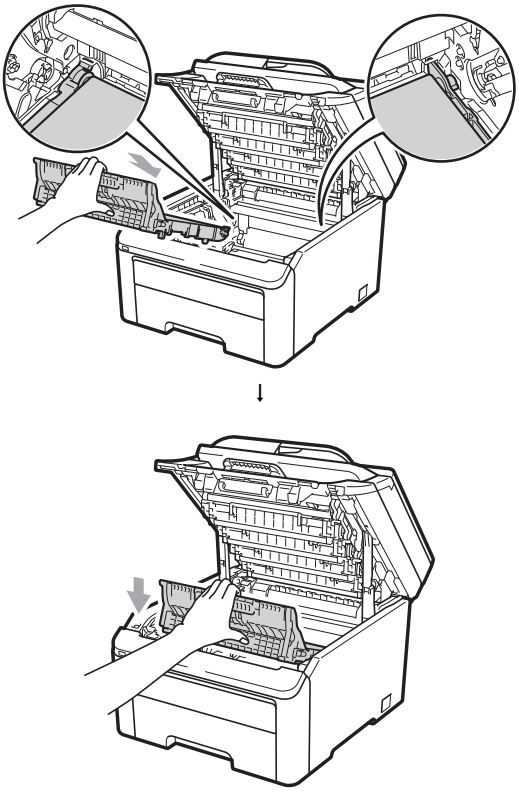

6 Slide each drum unit and toner cartridge assembly into the machine. Make sure that you match the toner cartridge color to the same color label on the machine. Repeat this for all the drum unit and toner cartridge assemblies.

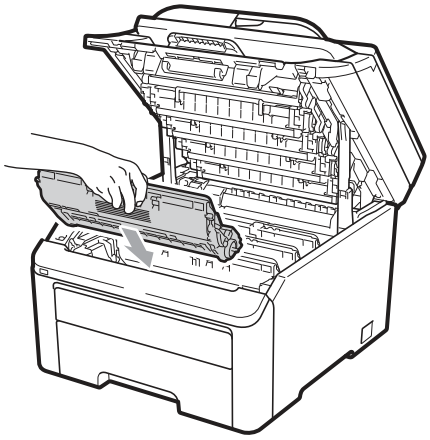

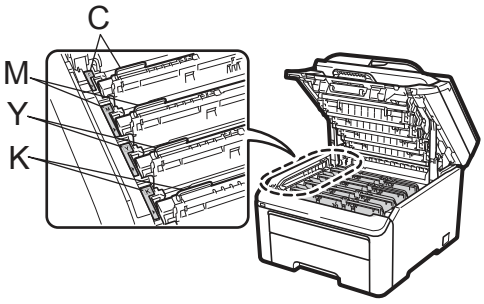


C-Cyan M-Magenta Y-Yellow K-Black

7 Close the top cover of the machine.

**When you replace a belt unit with a new one, you need to reset the belt unit counter by completing the following steps:**

1. Plug the machine's power cord back into the AC power outlet first, and reconnect all cables and telephone line cord. Turn on the machine's power switch.
2. (For MFC-9325CW) Press **Menu**, **8**, **4**.
   (For MFC-9125CN) Press **Menu**, **6**, **4**.
3. Press ▲ or ▼ to select `Belt Unit`. Press **OK**.
4. Press **1** to reset the belt unit counter.
5. Press **Stop/Exit**.

## Replacing the waste toner box

Order No. WT-200CL

A new waste toner box can print approximately 50,000 A4 or Letter size single-sided pages.

### WT Box End Soon message

```
WT Box End Soon
```

If the LCD shows `WT Box End Soon`, it means the waste toner box is near the end of its life. Buy a new waste toner box and have it ready before you get a `Replace WT Box` message.

### Replace WT Box message

When the following message appears on the LCD, you need to replace the waste toner box:

```
Replace WT Box
```

**IMPORTANT**

DO NOT reuse the waste toner box.

**WARNING**

DO NOT put the waste toner box into a fire. It could explode.

Be careful not to spill the toner. DO NOT inhale or allow it to get into your eyes.

1. Turn off the machine's power switch. Unplug the telephone line cord first, and then unplug the power cord from the AC power outlet.
2. Fully open the top cover by lifting up on the handle (1).

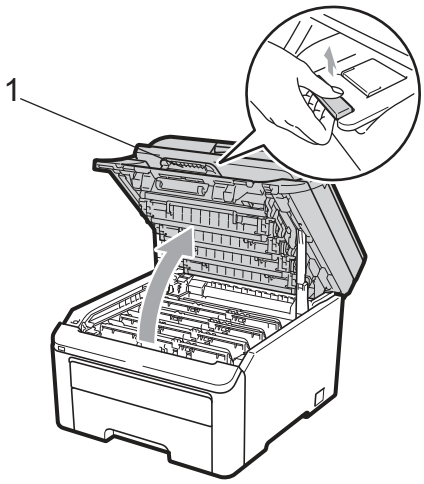


**IMPORTANT**

When the scanner is open, you cannot open the top cover.

3 Take out all the drum unit and toner cartridge assemblies.

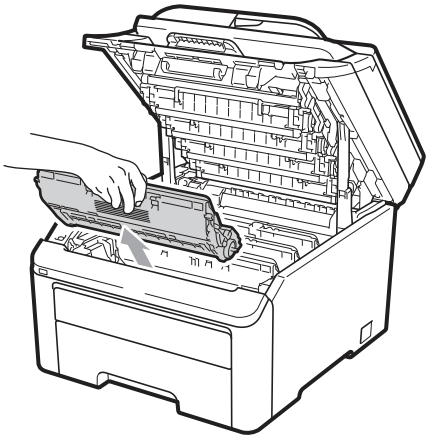

**IMPORTANT**

- We recommend that you place the drum unit and toner cartridge assembly on a clean, flat surface with a sheet of disposable paper or cloth underneath it in case you accidentally spill or scatter toner.
- To prevent damage to the machine from static electricity, DO NOT touch the electrodes shown in the illustration.

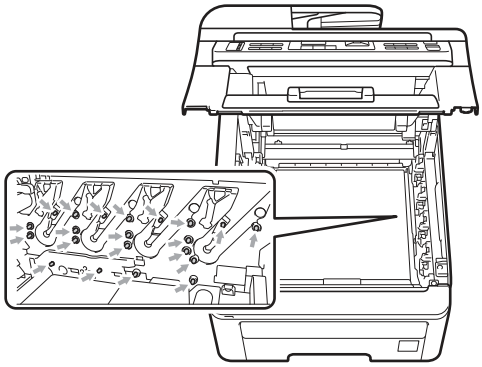

- Handle the toner cartridge carefully. If toner scatters on your hands or clothes, wipe or wash it off with cold water at once.
- To avoid print quality problems, DO NOT touch the shaded parts shown in the illustrations.

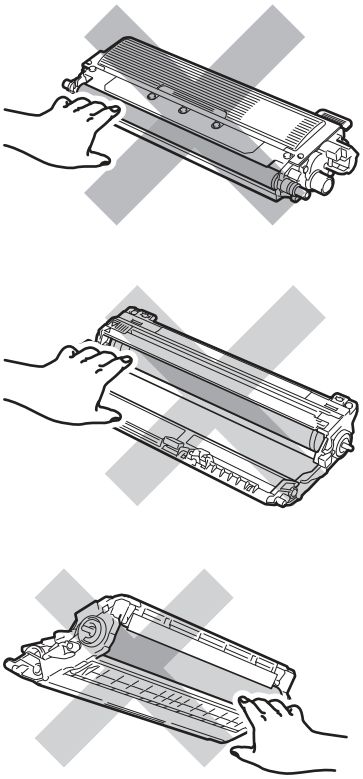

4 Hold the green handle of the belt unit and lift the belt unit up, then pull it out.

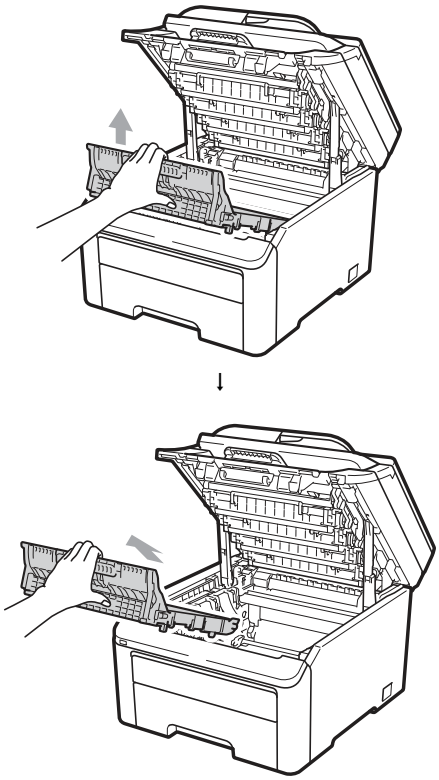

**IMPORTANT**

To avoid print quality problems, DO NOT touch the shaded parts shown in the illustration.

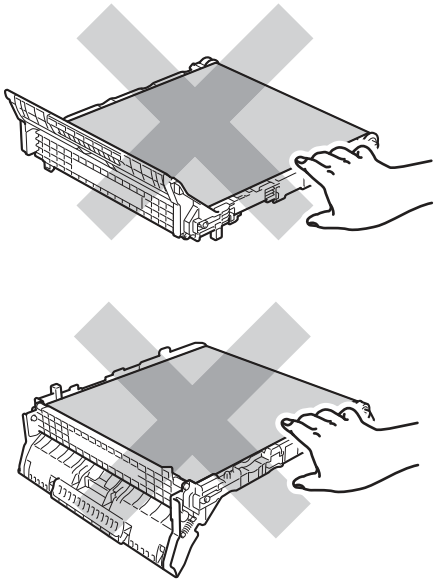

5 Remove the orange packing material and discard it.

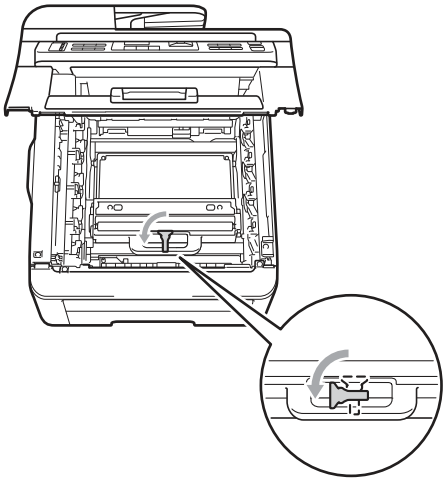

↓

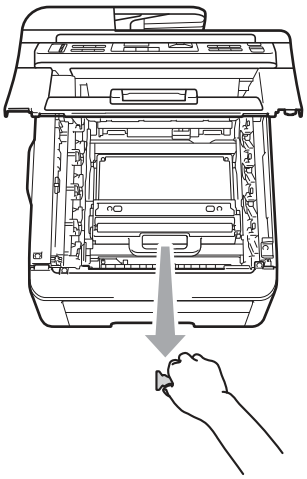

**Note**

This step is only necessary when you are replacing the waste toner box for the first time. The orange packing is installed at the factory to protect your machine during shipment. The orange packing is not required for replacement waste toner boxes.

6 Hold the green handle of the waste toner box and remove the waste toner box from the machine.

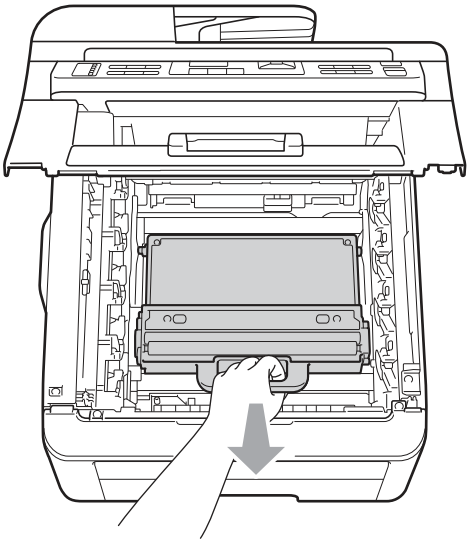

**CAUTION**

Handle the waste toner box carefully in case you accidentally spill or scatter toner. If toner scatters on your hands or clothes, wipe or wash it off with cold water at once.

**Note**

Discard the used waste toner box according to local regulations, keeping it separate from domestic waste. If you have questions, call your local waste disposal office.

7 Unpack the new waste toner box and put the new waste toner box in the machine.

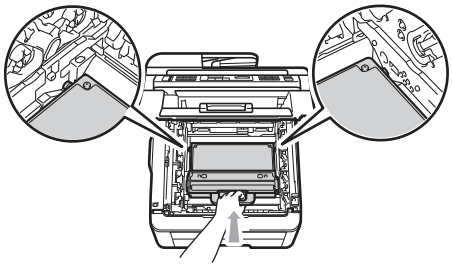

8 Put the belt unit in the machine.

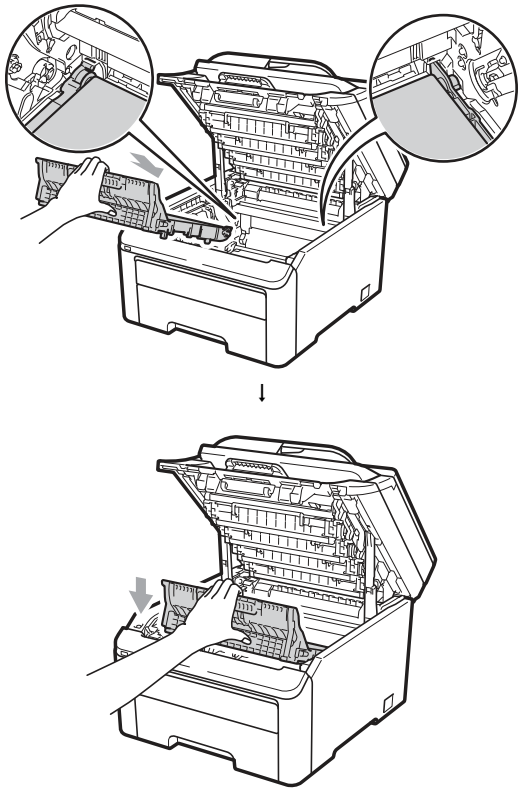

9 Slide each drum unit and toner cartridge assembly into the machine. Make sure that you match the toner cartridge color to the same color label on the machine. Repeat this for all the drum unit and toner cartridge assemblies.

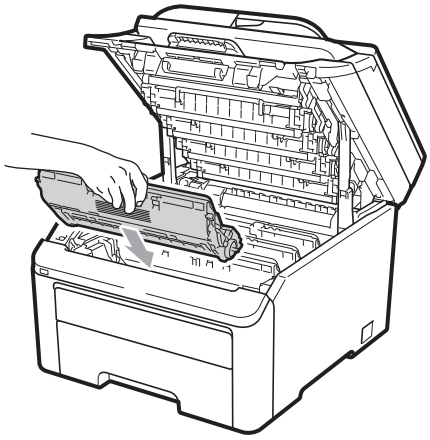

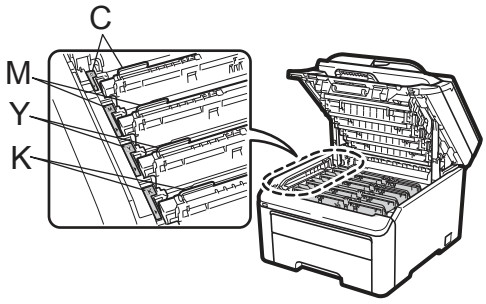


C-Cyan M-Magenta Y-Yellow K-Black

10 Close the top cover of the machine.

C

# Replacing periodic maintenance parts

The periodic maintenance parts will need to be replaced regularly to maintain the print quality. The parts listed below will have to be replaced after printing approximately 50,000 pages [1]. Please call Brother Customer Service when the following messages appear on the LCD.

[1] A4 or Letter size single-sided pages.

| LCD message | Description |
|---|---|
| `Replace PF Kit` | Replace the paper feeding kit for the paper tray. |
| `Replace Fuser` | Replace the fuser unit. |

# Machine Information

## Checking the Serial Number

You can see the machine's Serial Number on the LCD.

1. (For MFC-9325CW) Press **Menu**, **8**, **1**.
   (For MFC-9125CN) Press **Menu**, **6**, **1**.

   ```
   Machine Info.
   1.Serial No.
   ```

2. Press **Stop/Exit**.

## Checking the Page Counters

You can see the machine's Page Counters for copies, printed pages, reports and lists, faxes or a summary total.

1. (For MFC-9325CW) Press **Menu**, **8**, **2**.
   (For MFC-9125CN) Press **Menu**, **6**, **2**.

   ```
   Machine Info.
   2.Page Counter
   ```

2. Press ▲ or ▼ to see `Total`, `Fax/List`, `Copy` or `Print`.

3. Press **Stop/Exit**.

## Checking the remaining life of parts

You can see the machine's parts life on the LCD.

1. (For MFC-9325CW) Press **Menu**, **8**, **3**.
   (For MFC-9125CN) Press **Menu**, **6**, **3**.

   ```
   Machine Info.
   3.Parts Life
   ```

2. Press ▲ or ▼ to choose `1.Drum`, `2.Belt Unit`, `3.PF Kit` or `4.Fuser`.
   Press **OK**.

3. Press **Stop/Exit**.

**Note**

The life check will be accurate only if you have reset the part counter when you installed a new part. It will not be accurate if that part's life counter was reset during the life of the used part.

## Reset functions

The following reset functions are available:

1 `Network`

You can reset the print server back to its default factory settings such as the password and IP address information.

2 `Address & Fax`

Address & Fax resets the following settings:

- Address Book

  (One Touch Dial/Speed Dial/Setup Groups)

- Programmed fax jobs in the memory

  (Polled TX, Delayed Fax)

- Station ID

  (name and number)

- Coverpage Msg

  (comments)

- Remote Fax Option

  (Remote Access Code, Fax Storage, Fax Forwarding, Paging and PC-Fax)

- Report settings

  (Transmission Verification Report/Tel Index List/Fax Journal)

- Setting Lock password

3 `All Settings`

You can reset all the machine settings back to the settings that were set at the factory.

Brother strongly recommends you perform this operation when you dispose of the machine.

**Note**

Unplug the interface cable before you choose `Network` or `All Settings`.

C

## How to reset the machine

1. (USA) Press **Menu**, **0**, **6**.
   (Canada) Press **Menu**, **0**, **7**.

   ```
   Initial Setup
   6.Reset
   ```

2. Press ▲ or ▼ to choose the reset function you want to use.
   Press **OK**.

3. Do one of the following;
   - To reset the settings, press **1** and go to step ❹.
   - To exit without making changes, press **2** and go to step ❺.

4. You will be asked to reboot the machine. Do one of the following;
   - To reboot the machine press **1**. The machine will begin the reset.
   - To exit without rebooting the machine, press **2**. Go to step ❺.

5. Press **Stop/Exit**.

**Note**

You can also reset the Network settings by pressing **Menu**, **7**, **0** (for MFC-9325CW) or **Menu**, **5**, **0** (for MFC-9125CN).

# Packing and shipping the machine

When you transport the machine, use the packing materials that came with your machine. If you do not pack the machine properly, you could void your warranty. The machine should be adequately insured with the carrier.

**⚠ CAUTION**

When shipping the machine, each DRUM UNIT / TONER CARTRIDGE ASSEMBLY and the WASTE TONER BOX must be removed from the machine and put in a plastic bag. Failure to remove these items and put them in plastic bags before shipping may cause severe damage to the machine and may VOID THE WARRANTY.

Make sure that you have the following parts for repacking:

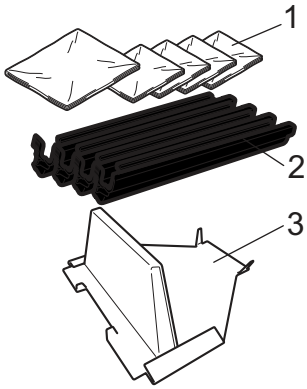


1 **Plastic bags - to be supplied by you, the user; one for the waste toner box, and one each for the four drum and toner cartridge assemblies**

2 **Protective covers that were attached to the original drum and toner cartridge assemblies**

3 **Packing material for locking the belt unit**

## WARNING

This machine is heavy and weighs approximately 50.5 lb. (22.9 kg). To prevent injuries use at least two people to lift the machine. Be careful not to pinch your fingers when you put the machine back down.

## IMPORTANT

If you pack the machine soon after turning off the power make sure the machine has cooled down completely.

1. Turn off the machine's power switch.
2. Unplug the machine from the telephone wall jack.
3. Unplug all the cables and AC power cord from the machine.
4. Fully open the top cover and take out all the drum unit and toner cartridge assemblies.

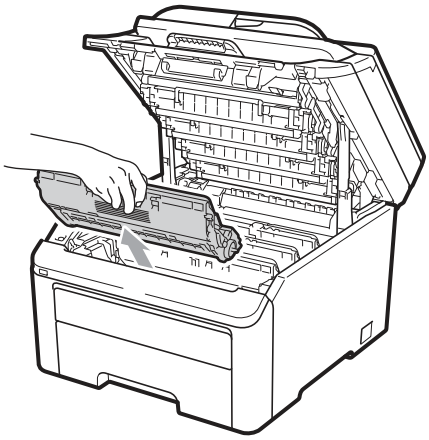

## CAUTION

DO NOT touch the shaded parts shown in the illustration.

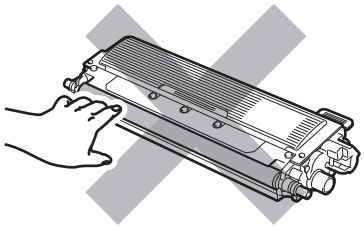

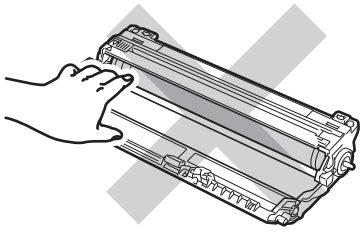

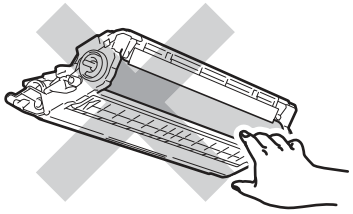

C

5 Attach the protective cover to each of the drum unit and toner cartridge assemblies.

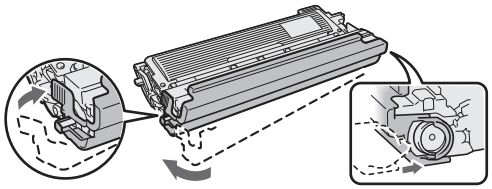

6 Put each assembly into a plastic bag and completely seal each bag.

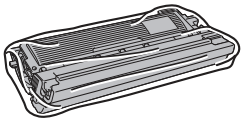

7 Remove the belt unit by holding the green handle and lifting the belt unit up and out of the machine.

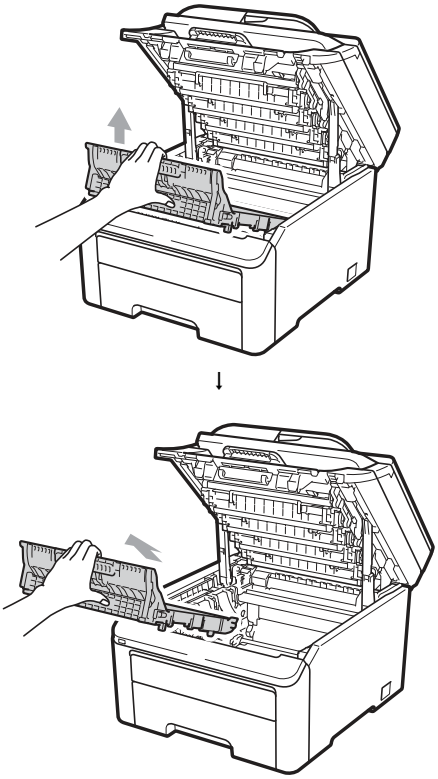

8 Remove the waste toner box from the machine, and then put it in a plastic bag and seal the bag completely.

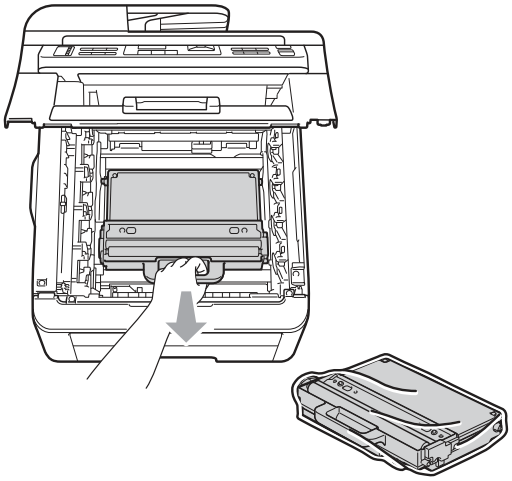

9 Reinstall the belt unit back in the machine.

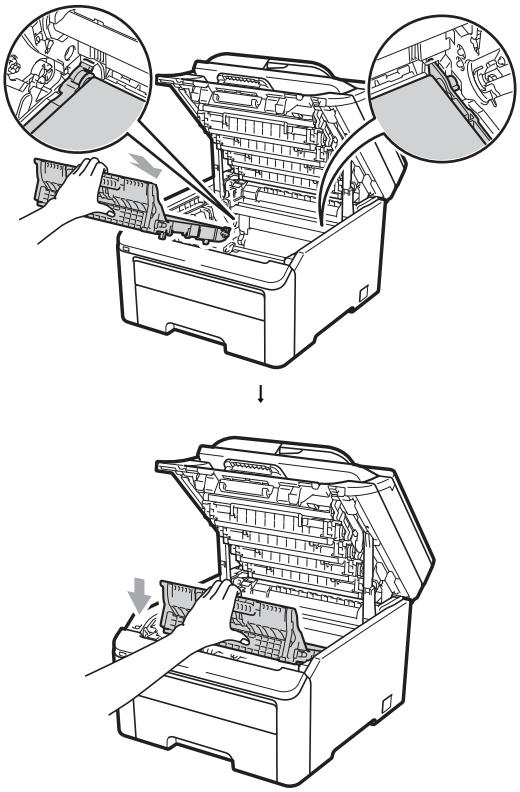

10 Reinstall the original packing material in the machine.

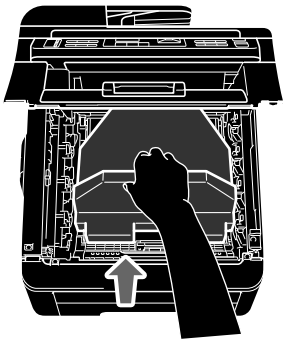

11 Close the top cover.

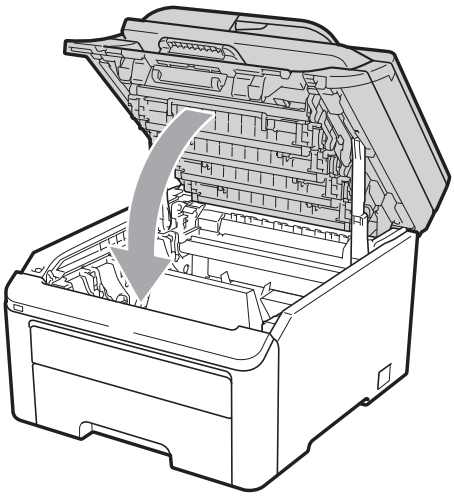

12 Put the waste toner box and one drum unit and toner cartridges assembly in the Styrofoam piece.

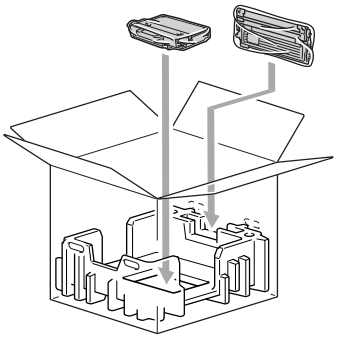

13 Using two people, place the machine into the plastic bag.

14 Put the machine and the Styrofoam pieces into the carton. Match the front side of the machine to the “FRONT” mark on the Styrofoam pieces. Put the Styrofoam pieces for the drum unit and toner cartridge assemblies on the top of the machine.

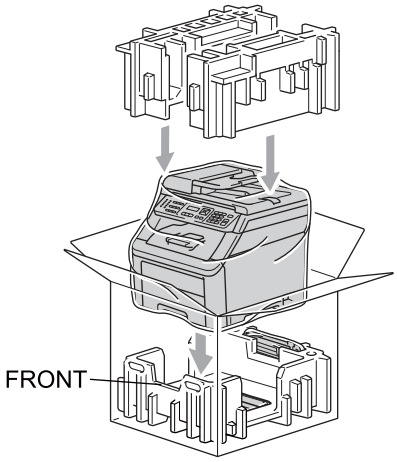


15 Put the power cord, and the three remaining drum unit and toner cartridge assemblies into the Styrofoam pieces as shown in the illustration.

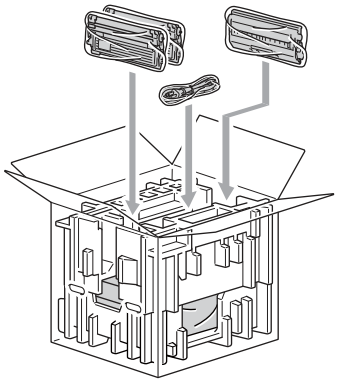

16 Put the four carton trays on the top.

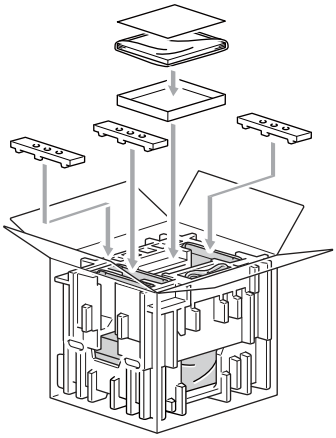

**Note**

If you are returning your machine to Brother as part of the Exchange Service, pack only the machine. Keep all separate parts, including the drum unit and toner cartridge assemblies, and printed materials to use with your ‘Exchange’ machine.

17 Close the carton and tape it shut.

# D Menu and features

## On-screen programming

Your machine has been designed to be easy to use. The LCD provides on-screen programming using the menu keys.

We have created step by step on-screen instructions to help you program your machine. Simply follow the steps as they guide you through the menu selections and programming options.

### Menu table

You can program your machine by using the *Menu table* on page 199. These pages list the menu selections and options.

Press **Menu** followed by the menu numbers to program your machine.

For example, to set `Beeper` volume to `Low`:

1. Press **Menu**, **1**, **3**, **2**.
2. Press ▲ or ▼ to choose `Low`.
3. Press **OK**.

### Memory storage

Your menu settings are stored permanently, and in the event of a power failure will *not* be lost. Temporary settings (for example, Contrast, Overseas Mode) *will* be lost. Also, during a power failure the machine will retain the date and time and any fax messages that are in the memory for approximately 60 hours.

## Menu keys

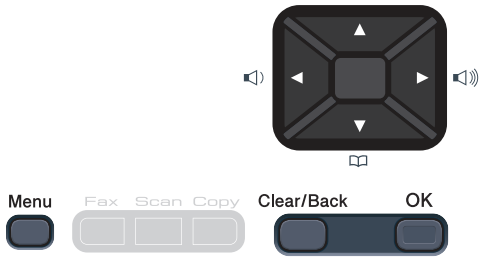


| | |
|---|---|
| Menu | Access the menu. |
| OK | Go to the next menu level.<br>Accept an option. |
| Clear/Back | Exit the menu by pressing repeatedly.<br>Go back to the previous menu level. |
| ▲ ▼ | Scroll through the current menu level. |
| ◀ ▶ | Go back to the previous menu level or forward to the next menu level. |
| Stop/Exit | Exit the menu or stop the current operation. |

D

## How to access the menu mode

1. Press **Menu**.

2. Choose an option.
   MFC-9125CN:
   - Press **1** for General Setup menu.
   - Press **2** for Fax menu.
   - Press **3** for Copy menu.
   - Press **4** for Printer menu.
   - Press **5** for Network menu.
   - Press **6** for Machine Info. menu.
   - Press **9** for Service menu. [1]
   - Press **0** for Initial Setup menu.

   MFC-9325CW:
   - Press **1** for General Setup menu.
   - Press **2** for Fax menu.
   - Press **3** for Copy menu.
   - Press **4** for Printer menu.
   - Press **5** for USB Direct I/F menu.
   - Press **6** for Print Reports menu.
   - Press **7** for Network menu.
   - Press **8** for Machine Info. menu.
   - Press **9** for Service menu. [1]
   - Press **0** for Initial Setup menu.

   [1] This will appear only when the LCD shows an error message.

   You can also scroll through each menu level by pressing ▲ or ▼ for the direction you want.

3. Press **OK** when the option you want appears on the LCD.
   The LCD will then show the next menu level.

4. Press ▲ or ▼ to scroll to your next menu selection.

5. Press **OK**.
   When you have finished setting an option, the LCD will show `Accepted`.

6. Press **Stop/Exit** to exit Menu mode.

# Menu table

The factory settings are shown in Bold with an asterisk.

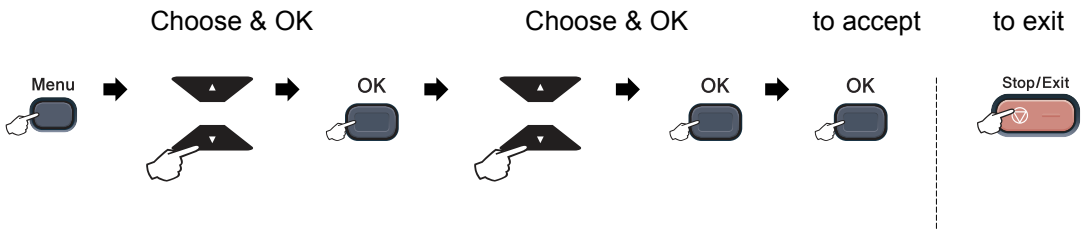


| Main Menu | Submenu | Menu Selections | | Options | Descriptions | Page |
|---|---|---|---|---|---|---|
| **1.General Setup** | **1.Mode Timer** | — | — | 0 Sec<br>30 Secs<br>1 Min<br>**2 Mins***<br>5 Mins<br>Off | Sets the time to return to Fax mode and the time the machine will change from individual user to public user when using Secure Function Lock. | 25 |
| | **2.Paper** | **1.Paper Type** | | Thin<br>**Plain***<br>Thick<br>Thicker<br>Recycled Paper | Sets the type of paper in the paper tray. | 25 |
| | | **2.Paper Size** | | A4<br>**Letter***<br>Legal<br>Executive<br>A5<br>A5 L<br>A6<br>B5<br>B6<br>Folio | Sets the size of the paper in the paper tray. | 25 |

D

| Main Menu | Submenu | Menu Selections | Options | Descriptions | Page |
|---|---|---|---|---|---|
| **1.General Setup**<br>(Continued) | **3.Volume** | **1.Ring** | Off<br>Low<br>**Med***<br>High | Adjusts the ring volume. | 26 |
| | | **2.Beeper** | Off<br>Low<br>**Med***<br>High | Adjusts the volume level of the beeper. | 26 |
| | | **3.Speaker** | Off<br>Low<br>**Med***<br>High | Adjusts the speaker volume. | 26 |
| | **4.Auto Daylight** | — | On<br>**Off*** | Changes for Daylight Savings Time automatically. | 27 |
| | **5.Ecology** | **1.Toner Save** | On<br>**Off*** | Increases the page yield of the toner cartridge. | 27 |
| | | **2.Sleep Time** | Range varies depending on model.<br>**005Min*** | Conserves power. | 27 |
| | **6.LCD Contrast** | — | ▼-□□□□■+▲<br>▼-□□□■□+▲<br>**▼-□□■□□+▲***<br>▼-□■□□□+▲<br>▼-■□□□□+▲ | Adjusts the contrast of the LCD. | 28 |
| | **7.Security** | **1.Memory Security**<br>(MFC-9125CN only) | — | Stops unauthorized users from most operations except receiving faces into the memory. | 32 |
| | | **1.Function Lock**<br>(MFC-9325CW only) | — | Can restrict selected machine operation for up to 25 individual users and all other non-authorized Public users. | 29 |
| | | **2.Setting Lock** | — | Stops unauthorized users from changing the machine's current settings. | 34 |

| Main Menu | Submenu | Menu Selections | | Options | Descriptions | Page |
|---|---|---|---|---|---|---|
| **1.General Setup**<br>(Continued) | 8.Document Scan | **1.Glass ScanSize** | | A4<br>**Letter***<br>Legal<br>A5<br>B5<br>Executive<br>Photo<br>Business Card | Adjusts the scan area of the scanner glass to the size of the document. | 39 |
| | | **2.File Size** | **1.Color** | Small<br>**Middle***<br>Large | You can set your own default settings of the data compression rate. | See *Software User's Guide* on the CD-ROM. |
| | | | **2.Gray** | Small<br>**Middle***<br>Large | | |

D

| Main Menu | Submenu | Menu Selections | Options | Descriptions | Page |
|---|---|---|---|---|---|
| 2.Fax | 1.Setup Receive<br>(In Fax mode only) | 1.Ring Delay | 00<br>01<br>02<br>03<br>**04*** | Sets the number of rings before the machine answers in Fax Only or Fax/Tel mode. | 49 |
| | | 2.F/T Ring Time | **20 Secs***<br>30 Secs<br>40 Secs<br>70 Secs | Sets the pseudo/double-ring time in Fax/Tel mode. | 49 |
| | | 3.Easy Receive | **On***<br>Off | Receives fax messages without pressing **Start**. | 50 |
| | | 4.Remote Codes | **On*** (*51, #51)<br>Off | Allows you to answer all calls at an extension or external telephone and use codes to turn the machine on or off. You can personalize these codes. | 61 |
| | | 5.Auto Reduction | **On***<br>Off | Cuts the size of incoming faxes. | 51 |
| | | 6.Print Density | ▼ -■□□+ ▲<br>▼ -□■□+ ▲*<br>▼ -□□■+ ▲ | Makes printouts darker or lighter. | 50 |
| | | 7.Polling RX | — | Sets up your machine to poll another fax machine. | 79 |
| | | 8.Fax Rx Stamp | On<br>**Off*** | Prints the received time and date on the top of the received faxes. | 51 |
| | 2.Setup Send<br>(In Fax mode only) | 1.Contrast | **Auto***<br>Light<br>Dark | Changes the lightness or darkness of faxes you send. | 42 |
| | | 2.Fax Resolution | **Standard***<br>Fine<br>S.Fine<br>Photo | Sets the default resolution for outgoing faxes. | 42 |

| Main Menu | Submenu | Menu Selections | Options | Descriptions | Page |
|---|---|---|---|---|---|
| 2.Fax<br>(Continued) | 2.Setup Send<br>(In Fax mode only)<br>(Continued) | 3.Delayed Fax | — | Sets the time of day in 24 hour format that the delayed faxes will be sent. | 44 |
| | | 4.Batch TX | On<br>**Off*** | Combines delayed faxes going to the same fax number at the same time of day into one transmission. | 44 |
| | | 5.Real Time TX | Next Fax:On<br>Next Fax:Off<br>On<br>**Off*** | Sends a fax without using the memory. | 43 |
| | | 6.Polled TX | On<br>**Off*** | Sets up your machine with a document to be retrieved by another fax machine. | 80 |
| | | 7.Coverpg Setup | **Next Fax:On***<br>Next Fax:Off<br>On<br>Off<br>Print Sample | Automatically sends a cover page you have programmed. | 41 |
| | | 8.Coverpage Msg | — | Sets up your own comments for the fax cover page. | 41 |
| | | 9.Overseas Mode | On<br>**Off*** | If you are having difficulty sending faxes overseas, set this to On. | 44 |
| | 3.Address Book | 1.One Touch Dial | — | Stores up to 8 One Touch Dial numbers, so you can dial by pressing one key (and **Start**). | 65 |
| | | 2.Speed Dial | — | Stores up to 200 Speed Dial numbers, so you can dial by pressing only a few keys (and **Start**). | 66 |
| | | 3.Setup Groups | — | Sets up to 20 Group numbers for Broadcasting. | 69 |

D

| Main Menu | Submenu | Menu Selections | Options | Descriptions | Page |
|---|---|---|---|---|---|
| **2.Fax**<br>(Continued) | **4.Report Setting** | **1.Transmission** | On<br>On+Image<br>**Off***<br>Off+Image | Sets initial setup for Transmission Verification Report. | 81 |
| | | **2.Journal Period** | Off<br>**Every 50 Faxes***<br>Every 6 Hours<br>Every 12 Hours<br>Every 24 Hours<br>Every 2 Days<br>Every 7 Days | Sets the interval for automatic printing of the Fax Journal. | 82 |
| | **5.Remote Fax Opt** | **1.Fwd/Page/Store**<br>(Backup Print) | **Off***<br>Fax Forward<br>Paging<br>Fax Storage<br>PC Fax Receive | Sets the machine to forward fax messages, to call your pager, to store incoming faxes in the memory (so you can retrieve them while you are away from your machine), or to send faxes to your PC.<br>If you choose Fax Forward or PC Fax Receive, you can turn on the safety feature Backup Print. | 72 |
| | | **2.Remote Access** | ---* | Sets your own code for Remote Retrieval. | 76 |
| | | **3.Print Fax** | — | Prints incoming faxes stored in the memory. | 52 |
| | **6.Dial Restrict.** | **1.Dial Pad** | **Off***<br>Enter # twice<br>On | You can set the machine to restrict dialing when using the dial pad. | 35 |
| | | **2.One Touch Dial** | **Off***<br>Enter # twice<br>On | You can set the machine to restrict the dialing of One Touch numbers. | 35 |
| | | **3.Speed Dial** | **Off***<br>Enter # twice<br>On | You can set the machine to restrict the dialing of Speed Dial numbers. | 35 |
| | **7.Remaining Jobs** | — | — | You can check which jobs are in the memory and lets you cancel scheduled jobs. | 45 |

| Main Menu | Submenu | Menu Selections | Options | Descriptions | Page |
|---|---|---|---|---|---|
| **2.Fax**<br>(Continued) | **0.Miscellaneous** | **1.Compatibility** | **High***<br>Normal<br>Basic(for VoIP) | Adjusts the equalization for transmission difficulties.<br>VoIP service providers offer fax support using various standards. If you regularly experience fax transmission errors, choose Basic(for VoIP). | 143 |
| | | **2.Distinctive** | **Off***<br>Set | Uses the telephone company's Distinctive Ring subscriber service to register the ring pattern with the machine. | 54 |
| | | **3.Caller ID** | Display#<br>Print Report | View or print a list of the last 30 Caller IDs stored in the memory. | 56 |
| **3.Copy** | **1.Quality** | — | Text<br>Photo<br>**Auto*** | You can choose the Copy resolution for your type of document. | 89 |
| | **2.Brightness** | — | ▼ -□□□□■+ ▲<br>▼ -□□□■□+ ▲<br>▼ **-□□■□□+ ▲***<br>▼ -□■□□□+ ▲<br>▼ -■□□□□+ ▲ | Adjust the brightness for copies. | 90 |
| | **3.Contrast** | — | ▼ -□□□□■+ ▲<br>▼ -□□□■□+ ▲<br>▼ **-□□■□□+ ▲***<br>▼ -□■□□□+ ▲<br>▼ -■□□□□+ ▲ | Adjusts the contrast for copies.<br>You can change to the higher Copy resolution when you make a text copy with 100% ratio using the scanner glass. | 89 |

D

| Main Menu | Submenu | Menu Selections | Options | Descriptions | Page |
|---|---|---|---|---|---|
| **3.Copy**<br>(Continued) | **4.Color Adjust** | **1.Red** | ▼ -□□□□■+ ▲<br>▼ -□□□■□+ ▲<br>▼ **-□□■□□+ ▲***<br>▼ -□■□□□+ ▲<br>▼ -■□□□□+ ▲ | Adjusts the red color for copies. | 90 |
| | | **2.Green** | ▼ -□□□□■+ ▲<br>▼ -□□□■□+ ▲<br>▼ **-□□■□□+ ▲***<br>▼ -□■□□□+ ▲<br>▼ -■□□□□+ ▲ | Adjusts the green color for copies. | |
| | | **3.Blue** | ▼ -□□□□■+ ▲<br>▼ -□□□■□+ ▲<br>▼ **-□□■□□+ ▲***<br>▼ -□■□□□+ ▲<br>▼ -■□□□□+ ▲ | Adjusts the blue color for copies. | |
| **4.Printer** | **1.Emulation** | — | **Auto***<br>HP LaserJet<br>BR-Script 3 | Chooses the emulation mode. | See *Software User's Guide* on the CD-ROM. |
| | **2.Print Options** | **1.Internal Font** | 1.HP LaserJet<br>2.BR-Script 3 | Prints a list of the machine's internal fonts. | |
| | | **2.Configuration** | — | Prints a list of the machine's printer settings. | |
| | | **3.Test Print** | — | Prints a test page. | |
| | **3.Output Color** | — | **Auto***<br>Color<br>B&W | Chooses color or black & white printed documents. If you choose Auto, the machine selects a suitable option for the document (color or B&W). | |
| | **4.Reset Printer** | — | 1.Reset<br>2.Exit | Restores the printer settings to the original factory default settings. | |
| | **5.Calibration** | — | Calibrate<br>Reset | Adjusts the color density or returns the color calibration to the factory settings. | 167 |

| Main Menu | Submenu | Menu Selections | Options | Descriptions | Page |
|---|---|---|---|---|---|
| **4.Printer**<br>(Continued) | **6.Auto Regist.** | | 1.Start<br>2.Exit | Adjust the print position of each color automatically. | 168 |
| | **7.Manual Regist.** | **1.Print Chart** | — | Print the chart to manually check the registration of the colors. | 168 |
| | | **2.Set Regist.** | 1 Magenta<br>2 Cyan<br>3 Yellow<br>4 Magenta<br>5 Cyan<br>6 Yellow<br>7 Magenta<br>8 Cyan<br>9 Yellow | Sets the correction value on the chart you printed from Print Chart. | |
| | **8.Drum Cleaning** | — | — | Carry out cleaning the drum unit to improve the print quality problem. | 162 |
| | **9.Frequency** | — | **Normal***<br>Low<br>Off | Sets the interval time you want to carry out the auto registration and the calibration. | 168 |
| **5.USB Direct I/F**<br>(MFC-9325CW only) | **1.Direct Print** | **1.Paper Size** | A4<br>**Letter***<br>Legal<br>Executive<br>A5<br>A5 L<br>A6<br>B5<br>B6<br>Folio | Sets the paper size when printing directly from the USB flash memory drive. | 99 |
| | | **2.Media Type** | Thin<br>**Plain***<br>Thick<br>Thicker<br>Recycled Paper | Sets the media type when printing directly from the USB flash memory drive. | 99 |

D

| Main Menu | Submenu | Menu Selections | Options | Descriptions | Page |
|---|---|---|---|---|---|
| **5.USB Direct I/F**<br>(MFC-9325CW only)<br>(Continued) | **1.Direct Print**<br>(Continued) | **3.Multiple Page** | **1in1***<br>2in1<br>4in1<br>9in1<br>16in1<br>25in1<br>1 in 2x2 pages<br>1 in 3x3 pages<br>1 in 4x4 pages<br>1 in 5x5 pages | Sets the page style when printing multiple pages directly from the USB Flash memory drive. | 100 |
| | | **4.Orientation** | **Portrait***<br>Landscape | Sets the page orientation when printing directly from the USB Flash memory drive. | 100 |
| | | **5.Collate** | **On***<br>Off | Enables or disables the page collation when printing directly from the USB Flash memory drive. | 100 |
| | | **6.Print Quality** | **Normal***<br>Fine | Sets the print quality option when printing directly from the USB Flash memory drive. | 100 |
| | | **7.PDF Option** | **Document***<br>Document&Markup<br>Document&Stamps | Sets the PDF option whether to print comments (Markup) or stamps in the PDF file along with the text. | 100 |
| | | **8.Index Print** | **Simple***<br>Details | Sets the index print option, simple format or details. | 100 |
| | **2.Scan to USB** | **1.Resolution** | **Color 100 dpi***<br>Color 200 dpi<br>Color 300 dpi<br>Color 600 dpi<br>Gray 100 dpi<br>Gray 200 dpi<br>Gray 300 dpi<br>B&W 200 dpi<br>B&W 200x100 dpi | Sets the resolution to send the scanned data to USB Flash memory drive. | See *Software User's Guide* on the CD-ROM. |
| | | **2.File Name** | — | Enter the file name of the scanned data. | |

| Main Menu | Submenu | Menu Selections | Options | Descriptions | Page |
|---|---|---|---|---|---|
| **5.USB Direct I/F**<br>(MFC-9325CW only)<br>(Continued) | **3.PictBridge** | **1.Paper Size** | **Letter***<br>A4<br>B5<br>A5<br>B6<br>A6 | Sets the paper size when printing data from a camera with using PictBridge. | 94 |
| | | **2.Orientation** | Letter<br>A4<br>B5<br>A5<br>B6<br>A6<br>Then, you will choose<br>Portrait<br>Landscape | Sets the page orientation when printing data from a camera using PictBridge, If you choose the paper size Letter, A4, or B5, Portrait will be chosen. If you choose A5, B6 or A6, Landscape will be chosen. | |
| | | **3.Date & Time** | On<br>**Off*** | Prints the date and time the photo is being taken on the photo. | |
| | | **4.File Name** | On<br>**Off*** | Prints the file name of the data on the photo. | |
| | | **5.Print Quality** | **Normal***<br>Fine | Sets the print quality option when printing data from a camera using PictBridge. | |

D

| Main Menu | Submenu | Menu Selections | Options | Descriptions | Page |
|---|---|---|---|---|---|
| 6.Print Reports (MFC-9325CW) | 1.Transmission | 1.View on LCD | — | You can view the Transmission Verification Report for your last 200 outgoing faxes and print the last report. | 82 |
| | | 2.Print Report | — | | |
| | 2.Help List | — | — | Prints the Help List so you can see at-a-glance how to quickly program your machine. | 82 |
| | 3.Tel Index List | 1.Numeric | — | Lists names and numbers stored in the One Touch and Speed Dial memory, in numerical or alphabetical order. | 82 |
| | | 2.Alphabetic | — | | |
| | 4.Fax Journal | — | — | Lists information about your last 200 incoming and outgoing faxes. (TX means Transmit. RX means Receive.) | 82 |
| | 5.User Settings | — | — | Lists your settings. | 82 |
| | 6.Network Config | — | — | Lists your Network settings. | 82 |

| Main Menu | Submenu | Menu Selections | Options | Descriptions | Page |
|---|---|---|---|---|---|
| 5.Network (MFC-9125CN) | 1.TCP/IP | 1.Boot Method | **Auto*** <br> Static <br> RARP <br> BOOTP <br> DHCP | Chooses the BOOT method that best suits your needs. | See *Network User's Guide* on the CD-ROM. |
| | | 2.IP Address | [000-255]. [000-255]. [000-255]. [000-255] | Enter the IP address. | |
| | | 3.Subnet Mask | [000-255]. [000-255]. [000-255]. [000-255] | Enter the Subnet mask. | |
| | | 4.Gateway | [000-255]. [000-255]. [000-255]. [000-255] | Enter the Gateway address. | |
| | | 5.Node Name | BRNXXXXXXXXXXXX | Enter the Node name. | |
| | | 6.WINS Config | **Auto*** <br> Static | Chooses the WINS configuration mode. | |
| | | 7.WINS Server | Primary <br> [000-255]. [000-255]. [000-255]. [000-255] <br> Secondary <br> [000-255]. [000-255]. [000-255]. [000-255] | Specifies the IP address of the primary or secondary WINS server. | |
| | | 8.DNS Server | Primary <br> [000-255]. [000-255]. [000-255]. [000-255] <br> Secondary <br> [000-255]. [000-255]. [000-255]. [000-255] | Specifies the IP address of the primary or secondary DNS server. | |
| | | 9.APIPA | **On*** <br> Off | Automatically allocates the IP address from the link-local address range. | |
| | | 0.IPv6 | On <br> **Off*** | Enable or Disable the IPv6 protocol. If you want to use the IPv6 protocol, visit http://solutions.brother.com/ for more information. | |
| | 2.Ethernet | — | **Auto*** <br> 100B-FD <br> 100B-HD <br> 10B-FD <br> 10B-HD | Chooses the Ethernet link mode. | |

D

| Main Menu | Submenu | Menu Selections | Options | Descriptions | Page |
|---|---|---|---|---|---|
| 5.Network (MFC-9125CN) (Continued) | 3.Scan to FTP | — | **Color 100 dpi***<br>Color 200 dpi<br>Color 300 dpi<br>Color 600 dpi<br>Gray 100 dpi<br>Gray 200 dpi<br>Gray 300 dpi<br>B&W 200 dpi<br>B&W 200x100 dpi | Chooses the file format to send the scanned data via FTP. | See *Network User's Guide* on the CD-ROM. |
| | 4.Scan to Network | — | **Color 100 dpi***<br>Color 200 dpi<br>Color 300 dpi<br>Color 600 dpi<br>Gray 100 dpi<br>Gray 200 dpi<br>Gray 300 dpi<br>B&W 200 dpi<br>B&W 200x100 dpi | You can scan a black and white or color document directly to a CIFS server on your local network or on the internet. | |
| | 5.Time Zone | — | UTCXXX:XX | Sets the time zone for your country. | |
| | 0.Network Reset | 1.Reset | 1.Yes<br>2.No | Restore all network settings to factory default. | |
| | | 2.Exit | — | | |

| Main Menu | Submenu | Menu Selections | | Options | Descriptions | Page |
|---|---|---|---|---|---|---|
| 7.Network (MFC-9325CW) | 1.Wired LAN | 1.TCP/IP | 1.Boot Method | **Auto*** <br> Static <br> RARP <br> BOOTP <br> DHCP | Chooses the BOOT method that best suits your needs. | See *Network User's Guide* on the CD-ROM. |
| | | | 2.IP Address | [000-255]. [000-255]. [000-255]. [000-255] | Enter the IP address. | |
| | | | 3.Subnet Mask | [000-255]. [000-255]. [000-255]. [000-255] | Enter the Subnet mask. | |
| | | | 4.Gateway | [000-255]. [000-255]. [000-255]. [000-255] | Enter the Gateway address. | |
| | | | 5.Node Name | BRNXXXXXXXXXXXX | Enter the Node name. | |
| | | | 6.WINS Config | **Auto*** <br> Static | Chooses the WINS configuration mode. | |
| | | | 7.WINS Server | Primary <br> [000-255]. [000-255]. [000-255]. [000-255] <br> Secondary <br> [000-255]. [000-255]. [000-255]. [000-255] | Specifies the IP address of the primary or secondary WINS server. | |
| | | | 8.DNS Server | Primary <br> [000-255]. [000-255]. [000-255]. [000-255] <br> Secondary <br> [000-255]. [000-255]. [000-255]. [000-255] | Specifies the IP address of the primary or secondary DNS server. | |
| | | | 9.APIPA | **On*** <br> Off | Automatically allocates the IP address from the link-local address range. | |
| | | | 0.IPv6 | On <br> **Off*** | Enable or Disable the IPv6 protocol. If you want to use the IPv6 protocol, visit http://solutions.brother.com/ for more information. | |

D

| Main Menu | Submenu | Menu Selections | | Options | Descriptions | Page |
|---|---|---|---|---|---|---|
| 7.Network (MFC-9325CW) (Continued) | 1.Wired LAN (Continued) | 2.Ethernet | — | **Auto*** 100B-FD 100B-HD 10B-FD 10B-HD | Chooses the Ethernet link mode. | See *Network User's Guide* on the CD-ROM. |
| | | 3.Set to Default | — | 1.Reset 2.Exit | Restore the wired network setting to factory default. | |
| | | 4.Wired Enable | — | **On*** Off | Enable or Disable the Wired LAN manually. | |
| | 2.WLAN | 1.TCP/IP | 1.Boot Method | **Auto*** Static RARP BOOTP DHCP | Chooses the BOOT method that best suits your needs. | |
| | | | 2.IP Address | [000-255]. [000-255]. [000-255]. [000-255] | Enter the IP address. | |
| | | | 3.Subnet Mask | [000-255]. [000-255]. [000-255]. [000-255] | Enter the Subnet mask. | |
| | | | 4.Gateway | [000-255]. [000-255]. [000-255]. [000-255] | Enter the Gateway address. | |
| | | | 5.Node Name | BRWXXXXXXXXXXXX | Enter the Node name. | |
| | | | 6.WINS Config | **Auto*** Static | Chooses the WINS configuration mode. | |
| | | | 7.WINS Server | Primary [000-255]. [000-255]. [000-255]. [000-255] Secondary [000-255]. [000-255]. [000-255]. [000-255] | Specifies the IP address of the primary or secondary WINS server. | |
| | | | 8.DNS Server | Primary [000-255]. [000-255]. [000-255]. [000-255] Secondary [000-255]. [000-255]. [000-255]. [000-255] | Specifies the IP address of the primary or secondary DNS server. | |

| Main Menu | Submenu | Menu Selections | | Options | Descriptions | Page |
|---|---|---|---|---|---|---|
| 7.Network (MFC-9325CW) (Continued) | 2.WLAN (Continued) | 1.TCP/IP (Continued) | 9.APIPA | On*<br>Off | Automatically allocates the IP address from the link-local address range. | See *Network User's Guide* on the CD-ROM. |
| | | | 0.IPv6 | On<br>Off* | Enable or Disable the IPv6 protocol. If you want to use the IPv6 protocol, visit http://solutions.brother.com/ for more information. | |
| | | 2.Setup Wizard | 1.On<br>2.Off | — | You can configure your print server. | |
| | | 3.SES/WPS/AOSS | 1.On<br>2.Off | — | You can easily configure your wireless network settings using the one-button push method. | |
| | | 4.WPS w/PIN Code | 1.On<br>2.Off | — | You can easily configure your wireless network settings using WPS with a PIN code. | |
| | | 5.WLAN Status | 1.Status | Active(11b)<br>Active(11g)<br>Wired LAN Active<br>WLAN OFF<br>AOSS Active<br>Connection Fail | You can see the current wireless network status. | |
| | | | 2.Signal | Strong<br>Medium<br>Weak<br>None | You can see the current wireless network signal strength. | |
| | | | 3.SSID | — | You can see the current SSID. | |
| | | | 4.Comm. Mode | Ad-hoc<br>Infrastructure | You can see the current Communication Mode. | |

D

| Main Menu | Submenu | Menu Selections | | Options | Descriptions | Page |
|---|---|---|---|---|---|---|
| **7.Network** (MFC-9325CW) (Continued) | **2.WLAN** (Continued) | **6.Set to Default** | — | 1.Reset<br>2.Exit | Restore the wireless network settings to factory default. | See *Network User's Guide* on the CD-ROM. |
| | | **7.WLAN Enable** | — | On<br>**Off*** | Enable or disable the wireless LAN manually. | |
| | **3.Scan To FTP** | — | — | **Color 100 dpi***<br>Color 200 dpi<br>Color 300 dpi<br>Color 600 dpi<br>Gray 100 dpi<br>Gray 200 dpi<br>Gray 300 dpi<br>B&W 200 dpi<br>B&W 200x100 dpi | Chooses the file format to send the scanned data via FTP. | |
| | **4.ScanTo Network** | — | — | **Color 100 dpi***<br>Color 200 dpi<br>Color 300 dpi<br>Color 600 dpi<br>Gray 100 dpi<br>Gray 200 dpi<br>Gray 300 dpi<br>B&W 200 dpi<br>B&W 200x100 dpi | You can scan a black and white or color document directly to a CIFS server on your local network or on the internet. | |
| | **5.Time Zone** | — | — | UTCXXX:XX | Sets the time zone for your country. | |
| | **0.Network Reset** | **1.Reset** | — | 1.Yes<br>2.No | Restores all network settings to factory default. | |
| | | **2.Exit** | — | — | | |

| Main Menu | Submenu | Menu Selections | Options | Descriptions | Page |
|---|---|---|---|---|---|
| 8.Machine Info. (MFC-9325CW)<br>6.Machine Info. (MFC-9125CN) | 1.Serial No. | — | — | You can check the serial number of your machine. | 190 |
| | 2.Page Counter | — | Total<br>Fax/List<br>Copy<br>Print | You can check the number of total pages the machine has printed during its life. | 190 |
| | 3.Parts Life | 1.Drum | 1.Black(K)<br>2.Cyan(C)<br>3.Magenta(M)<br>4.Yellow(Y) | You can check the percentage of a machine part's life that remains available. | 191 |
| | | 2.Belt Unit | — | | |
| | | 3.PF Kit | — | | |
| | | 4.Fuser | — | | |
| 0.Initial Setup | 1.Receive Mode | — | **Fax Only*** <br>Fax/Tel<br>External TAD<br>Manual | Chooses the receive mode that best suits your needs. | 46 |
| | 2.Date&Time | — | — | Puts the date and time on the LCD and in headings of faxes you send. | See *Quick Setup Guide.* |
| | 3.Station ID | — | Fax:<br>Tel:<br>Name: | Sets your name and fax number to appear on each page you fax. | |
| | 4.Tone/Pulse (in Canada) | — | **Tone***<br>Pulse | Chooses the dialing mode. | |
| | 4.Dial Tone (in USA)<br>5.Dial Tone (in Canada) | — | Detection<br>**No Detection*** | You can shorten the dial tone detect pause. | 143 |
| | 5.Dial Prefix (in USA)<br>6.Dial Prefix (in Canada) | — | — | Sets a prefix number that will always be added before the fax number every time you dial. | 28 |

D

| Main Menu | Submenu | Menu Selections | Options | Descriptions | Page |
|---|---|---|---|---|---|
| **0.Initial Setup**<br>(Continued) | **6.Reset**<br>(in USA)<br>**7.Reset**<br>(in Canada) | **1.Network** | 1.Reset<br>2.Exit | Restores all network settings to factory default. | 191 |
| | | **2.Address & Fax** | 1.Reset<br>2.Exit | Restores all stored phone numbers and fax settings. | |
| | | **3.All Settings** | 1.Reset<br>2.Exit | Restores all the machine settings to factory default. | |
| | **0.Local Language** | — | (in USA)<br>**English***<br>Español<br>(in Canada)<br>**English***<br>Français | Allows you to change the LCD language for your country. | See *Quick Setup Guide.* |

# Entering text

When setting certain menu selections, such as the Station ID, you will need to type text characters. The dial pad keys have letters printed on them. The keys: **0**, **#** and ∗ do *not* have printed letters because they are used for special characters.

Press the appropriate dial pad key the number of times shown in this reference table to access the character you want.

| Press Key | one time | two times | three times | four times | five times | six times | seven times | eight times | nine times |
|---|---|---|---|---|---|---|---|---|---|
| **1** | @ | . | / | 1 | @ | . | / | 1 | @ |
| **2** | a | b | c | A | B | C | 2 | a | b |
| **3** | d | e | f | D | E | F | 3 | d | e |
| **4** | g | h | i | G | H | I | 4 | g | h |
| **5** | j | k | l | J | K | L | 5 | j | k |
| **6** | m | n | o | M | N | O | 6 | m | n |
| **7** | p | q | r | s | P | Q | R | S | 7 |
| **8** | t | u | v | T | U | V | 8 | t | u |
| **9** | w | x | y | z | W | X | Y | Z | 9 |

For menu selections that do not allow lower case character selection, please use this reference table.

| Press Key | one time | two times | three times | four times | five times |
|---|---|---|---|---|---|
| **2** | A | B | C | 2 | A |
| **3** | D | E | F | 3 | D |
| **4** | G | H | I | 4 | G |
| **5** | J | K | L | 5 | J |
| **6** | M | N | O | 6 | M |
| **7** | P | Q | R | S | 7 |
| **8** | T | U | V | 8 | T |
| **9** | W | X | Y | Z | 9 |

### Inserting spaces

To enter a space in a fax number, press ▶ once between numbers. To enter a space in a name, press ▶ twice between characters.

### Making corrections

If you entered a letter incorrectly and want to change it, press ◀ to move the cursor to the incorrect character, and then press **Clear/Back**.

### Repeating letters

To enter a character on the same key as the previous character, press ▶ to move the cursor right before pressing the key again.

### Special characters and symbols

Press ∗, **#** or **0**, then press ◀ or ▶ to move the cursor to the symbol or character you want. Press **OK** to choose it. The symbols and characters below will appear depending on your menu selection.

| | | |
|---|---|---|
| Press ∗ | for | (space) ! " # $ % & ’ ( ) ∗ + , - . / € |
| Press **#** | for | : ; < = > ? @ [ ] ^ _ \ ~ ` \| { } |
| Press **0** | for | É À È Ê Î Ç Ë Ö 0 |

# E Specifications

## General

| | | |
|---|---|---|
| **Printer Type** | LED | |
| **Print Method** | Electrophotographic LED | |
| **Memory Capacity** | 64 MB | |
| **LCD (liquid crystal display)** | 16 characters × 2 lines | |
| **Power Source** | 110 - 120 V AC 50/60 Hz | |
| **Power Consumption** | Peak: | 1176 W |
| | Copying: | Average 480 W [1] |
| | Sleep: | (MFC-9125CN) Average 11 W |
| | | (MFC-9325CW) Average 12 W |
| | Standby: | Average 75 W |

**Dimensions**

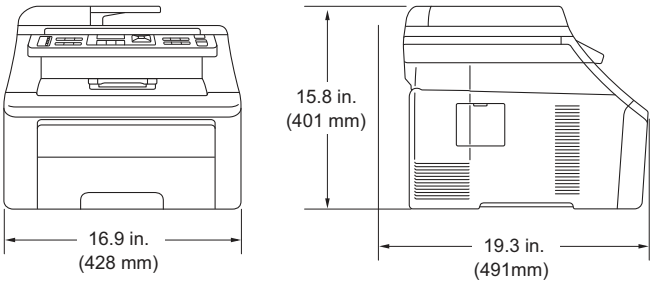


| | | |
|---|---|---|
| **Weight** | Without Drum/Toner Unit: | 44.3 lb (20.1 kg) |
| **Noise level** | Sound power | |
| | Operating (Printing): | LWAd = 6.5 Bell (A) |
| | Standby: | LWAd = 4.8 Bell (A) |
| | Sound pressure | |
| | Operating (Printing): | LPAm = 53 dBA |
| | Standby: | LPAm = 30 dBA |

[1] When making a copy from one sheet

| | | |
|---|---|---|
| **Temperature** | Operating: | 50 °F to 90.5 °F (10 to 32.5 °C) |
| | Storage: | 32 °F to 104 °F (0 to 40 °C) |
| **Humidity** | Operating: | 20 to 80% (without condensation) |
| | Storage: | 10 to 90% (without condensation) |
| **ADF (automatic document feeder)** | Up to 35 pages (Staggered) 20 lb (80 g/$m^2$) | |
| | Recommended Environment for Best Results: | |
| | Temperature: | 68 °F to 86 °F (20 to 30 °C) |
| | Humidity: | 50% to 70% |
| | Paper: | Xerox 4200 (20 lb/Letter) |
| **Paper Tray** | 250 Sheets 20 lb (80 g/$m^2$) | |

# Print media

| | | |
|---|---|---|
| **Paper Input** | **Paper Tray** | |
| | ■ Paper Type: | Thin Paper, Plain Paper or Recycled Paper |
| | ■ Paper Size: | Letter, A4, B5(ISO), A5, A5 (Long Edge), B6(ISO), A6, Executive, Legal and Folio |
| | ■ Paper Weight: | 16 to 28 lb (60 to 105 g/m$^2$) |
| | ■ Maximum Paper Tray Capacity: | Up to 250 sheets of 20 lb (80 g/m$^2$) Plain Paper |
| | **Manual Feed Slot** | |
| | ■ Paper Type: | Thin Paper, Plain Paper, Thick Paper, Thicker Paper, Bond Paper, Recycled Paper, Envelopes or Labels [1] |
| | ■ Paper Size: | Width: 3 to 8.66 in. (76.2 to 220 mm) [2]<br>Length: 4.57 to 16 in. (116.0 to 406.4 mm) [2] |
| | ■ Paper Weight: | 16 to 43 lb (60 to 163 g/m$^2$) |
| **Paper Output** | Up to 100 sheets (face down print delivery to the output paper tray) | |

[1] For labels, we recommend removing printed pages from the output paper tray immediately after they exit the machine to avoid the possibility of smudging.

[2] When using paper that is smaller than 4.1 x 5.8 in. (or A6 size) open the back cover (back output tray).

# Fax

| | | |
|---|---|---|
| **Compatibility** | ITU-T Super Group 3 | |
| **Coding System** | MH/MR/MMR/JBIG/JPEG | |
| **Modem Speed** | Automatic Fallback: | 33,600 bps |
| **Document Size** | ADF Width: | 5.8 to 8.5 in. (147.3 to 215.9 mm) |
| | ADF Height: | 5.8 to 14 in. (147.3 to 356.0 mm) |
| | Scanner Glass Width: | Max. 8.5 in. (215.9 mm) |
| | Scanner Glass Length: | Max. 11.7 in. (297 mm) |
| **Scanning Width** | Max. 8.2 in. (208 mm) | |
| **Printing Width** | Max. 8.2 in. (208 mm) | |
| **Gray Scale** | 8 bit/256 levels | |
| **Polling Types** | Standard, Sequential | |
| **Contrast Control** | Automatic/Light/Dark (manual setting) | |
| **Resolution** | Horizontal: | 203 dot/inch (8 dot/mm) |
| | Vertical | |
| | ■ Standard: | 98 line/in. (3.85 line/mm) |
| | ■ Fine: | 196 line/in. (7.7 line/mm) |
| | ■ Photo: | 196 line/in. (7.7 line/mm) |
| | ■ Superfine: | 392 line/in. (15.4 line/mm) |
| **One Touch Dial** | 8 (4 × 2) | |
| **Speed Dial** | 200 stations | |
| **Groups** | Up to 20 | |
| **Broadcasting** | 258 stations | |
| **Automatic Redial** | Yes,1 time after 5 minutes | |
| **Ring Delay** | 0, 1, 2, 3 or 4 rings | |
| **Communication Source** | Public switched telephone network | |
| **Memory Transmission** | Up to 600 [1]/500 [2] pages [3] | |
| **Out of Paper Reception** | Up to 600 [1]/500 [2] pages [3] | |

[1] ‘Pages’ refers to the ‘Brother Standard Chart No. 1’ (a typical business letter, Standard resolution, JBIG code). Specifications and printed materials are subject to change without prior notice.

[2] ‘Pages’ refers to the ‘ITU-T Test Chart #1’ (a typical business letter, Standard resolution, JBIG code). Specifications and printed materials are subject to change without prior notice.

[3] Black & White only

# Copy

| | | |
|---|---|---|
| **Copy Speed (Monochrome)** | Up to 19 pages/minute (Letter size) [1] | |
| **Copy Speed (Full Color)** | Up to 19 pages/minute (Letter size) [1] | |
| **Color/Monochrome** | Yes/Yes | |
| **Document Size** | ADF Width: | 5.8 to 8.5 in. (148 to 215.9 mm) |
| | ADF Length: | 5.8 to 14 in. (148 to 355.6 mm) |
| | Scanner Glass Width: | Max. 8.5 in. (215.9 mm) |
| | Scanner Glass Length: | Max. 11.7 in. (297 mm) |
| **Copy Width** | Max. 8.26 in. (210 mm) | |
| **Multiple Copies** | Stacks or Sorts up to 99 pages | |
| **Reduce/Enlarge** | 25% to 400% (in increments of 1%) | |
| **Resolution** | Up to 600 × 600 dpi | |
| **First Copy Out Time (Monochrome)** | Less than 19 seconds (from Ready mode) | |
| **First Copy Out Time (Color)** | Less than 24 seconds (from Ready mode) | |

[1] The copy speed may change depending on the type of document you copy.

# Scan

| | | |
|---|---|---|
| **Color/Monochrome** | Yes/Yes | |
| **TWAIN Compliant** | Yes (Windows® XP/Windows® XP Professional x64 Edition/ Windows Vista®/Windows® 7) | |
| | Mac OS X 10.4.11, 10.5.x, 10.6.x [1] | |
| **WIA Compliant** | Yes (Windows® XP/Windows Vista®/Windows® 7) | |
| **Color Depth** | 24 bit color | |
| **Resolution** | Up to 19200 × 19200 dpi (interpolated) [2] | |
| | Up to 1200 × 2400 dpi (optical) (From Scanner Glass) | |
| | Up to 1200 × 600 dpi (optical) (From ADF) | |
| **Document Size** | ADF Width: | 5.8 to 8.5 in. (148.0 to 215.9 mm) |
| | ADF Length: | 5.8 to 14 in. (148.0 to 355.6 mm) |
| | Scanner Glass Width: | Max. 8.5 in. (215.9 mm) |
| | Scanner Glass Length: | Max. 11.7 in. (297 mm) |
| **Scanning Width** | Max. 8.26 in. (210 mm) | |
| **Gray Scale** | 256 levels | |

1 For the latest driver updates for the Mac OS X you are using, visit us at http://solutions.brother.com/.

2 Maximum 1200 × 1200 dpi scanning with the WIA driver in Windows® XP/Windows Vista®/Windows® 7 (resolution up to 19200 × 19200 dpi can be chosen by using the scanner utility)

# Print

| | |
|---|---|
| **Emulations** | PCL6, BR-Script3 (PostScript®3™) |
| **Printer Driver** | Host-Based Driver for Windows® XP/Windows® XP Professional x64 Edition/Windows Vista®/Windows® 7/Windows Server® 2003 [1]/ Windows Server® 2003 x64 Edition [1]/Windows Server® 2008 [1]/ Windows Server® 2008 R2 Edition [1] |
| | BR-Script3 (PPD file) for Windows® XP/Windows® XP Professional x64 Edition/Windows Vista®/Windows® 7/Windows Server® 2003 [1]/ Windows Server® 2003 x64 Edition [1]/Windows Server® 2008 [1]/ Windows Server® 2008 R2 Edition [1] |
| | Macintosh Printer Driver for Mac OS X 10.4.11, 10.5.X, 10.6.X [2] |
| | BR-Script3 (PPD file) for Mac OS X 10.4.11, 10.5.X, 10.6.X [2] |
| **Resolution** | 600 dpi × 600 dpi, 2400 dpi (600 × 2400) |
| **Print Speed (Monochrome)** | Up to 19 pages/minute (Letter size) [3] |
| **Print Speed (Color)** | Up to 19 pages/minute (Letter size) [3] |
| **First Print Out Time (Monochrome)** | Less than 15 seconds (from Ready mode and standard tray) |
| **First Print Out Time (Color)** | Less than 16 seconds (from Ready mode and standard tray) |
| **First Copy Out Time (Monochrome)** | Less than 19 seconds (from Ready mode and standard tray) |
| **First Copy Out Time (Color)** | Less than 24 seconds (from Ready mode and standard tray) |

[1] Print only via network.

[2] For the latest driver updates for the Mac OS X you are using, visit us at http://solutions.brother.com/.

[3] The print speed may change depending on the type of document you print.

# Interfaces

| | |
|---|---|
| **USB** | Use a USB 2.0 interface cable that is no longer than 6 feet (2.0 m). [1] [2] |
| **LAN** [3] | Use an Ethernet UTP cable category 5 or greater. |
| **Wireless LAN** (MFC-9325CW) | Your machine supports IEEE 802.11b/g wireless communication with your wireless LAN using Infrastructure mode or a wireless Peer-to-Peer connection in Ad-hoc mode. |

[1] Your machine has a Hi-Speed USB 2.0 interface. The machine can also be connected to a computer that has a USB 1.1 interface.

[2] Third party USB ports are not supported.

[3] See *Ethernet wired network* on page 233 and the Network User's Guide on the CD-ROM for detailed network specifications.

# PictBridge (MFC-9325CW)

| | |
|---|---|
| **Compatibility** | Supports the Camera & Imaging Products Association PictBridge standard CIPA-001. Visit http://www.cipa.jp/pictbridge/ for more information. |
| **Interface** | USB direct interface. |

# Direct Print feature (MFC-9325CW)

| | |
|---|---|
| **Compatibility** | PDF version 1.7 [1], JPEG, Exif + JPEG, PRN (created by Brother printer driver), TIFF (scanned by all Brother MFC or DCP models), PostScript®3™ (created by Brother BR-Script 3 printer driver), XPS version 1.0. |

[1] PDF data that includes a JBIG2 image file, a JPEG2000 image file or a transparency file is not supported.

# Computer requirements

| Minimum System Requirements and Supported PC Software Functions | | | | | | | | |
|---|---|---|---|---|---|---|---|---|
| **Computer Platform & Operating System Version** | | **Processor Minimum Speed** | **Minimum RAM** | **Recommended RAM** | **Hard Disk Space to install** | | **Supported PC Software Functions** | **Supported PC Interface [3]** |
| | | | | | **For Drivers** | **For Applications** | | |
| Windows® Operating System [1] | Windows® XP Home [2 5]<br>Windows® XP Professional [2 5] | Intel® Pentium® II or equivalent | 128 MB | 256 MB | 150 MB | 310 MB | Printing, PC Fax [4], Scanning | USB, 10/100 Base Tx (Ethernet), Wireless 802.11 b/g [6] |
| | Windows® XP Professional x64 Edition [2] | 64-bit (Intel®64 or AMD64) supported CPU | 256 MB | 512 MB | | | | |
| | Windows Vista® [2] | Intel® Pentium® 4 or equivalent 64-bit (Intel®64 or AMD64) supported CPU | 512 MB | 1 GB | 500 MB | 500 MB | | |
| | Windows® 7 [2] | Intel® Pentium® 4 or equivalent 64-bit (Intel®64 or AMD64) supported CPU | 1 GB (32-bit)<br>2 GB (64-bit) | 1 GB (32-bit)<br>2 GB (64-bit) | 650 MB | 1.2 GB | | |
| | Windows Server® 2003 (print only via network) | Intel® Pentium® III or equivalent | 256 MB | 512 MB | 50 MB | N/A | Printing | 10/100 Base Tx (Ethernet), Wireless 802.11 b/g [6] |
| | Windows Server® 2003 x64 Edition (print only via network) | 64-bit (Intel®64 or AMD64) supported CPU | | | | | | |
| | Windows Server® 2008 (print only via network) | Intel® Pentium® 4 or equivalent 64-bit (Intel®64 or AMD64) supported CPU | 512 MB | 2 GB | | | | |
| | Windows Server® 2008 R2 (print only via network) | 64-bit (Intel®64 or AMD64) supported CPU | | | | | | |
| Macintosh Operating System | Mac OS X 10.4.11 10.5.x | PowerPC® G4/G5 Intel® Processor | 512 MB | 1 GB | 80 MB | 400 MB | Printing, PC Fax Send [4], Scanning | USB, 10/100 Base Tx (Ethernet), Wireless 802.11 b/g [6] |
| | Mac OS X 10.6.x | Intel® Processor | 1 GB | 2 GB | | | | |

1 Internet Explorer® 5.5 or greater.
2 For WIA, 1200x1200 resolution. Brother Scanner Utility enables to enhance up to 19200 x 19200 dpi.
3 Third party USB ports are not supported.
4 PC Fax supports black and white only.
5 PaperPort™ 11SE supports Microsoft® SP2 or higher for Windows® XP.
6 MFC-9325CW only

For the latest driver updates, visit http://solutions.brother.com/.

All trademarks, brand and product names are property of their respective companies.

E

# Consumable items

| | | |
|---|---|---|
| **Toner Cartridge Life** | Starter Toner Cartridge: | Approx. 1,000 pages (Letter) [1] |
| | Standard Toner Cartridge: | |
| | **TN-210BK** (Black): | Approx. 2,200 pages (Letter) [1] |
| | **TN-210C** (Cyan): | Approx. 1,400 pages (Letter) [1] |
| | **TN-210M** (Magenta): | Approx. 1,400 pages (Letter) [1] |
| | **TN-210Y** (Yellow): | Approx. 1,400 pages (Letter) [1] |
| **Drum Unit** | DR-210CL [2], DR-210CL-BK [3], DR-210CL-CMY [4] | Approx. 15,000 pages (Letter) [5] |
| **Belt Unit** | BU-200CL | Approx. 50,000 pages (Letter) |
| **Waste Toner Box** | WT-200CL | Approx. 50,000 pages |

1 Approx. cartridge yield is declared in accordance with ISO/IEC 19798.

2 Contains 4 pc. Drum Set

3 Contains 1 pc. Black Drum Unit

4 Contains 1 pc. Color Drum Unit

5 Drum yield is approximate, and may vary by type of use.

# Ethernet wired network

| | | |
|---|---|---|
| **Network board model name** | NC-6700h | |
| **LAN** | You can connect your machine to a network for Network Printing, Network Scanning, PC Fax and Remote Setup. [1] [2] | |
| **Support for** | Windows® XP, Windows® XP Professional x64 Edition, Windows Vista®, Windows® 7, Windows Server® 2003 [2], Windows Server® 2003 x64 Edition [2], Windows Server® 2008 [2], Windows Server® 2008 R2 Edition [2] | |
| | Mac OS X 10.4.11, 10.5.X, 10.6.X [3] | |
| **Protocols** | IPv4: | ARP, RARP, BOOTP, DHCP, APIPA (Auto IP), WINS/NetBIOS name resolution, DNS Resolver, mDNS, LLMNR responder, LPR/LPD, Custom Raw Port/Port9100, IPP/IPPS, FTP Client and Server, TELNET Server, HTTP/HTTPS Server, SSL/TLS, TFTP Client and Server, SMTP Client, APOP, POP before SMTP, SMTP-AUTH, SNMPv1/v2c/v3, ICMP, LLTD responder, Web Services Print, CIFS Client, SNTP |
| | IPv6: | (Turned off as default) NDP, RA, DNS resolver, mDNS, LLMNR responder, LPR/LPD, Custom Raw Port/Port9100, IPP/IPPS, FTP Client and Server, TELNET Server, HTTP/HTTPS server, SSL/TLS, TFTP Client and Server, SMTP Client, APOP, POP before SMTP, SMTP-AUTH, SNMPv1/v2c/v3, ICMPv6, LLTD responder, Web Services Print, CIFS Client, SNTP |
| **Network type** | Ethernet 10/100 BASE-TX Auto Negotiation (Wired LAN) | |

| | |
|---|---|
| **Management utilities** [4] | BRAdmin Light for Windows® XP, Windows® XP Professional x64 Edition, Windows Vista®, Windows® 7, Windows Server® 2003, Windows Server® 2003 x64 Edition, Windows Server® 2008, Windows Server® 2008 R2 Edition and Mac OS X 10.4.11, 10.5.X, 10.6.X [3]<br>BRAdmin Professional for Windows® XP, Windows® XP Professional x64 Edition, Windows Vista®, Windows® 7, Windows Server® 2003, Windows Server® 2003 x64 Edition, Windows Server® 2008 and Windows Server® 2008 R2 Edition<br>Web BRAdmin for Windows® XP, Windows® XP Professional x64 Edition, Windows Vista®, Windows® 7, Windows Server® 2003, Windows Server® 2003 x64 Edition, Windows Server® 2008 and Windows Server® 2008 R2 Edition<br>Client computers with a web browser supporting Java. |

1 PC Fax Send for Mac

2 Print only via network.

3 For the latest driver updates for the Mac OS X you are using, visit us at http://solutions.brother.com/.

4 BRAdmin Professional and Web BRAdmin are available as a download from http://solutions.brother.com/.

# Ethernet wireless network (MFC-9325CW)

| | | |
|---|---|---|
| **Network board model name** | NC-7500W | |
| **LAN** | You can connect your machine to a network for Network Printing, Network Scanning, PC Fax and Remote Setup [1 2]. | |
| **Support for** | Windows® XP, Windows® XP Professional x64 Edition, Windows Vista®, Windows® 7, Windows Server® 2003, Windows Server® 2003 x64 Edition, Windows Server® 2008, Windows Server® 2008 x64 Edition and Windows Server® 2008 R2 Edition | |
| | Mac OS X 10.4.11, 10.5.X, 10.6.X [3] | |
| **Protocols** | IPv4: | ARP, RARP, BOOTP, DHCP, APIPA (Auto IP), WINS, NetBIOS name resolution, DNS Resolver, mDNS, LLMNR responder, LPR/LPD, Custom Raw Port/Port9100, IPP/IPPS, FTP Client and Server, TELNET Server, HTTP/HTTPS Server, SSL/TLS, TFTP Client and Server, SMTP Client, APOP, POP before SMTP, SMTP AUTH, SNMPv1/v2c/v3, ICMP, LLTD responder, Web Services Print, CIFS Client, SNTP |
| | IPv6: | (Turned off as default) NDP, RA, DNS resolver, mDNS, LLMNR responder, LPR/LPD, Custom Raw Port/Port9100, IPP/IPPS, FTP Client and Server, TELNET Server, HTTP/HTTPS server, SSL/TLS, TFTP Client and Server, SMTP Client, APOP, POP before SMTP, SMTP AUTH, SNMPv1/v2c/v3, ICMPv6, LLTD responder, Web Services Print, CIFS Client, SNTP |
| **Network type** | IEEE 802.11 b/g (Wireless LAN) | |

E

| | |
|---|---|
| **Management utilities** [4] | BRAdmin Light for Windows® XP, Windows® XP Professional x64 Edition, Windows Vista®, Windows® 7, Windows Server® 2003, Windows Server® 2003 x64 Edition, Windows Server® 2008, Windows Server® 2008 R2 Edition and Mac OS X 10.4.11, 10.5.X, 10.6.X [3]<br>BRAdmin Professional for Windows® XP, Windows® XP Professional x64 Edition, Windows Vista®, Windows® 7, Windows Server® 2003, Windows Server® 2003 x64 Edition, Windows Server® 2008 and Windows Server® 2008 R2 Edition<br>Web BRAdmin for Windows® XP, Windows® XP Professional x64 Edition, Windows Vista®, Windows® 7, Windows Server® 2003, Windows Server® 2003 x64 Edition, Windows Server® 2008 and Windows Server® 2008 R2 Edition<br>Client computers with a web browser supporting Java. |

1 PC Fax Send for Mac

2 Only printing for Windows Server® 2003 and Windows Server® 2008

3 For the latest driver updates for the Mac OS X you are using, visit us at http://solutions.brother.com/.

4 BRAdmin Professional and Web BRAdmin are available as a download from http://solutions.brother.com/.

# Authentication and encryption for wireless users only

## Authentication method

The Brother machine supports the following methods:

- Open system

  Wireless devices are allowed to access the network without any authentication.

- Shared key

  A secret pre-determined key is shared by all devices that will access the wireless network. The Brother machine uses the WEP keys as the pre-determined key.

- WPA-PSK/WPA2-PSK

  Enables a Wi-Fi Protected Access Pre-Shared Key (WPA-PSK/WPA2-PSK), which enables the Brother wireless machine to associate with access points using TKIP for WPA-PSK or AES for WPA-PSK and WPA2-PSK (WPA-Personal).

- LEAP

  Cisco LEAP (Light Extensible Authentication Protocol) has been developed by Cisco Systems, Inc. and enables the Brother wireless product to associate with access points using CKIP encryptions.

- EAP-FAST

  EAP-FAST (Extensible Authentication Protocol - Flexible Authentication via Secured Tunnel) has been developed by Cisco Systems, Inc. which uses user ID and password for authentication, and symmetric key algorithms to achieve a tunneled authentication process.

  The Brother machine supports the following inner authentications:

  - EAP-FAST/NONE

    MS-CHAPv2 is used for Provisioning, and the method of EAP-FAST corresponding to second phase authentication method.

  - EAP-FAST/MS-CHAPv2

    Method of EAP-FAST corresponding to CCXv4 that uses MS-CHAPv2 for inner method.

  - EAP-FAST/GTC

    Method of EAP-FAST corresponding to CCXv4 that uses GTC for inner method.

## Encryption methods

Encryption is used to secure the data that is sent over the wireless network. The Brother machine supports the following encryption methods:

- WEP

  By using WEP (Wired Equivalent Privacy), the data is transmitted and received with a secure key.

- TKIP

  TKIP (Temporal Key Integrity Protocol) provides per-packet key mixing a message integrity check and re-keying mechanism.

- AES

  AES (Advanced Encryption Standard) is Wi-Fi authorized strong encryption standard.

- CKIP

  The original Key Integrity Protocol for LEAP by Cisco Systems, Inc.

## Network key

There are some rules for each security method:

- Open system/Shared key with WEP

  This key is a 64-bit or 128-bit value that must be entered in an ASCII or hexadecimal format.

  - 64 (40) bit ASCII:

    Uses 5 text characters. e.g.“WSLAN” (this is case sensitive).

  - 64 (40) bit hexadecimal:

    Uses 10 digits of hexadecimal data. e.g.“71f2234aba”.

  - 128 (104) bit ASCII:

    Uses 13 text characters. e.g.“Wirelesscomms” (this is case sensitive).

  - 128 (104) bit hexadecimal:

    Uses 26 digits of hexadecimal data. e.g.“71f2234ab56cd709e5412aa2ba”.

- WPA-PSK/WPA2-PSK and TKIP or AES

  Uses a Pre-Shared Key (PSK) that is 8 or more characters in length, up to a maximum of 63 characters.

- LEAP

  Uses User ID and Password.

  - User ID: less than 64 characters in length.
  - Password: less than 32 characters in length.

- EAP-FAST

  Uses User ID and Password.

  - User ID: less than 64 characters in length.
  - Password: less than 32 characters in length.

## Wireless one-push configuration

If your wireless access point supports either Wi-Fi Protected Setup (PBC [1]) or AOSS™, you can configure the machine easily without a computer. By pushing a button on the wireless LAN router / access point and using the menu on the machine, you can set up the wireless network and security settings. See the User's Guide for your wireless LAN router / access point for instructions on how to access one-push mode.

[1] Push Button Configuration

**Note**

Routers or access points that support Wi-Fi Protected Setup or AOSS™ have the symbols shown below.

# F Glossary

This is a comprehensive list of features and terms that appear in Brother manuals. Availability of these features depends on the model you purchased.

**ADF (automatic document feeder)**

The document can be placed in the ADF and scanned one page at a time automatically.

**Address Book (▼)**

A pre-programmed number for easy dialing. You must press ▼ (**Address Book**), then enter the three-digit Speed Dial location and press **Start** to begin the dialing process.

**Auto Reduction**

Reduces the size of incoming faxes.

**Automatic fax transmission**

Sending a fax without picking up the handset of the external telephone or pressing **Hook**.

**Automatic Redial**

A feature that enables your machine to redial the last fax number after five minutes if the fax did not go through because the line was busy.

**Backup Print**

Your machine prints a copy of every fax that is received and stored in memory. This is a safety feature so you will not lose messages during a power failure.

**Batch Transmission**

As a cost saving feature, all delayed faxes to the same fax number will be sent as one transmission.

**Beeper Volume**

Volume setting for the beep when you press a key or make an error.

**Broadcasting**

The ability to send the same fax message to more than one location.

**Cancel Job**

Cancels a programmed print job and clears the machine's memory.

**CNG tones**

The special tones (beeps) sent by fax machines during automatic transmission to tell the receiving machine that a fax machine is calling.

**Coding method**

Method of coding the information contained in the document. All fax machines must use a minimum standard of Modified Huffman (MH). Your machine is capable of greater compression methods, Modified Read (MR), Modified Modified Read (MMR) and JBIG, if the receiving machine has the same capability.

**Communication error (or Comm. Error)**

An error during fax sending or receiving, usually caused by line noise or static.

**Compatibility group**

The ability of one fax unit to communicate with another. Compatibility is assured between ITU-T Groups.

**Contrast**

Setting to compensate for dark or light documents, by making faxes or copies of dark documents lighter and light documents darker.

**Delayed Fax**

Sends your fax at a specified later time that day.

**Distinctive Ring**

A subscriber service purchased from the telephone company that gives you another telephone number on an existing telephone line. The Brother machine uses the new number to simulate a dedicated fax line.

**Dual Access**

Your machine can scan outgoing faxes or scheduled jobs into memory at the same time it is sending a fax or receiving or printing an incoming fax.

**Easy Receive**

Enables your machine to respond to CNG tones if you interrupt a fax call by answering it.

**ECM (Error Correction Mode)**

Detects errors during fax transmission and resends the pages of the fax that had an error.

**Extension telephone**

A telephone on the fax number that is plugged into a separate telephone wall jack.

**External telephone**

A telephone that is plugged into the EXT jack of your machine.

**F/T Ring Time**

The length of time that the Brother machine pseudo/double-rings (when the Receive Mode setting is Fax/Tel) to notify you to pick up a voice call that it answered.

**Fax Forwarding**

Sends a fax received into the memory to another pre-programmed fax number.

**Fax Journal**

Lists information about the last 200 incoming and outgoing faxes. TX means Transmit. RX means Receive.

**Fax Receive Code**

Press this code (∗51) when you answer a fax call on an extension or external telephone.

**Fax Storage**

You can store faxes in the memory.

**Fax tones**

The signals sent by sending and receiving fax machines while communicating information.

**Fax/Tel**

You can receive faxes and telephone calls. Do not use this mode if you are using a telephone answering device (TAD).

**Fine resolution**

Resolution is 203 × 196 dpi. It is used for small print and graphs.

**Gray Scale**

The shades of gray available for copying and faxing photographs.

**Group number**

A combination of One Touch and Speed Dial numbers that are stored on a One Touch key or in a Speed Dial location for Broadcasting.

**Help List**

A printout of the complete Menu table that you can use to program your machine when you do not have the User's Guide with you.

**Journal Period**

The pre-programmed time period between automatically printed Fax Journal Reports. You can print the Fax Journal on demand without interrupting the cycle.

**LCD (liquid crystal display)**

The display screen on the machine that shows interactive messages during On-Screen Programming and shows the date and time when the machine is idle.

**Manual fax**

When you lift the handset of your external telephone or press **Hook** so you can hear the receiving fax machine answer before you press **Start** to begin transmission.

**Menu mode**

Programming mode for changing your machine's settings.

**OCR (optical character recognition)**

The bundled ScanSoft™ PaperPort™ 11SE with OCR or Presto! PageManager software application converts an image of text to text you can edit.

**One Touch**

Keys on the machine's control panel where you can store numbers for easy dialing. You can store a second number on each key if you press **Shift** and the One Touch key together.

**Out of Paper Reception**

Receives faxes into the machine's memory when the machine is out of paper.

**Overseas Mode**

Makes temporary changes to the fax tones to accommodate noise and static on overseas telephone lines.

**Paging**

This feature enables your machine to call your pager when a fax is received into its memory.

**Pause**

Allows you to place a 3.5 second delay in the dialing sequence while you are dialing using the dial pad or while you are storing One Touch and Speed Dial numbers. Press **Redial/Pause** as many times as needed for longer pauses.

**Polling**

The process of a fax machine calling another fax machine to retrieve waiting fax messages.

**Pulse (Canada only)**

A form of rotary dialing on a telephone line.

**Real Time Transmission**

When memory is full, you can send faxes in real time.

**Remaining Jobs**

You can check which programmed fax jobs are waiting in the memory and cancel the jobs individually.

**Remote Access Code**

Your own four-digit code (– – –*) that allows you to call and access your machine from a remote location.

**Remote Retrieval Access**

The ability to access your machine remotely from a touch tone telephone.

**Resolution**

The number of vertical and horizontal lines per inch.

**Ring Delay**

The number of rings before the machine answers in `Fax Only` and `Fax/Tel` modes.

**Ring Volume**

Volume setting for the machine's ring.

**Scanning**

The process of sending an electronic image of a paper document into your computer.

**Search**

An electronic, alphabetical listing of stored One Touch, Speed Dial and Group numbers.

**Station ID**

The stored information that appears on the top of faxed pages. It includes the sender's name and fax number.

**TAD (telephone answering device)**

You can connect an external device or answering machine to the EXT. jack of your machine.

**Telephone Answer Code (Fax/Tel mode only)**

When the machine answers a voice call, it pseudo/double-rings. You can pick up at an extension telephone by pressing this code (**#51**).

**Tel Index List**

A listing of names and numbers stored in One Touch and Speed Dial memory, in numerical order.

**Temporary settings**

You can choose certain options for each fax transmission and copy without changing the default settings.

**Tone**

A form of dialing on the telephone line used for Touch Tone telephones.

**Transmission**

The process of sending faxes over the telephone lines from your machine to the receiving fax machine.

**Transmission Verification Report**

A report for each transmission, that shows its date, time and number.

**User Settings List**

A printed report that shows the current settings of the machine.

# G Index

## A


Accessories and supplies ..... ii
Address book ..... 8, 63, 64
ADF (automatic document feeder)
  faxing .....38
  using .....23
Answering machine (TAD)
  connecting .....58
Apple Macintosh
  See Software User's Guide on the CD-ROM.
Automatic
  fax receive .....48
    easy receive .....50
  fax redial .....64


## B


Belt unit
  replacing .....181
Broadcasting .....39
  canceling .....40
  setting up groups for .....69
Brother
  accessories and supplies ..... ii
  Brother numbers .....i
  Customer Service .....i
  FAQs (frequently asked questions) .....i
  product support .....i
  service centers .....i
  warranties ..... iii, iv, vi


## C


Canceling
  broadcast in process .....40
  fax jobs in memory .....45
  fax storage .....73
  jobs awaiting redial .....45
  remote fax options .....75
Cleaning
  corona wires .....160
  drum unit .....162
  LED head .....159
  scanner .....158
Connecting
  external TAD (answering machine) ..... 57
  external telephone ..... 61
  two-line external TAD or telephone ..... 59
Consumable items .....169, 170
Control panel overview ..... 6
ControlCenter2 (for Macintosh)
  See Software User's Guide on the CD-ROM.
ControlCenter3 (for Windows®)
  See Software User's Guide on the CD-ROM.
Copy
  contrast .....86, 89
  Enlarge/Reduce key ..... 87
  enter copy mode ..... 86
  keys .....8, 87
  multiple ..... 86
  N in 1 (page layout) ..... 91
  Options key ..... 88
  out of memory ..... 92
  quality ..... 89
  single ..... 86
  sort (ADF only) ..... 89
  temporary settings ..... 87
  using ADF .....89, 91
  using scanner glass .....91, 92
Cordless telephone (non-Brother) ..... 61
Corona wires ..... 161
Cover page ..... 41
  custom comments ..... 41
  for all faxes ..... 42
  for next fax only ..... 41
  printed form ..... 42
Custom Ringing ..... 54

## D


Data Ident-A-Call .....54
Delayed batch transmission .....44
Dialing
  a pause .....64
  access codes and credit card numbers 71
  automatic fax redial .....64
  dial prefix .....28
  groups (broadcasting) .....39
  manual .....63
  one touch .....63
  restricting dialing .....35
  speed dial .....63
  using the Search key .....64
Direct print .....99
  Direct key .....100
  specification .....230
Distinctive ring .....54
  choosing ring pattern .....55
  setting ring pattern .....55
  turning off .....56
Document
  how to load ..... 23, 24
  jam .....151
Drum unit
  checking (remaining life) .....191
  cleaning ..... 160, 162
Dual access .....43


## E


EAP-FAST .....237
Enlarge/Reduce key .....87
Envelopes .....14, 18, 19, 21
  Labels .....14
Equalization .....143
Error messages on LCD .....144
  Comm. Error .....145
  Init Unable XX .....146
  No Paper .....146
  Out of Memory .....147
  Print Unable XX .....147
  Scan Unable XX .....149
Extension telephone, using .....61
External telephone, connecting .....61


## F


Fax codes
  changing .....62, 76
  fax receive code ..... 61
  remote access code ..... 76
  telephone answer code ..... 61
Fax forwarding
  changing remotely .....77, 78
  programming a number ..... 72
Fax storage ..... 73
  printing from memory ..... 52
  turning off ..... 75
  turning on ..... 73
Fax, stand-alone
  receiving ..... 46
    at end of conversation ..... 51
    easy receive ..... 50
    fax forwarding ..... 78
    fax receive stamp ..... 51
    from extension telephone ..... 61
    into memory (fax storage) ..... 73
    paging ..... 73
    polling receive ..... 79
    reducing to fit on paper ..... 51
    retrieving from a remote site .....77, 78
    ring delay, setting ..... 49
    sequential polling ..... 79
    telephone line interference ..... 143
  sending ..... 38
    at end of conversation ..... 45
    broadcasting ..... 39
    canceling from memory ..... 45
    contrast ..... 42
    delayed batch ..... 44
    delayed fax ..... 44
    from ADF ..... 38
    from memory (dual access) ..... 43
    from scanner glass ..... 38
    manual ..... 45
    overseas ..... 44
    polled transmit ..... 80
    real time transmission ..... 43
    resolution ..... 42
    telephone line interference ..... 143
Fax/Tel mode
  answering at extension telephones ..... 61
  easy receive ..... 50
  F/T ring time (double-ring) ..... 49


G

fax receive code .....61
receiving faxes .....61
ring delay .....49
telephone answer code .....61
Folio ..... 19, 25

## G

Gray scale ..... 224, 226
Groups for broadcasting .....69

## H

HELP .....83
Help List .....83
LCD messages .....197
Menu Table ..... 197, 199
using menu keys .....197
Hook key ..... 8, 61

## I

Ident-A-Call .....54
Ident-A-Ring .....54

## J

Jacks
convert to RJ11 jack
triplex adapter .....59
EXT
external telephone .....61
TAD (answering machine) .....57
Jams
document .....151
paper .....152

## L

Labels ..... 13, 14, 18, 19, 22
LCD (liquid crystal display) ..... 8, 197
contrast .....28
Help List .....82

## M

Machine information
checking remaining life of parts ..... 191
page counts ..... 190
status LED ..... 10
Macintosh
See Software User's Guide on the CD-ROM.
Maintenance, routine ..... 157
checking the remaining life of parts .... 191
replacing
belt unit ..... 181
drum units ..... 176
toner cartridge ..... 171
waste toner box ..... 185
Manual
dialing ..... 63
receive .....46, 48
transmission ..... 45
Memory
adding DIMM (option) ..... 126
installing ..... 126
storage ..... 197
Menu Table .....197, 199
using menu keys ..... 197
Mode, entering
copy ..... 86
fax ..... 38
scan ..... 9
Multi-line connections (PBX) ..... 60

## N

N in 1 (page layout) ..... 91
Network
faxing
See Software User's Guide on the CD-ROM.
printing
See Network User's Guide on the CD-ROM.
scanning
See Software User's Guide on the CD-ROM.

## O


One touch
  changing .....68
  setting up .....65
  using .....63
Out of Memory message ... 45, 92, 98, 103, 147


## P


Packing and shipping the machine .....192
Page layout (N in 1) .....91
Paging .....73
  programming your cell number .....73
  programming your pager number .....72
Paper ..... 18, 223
  how to load .....11
    in manual feed slot .....13
    in paper tray .....11
  jam .....152
  recommended ..... 18, 19
  size ..... 18, 25
  size of document ..... 225, 226
  tray capacity .....19
  type ..... 18, 25
PaperPort™ 11SE with OCR
  See Software User's Guide on the CD-ROM and Help in the PaperPort™ 11SE application to access How-to-Guides
PC Fax
  See Software User's Guide on the CD-ROM.
Personalized Ring .....54
PictBridge
  DPOF printing .....96
  specification .....229
Polling
  polled transmit .....80
  polling receive .....79
  sequential polling .....79
Power failure .....197
Print
  difficulties ..... 128, 132
  drivers .....227
  fax from memory .....52
  paper jams .....152
  quality ..... 134, 136
  reports .....82
  resolution ..... 227
  specifications ..... 227
Printing
  See Software User's Guide on the CD-ROM.
Programming your machine ..... 197


## Q


Quality
  copying .....88, 89
  printing .....134, 136
Quick dial ..... 65
  access codes and credit card numbers 71
  broadcasting ..... 39
    using groups ..... 39
  group dial
    changing ..... 68
    setting up groups for broadcasting .... 69
  one touch dial
    changing ..... 68
    custom scan profile ..... 65
    setting up ..... 65
    using ..... 63
  search ..... 64
  speed dial
    changing ..... 68
    custom scan profile ..... 66
    setting up ..... 66
    using ..... 63


G

## R


Redial/Pause key ..... 64, 71
Reducing
  copies .....87
  incoming faxes .....51
Remote retrieval .....76
  access code .....76
  commands .....78
  getting your faxes .....77
Remote setup
  See Software User's Guide on the CD-ROM.
Replacing
  belt unit .....181
  drum units .....176
  toner cartridge .....171
  waste toner box .....185
Reports ..... 81, 82
  Fax Journal .....82
    journal period .....82
  Help List .....82
  how to print .....83
  Network Configuration .....82
  Tel Index List .....82
  Transmission Verification .....81
  User Settings .....82
Resolution
  copy .....225
  fax (standard, fine, superfine, photo) .. 42, 224
  print .....227
  scan .....226
  setting for next fax .....42
Resolution key ..... 8, 42
Restricted users .....31
Ring delay, setting .....49
RingMaster .....54


## S


Safety instructions ..... 117
Scanner glass
  faxing ..... 38
  using ..... 24
Scanning
  See Software User's Guide on the CD-ROM.
Secure key ..... 8
Security
  Memory Security ..... 32
  restricting dialing ..... 35
  Secure function lock
    administrator password ..... 29
    Public user mode ..... 30
    restricted users ..... 31
  Setting lock ..... 34
Serial number
  how to find .....See inside front cover
Service centers .....i
Shipping the machine ..... 192
SimpleBiz Fax & Alternate Number Ringing ... 54
Sleep time ..... 27
Smart Ring ..... 54
Sort ..... 89
Speed dial
  changing ..... 68
  setting up ..... 66
  using ..... 63
Status LED ..... 10

## T


TAD (telephone answering device), external ..... 46, 48, 59
  connecting ..... 57, 58
  recording OGM ..... 58
  with two-line jack ..... 59
Teen Ring ..... 54
Telephone line
  connections ..... 58
  coverting wall outlets ..... 59
  difficulties ..... 129
  interference ..... 143
  multi-line (PBX) ..... 60
  roll over lines ..... 59
  two-line telephone system ..... 59
Temporary copy settings ..... 87
Text, entering ..... 219
Toner Save ..... 27
Troubleshooting ..... 128
  document jam ..... 151
  error messages on LCD ..... 144
  if you are having difficulty
    copy quality ..... 132
    incoming calls ..... 131
    network ..... 134
    paper handling ..... 133
    print quality ..... 134, 136
    printing ..... 128, 132
    receiving faxes ..... 129
    scanning ..... 133
    sending faxes ..... 131
    software ..... 133
    telephone line ..... 143
  maintenance messages on LCD ..... 144
  paper jam ..... 152
Two-line telephone system ..... 59


## V


Voice Mail ..... 53
VoIP
  interference/VoIP ..... 143
Volume, setting
  beeper ..... 26
  ring ..... 26
  speaker ..... 26


## W


Warranties
  Canada ..... vi
  Notice-Disclaimer ..... iii
  USA ..... iv
Waste toner box
  replacing ..... 185
Windows®
  See Software User's Guide on the CD-ROM.
Wireless Network
  See Quick Setup Guide and Network User's Guide on the CD-ROM.
World Wide Web ..... i


G

# EQUIPMENT ATTACHMENT LIMITATIONS
# (Canada only)

**NOTICE**

This product meets the applicable Industry Canada technical specifications.

**NOTICE**

The Ringer Equivalence Number is an indication of the maximum number of devices allowed to be connected to a telephone interface. The termination on an interface may consist of any combination of devices subject only to the requirement that the sum of the RENs of all the devices does not exceed five.

Brother International Corporation
100 Somerset Corporate Boulevard
P.O. Box 6911
Bridgewater, NJ 08807-0911 USA

Brother International Corporation (Canada) Ltd.
1 rue Hôtel de Ville,
Dollard-des-Ormeaux, QC, Canada H9B 3H6

**Visit us on the World Wide Web**
**http://www.brother.com/**

These machines are made for use in the USA and Canada only. We cannot recommend using them overseas because it may violate the Telecommunications Regulations of that country and the power requirements of your machine may not be compatible with the power available in foreign countries. **Using USA or Canada models overseas is at your own risk and may void your warranty**.