Basic User's Guide

MFC-L8600CDW
MFC-L8850CDW
MFC-L9550CDW

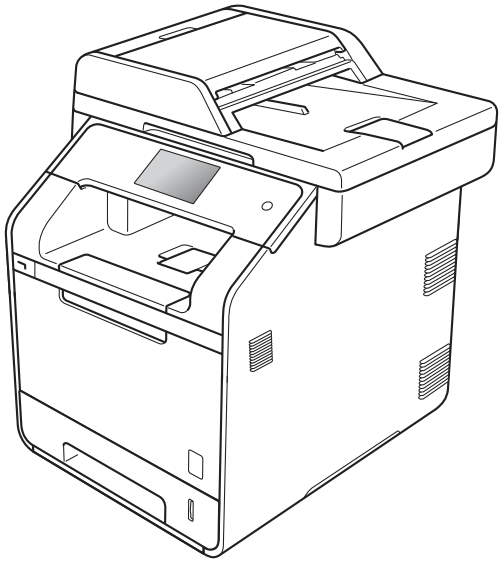

Not all models are available in all countries.

In USA: Visit the Brother Solutions Center at http://solutions.brother.com/ and click **Manuals** on your model's page to download other manuals.

Version A

USA/CAN

If you must contact Customer Service

Complete the following information for future reference:

Model Number: MFC-L8600CDW /
MFC-L8850CDW / MFC-L9550CDW
(Circle your model number)

Serial Number: [1]_____

Date of Purchase:_____

Place of Purchase:_____

[1] The serial number is on the back of the unit. Retain this User's Guide with your sales receipt as a permanent record of your purchase, in the event of theft, fire or warranty service.

Register your product on-line at

http://www.brother.com/registration/

By registering your product with Brother, you will be recorded as the original owner of the product. Your registration with Brother:

- may serve as confirmation of the purchase date of your product should you lose your receipt;
- may support an insurance claim by you in the event of product loss covered by insurance; and,
- will help us notify you of enhancements to your product and special offers.

The most convenient and efficient way to register your new product is online at http://www.brother.com/registration/.

© 2014 Brother Industries, Ltd. All rights reserved.

Brother numbers

IMPORTANT

For technical help, you must call the country where you bought the machine. Calls must be made ***from within*** that country.

Register your product

By registering your product with Brother International Corporation, you will be recorded as the original owner of the product. Your registration with Brother:

- may serve as confirmation of the purchase date of your product should you lose your receipt;
- may support an insurance claim by you in the event of product loss covered by insurance; and,
- will help us notify you of enhancements to your product and special offers.

Complete and fax the Brother Warranty Registration and Test Sheet or, for your convenience and most efficient way to register your new product, register on-line at

http://www.brother.com/registration/

FAQs (frequently asked questions)

The Brother Solutions Center is our one-stop resource for all your Fax Machine/Multi-Function Center needs. You can download the latest software and utilities and read FAQs and troubleshooting tips to learn how to get the most from your Brother product.

http://solutions.brother.com/

NOTE

You can check here for Brother driver updates.

To keep your machine's performance up to date, check here for the latest firmware upgrade.

For Customer Service

In USA:	http://www.brother-usa.com/support (Self-Service/Email/Chat)
	1-877-BROTHER (1-877-276-8437)
	1-901-379-1215 (assistance via fax)
	1-877-268-9575 (test your fax sending and fax receiving operations)
In Canada:	http://www.brother.ca/support (Self-Service Videos/Email/Chat/Facebook/Twitter Help)

Service Center Locator (USA only)

For the location of a Brother authorized service center, call 1-877-BROTHER (1-877-276-8437) or visit http://www.brother-usa.com/service/.

Service Center Locations (Canada only)

For the location of a Brother authorized service center, visit http://www.brother.ca/support.

Ordering supplies

For best quality results use only genuine Brother accessories, which are available at most Brother retailers. If you cannot find the supply you need and you have a Visa, MasterCard, Discover, or American Express credit card, or PayPal account, you can order directly from Brother. Visit us online for a complete selection of the Brother accessories and supplies that are available for purchase.

NOTE

In Canada, only Visa and MasterCard are accepted.

In USA:	1-877-552-MALL (1-877-552-6255)
	1-800-947-1445 (assistance via fax)
	http://www.brothermall.com/
In Canada:	**http://www.brother.ca/**

Order information

Description	Item
Toner Cartridge <Black>	TN-331BK (Approx. 2,500 pages) [1 2 3] TN-336BK (Approx. 4,000 pages) [1 2 4] TN-339BK (Approx. 6,000 pages) [1 2 5]
Toner Cartridge <Cyan>	TN-331C (Approx. 1,500 pages) [1 2 3] TN-336C (Approx. 3500 pages) [1 2 4] TN-339C (Approx. 6,000 pages) [1 2 5]
Toner Cartridge <Magenta>	TN-331M (Approx. 1,500 pages) [1 2 3] TN-336M (Approx. 3,500 pages) [1 2 4] TN-339M (Approx. 6,000 pages) [1 2 5]
Toner Cartridge <Yellow>	TN-331Y (Approx. 1,500 pages) [1 2 3] TN-336Y (Approx. 3,500 pages) [1 2 4] TN-339Y (Approx. 6,000 pages) [1 2 5]
Drum Unit	DR-331CL (Approx. 25,000 pages) [7 8]
Belt Unit	BU-320CL (Approx. 50,000 pages [1 6])
Waste Toner Box	WT-320CL (Approx. 50,000 pages) [1]
Paper Tray #2 (Option)	LT-320CL (MFC-L8600CDW and MFC-L8850CDW) LT-325CL (MFC-L9550CDW)
Telephone Line Cord	LG3077001
Basic User's Guide	LEN137001 (English for USA and Canada)
	LEN137002 (French for Canada)
Quick Setup Guide	LEN138001 (English for USA and Canada)
	LEN138002 (French for Canada)

1 Letter or A4 size single-sided pages.

2 Approximate cartridge yield is declared in accordance with ISO/IEC 19798.

3 Standard toner cartridge

4 High yield toner cartridge

5 Super High yield toner cartridge

6 5 pages per job

7 1 page per job

8 Drum life is approximate and may vary by type of use.

Notice - Disclaimer of Warranties (USA and Canada)

BROTHER'S LICENSOR(S), AND THEIR DIRECTORS, OFFICERS, EMPLOYEES OR AGENTS (COLLECTIVELY BROTHER'S LICENSOR) MAKE NO WARRANTIES, EXPRESS OR IMPLIED, INCLUDING WITHOUT LIMITATION THE IMPLIED WARRANTIES OF MERCHANTABILITY AND FITNESS FOR A PARTICULAR PURPOSE, REGARDING THE SOFTWARE. BROTHER'S LICENSOR(S) DOES NOT WARRANT, GUARANTEE OR MAKE ANY REPRESENTATIONS REGARDING THE USE OR THE RESULTS OF THE USE OF THE SOFTWARE IN TERMS OF ITS CORRECTNESS, ACCURACY, RELIABILITY, CURRENTNESS OR OTHERWISE. THE ENTIRE RISK AS TO THE RESULTS AND PERFORMANCE OF THE SOFTWARE IS ASSUMED BY YOU. THE EXCLUSION OF IMPLIED WARRANTIES IS NOT PERMITTED BY SOME STATES IN THE USA AND SOME PROVINCES IN CANADA. THE ABOVE EXCLUSION MAY NOT APPLY TO YOU.

IN NO EVENT WILL BROTHER'S LICENSOR(S) BE LIABLE TO YOU FOR ANY CONSEQUENTIAL, INCIDENTAL OR INDIRECT DAMAGES (INCLUDING DAMAGES FOR LOSS OF BUSINESS PROFITS, BUSINESS INTERRUPTION, LOSS OF BUSINESS INFORMATION, AND THE LIKE) ARISING OUT OF THE USE OR INABILITY TO USE THE SOFTWARE EVEN IF BROTHER'S LICENSOR HAS BEEN ADVISED OF THE POSSIBILITY OF SUCH DAMAGES. BECAUSE SOME STATES IN THE USA AND SOME PROVINCES IN CANADA DO NOT ALLOW THE EXCLUSION OR LIMITATION OF LIABILITY FOR CONSEQUENTIAL OR INCIDENTAL DAMAGES, THE ABOVE LIMITATIONS MAY NOT APPLY TO YOU. IN ANY EVENT BROTHER'S LICENSOR'S LIABILITY TO YOU FOR ACTUAL DAMAGES FROM ANY CAUSE WHATSOEVER, AND REGARDLESS OF THE FORM OF THE ACTION (WHETHER IN CONTRACT, TORT (INCLUDING NEGLIGENCE), PRODUCT LIABILITY OR OTHERWISE), WILL BE LIMITED TO $50.

Compilation and Publication Notice

Under the supervision of Brother Industries Ltd., this manual has been compiled and published, covering the latest product descriptions and specifications.

The contents of this manual and the specifications of this product are subject to change without notice.

Brother reserves the right to make changes without notice in the specifications and materials contained herein and shall not be responsible for any damages (including consequential) caused by reliance on the materials presented, including but not limited to typographical and other errors relating to the publication.

User’s Guides and where do I find them?

Which Guide?	What’s in it?	Where is it?
Product Safety Guide	Read this Guide first. Read the Safety Instructions before you set up your machine. See this Guide for trademarks and legal limitations.	Printed / In the Box
Quick Setup Guide	Follow the instructions for setting up your machine and installing the drivers and software for the operating system and connection type you are using.	Printed / In the Box
Basic User's Guide	Learn the basic Fax, Copy, Scan and Direct Print operations and how to replace supplies. See troubleshooting tips.	Printed / In the Box
Advanced User's Guide	Learn more advanced operations: Fax, Copy, security features, printing reports and performing routine maintenance.	For USA: PDF file / Brother Solutions Center [1] For Other Countries: (Windows®) PDF file / CD-ROM / In the Box (Macintosh) PDF file / Brother Solutions Center [1]
Software and Network User's Guide	This Guide provides instructions for Scanning, Printing, PC-FAX and other operations that can be performed by connecting your Brother machine to a computer. You can also find useful information about using the Brother ControlCenter utility, using your machine in a network environment, and frequently used terms.	For USA: HTML file / Brother Solutions Center [1] For Other Countries: (Windows®) HTML file / CD-ROM / In the Box (Macintosh) HTML file / Brother Solutions Center [1]
Google Cloud Print Guide	This Guide provides information about how to configure your Brother machine to a Google account and use Google Cloud Print™ services for printing over the Internet.	PDF file / Brother Solutions Center [1]
Mobile Print/Scan Guide for Brother iPrint&Scan	This Guide provides useful information about printing from your mobile device and scanning from your Brother machine to your mobile device when connected on a Wi-Fi® network.	PDF file / Brother Solutions Center [1]
Web Connect Guide	This Guide provides information about how to configure and use your Brother machine to scan, load and view images and files on certain websites that provide these services.	PDF file / Brother Solutions Center [1]

[1] Visit http://solutions.brother.com/.

Table of Contents
(Basic User's Guide)

1 General information 1

Using the documentation 1
Symbols and conventions used in the documentation 1
Accessing Brother Utilities (Windows®) 2
Accessing the Advanced User's Guide, and Software and Network User's Guide 3
Viewing Documentation 3
How to access Guides for Advanced Features 5
Accessing Brother Support (Windows®) 6
Accessing Brother Support (Macintosh) 7
Control panel overview 8
Touchscreen LCD 10
Setting the Ready screen 14
Basic Operations 14
Shortcut Settings 15
Adding Copy Shortcuts 15
Adding Fax Shortcuts 16
Adding Scan Shortcuts 17
Adding Web Connect Shortcuts 18
Adding Apps Shortcuts 19
Changing Shortcuts 20
Editing Shortcut Names 20
Deleting Shortcuts 21
Recalling Shortcuts 21
Set your Station ID 21

2 Loading paper 23

Loading paper and print media 23
Loading paper in the standard paper tray and the optional lower tray 23
Loading paper in the multi-purpose tray (MP tray) 25
Unscannable and unprintable areas 30
Paper settings 31
Paper Size 31
Paper Type 31
Tray Use in Copy mode 32
Tray Use in Fax mode 32
Tray Use in Print mode 33
Acceptable paper and other print media 34
Recommended paper and print media 34
Paper type and size 34
Handling and using special paper 36

3 Loading documents 39

How to load documents 39
Using the automatic document feeder (ADF) 39
Using the scanner glass 40

4 Sending a fax 41

How to send a fax 41
Stop faxing 42
Faxing A4/Legal/Folio size documents from the scanner glass 42
Canceling a fax in process 42
Transmission Verification Report 43

5 Receiving a fax 44

Receive modes 44
Choose the correct Receive Mode 44
Using receive modes 46
Fax Only 46
Fax/Tel 46
Manual 46
External TAD 46
Receive Mode settings 47
Ring Delay 47
F/T Ring Time (Fax/Tel mode only) 47
Easy Receive 48
Fax Preview (Black and White only) 49
How to preview a received fax 49
Turning off Fax Preview 51

6 Using PC-FAX 52

How to use PC-FAX 52
PC-FAX Receive (Windows® only) 52
PC-FAX Send 53

7 Telephone services and external devices 54

Telephone line services 54
Voice Mail 54
Distinctive Ring 55
Connecting an external TAD (telephone answering device) 57
Connections 58
Recording an outgoing message (OGM) 59
Multi-line connections (PBX) 59
External and extension telephones 59
Connecting an external or extension telephone 59
Using external and extension telephones 60
Using a non-Brother cordless external handset 60
Using Remote Codes 61

8 Dialing and storing numbers 62

How to dial 62
Manual dialing 62
Dialing from the Address Book 62
LDAP search 62
Fax redial 62
Storing numbers 63
Storing a pause 63
Storing Address Book numbers 63
Changing Address Book names or numbers 64

9 Making copies 65

How to copy 65
Stop copying 65
Copy preset settings 65
Copy Settings and Options 66

10 Printing from a USB flash drive or digital camera supporting mass storage 67

Creating a PRN file for direct printing 67
Printing directly from the USB flash drive or digital camera supporting mass storage 68
Changing the default settings for direct print 70

11 How to print from a computer 71

Printing a document 71

12 How to scan to a computer 72

Before scanning 72
Scanning a document as a PDF file using ControlCenter4 (Windows®) 73
How to scan a document as a PDF file using the Touchscreen 75

A Routine maintenance 77

Replacing supplies 77
Replacing the toner cartridges 81
Cleaning the corona wires 87
Replacing the drum unit 90
Replacing the belt unit 96
Replacing the waste toner box 101
Cleaning the scanner 108

B Troubleshooting 109

Identifying the problem 109
Error and maintenance messages 111
Transferring your faxes or Fax Journal report 120
Document Jams 122
Document is jammed in the top of the ADF unit 122
Document is jammed under the document cover 122
Removing small documents jammed in the ADF 123
Document is jammed at the output tray 123
Paper Jams 124
Paper is jammed in the multi-purpose tray 124
Paper is jammed in the Paper Tray 1 or Tray 2 125
Paper is jammed at the back of the machine 126
Paper is jammed inside the machine 128
Paper is jammed underneath the paper tray 131
If you are having difficulty with your machine 133
Setting Dial Tone detection 142
Telephone line interference / VoIP 142
Improving the print quality 143
Machine Information 151
Checking the Serial Number 151
Checking the Firmware Version 151
Reset operations 151
How to reset the machine 152

C Settings and features tables 153

Using the Settings Tables 153
Settings Tables 154
Features Tables 181
Entering text 210

D Specifications 211

General 211
Document Size 214
Print media 215
Fax 216
Copy 217
Scanner 218
Printer 219
Interfaces 220
Network 221
Direct Print feature 222
Computer requirements 223
Supplies 224
Important information for the toner cartridge life 225

E Index 227

Table of Contents
(Advanced User's Guide)

You can view the Advanced User's Guide:

In USA:	Brother Solutions Center at http://solutions.brother.com/
In Other Countries:	(Windows®)CD-ROM / In the Box (Macintosh)Brother Solutions Center at http://solutions.brother.com/

The Advanced User's Guide explains the following features and operations.

1 General Setup

Memory storage
Set tone or pulse dialing mode (Canada only)
Volume settings
Automatic Daylight Saving Time
Set the Time Zone
Ecology features
Quiet mode feature
Touchscreen
Dial Prefix

2 Security features

Secure Function Lock 3.0
Active Directory Authentication
IPSec
Setting Lock
Restricting dialing

3 Sending a fax

Additional sending options
Additional sending operations

4 Receiving a fax

Memory Receive Options
Remote retrieval
Additional receiving operations

5 Dialing and storing numbers

Telephone line services
Additional dialing operations
Additional ways to store numbers

6 Printing reports

Fax reports
Reports

7 Making copies

Copy settings

A Routine maintenance

Cleaning and checking the machine
Replacing periodic maintenance parts
Packing and shipping the machine

B Options

Options
Optional paper tray (For MFC-L8600CDW and MFC-L8850CDW (LT-320CL)) (For MFC-L9550CDW (LT-325CL))
Memory board

C Glossary

D Index

1 General information

Using the documentation

Thank you for buying a Brother machine! Reading the documentation will help you make the most of your machine.

Symbols and conventions used in the documentation

The following symbols and conventions are used throughout the documentation.

WARNING

WARNING indicates a potentially hazardous situation which, if not avoided, could result in death or serious injuries.

IMPORTANT

IMPORTANT indicates a potentially hazardous situation which, if not avoided, may result in damage to property or loss of product functionality.

NOTE

Notes tell you how you should respond to a situation that may arise or give tips about how the current operation works with other features.

Electrical Hazard icons alert you to a possible electrical shock.

Fire Hazard icons alert you to the possibility of fire.

Hot Surface icons warn you not to touch machine parts that are hot.

Prohibition icons indicate actions that must not be performed.

Bold	Bold style identifies the dial pad numbers of the Touchpanel or on the computer screen.
Italics	Italicized style emphasizes an important point or refers you to a related topic.
`Courier New`	Courier New font identifies the messages shown on the Touchscreen of the machine.

Follow all warnings and instructions marked on the product.

NOTE

Most of the illustrations in this User's Guide show the MFC-L8850CDW.

Accessing Brother Utilities (Windows®)

Brother Utilities is an application launcher that offers convenient access to all Brother applications installed on your device.

1. (Windows® 7 / Windows Vista® / Windows® XP)

   Click (**Start**) menu, select **All Programs** > **Brother** > **Brother Utilities**

   (Windows® 8)

   Tap or click (**Brother Utilities**) either on the Start screen or the desktop.

   (Windows® 8.1)

   Move your mouse to the lower left corner of the **Start** screen and click (if you are using a touch-based device, swipe up from the bottom of the **Start** screen to bring up the **Apps** screen). When the **Apps** screen appears, tap or click (**Brother Utilities**).

2. Select your machine.

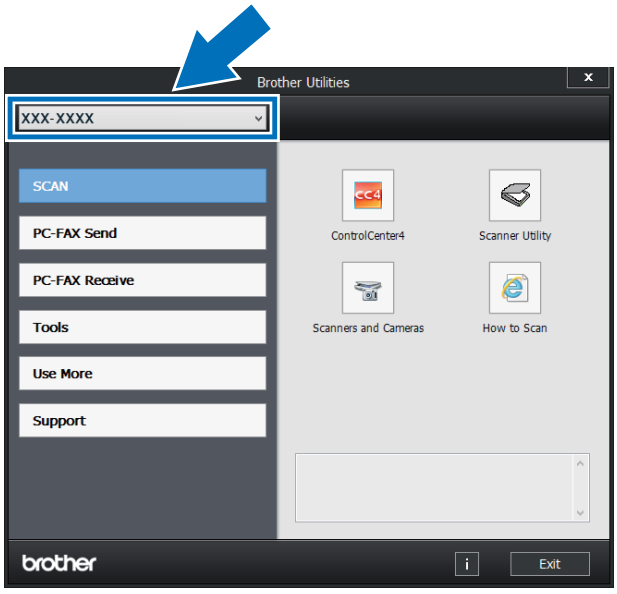

3. Choose the operation you want to use.

Accessing the Advanced User's Guide, and Software and Network User's Guide

This Basic User's Guide does not contain all the information about the machine such as how to use the advanced features for Fax, Copy, Printer, Scanner, PC-FAX and Network. When you are ready to learn detailed information about these operations, read the **Advanced User's Guide** and **Software and Network User's Guide** that are on the CD-ROM (Windows®) [1] or Brother Solutions Center(Macintosh).

[1] **In USA:** You can find the Advanced User's Guide, and Software and Network User's Guide on the Brother Solutions Center at http://solutions.brother.com/.

Viewing Documentation

Viewing Documentation (Windows®)

(Windows® 7 / Windows Vista® / Windows® XP)

To view the documentation, from (**Start**) menu, select **All Programs** > **Brother** > **Brother Utilities**. Click the drop-down list and select your model name (if not already selected). Click **Support** in the left navigation bar, and then click **User's Guides**.

(Windows® 8)

Click (**Brother Utilities**), and then click the drop-down list and select your model name (if not already selected). Click **Support** in the left navigation bar, and then click **User's Guides**.

If you have not installed the software, you can find the documentation on the CD-ROM by following these steps:

1. Turn on your computer. Insert the CD-ROM into your CD-ROM drive.

NOTE

If the Brother screen does not appear, go to **Computer** (**My Computer**).

(Windows® 8: Click (File Explorer) on the taskbar, and then go to **Computer** (**This PC**).) Double-click the CD-ROM icon, and then double-click **start.exe**.

2. If the model name screen appears, click your model name.
3. If the language screen appears, click your language. The CD-ROM Top Menu appears.

4. Click **User's Guides**.
   In USA: The Manuals Download screen appears.
5. If the country screen appears, select your country. After the list of User's Guides appears, select the Guide you want.

Viewing Documentation (Macintosh)

You can view and download User's Guides from the Brother Solutions Center at: http://solutions.brother.com/.
Click **Manuals** on your model's page to download the documentation.

How to find Scanning instructions

There are several ways you can scan documents. You can find the instructions as follows:

Software and Network User's Guide

- *Scanning*
- *ControlCenter*
- *Network Scanning*

Nuance™ PaperPort™ 12SE How-to-Guides

(Windows®)

- The complete Nuance™ PaperPort™ 12SE How-to-Guides can be viewed from the Help tab in the Nuance™ PaperPort™ 12SE application.

Presto! PageManager User's Guide

(Macintosh)

NOTE

Presto! PageManager is available as a download from http://nj.newsoft.com.tw/download/brother/PM9SEInstaller_BR_multilang.dmg

- The complete Presto! PageManager User's Guide can be viewed from the Help selection in the Presto! PageManager application.

How to find Network setup instructions

Your machine can be connected to a wireless or wired network.

- Basic setup instructions:
  (see Quick Setup Guide.)
- Connection to a wireless access point or router supports Wi-Fi Protected Setup™ or AOSS™:
  (see Software and Network User's Guide.)
- More information about network setup:
  (see Software and Network User's Guide.)

How to access Guides for Advanced Features

You can view and download these Guides from the Brother Solutions Center at:

http://solutions.brother.com/

Click **Manuals** on your model's page to download the documentation.

Google Cloud Print Guide

This Guide provides information about how to configure your Brother machine to a Google account and use Google Cloud Print™ services for printing over the Internet.

Mobile Print/Scan Guide for Brother iPrint&Scan

This Guide provides useful information about printing from your mobile device and scanning from your Brother machine to your mobile device when connected on a Wi-Fi network.

Web Connect Guide

This Guide provides information about how to configure and use your Brother machine to scan, load and view images and files on certain websites that provide these services.

Accessing Brother Support (Windows®)

You can find all the contacts you will need, such as web support (Brother Solutions Center), Customer Service and Brother Authorized Service Centers in *Brother numbers* on page i and on the CD-ROM.

- Click **Brother Support** on the **Top Menu**. The Brother Support screen appears.

- To access our website (http://www.brother.com/) click **Brother Home Page**.
- To view all Brother Numbers, including Customer Service numbers for the USA and Canada, click **Support Information**.
- To access the USA Brother online shopping mall (http://www.brothermall.com/) for additional product and service information, click **Brother Mall.com**.
- To access Canada's Brother online shopping mall (http://www.brother.ca/) for additional product and services information, click **Shop Online (Canada)**.
- For the latest news and product support information (http://solutions.brother.com/), click **Brother Solutions Center**.
- To visit our website for original/genuine Brother supplies (http://www.brother.com/original/), click **Supplies Information**.
- To access the Brother CreativeCenter (http://www.brother.com/creativecenter/) for FREE photo projects and printable downloads, click **Brother CreativeCenter**.

To return to the **Top Menu**, click **Back**.

Or, if you are finished, click **Exit**.

Accessing Brother Support (Macintosh)

You can find all the contacts you will need, such as web support.

Visit the Brother Solutions Center at http://solutions.brother.com/.

Control panel overview

MFC-L8850CDW and MFC-L9550CDW have the same 4.85 in. Touchscreen LCD and Touchpanel. MFC-L8600CDW has a 3.7 in. Touchscreen LCD and Touchpanel.

NOTE

The illustrations of the control panel in this chapter are based on MFC-L9550CDW.

1 **NFC (Near Field Communication) Reader** (MFC-L9550CDW)

You can use card authentication by touching the IC card to the NFC Reader on the control panel.

2 **Touchscreen LCD (Liquid Crystal Display)**

This is a Touchscreen LCD. You can access the menus and options by pressing them as they are displayed on this screen.

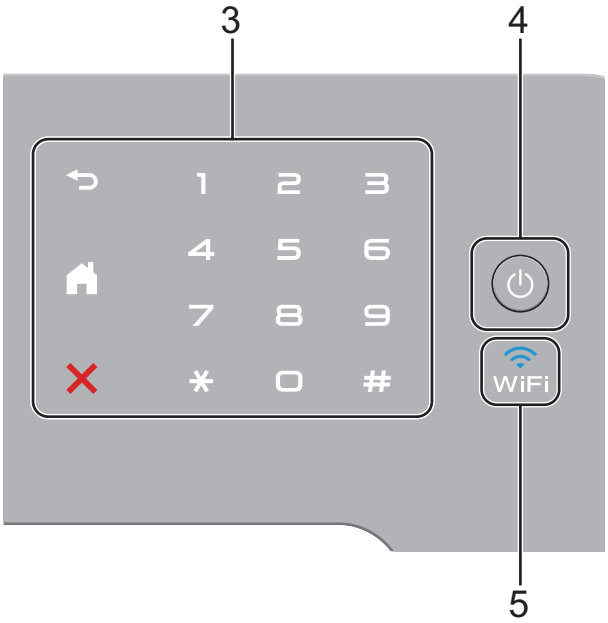

3 **Touchpanel:**

- **Back**

  Press to go back to the previous menu level.

- **Home**

  Press to return to the Home screen. The factory setting displays the date and time, but you can change the Home screen's default setting (see *Setting the Ready screen* on page 14.)

- **Cancel**

  Press to cancel an operation.

- **Dial Pad**

  Press the numbers on the Touchpanel to dial telephone and fax numbers or to enter the number of copies.

4 **Power On/Off**

Press to turn on the machine.

Press and hold down to turn off the machine. The Touchscreen LCD displays `Shutting Down` and stays on for a few seconds before going off.

If you connect an external telephone or TAD, it is always available.

5 WiFi

The Wi-Fi light is on when your Brother machine is connected to a wireless access point.

Touchscreen LCD

You can select three types of screens for the Home screen. When the Home screen is displayed, you can change the displayed screen by swiping left or right, or pressing ◀ or ▶.

The following screens display the machine's status when the machine is idle.

Home screen

The Home screen displays the date and time and provides access to Fax, Copy, Scan, Wi-Fi setup, Toner levels, Setup and the Shortcuts screens.

When the Home screen is displayed the machine is in Ready mode. When Secure Function Lock [1] is turned on an icon will be displayed. When Active Directory Authentication [1] is enabled, the machine's control panel will be locked.

[1] See Advanced User's Guide.

More1 screen

The More1 screen provides access to the Shortcuts screen and additional features, such as Secure Print, Web Shortcut and Apps.

More2 screens

The More2 screen provides access to the Shortcuts screen and the USB menu.

NOTE

Swiping is a type of user operation on the Touchscreen that is performed by brushing your finger across the screen to display the next page or item.

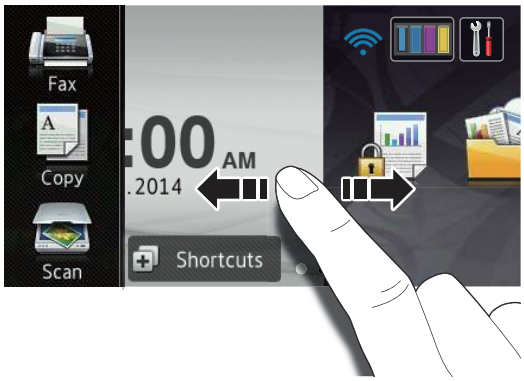

1 **Modes:**

- `Fax`

  Lets you access Fax mode.

- `Copy`

  Lets you access Copy mode.

- `Scan`

  Lets you access Scan mode.

2 **(Wi-Fi Setup)**

A four-level indicator on the Ready mode screen displays the current wireless signal strength if you are using a wireless connection.

You can easily configure the wireless settings by pressing (for more information, see Software and Network User's Guide.)

3 **(Toner)**

See the remaining toner life.

Press to access the `Toner` menu.

NOTE

The indication of remaining toner life will vary depending on the types of documents printed and customer's usage.

4 **(Settings)**

Press to access the main settings (for more information, see *Settings screen* on page 13).

5 **Date and Time**

See the date and time that has been set in the machine.

6 Shortcuts **(Shortcuts)**

Press to set up Shortcuts.

You can quickly copy, scan, send a fax and connect to a web service using the options set as Shortcuts.

NOTE

Eight Shortcut tabs are available. You can set up to six Shortcuts in each Shortcut tab. A total of 48 Shortcuts are available.

7 **Secure Print**

Lets you access the secure print menu.

8 **Web**

Press to connect the Brother machine to an Internet service (for more information, see Web Connect Guide).

9 **Apps**

Apps may have been added and/or app names may have been changed by the provider since this document was published (for more information, see Web Connect Guide).

10 **USB**

Press to access the Direct Print and Scan to USB menus.

11 **New Fax**

When `Fax Preview` is set to `On`, you can see how many new faxes you received into the memory.

12 **Warning icon**

The warning icon appears when there is an error or maintenance message; press `Detail` to view it, and then press to return to Ready mode.

For details, see *Error and maintenance messages* on page 111.

NOTE

- This product adopts the font of ARPHIC TECHNOLOGY CO.,LTD.
- MascotCapsule UI Framework and MascotCapsule Tangiblet developed by HI CORPORATION are used. MascotCapsule is a registered trademark of HI CORPORATION in Japan.

MASCOT CAPSULE

Settings screen

The Touchscreen displays the machine's status when you press .

You can check and access all the machine's settings from the following screen.

1 **Toner**

See the remaining toner life.

Press to access the `Toner` menu.

2 **Receive Mode**

See the current Receive Mode.

- `Fax`
- `Fax/Tel`
- `External TAD`
- `Manual`

NOTE

When the Distinctive Ring feature is turned on, the Touchscreen displays `D/R` (for more information, see *Distinctive Ring* on page 55).

3 **Network**

Press to set up a network connection.

A four level indicator on the screen shows the current wireless signal strength if you are using a wireless connection.

4 **(Date & Time)**

See the date and time.

Press to access the `Date & Time` menu.

5 **Fax Preview**

See the Fax Preview status.

Press to access the Fax Preview setting.

6 **All Settings**

Press to access the full Settings menu.

7 **Tray Setting**

See the selected paper size. Press to change the paper size and paper type settings if needed.

8 **Wi-Fi Direct**

Press to set up a Wi-Fi Direct™ network connection.

Setting the Ready screen

Set the Ready screen to either Home, More1 or More2.

When the machine is idle or you press , the Touchscreen will return to the screen you set.

1. Press .
2. Press All Settings.
3. Swipe up or down, or press ▲ or ▼ to display General Setup.
4. Press General Setup.
5. Swipe up or down, or press ▲ or ▼ to display Button Settings.
6. Press Button Settings.
7. Press Home Button Settings.
8. Press Home, More1 or More2.
9. Press .
   The machine will go to your chosen Home screen.

Basic Operations

Press your finger on the Touchscreen to operate it. To display and access all the screen menus or options, swipe left, right, up, down, or press ◀ ▶ or ▲ ▼ to scroll through them.

IMPORTANT

DO NOT press the Touchscreen with a sharp object, such as a pen or stylus. It may damage the machine.

The following steps explain how to change a setting in the machine. In this example, the Touchscreen Backlight setting is changed from Light to Med.

1. Press .
2. Press All Settings.
3. Swipe up or down, or press ▲ or ▼ to display General Setup.

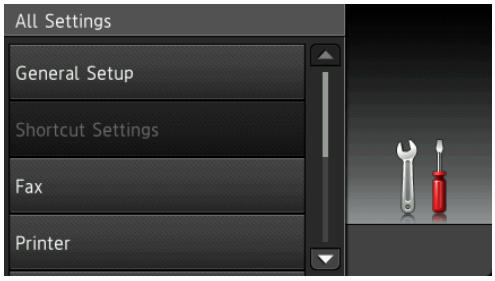

4. Press General Setup.
5. Swipe up or down, or press ▲ or ▼ to display LCD Settings.

6 Press LCD Settings.

7 Press Backlight.

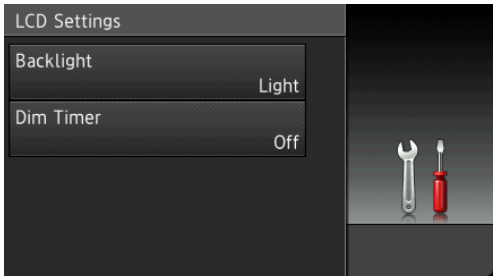

8 Press Med.

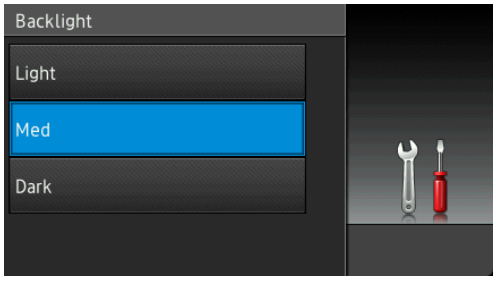

NOTE

Press ⮌ to go back to the previous level.

9 Press .

Shortcut Settings

You can add the fax, copy, scan and Web Connect settings you use most frequently by setting them as your Shortcuts. Later you can recall and apply these settings quickly and easily. You can add up to 48 Shortcuts.

Adding Copy Shortcuts

The following settings can be included in a copy Shortcut:

- Quality
- Enlarge/Reduce
- Density
- Contrast
- Stack/Sort
- Page Layout
- Color Adjust
- 2-sided Copy
- 2-sided Copy Page Layout (MFC-L8850CDW and MFC-L9550CDW)
- Tray Use
- Remove Background Color

1 Press Shortcuts.

2 Press a tab from 1 to 8.

3 Press ＋ where you have not added a Shortcut.

4 Press Copy.

5 Read the information on the Touchscreen, and then confirm it by pressing OK.

6 Swipe up or down, or press ▲ or ▼ to display the copy presets, and then press the preset you want.

7 Swipe up or down, or press ▲ or ▼ to display the available settings, and then press the setting you want.

8 Swipe up or down, or press ▲ or ▼ to display the available options for the setting, and then press the option you want.
Repeat steps ❼ and ❽ until you have selected all the settings for this Shortcut.

9 When you have finished changing the settings, press Save as Shortcut.

10 Read and confirm the displayed list of settings you selected, and then press OK.

11 Enter a name for the Shortcut using the keyboard on the machine's Touchscreen. (To help you enter characters, see *Entering text* on page 210.)
Press OK.

12 Press OK to save your Shortcut.

Adding Fax Shortcuts

The following settings can be included in a fax Shortcut:

- Address
- Fax Resolution
- 2-sided Fax (MFC-L8850CDW and MFC-L9550CDW)
- Contrast
- Broadcasting
- Real Time TX
- Coverpage Setup
- Overseas Mode
- Glass Scan Size

1 Press Shortcuts.

2 Press a tab from 1 to 8.

3 Press ➕ where you have not added a Shortcut.

4 Press Fax.

5 Read the information on the Touchscreen, and then confirm it by pressing OK.

6 Enter the fax or telephone number using the dial pad on the Touchpanel, the Address Book or the Call History on the Touchscreen. When you have finished, go to step ❼.

NOTE

- You can enter up to 20 digits for a fax number.
- If the Shortcut is to be used for broadcasting, press Options and select Broadcasting in step ❽ before entering the fax or telephone number in step ❻.
- You can enter up to 20 fax numbers if the Shortcut is for broadcasting. The fax numbers can be entered in any combination of Group numbers from the Address Book, individual fax numbers from the Address Book or numbers entered manually (see Advanced User's Guide).
- When you enter a fax number in a Shortcut, it will be added automatically to the Address Book. The name in the Address Book will be the Shortcut name plus a sequential number.

7 Press Options.

8 Swipe up or down, or press ▲ or ▼ to display the available settings, and then press the setting you want.

9 Press the option you want.
Repeat steps ❽ and ❾ until you have selected all the settings for this Shortcut.
Press OK.

10 When you have finished changing the settings, press Save as Shortcut.

11 Read and confirm the displayed list of settings you selected, and then press OK.

12 Enter a name for the Shortcut using the keyboard on the machine's Touchscreen. (To help you enter letters, see *Entering text* on page 210.) Press OK.

13 Press OK to save your Shortcut.

Adding Scan Shortcuts

The following settings can be included in a scan Shortcut:

to USB

- 2-sided Scan (MFC-L8850CDW and MFC-L9550CDW)
- Scan Type
- Resolution
- File Type
- Glass Scan Size
- File Name
- File Size
- Remove Background Color

to E-mail Server (MFC-L8600CDW is supported only after IFAX is downloaded)

- Address
- 2-sided Scan (MFC-L8850CDW and MFC-L9550CDW)
- Scan Type
- Resolution
- File Type
- Glass Scan Size
- File Size

to OCR / to File / to Image / to E-mail

- PC Select

to FTP/SFTP / to Network

- Profile Name

1 Press Shortcuts.

2 Press a tab from 1 to 8.

3 Press ⊞ where you have not added a Shortcut.

4 Press Scan.

5 Swipe up or down, or press ▲ or ▼ to display the type of scan you want, and then press it.

6 Do one of the following:

- If you pressed to USB, read the information on the Touchscreen, and then press OK to confirm it. Go to step 9.
- If you pressed to E-mail Server, read the information on the Touchscreen, and then press OK to confirm it. Go to step 7.
- If you pressed to OCR, to File, to Image or to E-mail, read the information on the Touchscreen, and then press OK to confirm it. Go to step 8.
- If you pressed to FTP/SFTP or to Network, read the information on the Touchscreen, and then press OK to confirm it.

  Swipe up or down, or press ▲ or ▼ to display the Profile Name, and then press it.

  Press OK to confirm the Profile Name you have selected. Go to step 14.

NOTE

To add a Shortcut for to FTP/SFTP and to Network you must have added the Profile Name beforehand.

7 Do one of the following:

- To enter an E-mail address manually, press `Manual`. Enter the E-mail address using the keyboard on the machine's Touchscreen. (To help you enter letters, see *Entering text* on page 210.)

  Press `OK`.

- To enter an E-mail address from the `Address Book`, press `Address Book`. Swipe up or down, or press ▲ or ▼ to display the E-mail address you want, and then press it.

  Press `OK`.

After you confirm the E-mail address you entered, press `OK`. Go to step ❾.

NOTE

Press `Detail` to view the list of addresses you have entered.

8 Do one of the following:

- When the machine is connected to a computer using a USB connection:

  Press `OK` to confirm USB is selected as the PC Name. Go to step ⓮.

- When the machine is connected to a network:

  Swipe up or down, or press ▲ or ▼ to display the PC Name, and then press it. Press `OK` to confirm the PC Name you selected. Go to step ⓮.

9 Press `Options`.

10 Swipe up or down, or press ▲ or ▼ to display the available settings, and then press the setting you want.

11 Swipe up or down, or press ▲ or ▼ to display the available options for the setting, and then press the option you want.
Repeat steps ❿ and ⓫ until you have selected all the settings for this Shortcut.
Press `OK`.

12 Review the settings you have selected:

- If you must make more changes, return to step ❾.
- If you are satisfied with your changes, press `Save as Shortcut`.

13 Review your settings on the Touchscreen, and then press `OK`.

14 Enter a name for the Shortcut using the keyboard on the machine's Touchscreen. (To help you enter letters, see *Entering text* on page 210.)
Press `OK`.

15 Read the information on the Touchscreen, and then press `OK` to save your Shortcut.

Adding Web Connect Shortcuts

The settings for these services can be included in a Web Connect Shortcut:

- SKYDRIVE®
- BOX
- PICASA WEB ALBUMS™
- GOOGLE DRIVE™
- FLICKR®
- FACEBOOK
- EVERNOTE®
- DROPBOX

NOTE

- Web services may have been added and/or service names may have been changed by the provider since this document was published.
- To add a Web Connect Shortcut, you must have an account with the desired service (for more information, see Web Connect Guide).

1. Press Shortcuts.
2. Press a tab from 1 to 8.
3. Press ⊞ where you have not added a Shortcut.
4. Press Web.
5. If information about the Internet connection is displayed, read the information and confirm it by pressing OK.

NOTE

Occasionally, updates or announcements about your machine's feature will be displayed on the machine's Touchscreen.

Read the information, and then press OK.

6. Swipe left or right, or press ◀ or ▶ to display the available service, and then press the desired service.
7. Press your account.
   If the account needs a PIN code, enter the PIN for the account using the keyboard on the machine's Touchscreen.
   Press OK.
8. Press the function you want.

NOTE

The functions that can be set vary depending on the selected service.

9. Read and confirm the displayed list of functions you selected, and then press OK.
10. Enter a name for the Shortcut using the keyboard on the Touchscreen. (For help entering letters, see *Entering text* on page 210.)
    Press OK.
11. Press OK to save your Shortcut.

Adding Apps Shortcuts

The settings for these services can be included in an Apps Shortcut:

- NoteScan
- Outline&Scan
- Outline&Copy

NOTE

Web services may have been added and/or service names may have been changed by the provider since this document was published.

1. Press Shortcuts.
2. Press a tab from 1 to 8.
3. Press ⊞ where you have not added a Shortcut.
4. Press Apps.
5. If information about the Internet connection is displayed, read the information and confirm it by pressing OK.

NOTE

Occasionally, updates or announcements about your machine's feature will be displayed on the Touchscreen.

Read the information, and then press OK.

6. Swipe left or right, or press ◀ or ▶ to display the available apps, and then press the desired app.
7. Press your account.
   If the account needs a PIN code, enter the PIN for the account using the keyboard on the machine's Touchscreen.
   Press OK.

8 Press the app you want.

NOTE

The apps that can be set vary depending on the selected service.

9 Read and confirm the displayed list of apps you selected, and then press OK.

10 Enter a name for the Shortcut using the keyboard on the machine's Touchscreen. (For help entering letters, see *Entering text* on page 210.)
Press OK.

11 Press OK to save your Shortcut.

Changing Shortcuts

You can change the settings in a Shortcut.

NOTE

(Web Connect Shortcuts) You cannot change a Web Connect Shortcut. If you want to change the Shortcut, you must delete it, and then add a new Shortcut.

(For more information, see *Deleting Shortcuts* on page 21 and *Adding Web Connect Shortcuts* on page 18.)

1 Press Shortcuts.

2 Press a tab from 1 to 8 to display the Shortcut you want to change.

3 Press the Shortcut you want. The settings for the Shortcut that you chose are displayed.

4 Change the settings for the Shortcut you chose in step ❸ (for more information, see *Shortcut Settings* on page 15).

5 When you have finished changing settings, press Save as Shortcut.

6 Press OK to confirm.

7 Do one of the following:

- To overwrite the Shortcut, press Yes. Go to step ❾.
- If you do not want to overwrite the Shortcut, press No to enter a new Shortcut name. Go to step ❽.

8 To create a new Shortcut, hold down ⌫ to delete the current name, and then enter a new name using the keyboard on the machine's Touchscreen. (To help you enter letters, see *Entering text* on page 210.)
Press OK.

9 Press OK to confirm.

Editing Shortcut Names

You can edit a Shortcut name.

1 Press Shortcuts.

2 Press a tab from 1 to 8 to display the Shortcut you want.

3 Press ⚙.

NOTE

You can also press ⚙, All Settings and Shortcut Settings.

4 Press the Shortcut.

5 Press Edit Shortcut Name.

6 To edit the name, hold down ⌫ to delete the current name, and then enter a new name using the keyboard on the machine's Touchscreen. (To help you enter letters, see *Entering text* on page 210.)
Press OK.

Deleting Shortcuts

You can delete a Shortcut.

1. Press Shortcuts.
2. Press a tab from 1 to 8 to display the Shortcut you want.
3. Press .

NOTE

You can also press , All Settings and Shortcut Settings.

4. Press the Shortcut.
5. Press Delete to delete the Shortcut that you chose in step ❹.
6. Press Yes to confirm.

Recalling Shortcuts

The Shortcut settings are displayed on the Shortcut screen. To recall a Shortcut, simply press the Shortcut name.

Set your Station ID

Set the machine's Station ID if you want the date and time to appear on each fax you send.

1. Press .
2. Press All Settings.
3. Swipe up or down, or press ▲ or ▼ to display Initial Setup.
   Press Initial Setup.
4. Swipe up or down, or press ▲ or ▼ to display Station ID.
   Press Station ID.
5. Press Fax.
6. Enter your fax number (up to 20 digits) using the numbers on the Touchscreen, and then press OK.
7. Press Tel.
8. Enter your telephone number (up to 20 digits) using the numbers on the Touchscreen, and then press OK. If your telephone number and fax number are the same, enter the same number again.
9. Press Name.
10. Use the Touchscreen to enter your name (up to 20 characters), and then press OK.

NOTE

- To enter numbers or special characters, press A 1 @ repeatedly until the character you want to enter appears, then press the character you want.
- If you entered a character incorrectly and want to change it, press ◀ or ▶ c to move the cursor to the incorrect character, then press ⌫.
- To enter a space, press `Space`.
- For more details, see *Entering text* on page 210.

11 Press .

NOTE

(USA only) The Telephone Consumer Protection Act of 1991 makes it unlawful for any person to use a computer or electronic device to send any message via a telephone fax machine unless such messages clearly contain, in a margin at the top or bottom of each transmitted page, or on the first page of the transmission, the date and time it is sent and an identification of the business or other entity or other individual sending the message and the telephone number of the sending machines or such business, other entity or individual. To program this information into your machine, see Quick Setup Guide and *Set your Station ID* on page 21.

2 Loading paper

Loading paper and print media

The machine can feed paper from the standard paper tray, multi-purpose tray or optional lower tray.

When you load paper in the paper tray, note the following:

- If your application software supports paper size selection on the print menu, you can select it through the software. If your application software does not support it, you can set the paper size in the printer driver or by pressing the buttons on the Touchscreen.

Loading paper in the standard paper tray and the optional lower tray

You can load up to 250 sheets in the standard paper tray (Tray 1). You can also load up to 500 sheets in the optional lower tray (Tray 2). Paper can be loaded up to the maximum paper mark (▼ ▼ ▼) on the right side of the paper tray (for the recommended paper to use, see *Acceptable paper and other print media* on page 34).

Printing on plain paper, thin paper or recycled paper from Tray 1 and Tray 2

1. Pull the paper tray completely out of the machine.

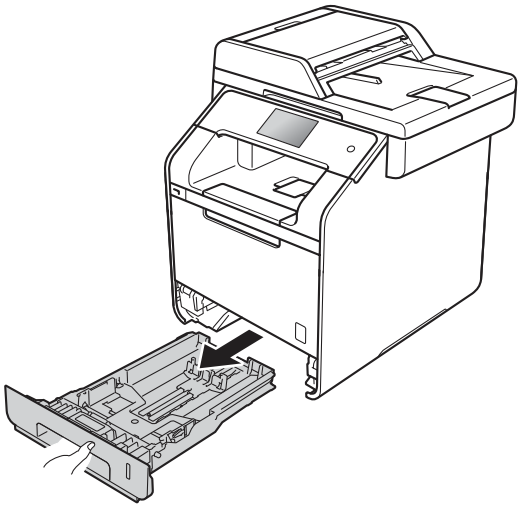

2 While pressing the blue paper-guide release levers (1), slide the paper guides to fit the paper you are loading in the tray. Make sure the guides are firmly in the slots.

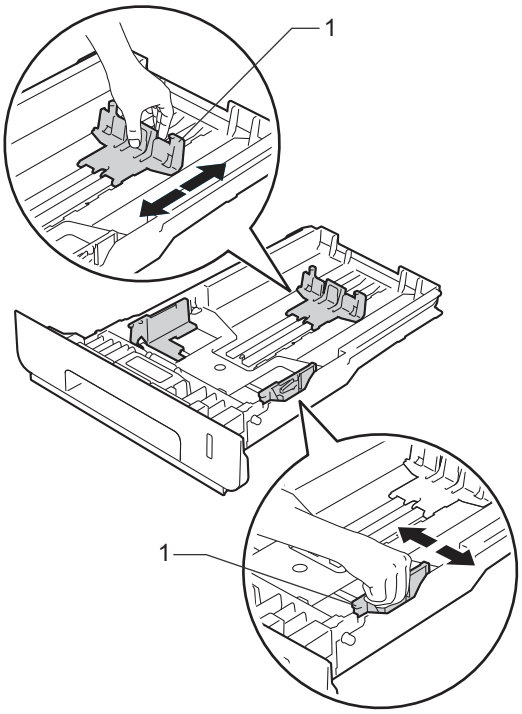

3 Fan the stack of paper well to avoid paper jams and misfeeds.

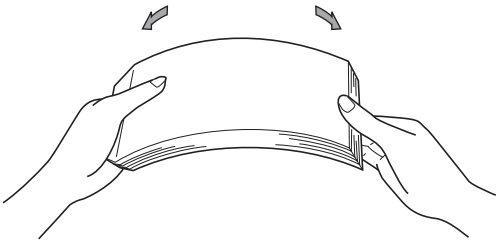

4 Load paper in the tray and make sure:

- The paper is below the maximum paper mark (▼ ▼ ▼) (1).

  Overfilling the paper tray will cause paper jams.
- The side to be printed on is *face down*.
- The paper guides touch the sides of the paper so it will feed correctly.

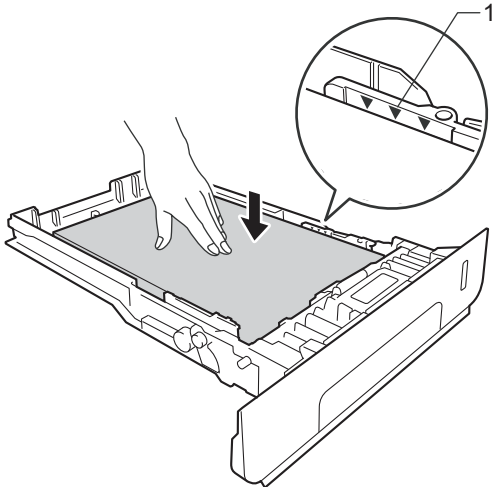

5 Put the paper tray *firmly* back in the machine. Make sure the tray is completely inserted into the machine.

6 Lift up the support flap (1) to prevent paper from sliding off the face-down output tray, or remove each page as soon as it comes out of the machine.

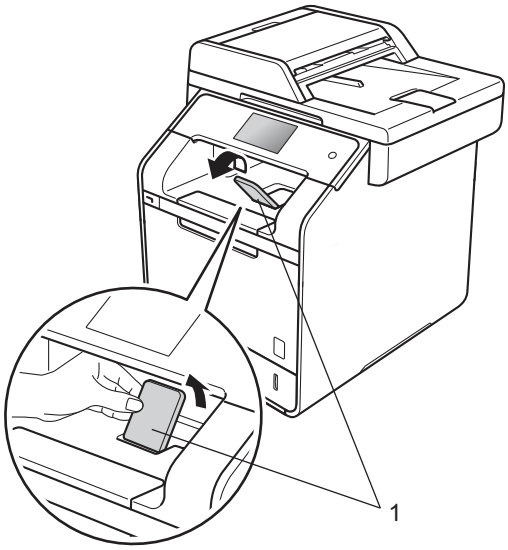

7 Send the print job to the machine.

Loading paper in the multi-purpose tray (MP tray)

You can load up to three envelopes, one sheet of glossy paper, other special print media, or up to 50 sheets of plain paper in the MP tray. Use this tray to print or copy on thick paper, bond paper, labels , envelopes or glossy paper. (For the recommended paper to use, see *Acceptable paper and other print media* on page 34).

Printing on plain paper, thin paper, recycled paper, bond paper or glossy paper from the MP tray

1 Open the MP tray and lower it gently.

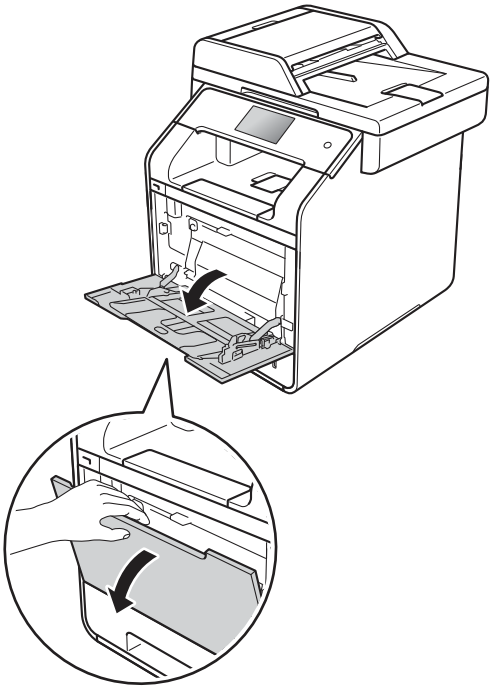

2 Pull out the MP tray support (1) and unfold the flap (2).

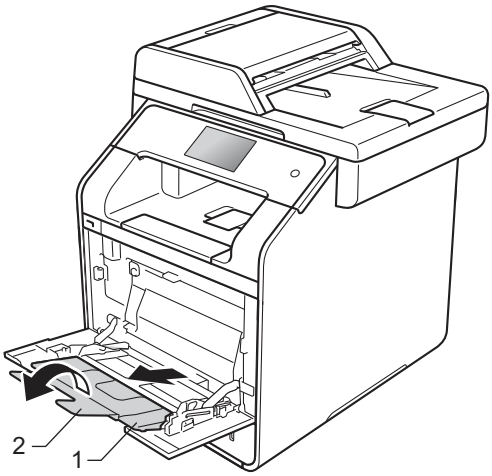

3 Load paper in the MP tray and make sure:

- The paper stays under the maximum paper tab (1).
- The paper's leading edge (top of paper) is positioned between the ▲ and ▼ arrows (2).
- The side to be printed on must be face up with the leading edge (top of the paper) in first.
- The paper guides touch the sides of the paper so it will feed properly.

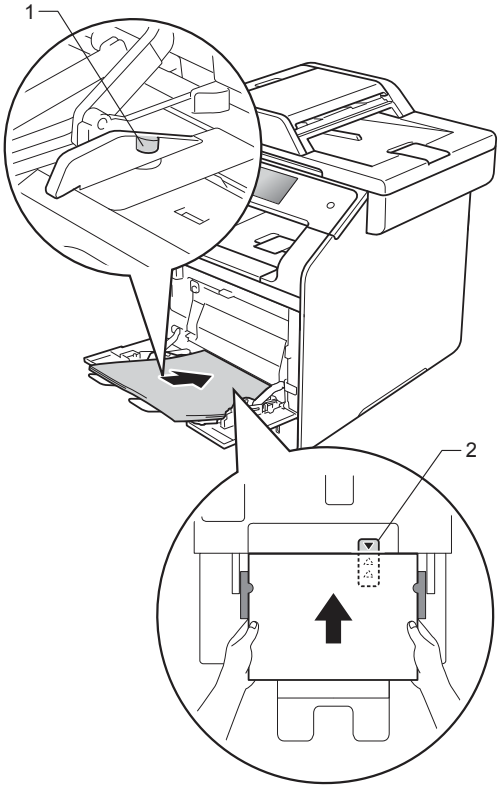

NOTE

When you are using glossy paper, put only one sheet at a time in the MP tray to avoid a paper jam.

4 Lift up the support flap to prevent paper from sliding off the face-down output tray, or remove each page as soon as it comes out of the machine.

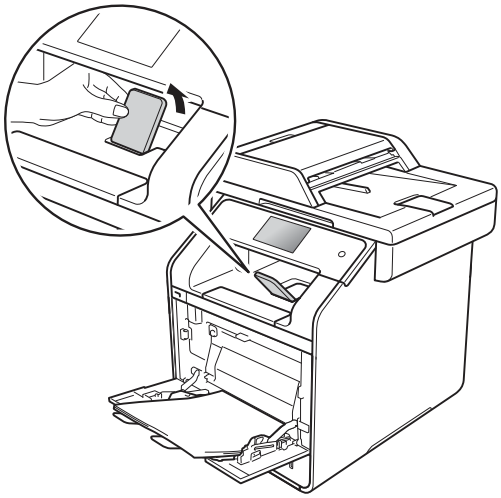

5 Send the print job to the machine.

Printing on thick paper, labels and envelopes from the MP tray

When the back cover (face-up output tray) is pulled down, the machine has a straight paper path from the MP tray through to the back of the machine. Use this paper feed and output method when you want to print on thick paper, labels or envelopes. (For the recommended paper to use, see *Acceptable paper and other print media* on page 34 and *Envelopes* on page 37.)

Before loading, press the corners and sides of the envelopes to make them as flat as possible.

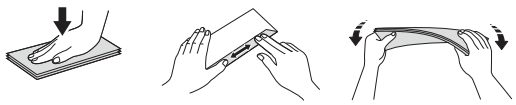

1. Open the back cover (face-up output tray).

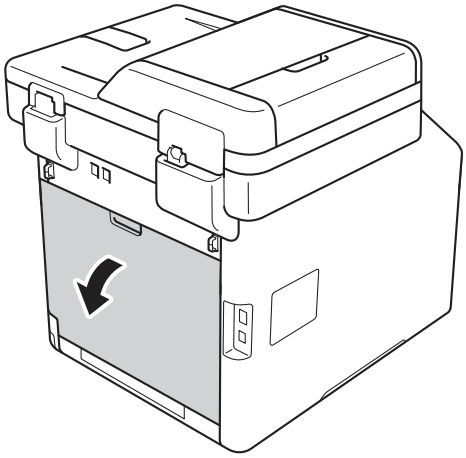

2. (For printing envelopes only)
   Pull down the two gray levers, one on the left side and one on the right side, toward you as shown in the illustration below.

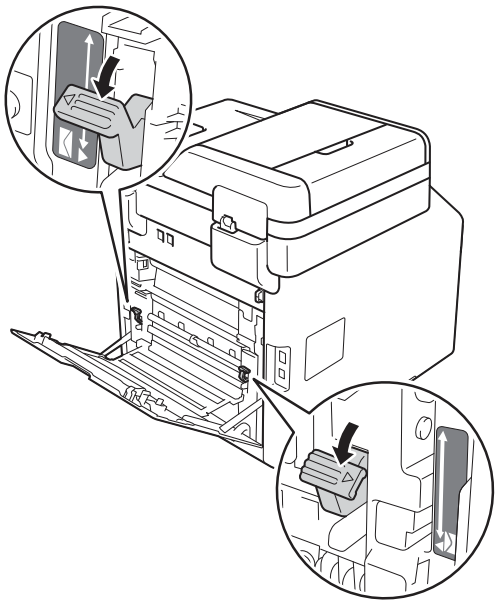

3. Open the MP tray and lower it gently.

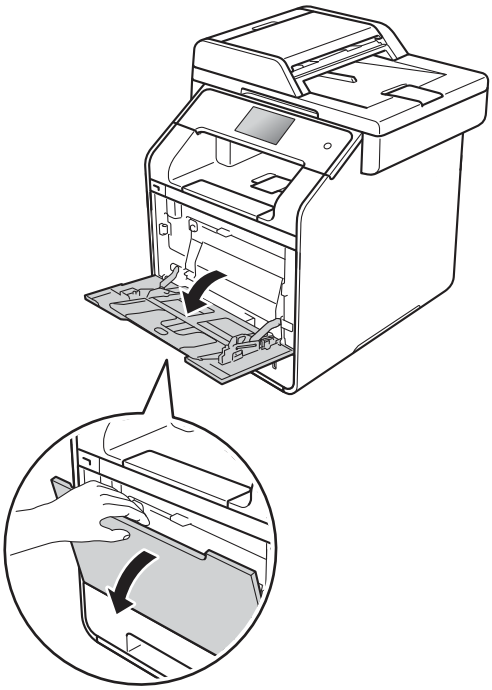

4 Pull out the MP tray support (1) and unfold the flap (2).

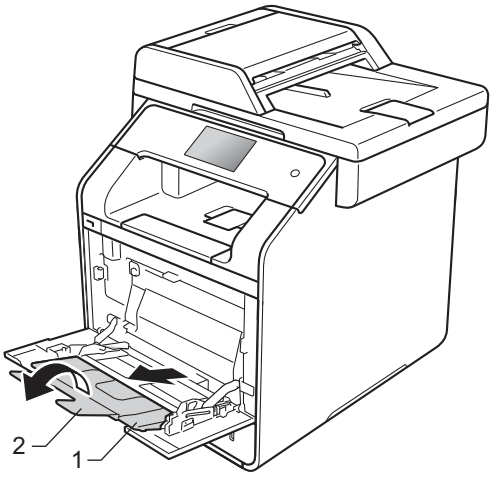

5 Load paper, labels or envelopes in the MP tray. Make sure:

- The number of envelopes in the MP tray does not exceed three.
- The paper, labels or envelopes stay under the maximum paper tab (1).
- The paper's leading edge (top of paper) is positioned between the ▲ and ▼ arrows (2).
- The side to be printed on must be face up.

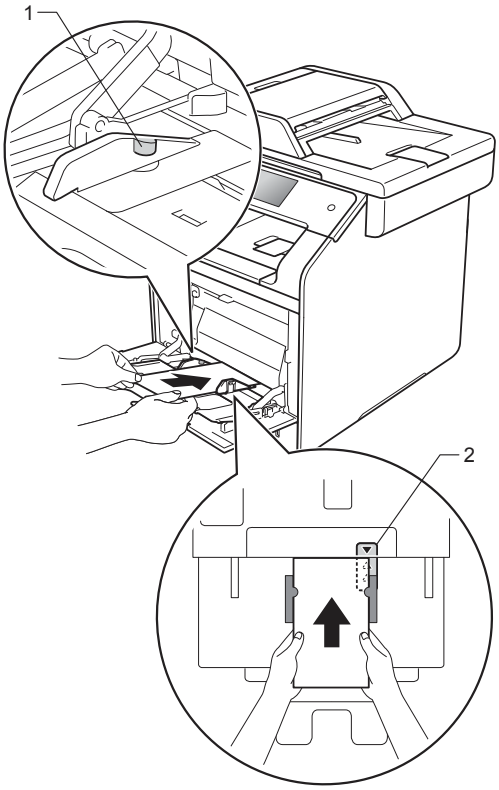

6 Send the print job to the machine.

NOTE

- Remove each envelope as soon as it has been printed. Stacking the envelopes may cause them to jam or curl.
- If envelopes or thick paper get smudged during printing set the **Media Type** to **Env. Thick** or **Thicker Paper** to increase the fixing temperature.
- If the envelopes are creased after they are printed, see *Improving the print quality* on page 143.
- If your thick paper curls during printing, load only one sheet at a time in the MP tray.
- Envelope joints that are sealed by the manufacturer should be secure.
- All sides of the envelope should be properly folded without wrinkles or creases.

7 (For printing envelopes only)
When you have finished printing, reset the two gray levers that you pulled down in step ❷ back to their original positions.

8 Close the back cover (face-up output tray).

NOTE

- For 2-sided printing of copies and received faxes, see Advanced User's Guide.
- For 2-sided printing using your computer, see Software and Network User's Guide.

Unscannable and unprintable areas

The figures in the table show maximum unscannable and unprintable areas. These areas may vary depending on the paper size or settings in the application you are using.

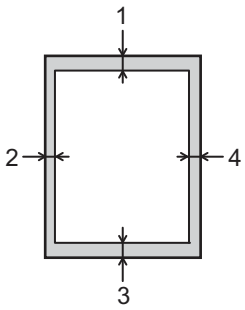

Usage	Document Size	Top (1) Bottom (3)	Left (2) Right (4)
Fax (Sending)	Letter	0.12 in. (3 mm)	0.16 in. (4 mm)
	A4	0.12 in. (3 mm)	(ADF) 0.04 in. (1 mm) (Scanner Glass) 0.12 in. (3 mm)
	Legal	0.12 in. (3 mm)	0.16 in. (4 mm)
Copy* *a single copy or a 1 in 1 copy	Letter	0.16 in. (4 mm)	0.16 in. (4 mm)
	A4	0.16 in. (4 mm)	0.12 in. (3 mm)
	Legal	0.16 in. (4 mm)	0.16 in. (4 mm)
Scan	Letter	0.12 in. (3 mm)	0.12 in. (3 mm)
	A4	0.12 in. (3 mm)	0.12 in. (3 mm)
	Legal (ADF)	Approx. 0.12 in. (3 mm)	Approx. 0.12 in. (3 mm)
Print	Letter	0.16 in. (4.2 mm)	0.16 in. (4.2 mm)
	A4	0.16 in. (4.2 mm)	0.16 in. (4.2 mm)
	Legal	0.16 in. (4.2 mm)	0.16 in. (4.2 mm)

Paper settings

Paper Size

When you change the size of paper in the tray, you must also change the setting for paper size at the same time so your machine can fit the document or an incoming fax on the page.

You can use the following sizes of paper for copies: Letter, A4, Legal, Executive, B5(JIS), A5, A5 L (Long Edge), A6 and Folio and the following sizes for printing faxes: Letter, A4, Legal or Folio (8.5 in. × 13 in.).

1. Press .
2. Press (Tray Setting).
3. Press Paper Size.
4. Press MP Tray, Tray #1 or Tray #2 [1].
5. Swipe up or down, or press ▲ or ▼ to display Letter, A4, B5(JIS), B5(ISO) [2], A5, A5(Long Edge) [3], A6 [3], Executive, Legal, Folio, 3"x5" [2], Com-10 [2], Monarch [2], C5 [2], DL [2], and press the option you want.
6. Press .

[1] Tray #2 appears only if the optional lower tray is installed.

[2] MP Tray only

[3] MP Tray and Tray #1 only

NOTE

- When an appropriate size is not in the tray received faxes will be stored in the machine's memory and Size mismatch will appear on the Touchscreen (for more information, see *Error and maintenance messages* on page 111).
- If the tray is out of paper and received faxes are in the machine's memory, No Paper will appear on the Touchscreen. Insert paper in the empty tray.

Paper Type

To get the best print quality set the machine for the type of paper you are using.

1. Press .
2. Press (Tray Setting).
3. Press Paper Type.
4. Press MP Tray, Tray #1 or Tray #2 [1].
5. Swipe up or down, or press ▲ or ▼ to display Thin, Plain Paper, Thick [2], Thicker [2], Recycled Paper, Bond Paper [2], Label [2], Envelope [2], Env. Thin [2], Env. Thick [2], Glossy Paper [2], and press the option you want.
6. Press .

[1] Tray #2 appears only if the optional lower tray is installed.

[2] MP Tray only

Tray Use in Copy mode

You can change the priority tray that the machine will use for printing copies.

When you choose `Tray#1 Only`, `MP Only` or `Tray#2 Only` [1], the machine pulls the paper only from that tray. If the selected tray is out of paper, `No Paper` will appear on the Touchscreen. Insert the paper in the empty tray.

To change the tray setting follow the instructions below:

1. Press .
2. Press (`Tray Setting`).
3. Press `Tray Use: Copy`.
4. Swipe up or down, or press ▲ or ▼ to choose `Tray#1 Only`, `Tray#2 Only` [1], `MP Only`, `MP>T1>T2` [1], `MP>T2>T1` [1], `T1>T2>MP` [1] or `T2>T1>MP` [1], and press the option you want.
5. Press .

[1] `Tray#2 Only` and `T2` appear only if the optional lower tray is installed.

NOTE

- When loading the documents in the ADF and `MP>T1>T2`, `T1>T2>MP` or `T2>T1>MP` is selected, the machine looks for the tray with the most suitable paper and pulls paper from that tray. If no tray has suitable paper, the machine pulls paper from the higher priority tray.
- When using the scanner glass, your document is copied from the higher priority tray even if more suitable paper is in another paper tray.

Tray Use in Fax mode

You can change the default tray that the machine will use for printing received faxes.

When you choose `Tray#1 Only`, `MP Only` or `Tray#2 Only` [1], the machine pulls the paper only from that tray. If the selected tray is out of paper, `No Paper` will appear on the Touchscreen. Insert the paper in the empty tray.

When you choose `MP>T1>T2` [1], the machine pulls paper from the MP tray until it is empty, then from Tray 1, and then from Tray 2.

When you choose `MP>T2>T1` [1], the machine pulls paper from the MP tray until it is empty, then from Tray 2, and then from Tray 1.

When you choose `T1>T2>MP` [1], the machine pulls paper from Tray 1 until it is empty, then from Tray 2, and then from the MP tray.

When you choose `T2>T1>MP` [1], the machine pulls paper from Tray 2 until it is empty, then from Tray 1, and then from the MP tray.

NOTE

- You can use four sizes of paper for printing faxes: Letter, A4, Legal or Folio (8.5 in. × 13 in.).

  When an appropriate size is not in any of the trays, received faxes will be stored in the machine's memory and `Size mismatch` will appear on the Touchscreen. (for more information, see *Error and maintenance messages* on page 111).
- If the tray is out of paper and received faxes are in the machine's memory, `No Paper` will appear on the Touchscreen. Insert paper in the empty tray.

1. Press .
2. Press (`Tray Setting`).

3 Swipe up or down, or press ▲ or ▼ to display `Tray Use: Fax`.

4 Press `Tray Use: Fax`.

5 Swipe up or down, or press ▲ or ▼ to choose `Tray#1 Only`, `Tray#2 Only` [1], `MP Only`, `MP>T1>T2` [1], `MP>T2>T1` [1], `T1>T2>MP` [1] or `T2>T1>MP` [1], and press the option you want.

6 Press .

[1] `Tray#2 Only` and `T2` appear only if the optional lower tray is installed.

Tray Use in Print mode

You can change the default tray the machine will use for printing from your computer and for Direct Print.

1 Press .

2 Press (`Tray Setting`).

3 Swipe up or down, or press ▲ or ▼ to display `Tray Use: Print`.

4 Press `Tray Use: Print`.

5 Swipe up or down, or press ▲ or ▼ to choose `Tray#1 Only`, `Tray#2 Only` [1], `MP Only`, `MP>T1>T2` [1], `MP>T2>T1` [1], `T1>T2>MP` [1] or `T2>T1>MP` [1], and press the option you want.

6 Press .

[1] `Tray#2 Only` and `T2` appear only if the optional lower tray is installed.

Acceptable paper and other print media

Print quality may vary according to the type of paper you are using.

You can use the following types of print media: plain paper, thin paper, thick paper, thicker paper, bond paper, recycled paper, labels, envelopes or glossy paper (see *Print media* on page 215).

For best results, follow these instructions:

- DO NOT load different types of paper in the paper tray at the same time because it may cause the paper to jam or misfeed.
- For correct printing, you must choose the same paper size from your software application as the paper in the tray.
- Avoid touching the printed surface of the paper immediately after printing.
- Before you buy a lot of paper, test a small quantity to make sure the paper is appropriate for the machine.
- Use labels that are designed for use in *laser* machines.

Recommended paper and print media

To get the best print quality, we recommend using the paper in the table.

Paper Type	Item
Plain Paper	Xerox 4200DP 20 lb
	Hammermill Laser Print (24 lb=90 g/m^2)
Recycled Paper	No specific brand recommended
Labels	Avery laser labels white #5160
Envelopes	No specific brand recommended
Glossy Paper	NewPage Futura Laser Gloss 80 lb Text/32 lb Bond (118 g/m^2) Xerox Digital Color Elite Gloss

Paper type and size

The machine feeds paper from the installed standard paper tray, multi-purpose tray or optional lower tray.

The names for the paper trays in the printer driver and this Guide are as follows:

Tray and optional unit	Name
Multi-purpose tray	MP tray
Standard paper tray	Tray 1
Optional lower tray unit	Tray 2

Paper Tray Capacity

	Paper size	Paper types	No. of sheets
Multi-purpose tray (MP tray)	Width: 3.0 to 8.5 in. (76.2 to 215.9 mm) Length: 5 to 14 in. (127 to 355.6 mm)	Plain Paper, Thin Paper, Thick Paper, Thicker Paper, Recycled Paper, Bond Paper, Labels, Envelopes, Env. Thin, Env.Thick and Glossy Paper [2]	up to 50 sheets 20 lb (80 g/m^2) 3 Envelopes 1 Glossy paper
Standard paper tray (Tray 1)	Letter, A4, Legal, B5 (JIS), Executive, A5, A5 (Long Edge), A6, Folio [1]	Plain Paper, Thin Paper and Recycled Paper	up to 250 sheets 20 lb (80 g/m^2)
Optional lower tray (Tray 2)	Letter, A4, Legal, B5 (JIS), Executive, A5, Folio [1]	Plain Paper, Thin Paper and Recycled Paper	up to 500 sheets 20 lb (80 g/m^2)

[1] Folio size is 8.5 in. × 13 in. (215.9 mm × 330.2 mm).

[2] Load only one sheet of Glossy in the MP tray.

Recommended paper specifications

The following paper specifications are appropriate for this machine.

Basis Weight	20-24 lb (75-90 g/m^2)
Thickness	80-110 μm
Roughness	Higher than 20 sec.
Stiffness	90-150 cm^3/100
Grain Direction	Long grain
Volume Resistivity	10e^9-10e^{11} ohm
Surface Resistivity	10e^9-10e^{12} ohm-cm
Filler	$CaCO_3$ (Neutral)
Ash Content	Below 23 wt%
Brightness	Higher than 80%
Opacity	Higher than 85%

- Use plain paper that is appropriate for laser/LED machines to make copies.
- Use paper that is 20 to 24 lb (75 to 90 g/m^2).
- Use long grain paper with a neutral Ph value, and a moisture content of approximately 5%.
- This machine can use recycled paper that meets DIN 19309 specifications.

Handling and using special paper

The machine is designed to work well with most types of xerographic and bond paper. However, some paper variables may have an effect on print quality or handling reliability. Always test samples of paper before purchasing to ensure desirable performance. Store paper in its original packaging and keep it sealed. Keep the paper flat and away from moisture, direct sunlight and heat.

Some important guidelines when selecting paper are:

- DO NOT use inkjet paper because it may cause a paper jam or damage your machine.
- Preprinted paper must use ink that can withstand the 392 °F (200 °C) temperature of the machine's fusing process.
- If you use bond paper, paper that has a rough surface, or paper that is wrinkled or creased, the paper may exhibit degraded performance.

Types of paper to avoid

IMPORTANT

Some types of paper may not perform well or may cause damage to your machine.

DO NOT use paper:

- that is highly textured
- that is extremely smooth or shiny
- that is curled or warped

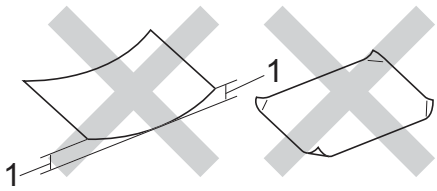

1 A curl of 0.08 in. (2 mm) or greater may cause jams to occur.

- that is coated or has a chemical finish
- that is damaged, creased or folded
- that exceeds the recommended weight specification in this guide
- with tabs and staples
- with letterheads using low temperature dyes or thermography
- that is multipart or carbonless
- that is designed for inkjet printing

If you use any of the types of paper listed above, they may damage your machine. This damage is not covered under any Brother warranty or service agreement.

Envelopes

The machine is designed to work well with most envelopes. However, some envelopes may have feed and print quality problems because of the way they have been made. Envelopes should have edges with straight, well-creased folds. Envelopes should lie flat and not be of baggy or flimsy construction. Use only quality envelopes from a supplier who understands that you will be using the envelopes in a laser machine.

Envelopes can only be fed through the multi-purpose tray.

We recommend that you print a test envelope to make sure the print results are what you want.

Types of envelopes to avoid

IMPORTANT

DO NOT use envelopes:

- that are damaged, curled, wrinkled or an unusual shape
- that are extremely shiny or textured
- with clasps, staples, snaps or tie strings
- with self-adhesive closures
- that are of a baggy construction
- that are not sharply creased
- that are embossed (raised writing)
- that were previously printed by a laser or LED machine
- that are pre-printed on the inside
- that cannot be arranged neatly when stacked
- that are made of paper that weighs more than the paper weight specifications for the machine
- with edges that are not straight or consistently square
- with windows, holes, cut-outs or perforations
- with glue on the surface as shown in the figure below

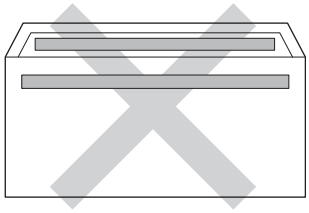

- with double flaps as shown in the figure below

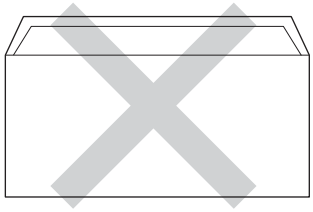

- with sealing flaps that are not folded down when purchased
- with each side folded as shown in the figure below

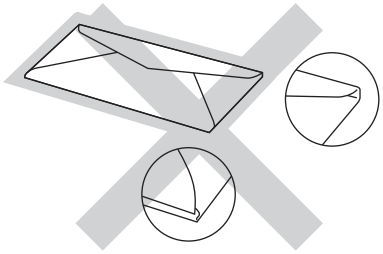

If you use any of the types of envelopes listed above, they may damage your machine. This damage may not be covered under any Brother warranty or service agreement.

Occasionally you may experience paper feed problems caused by the thickness, size and flap shape of the envelopes you are using.

Labels

The machine will print on most types of labels designed for use with a laser machine. Labels should have an adhesive that is acrylic-based since this material is more stable at the high temperatures in the fuser unit. Adhesives should not come in contact with any part of the machine, because the label stock may stick to the drum unit or rollers and cause jams and print quality problems. No adhesive should be exposed between the labels. Labels should be arranged so that they cover the entire length and width of the sheet. Using labels with spaces may result in labels peeling off and causing serious jams or print problems.

All labels used in this machine must be able to withstand a temperature of 392 °F (200 °C) for a period of 0.1 seconds.

Labels can only be fed through the multi-purpose tray.

Types of labels to avoid

Do not use labels that are damaged, curled, wrinkled or an unusual shape.

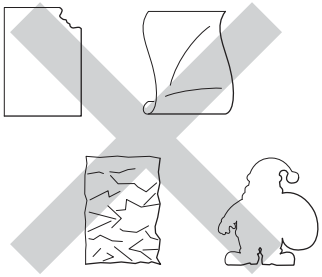

IMPORTANT

- Avoid feeding labels with the carrier sheet exposed because your machine will be damaged.
- DO NOT reuse or insert labels that have previously been used or are missing a few labels on the sheet.
- Label sheets should not exceed the paper weight specifications described in this User’s Guide. Labels exceeding this specification may not feed or print correctly and may cause damage to your machine.

3 Loading documents

How to load documents

You can send a fax, make copies, and scan from the ADF (Automatic Document Feeder) and the scanner glass.

Using the automatic document feeder (ADF)

The ADF can hold up to 35 pages (MFC-L8600CDW) or 50 pages (MFC-L8850CDW/MFC-L9550CDW) and feeds each sheet individually. Use standard 20 lb (80 g/m^2) paper and always fan the pages before putting them in the ADF.

Document Sizes Supported

Length:	5.8 to 14 in. (147.3 to 355.6 mm)
Width:	5.8 to 8.5 in. (147.3 to 215.9 mm)
Weight:	17 to 24 lb (64 to 90 g/m^2)

How to load documents

IMPORTANT

- DO NOT leave thick documents on the scanner glass. If you do this, the ADF may jam.
- DO NOT use paper that is curled, wrinkled, folded, ripped, stapled, paper-clipped, pasted or taped.
- DO NOT use cardboard, newspaper or fabric.
- To avoid damaging your machine while using the ADF, DO NOT pull on the document while it is feeding.

NOTE

- To scan documents that are not appropriate for the ADF, see *Using the scanner glass* on page 40.
- It is easier to use the ADF if you are loading a multiple page document.
- Make sure documents with correction fluid or written with ink are completely dry.

1. Unfold the ADF document support (1). Lift up and unfold the ADF document output support flap (2).

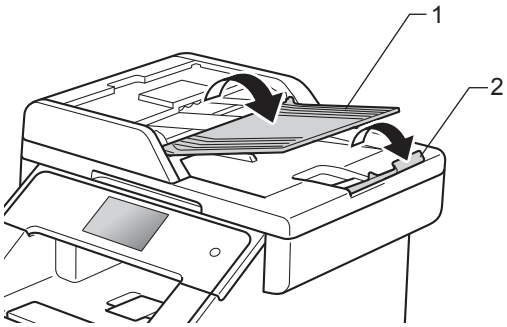

2. Fan the pages well.
3. Stagger the pages of your document *face up top edge first*, in the ADF until the Touchscreen displays `ADF Ready` and you feel the top page touch the feed rollers.

4 Adjust the paper guides (1) to fit the width of your document.

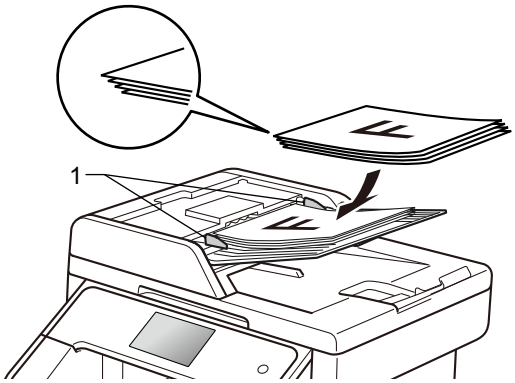

NOTE

To scan non-standard documents, see *Using the scanner glass* on page 40.

Using the scanner glass

You can use the scanner glass to fax, copy or scan pages of a book, one page at a time.

Document Sizes Supported

Length:	(MFC-L8600CDW) Up to 11.7 in. (297.0 mm) (MFC-L8850CDW and MFC-L9550CDW) Up to 14.0 in. (355.6 mm)
Width:	Up to 8.5 in. (215.9 mm)
Weight:	Up to 4.4 lb (2.0 kg)

How to load documents

NOTE

To use the scanner glass, the ADF must be empty.

1 Lift the document cover.

2 Using the document guidelines on the left and top, place the document *face down* in the upper left corner of the scanner glass.

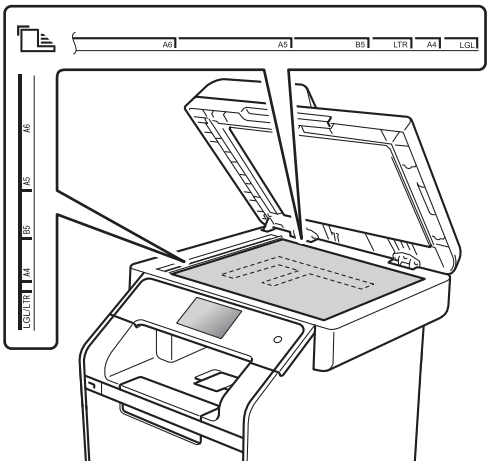

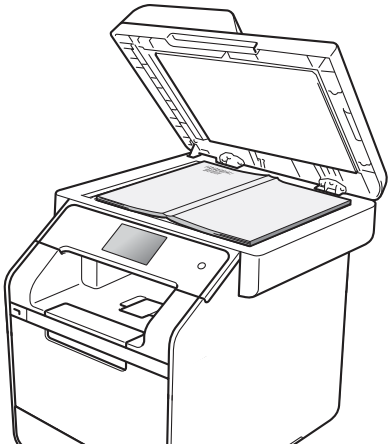

3 Close the document cover.

IMPORTANT

If the document is a book or is thick do not slam the cover or press on it.

4 Sending a fax

How to send a fax

The following steps explain how to send a fax. To send multiple pages use the ADF.

1. Do one of the following to load your document:
   - Place the document *face up* in the ADF (see *Using the automatic document feeder (ADF)* on page 39).
   - Load your document *face down* on the scanner glass (see *Using the scanner glass* on page 40).

2. Do one of the following:
   - When Fax Preview is set to `Off`, press `Fax`.
   - When Fax Preview is set to `On`, press `Fax` and `Sending Fax(es)`.

   - The Touchscreen shows:

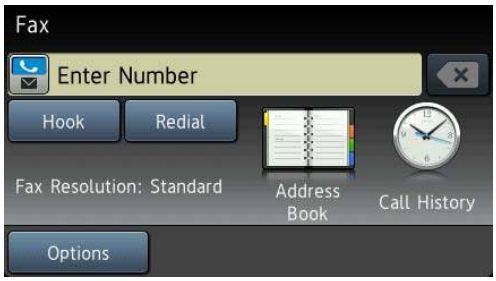

3. To change fax sending settings, press `Options`. Swipe up or down, or press ▲ or ▼ to scroll through the fax settings. When the setting you want is displayed, press it and choose your new option. When you have finished changing the options, press `OK`.

(Advanced User's Guide)

For the following advanced fax sending operations and settings, see Advanced User's Guide:

- `2-sided Fax` (MFC-L8850CDW and MFC-L9550CDW)
- `Contrast`
- `Fax Resolution`
- `Broadcasting`
- `Real Time TX`
- `Overseas Mode`
- `Delayed Fax`
- `Batch TX`
- `Coverpage Message`
- `Coverpage Setup`

4. (MFC-L8850CDW and MFC-L9550CDW) Choose one of the options below:
   - To send a 1-sided document, go to step ❺.
   - To send a 2-sided document, choose the 2-sided scanning format for your 2-sided document as follows:

     Press `Options`.

     Swipe up or down, or press ▲ or ▼ to display `2-sided Fax` and press `2-sided Fax`.

     Press `2-sided Scan: Long Edge` or `2-sided Scan: Short Edge`.

     Press `OK`.

NOTE

You can send 2-sided documents from the ADF.

5 Enter the fax number.

Using the dial pad
Using the Address Book

- Address Book

Using call history

- Call History

(For more information, see *How to dial* on page 62.)

6 Press Fax Start.

Faxing from the ADF

- The machine starts scanning the document.

Faxing from the scanner glass

If Real Time TX is On, the machine will send the document without asking if there are additional pages to scan.

- If you press Fax Start, the machine starts scanning the first page.

  When the Touchscreen displays Next Page?, do one of the following:

  - To send a single page, press No. The machine starts sending the document.
  - To send more than one page, press Yes and place the next page on the scanner glass. Press OK. The machine starts scanning the page. (Repeat this step for each additional page.)

Stop faxing

To stop faxing, press ✕.

Faxing A4/Legal/Folio size documents from the scanner glass

When faxing A4, Legal [1], or Folio [1] size documents, you must set the scan glass size to A4 or Legal/Folio [1] ; otherwise, a portion of your faxes will be missing.

1 Do one of the following:

- When Fax Preview is set to Off, press (Fax).
- When Fax Preview is set to On, press (Fax) and Sending Fax(es).

2 Press Options.

3 Swipe up or down, or press ▲ or ▼ to display Glass Scan Size.

4 Press Glass Scan Size.

5 Press A4 or Legal/Folio [1].

6 Press OK.

7 Press .

[1] MFC-L8850CDW and MFC-L9550CDW

Canceling a fax in process

Press ✕ to cancel the fax. If you press ✕ while the machine is dialing or sending, the Touchscreen will display Cancel Job?.

Press Yes to cancel the fax.

Transmission Verification Report

You can use the Transmission Verification Report as proof that you sent a fax. This report lists the receiving party's name or fax number, the time and date of transmission, duration of transmission, number of pages sent, and whether or not the transmission was successful.

There are several settings available for the Transmission Verification Report:

- `On`: Prints a report after every fax you send.
- `On+Image`: Prints a report after every fax you send. A portion of the fax's first page appears on the report.
- `Off`: Prints a report if your fax is unsuccessful due to a transmission error. `Off` is the factory setting.
- `Off+Image`: Prints a report if your fax is unsuccessful due to a transmission error. A portion of the fax's first page appears on the report.
- `No Report`: Does not print a report at all.

1. Press .
2. Press `All Settings`.
3. Swipe up or down, or press ▲ or ▼ to display `Fax`.
4. Press `Fax`.
5. Swipe up or down, or press ▲ or ▼ to display `Report Setting`.
6. Press `Report Setting`.
7. Press `Transmission`.
8. Press `On`, `On+Image`, `Off` , `Off+Image` or `No Report`.
9. Press .

NOTE

- If you choose `On+Image` or `Off+Image`, the image will not appear on the Transmission Verification Report if Real Time Transmission is set to `On`.
- If the transmission is successful, `OK` will appear next to `RESULT` on the Transmission Verification Report.
  If the transmission is not successful, `NG`will appear next to `RESULT`.

5 Receiving a fax

Receive modes

NOTE

You can use four sizes of paper for printing faxes: Letter, A4, Legal or Folio.

Choose the correct Receive Mode

The correct Receive Mode is determined by the external devices and telephone subscriber services (Voice Mail, Distinctive Ring, etc.) you will be using on the same line as the Brother machine.

Will you be using a Distinctive Ring number for receiving faxes?

Brother uses the term "Distinctive Ring" but different telephone companies may have other names for this service such as Custom Ringing, RingMaster, Personalized Ring, Teen Ring, Ident-A-Ring, Ident-A-Call, Data Ident-A-Call, Smart Ring and SimpleBiz Fax & Alternate Number Ringing (see *Distinctive Ring* on page 55 for instructions on setting up your machine using this feature).

Will you be using Voice Mail on the same telephone line as your Brother machine?

If you have Voice Mail on the same telephone line as your Brother machine, there is a strong possibility that Voice Mail and the Brother machine will conflict with each other when receiving incoming calls (see *Voice Mail* on page 54 for instructions on setting up your machine using this service).

Will you be using a Telephone Answering Device on the same telephone line as your Brother machine?

Your external telephone answering device (TAD) will automatically answer every call. Voice messages are stored on the external TAD and fax messages are printed. Choose `External TAD` as your receive mode (see *Connecting an external TAD (telephone answering device)* on page 57).

Will you be using your Brother machine on a dedicated fax line?

Your machine automatically answers every call as a fax. Choose `Fax` as your receive mode (see *Fax Only* on page 46).

Will you be using your Brother machine on the same line as your telephone?

Do you want to receive voice calls and faxes automatically?

The `Fax/Tel` receive mode is used when sharing the Brother machine and your telephone on the same line. Choose `Fax/Tel` as your receive mode (see *Fax/Tel* on page 46).

Important Note: You can not receive voice messages on either Voice Mail or an answering machine if you choose the `Fax/Tel` mode.

Do you expect to receive very few faxes?

Choose `Manual` as your receive mode. You control the telephone line and must answer every call yourself (see *Manual* on page 46).

To set the receive mode follow the instructions below:

1. Press .
2. Press `All Settings`.
3. Swipe up or down, or press ▲ or ▼ to display `Fax`.
4. Press `Fax`.
5. Swipe up or down, or press ▲ or ▼ to display `Setup Receive`.
6. Press `Setup Receive`.
7. Swipe up or down, or press ▲ or ▼ to display `Receive Mode`.
8. Press `Receive Mode`.

NOTE

If you cannot change the `Receive Mode`, make sure the Distinctive Ring feature is set to `Off` (see *Distinctive Ring* on page 55).

9. Press `Fax`, `Fax/Tel`, `External TAD` or `Manual`.
10. Press .

Using receive modes

Some receive modes answer automatically (Fax and Fax/Tel). You may want to change the Ring Delay before using these modes (see *Ring Delay* on page 47).

Fax Only

Fax mode will automatically answer every call as a fax.

Fax/Tel

Fax/Tel mode helps you manage incoming calls, by recognizing whether they are fax or voice calls and handling them in one of the following ways:

- Faxes will be automatically received.
- Voice calls will start the F/T ring to tell you to pick up the line. The F/T ring is a fast pseudo/double-ring made by your machine.

(Also see *F/T Ring Time (Fax/Tel mode only)* on page 47 and *Ring Delay* on page 47.)

Manual

Manual mode turns off all automatic answering functions unless you are using the Distinctive Ring Receive feature.

To receive a fax in Manual mode lift the handset of the external telephone or press (Fax) and then press Hook. When you hear fax tones (short repeating beeps), press Fax Start, and then press Receive to receive a fax. You can also use the Easy Receive feature to receive faxes by lifting a handset on the same line as the machine.

(Also see *Easy Receive* on page 48.)

External TAD

External TAD mode lets an external answering device manage your incoming calls. Incoming calls will be handled in the following ways:

- Faxes will be automatically received.
- Voice callers can record a message on the external TAD.

(For more information, see *Connecting an external TAD (telephone answering device)* on page 57.)

Receive Mode settings

Ring Delay

The Ring Delay setting sets the number of times the machine rings before it answers in `Fax` and `Fax/Tel` modes.

If you have external or extension telephones on the same line as the machine, keep the Ring Delay setting of 4 (see *Using external and extension telephones* on page 60 and *Easy Receive* on page 48).

1. Press .
2. Press `All Settings`.
3. Swipe up or down, or press ▲ or ▼ to display `Fax`.
4. Press `Fax`.
5. Swipe up or down, or press ▲ or ▼ to display `Setup Receive`.
6. Press `Setup Receive`.
7. Swipe up or down, or press ▲ or ▼ to display `Ring Delay`.
8. Press `Ring Delay`.
9. Press `0`, `1`, `2`, `3` or `4` for how many times you want the line to ring before the machine answers.
10. Press .

NOTE

If you choose `0`, the machine will answer immediately and the line will not ring at all.

F/T Ring Time (Fax/Tel mode only)

When somebody calls your machine, you and your caller will hear the normal telephone ring sound. The number of rings is set by the Ring Delay setting.

If the call is a fax, then your machine will receive it; however, if it is a voice call the machine will sound the F/T ring (pseudo/double-ring) for the time you set in the F/T Ring Time setting. If you hear the F/T ring it means that a voice caller is on the line.

Because the F/T ring is made by the machine, extension and external telephones will *not* ring; however, you can still answer the call on any telephone (for more information, see *Using Remote Codes* on page 61).

1. Press .
2. Press `All Settings`.
3. Swipe up or down, or press ▲ or ▼ to display `Fax`.
4. Press `Fax`.
5. Swipe up or down, or press ▲ or ▼ to display `Setup Receive`.
6. Press `Setup Receive`.
7. Swipe up or down, or press ▲ or ▼ to display `F/T Ring Time`.
8. Press `F/T Ring Time`.
9. Press how long the machine will ring to alert you that you have a voice call (20, 30, 40 or 70 seconds).
10. Press .

NOTE

Even if the caller hangs up during the pseudo/double-ringing, the machine will continue to ring for the set time.

Easy Receive

If Easy Receive is On:

The machine can receive a fax automatically, even if you answer the call. When you see Receiving on the Touchscreen or hear a click on the phone line through the handset you are using, just replace the handset. Your machine will do the rest.

If Easy Receive is Off:

If you are at the machine and answer a fax call first by lifting the external handset, then press Fax Start, and then press Receive to receive the Fax.

If you answered at an extension telephone press ∗**51** (see *Using external and extension telephones* on page 60).

NOTE

- If this feature is set to On, but your machine does not connect a fax call when you lift an extension telephone handset, press the fax receive code ∗**51**.
- If you send faxes from a computer on the same telephone line and the machine intercepts them, set Easy Receive to Off.

1. Press .
2. Press All Settings.
3. Swipe up or down, or press ▲ or ▼ to display Fax.
4. Press Fax.
5. Swipe up or down, or press ▲ or ▼ to display Setup Receive.
6. Press Setup Receive.
7. Swipe up or down, or press ▲ or ▼ to display Easy Receive.
8. Press Easy Receive.
9. Press On (or Off).
10. Press .

Fax Preview (Black and White only)

How to preview a received fax

You can view received faxes on the Touchscreen by pressing (Fax) and then (Received Faxes). When the machine is in Ready mode, a pop-up message will appear on the Touchscreen to alert you of new faxes.

Setting Fax Preview

1. Press .
2. Press (Fax Preview).
3. Press On (or Off).
4. Press Yes.
5. The Touchscreen will tell you that any future faxes will not be printed as you receive them.
   Press Yes.
6. Press .

NOTE

When Fax Preview is turned on, a backup copy of received faxes will not be printed for Fax Forwarding and PC-FAX Receiving operations, even if you set Backup Print to On.

Using Fax Preview

When you receive a fax, you will see a pop-up message on the Touchscreen. (For example: New Fax(es):01 [View])

1. Press View.
   The Touchscreen displays the fax list.

NOTE

- Although printed faxes show the received date and time when Fax Receive Stamp is turned on, the Fax Preview screen will not display the received date and time.
- The fax list includes the old faxes and the new fax. The new fax is indicated by a blue mark next to the fax.
- To see a fax that has already been previewed, press Fax and Received Faxes.

2. Swipe up or down, or press ▲ or ▼ to display the fax number of the fax you want.
3. Press the fax you want.

NOTE

- If your fax is large there may be a delay before it is displayed.
- The Touchscreen displays the current page number and total pages of the fax message. When your fax message is over 99 pages the total number of pages will be shown as “XX.”

Press the Touchscreen or Touchpanel to perform the following operations.

	Description
	Enlarge the fax.
	Reduce the fax.
▲ or ▼	Scroll vertically.
◄ or ►	Scroll horizontally.
	Rotate the fax clockwise.
	Delete the fax. Press `Yes` to confirm.
	Go back to the previous page.
	Go to the next page.
	Go back to the fax list.
`Start`	Print the fax.

4 Press .

How to print a fax

1 Press (`Fax`).

2 Press `Received Faxes`.

3 Press the fax you want.

4 Press `Start` to confirm the fax to print.

5 Do one of the following:

- Press `Print All Pages` to print all pages.
- Press `Print Displayed Only` to print the displayed page only.
- Press `Print From Displayed` to print from the displayed page to the last page.

6 When the Touchscreen displays `Delete all pages?`, do one of the following:

- Press `Yes` to delete all pages of the fax you have printed.
- Press `No` to save the fax you have printed.

7 Press .

How to print or delete all faxes in the list

1 Press (`Fax`).

2 Press `Received Faxes`.

3 Press `Print/Delete`.

4 Do one of the following:

- Press `Print All:New Fax(es)` to print all faxes you have not yet viewed.
- Press `Print All(Old Faxes)` to print all faxes you have viewed.
- Press `Delete All:New Fax(es)` to delete all faxes you have not yet viewed.

  Press `Yes` to confirm.
- Press `Delete All(Old Faxes)` to delete all faxes you have viewed.

  Press `Yes` to confirm.

5 Press .

Turning off Fax Preview

1. Press .
2. Press (`Fax Preview`).
3. Press `Off`.
4. Press `Yes` to confirm.
5. If there are faxes stored in the memory, do one of the following:
   - If you do not want to print the stored faxes, press `Continue`.

     Press `Yes` to confirm. Your faxes will be deleted.
   - To print all the stored faxes, press `Print All Faxes Before Delete`.
   - If you do not want to turn off Fax Preview, press `Cancel`.
6. Press .

6 Using PC-FAX

How to use PC-FAX

PC-FAX Receive (Windows® only)

If you turn on the PC-FAX Receive feature your MFC will store received faxes in memory and send them to your computer automatically. You can then use your computer to view and store these faxes.

Even if you turn off your computer (at night or on the weekend, for example), your MFC will receive and store your faxes in its memory. The number of received faxes that are stored in the memory will appear on the Touchscreen.

When you start your computer and the PC-FAX Receiving software runs, your MFC transfers your faxes to your computer automatically.

For PC-FAX Receive to work the PC-FAX Receiving software must be running on your computer.

Do one of the following:

- (Windows® XP, Windows Vista® and Windows® 7)

  From the (**Start**) menu, select **All Programs** > **Brother** > **Brother Utilities**.
  Click the drop-down list and select your model name (if not already selected).
  Click **PC-FAX Receive** in the left navigation bar, and then click **Receive**.

- (Windows® 8)

  Click (**Brother Utilities**), and then click the drop-down list and select your model name (if not already selected).
  Click **PC-FAX Receive** in the left navigation bar, and then click **Receive**.

If you choose Backup Print On, the machine will also print the fax.

1. Press .
2. Press `All Settings`.
3. Swipe up or down, or press ▲ or ▼ to display `Fax`.
4. Press `Fax`.
5. Swipe up or down, or press ▲ or ▼ to display `Setup Receive`.
6. Press `Setup Receive`.
7. Swipe up or down, or press ▲ or ▼ to display `PC Fax Receive`.
8. Press `PC Fax Receive`.
9. Press `On` to start the PC-FAX Receiving.
10. The Touchscreen displays a reminder to start the PC-FAX Receiving program on your computer. If you have started the PC-FAX Receiving program, press `OK`. For more information about how to start the PC-FAX Receiving program, see Software and Network User's Guide.
11. Swipe up or down, or press ▲ or ▼ to display `<USB>` or your computer name if the machine is connected to a network. Press `<USB>` or your computer name. Press `OK`.
12. Press `Backup Print: On` or `Backup Print: Off`.

IMPORTANT

If you choose `Backup Print: On`, the machine will also print the fax at your machine so you will have a copy.

13 Press .

NOTE

- Before you can set up PC-FAX Receive you must install the MFL-Pro Suite software on your computer. Make sure your computer is connected and turned on (see Software and Network User's Guide).
- If your machine has an error and is unable to print faxes from memory, you can use this setting to transfer your faxes to a computer (see *Transferring your faxes or Fax Journal report* on page 120).
- PC-FAX Receive is not available for Mac OS.

PC-FAX Send

The Brother PC-FAX feature lets you use your computer to send a document from an application as a standard fax. You can send a file created in any application on your computer as a PC-FAX. You can even attach a cover page (for more information, see Software and Network User's Guide).

How to send a PC-FAX:

Contact your application vendor if you need more support.

1. From your application select **File**, and then **Print**.
   The Print dialog box will be displayed. (The steps may vary depending on your application.)
2. Select **Brother PC-FAX v.3**.
3. Click **OK**.
   The **Brother PC-FAX** user interface will be displayed.
4. Enter the recipient's fax number using your computer keyboard or by clicking the numeric keypad of the **Brother PC-FAX** user interface. You can also select a stored number from the **Address Book**.
5. Click .
6. Click **Start**.
   Your document will be sent to the Brother machine and then faxed to the recipient.

7 Telephone services and external devices

Telephone line services

Voice Mail

If you have Voice Mail on the same telephone line as your Brother machine, Voice Mail and the Brother machine will conflict with each other when receiving incoming calls.

For example, if your Voice Mail is set to answer after 4 rings and your Brother machine is set to answer after 2 rings, then your Brother machine will answer first. This will prevent callers from being able to leave a message in your Voice Mail.

Similarly, if your Brother machine is set to answer after 4 rings and your Voice Mail is set to answer after 2 rings, then your Voice Mail will answer first. This will prevent your Brother machine from being able to receive an incoming fax, since Voice Mail cannot transfer the incoming fax back to the Brother machine.

To avoid conflicts between your Brother machine and your Voice Mail service, do one of the following:

Get the Distinctive Ring service from your telephone company. Distinctive Ring is a feature of your Brother machine that allows a person with one line to receive fax and voice calls through two different telephone numbers on that one line. Brother uses the term 'Distinctive Ring,' but telephone companies market the service under a variety of names, such as Custom Ringing, Personalized Ring, Smart Ring, RingMaster, Ident-A-Ring, Ident-A-Call, Data Ident-A-Call, Teen Ring, and SimpleBiz Fax & Alternate Number Ringing. This service establishes a second telephone number on the same line as your existing telephone number, and each number has its own ring pattern. Typically, the original number rings with the standard ring pattern and is used for receiving voice calls, and the second number rings with a different ring pattern and is used for receiving faxes (see *Distinctive Ring* on page 55).

OR

Set your Brother machine's Receive Mode to "Manual". Manual Mode requires that you answer every incoming call if you want to be able to receive a fax. If the incoming call is a telephone call, then complete the call as you normally would. If you hear fax sending tones you must transfer the call to the Brother machine (see *Using external and extension telephones* on page 60). Unanswered fax and voice calls will go to your Voice Mail. (To set the machine in **MANUAL** Mode, see *Choose the correct Receive Mode* on page 44.)

Distinctive Ring

Distinctive Ring is a function of your Brother machine that allows a person with one line to receive fax and voice calls through two different phone numbers on that one line. Brother uses the term "Distinctive Ring," but telephone companies market the service under a variety of names, such as Smart Ring, Ring Master or Ident-a-Ring. This service establishes a second telephone number on the same line as your existing telephone number, and each number has its own ring pattern. Typically, the original number rings with the standard ring pattern and is used for receiving voice calls, and the second number rings with a different ring pattern and is used for receiving faxes.

NOTE

- You must pay for your telephone company's Distinctive Ring service before you program the machine to work with it.
- Call your telephone company for availability and rates.

What does your telephone company's 'Distinctive Ring' do?

Your telephone company's Distinctive Ring service allows you to have more than one number on the same telephone line. **If you need more than one telephone number, it is cheaper than paying for an extra line.** Each telephone number has its own Distinctive Ring pattern, so you will know which telephone number is ringing. This is one way to have a separate telephone number for your machine.

NOTE

Call your telephone company for availability and rates.

What does Brother's 'Distinctive Ring' do?

The Brother machine has a Distinctive Ring feature that allows you to use your machine to take full advantage of the telephone company's Distinctive Ring service. The new telephone number on your line can just receive faxes.

NOTE

You must pay for your telephone company's Distinctive Ring service before you program the machine to work with it.

Do you have Voice Mail?

If you have Voice Mail on the telephone line that you will install your new machine on, *there is a strong possibility that Voice Mail and the machine will conflict with each other while receiving incoming calls.* **However, the Distinctive Ring feature allows you to use more than one number on your line, so both Voice Mail and the machine can work together without any problems.** If each one has a separate telephone number, neither will interfere with the other's operations.

If you decide to get the Distinctive Ring service from the telephone company, you must follow the directions below to register the new Distinctive Ring pattern they give you. This is so your machine can recognize its incoming calls.

NOTE

You can change or cancel the Distinctive Ring pattern at any time. You can switch it off temporarily, and turn it back on later. When you get a new fax number, make sure you reset this feature.

Before you choose the ring pattern to register

You can only register one Distinctive Ring pattern with the machine. Some ring patterns cannot be registered. The ring patterns below are supported by your Brother machine. Register the one your telephone company gives you.

Ring Pattern	Rings	
1	short-short or long-long	
2	short-long-short	
3	short-short-long	
4	very long (normal pattern)	

NOTE

- Ring Pattern #1 is often called Short-Short and is the most commonly used.
- If the ring pattern you received is not on this chart, **call your telephone company and ask for one that is shown**.

- The machine will only answer calls to its registered number.
- The first two rings are silent on the machine. This is because the fax must <<listen>> to the ring pattern (to compare it to the pattern that was 'registered'). (Other telephones on the same line will ring.)
- If you program the machine correctly, it will recognize the registered ring pattern of the 'fax number' within 2 ring patterns and then answer with a fax tone. When the 'voice number' is called, the machine will not answer.

Registering the Distinctive Ring pattern Very important!

After you set the Distinctive Ring feature to On, your Distinctive Ring number will receive faxes automatically. The receive mode is automatically set to Manual and you cannot change it to another receive mode while Distinctive Ring is set to On. This ensures the Brother machine will only answer the Distinctive Ring number and not interfere when your main telephone number is called.

When Distinctive Ring is on, the Touchscreen displays D/R as the Receive Mode.

1. Press .
2. Press All Settings.
3. Swipe up or down, or press ▲ or ▼ to display Fax.
4. Press Fax.
5. Swipe up or down, or press ▲ or ▼ to display Miscellaneous.
6. Press Miscellaneous.
7. Press Distinctive.
8. Do one of the following:
   - If you have not registered the Distinctive Ring, press Distinctive, and then press On. Go to step ❾.
   - If you have already registered the Distinctive Ring, and want to change the pattern, go to step ❾.
9. Press Ring Pattern.
10. Press the stored ring pattern you want. Press OK.
    (You will hear each pattern as you press the four buttons. Make sure you choose the pattern that the telephone company gave you.)
11. Press .
    Distinctive Ring is now set to On.

Turning off Distinctive Ring

1. Press .
2. Press `All Settings`.
3. Swipe up or down, or press ▲ or ▼ to display `Fax`.
4. Press `Fax`.
5. Swipe up or down, or press ▲ or ▼ to display `Miscellaneous`.
6. Press `Miscellaneous`.
7. Press `Distinctive`.
8. Press `Distinctive`.
9. Press `Off`.
10. Press .

NOTE

If you do not want to receive faxes on your Distinctive Ring number, you can turn off Distinctive Ring. The machine will stay in `Manual` receive mode so you must set the Receive Mode again (see *Choose the correct Receive Mode* on page 44).

Connecting an external TAD (telephone answering device)

You can connect an external Telephone Answering Device (TAD) to the same line as your machine. When the TAD answers a call, your machine will “listen” for the CNG (fax calling) tones sent by a sending fax machine. If it hears them it will take over the call and receive the fax. If it does not hear them, it will let your TAD take a voice message and the Touchscreen will display `Telephone`.

The external TAD must answer within four rings (we recommend you set it to two rings). This is because your machine cannot hear the CNG tones until the external TAD has picked up the call. The sending machine will send CNG tones for only eight to ten seconds longer. We do not recommend using the toll saver feature on your external TAD if it needs more than four rings to activate it.

Unless you are using Distinctive Ring, the TAD must be connected to the EXT. jack of the machine.

- **If you subscribe to your telephone company’s Distinctive Ring service:**

  You may connect an external TAD to a separate wall jack only if you subscribe to your telephone company’s Distinctive Ring service, have registered the Distinctive Ring pattern on your machine, and use that number as a fax number. The recommended setting is at least four rings on the external TAD when you have the telephone company’s Distinctive Ring service. You cannot use the Toll Saver setting.

■ **If You Do Not Subscribe to the Distinctive Ring Service:**

You must plug your TAD into the EXT. jack of your machine. If your TAD is plugged into a wall jack, both your machine and the TAD will try to control the telephone line. (See the illustration below.)

■ Before you connect an external TAD (telephone answering device), remove the protective cap (2) from the EXT. jack on the machine.

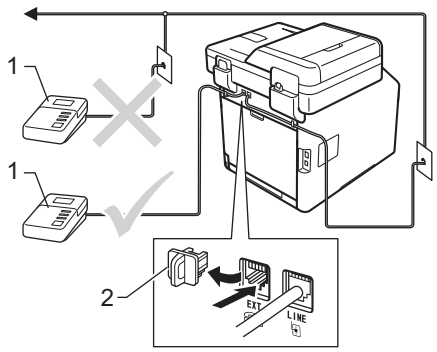

1 TAD

2 Protective Cap

NOTE

If you have problems receiving faxes, reduce the Ring Delay setting on your external TAD.

Connections

The external TAD must be plugged into the back of the machine, into the jack labeled EXT. Your machine cannot work correctly if you plug the TAD into a wall jack (unless you are using Distinctive Ring).

1. Plug the telephone line cord from the telephone wall jack into the back of the machine, in the jack labeled LINE.
2. Plug the telephone line cord from your external TAD into the back of the machine, in the jack labeled EXT. (Make sure this cord is connected to the TAD at the TAD's telephone line jack, and not its handset jack.)
3. Set your external TAD to four rings or less. (The machine's Ring Delay setting does not apply.)
4. Record the outgoing message on your external TAD.
5. Set the TAD to answer calls.
6. Set the Receive Mode on your machine to `External TAD` (see *Choose the correct Receive Mode* on page 44).

Recording an outgoing message (OGM)

1. Record 5 seconds of silence at the beginning of your message. This allows your machine time to listen for fax tones.
2. Limit your speaking to 20 seconds.
3. End your 20-second message by giving your Fax Receive Code for people sending manual faxes. For example: “After the beep, leave a message or press ∗51 and Start to send a fax.”

NOTE

We recommend beginning your OGM with an initial 5 second silence because the machine cannot hear fax tones over a loud voice. You may try leaving out this pause, but if your machine has trouble receiving faxes, then you should re-record the OGM to include it.

Multi-line connections (PBX)

We suggest you ask the company who installed your PBX to connect your machine. If you have a multi line system we suggest you ask the installer to connect the unit to the last line on the system. This prevents the machine being activated each time the system receives telephone calls. If all incoming calls will be answered by a switchboard operator we recommend that you set the Receive Mode to `Manual`.

We cannot guarantee that your machine will operate correctly under all circumstances when connected to a PBX. Any difficulties with sending or receiving faxes should be reported first to the company who handles your PBX.

External and extension telephones

Connecting an external or extension telephone

You can connect a separate telephone directly to your machine as shown in the diagram below.

Connect the telephone line cord to the jack labeled EXT.

Before you connect an external telephone, remove the protective cap (3) from the EXT. jack on the machine.

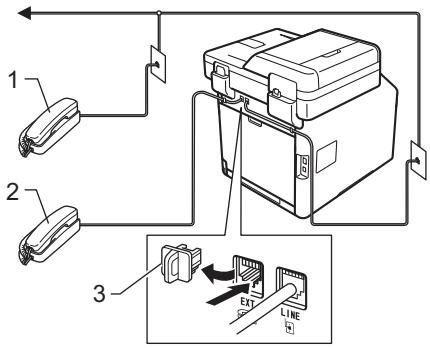

1 Extension telephone

2 External telephone

3 Protective Cap

Using external and extension telephones

Using extension telephones

If you answer a fax call at an extension telephone, you can make your machine receive the fax by pressing the Fax Receive Code ∗**51**.

If the machine answers a voice call and pseudo/double-rings for you to take over, you can take the call at an extension telephone by pressing the Telephone Answer Code **#51** (see *F/T Ring Time (Fax/Tel mode only)* on page 47).

Using an external telephone (Connected to the EXT. jack of the machine)

If you answer a fax call at the external telephone connected to the EXT. jack of the machine, you can make the machine receive the fax by pressing `Fax Start` and choosing `Receive`.

If the machine answers a voice call and pseudo/double-rings for you to take over, you can take the call at the external telephone by pressing `Pickup`.

If you answer a call and no one is on the line:

You should assume that you're receiving a manual fax.

Press ∗**51** and wait for the chirp or until the Touchscreen displays `Receiving`, and then hang up.

NOTE

You can also use the Easy Receive feature to make your machine automatically take the call (see *Easy Receive* on page 48).

Using a non-Brother cordless external handset

If your non-Brother cordless telephone is connected to the EXT. jack of the machine(see page 59) and you typically carry the cordless handset elsewhere, it is easier to answer calls during the Ring Delay.

If you let the machine answer first, you must go to the machine so you can press `Pickup` to transfer the call to the cordless handset.

Using Remote Codes

Fax Receive Code

If you answer a fax call on an extension telephone, you can tell your machine to receive it by pressing the Fax ReceiveCode ∗**51**. Wait for the chirping sounds then replace the handset (see *Easy Receive* on page 48).

If you answer a fax call at the external telephone, you can make the machine receive the fax by pressing `Fax Start` and then pressing `Receive`.

Telephone Answer Code

If you receive a voice call and the machine is in F/T mode, it will start to sound the F/T ring (pseudo/double-ring) after the initial ring delay. If you pick up the call on an extension telephone you can turn the F/T ring off by pressing **#51** (make sure you press this *between* the rings).

If the machine answers a voice call and pseudo/double-rings for you to take over, you can take the call at the external telephone by pressing `Pickup`.

Changing the Remote Codes

The preset Fax Receive Code is ∗**51**. The preset Telephone Answer Code is **#51**. If you are always disconnected when accessing your External TAD, try changing the three-digit remote codes, for example **###** and 999.

1. Press .
2. Press `All Settings`.
3. Swipe up or down, or press ▲ or ▼ to display `Fax`.
4. Press `Fax`.
5. Swipe up or down, or press ▲ or ▼ to display `Setup Receive`.
6. Press `Setup Receive`.
7. Swipe up or down, or press ▲ or ▼ to display `Remote Codes`.
8. Press `Remote Codes`.
9. Do one of the following:
   - If you want to change the Fax Receive Code, press `Fax Receive Code`. Enter the new code, and then press `OK`.
   - If you want to change the Telephone Answer Code, press `Tel Answer`. Enter the new code, and then press `OK`.
   - If you do not want to change the Codes, go to step ❿.
   - If you want to turn the Remote Codes `Off` (or `On`), press `Remote Codes`. Press `Off` (or `On`).
10. Press .

8 Dialing and storing numbers

How to dial

You can dial in any of the following ways.

Manual dialing

1. Load your document.
2. Do one of the following:
   - When Fax Preview is set to `Off`, press (`Fax`).
   - When Fax Preview is set to `On`, press (`Fax`) and `Sending Fax(es)`.
3. Press all digits of the fax number.

4. Press `Fax Start`.

Dialing from the Address Book

1. Load your document.
2. Press (`Fax`).
3. Press `Address Book`.
4. Do one of the following:
   - Swipe up or down, or press ▲ or ▼ to display the number you want.
   - Press , and then enter the first letter of the name and press `OK`.
5. Press the number or the name you want.
6. To send a fax, press `Apply`.
7. Press `Fax Start`.
   The machine scans and sends the fax.

LDAP search

If the machine is connected to your LDAP server, you can search for information such as fax numbers and E-mail addresses from your server. (See Software and Network User's Guide)

Fax redial

If you are sending a fax automatically and the line is busy, the machine will automatically redial one time after five minutes.

The automatic redial only works when you set `Auto Redial` to `On`. The default setting is `On`.

If you are sending a fax manually and the line is busy, press `Hook` and then `Redial`, wait for the other fax machine to answer, and then press `Fax Start` to try again. If you want to make a second call to the last number dialed, you can save time by pressing `Redial` and `Fax Start`.

`Redial` only works if you dialed from the machine.

Storing numbers

You can set up your machine to do the following types of easy dialing: Address Book and Groups for broadcasting faxes. When you dial an Address Book number, the Touchscreen displays the number.

NOTE

If you lose electrical power, the Address Book numbers that are in the memory will not be lost.

Storing a pause

Press `Pause` to insert a 3.5-second pause between numbers. You can press `Pause` as many times as needed to increase the length of the pause.

Storing Address Book numbers

You can store up to 300 addresses with a name.

1. Press (`Fax`).
2. Press `Address Book`.
3. Press `Edit`.
4. Press `Add New Address`.
5. Press `Name`.
6. Enter the name using the keyboard on the machine's Touchscreen (up to 15 characters). (To help you enter letters, see *Entering text* on page 210.)
   Press `OK`.
7. Press `Address`.
8. Enter the fax or telephone number using the keyboard on the machine's Touchscreen (up to 20 digits).
   Press `OK`.

NOTE

If you downloaded Internet Fax:

If you want to store an E-mail address to use with Internet Fax or Scan to E-mail server, press and enter the E-mail address (see *Entering text* on page 210), and press `OK`.

9. Press `OK`.
10. Do one of the following:
    - To store another Address Book number, repeat steps ❸ - ❿.
    - To finish storing numbers, press .

8

Changing Address Book names or numbers

You can change or delete an Address Book name or number that has already been stored.

If the stored number has a scheduled job, such as a delayed fax or a fax forwarding number, it will be dimmed on the Touchscreen. You cannot select the number to make changes or to delete it unless you first cancel the scheduled job (see Advanced User's Guide).

1. Press (Fax).
2. Press Address Book.
3. Press Edit.
4. Do one of the following:
   - Press Change to edit the names or numbers. Go to step ❺.
   - Press Delete to display Delete. Delete numbers by pressing them to display a red check mark.

     Press OK.

     Press Yes to confirm. Go to step ❾.
5. Swipe up or down, or press ▲ or ▼ to display the number you want.
6. Press the number you want.
7. Do the following:
   - To change the name, press Name. Enter the new name (up to 15 characters) using the keyboard on the machine's Touchscreen. (To help you enter letters, see *Entering text* on page 210).

     Press OK.
   - To change the fax or telephone number, press Address. Enter the new fax or telephone number (up to 20 digits) using the keyboard on the machine's Touchscreen.

     Press OK.

NOTE

How to change the stored name or number:

To change a character, press ◀ or ▶ to position the cursor to highlight the incorrect character, and then press ⌫. Enter the new character or number.

8. Press OK to finish.
   To change another Address Book number, repeat steps ❸ - ❽.
9. Press .

9 Making copies

How to copy

The following steps explain the basic copy operation.

1. Do one of the following to load your document:
   - Place the document *face up* in the ADF (see *Using the automatic document feeder (ADF)* on page 39).
   - Load your document *face down* on the scanner glass (see *Using the scanner glass* on page 40).
2. Press the `Copy` button on the Touchscreen.

   - The Touchscreen displays:

1 No. of Copies
You can enter the number of copies by using the dial pad.

3. For multiple copies, enter the two-digit number (up to 99).
4. Press `Color Start` or `Black Start`.

Stop copying

To stop copying, press ✕.

Copy preset settings

You can copy with a variety of settings that are already set up for you in the machine simply by pressing them.

The following preset settings are available.

- `Receipt`
- `Normal`
- `2in1(ID)`
- `2in1`
- `2-sided(1⇒2)`
- `2-sided(2⇒2)` (MFC-L8850CDW and MFC-L9550CDW)
- `Paper Save`

1. Load your document.
2. Press (`Copy`).
3. Swipe left or right to display `Receipt`, `Normal`, `2in1(ID)`, `2in1`, `2-sided(1⇒2)`, `2-sided(2⇒2)` or `Paper Save`, and press the preset you want.
4. Enter the number of copies you want.
5. Do one of the following:
   - To change more settings, go to step ❻.
   - If you have finished changing settings, go to step ❿.
6. Press `Options`.

7. Swipe up or down, or press ▲ or ▼ to display the available settings, and then press the setting you want.

8. Swipe up or down, or press ▲ or ▼ to display the available options, and then press your new option. Repeat steps ❼ and ❽ for each setting you want.

NOTE

If you want to save the settings as a Shortcut, press `Save as Shortcut`.

9. Press `OK`.

10. Press `Color Start` or `Black Start`.

Copy Settings and Options

You can change the following copy settings.

(Basic User's Guide)

For details about changing the following settings, see *Paper settings* on page 31.

- `Tray Setting` (Paper Size and Type)
- `Tray Use: Copy`

Press `Copy` and then press `Options`. Swipe up or down, or press ▲ or ▼ to scroll through the copy settings. When the setting you want is displayed, press it and choose your option. When you have finished changing the options, press `OK`.

(Advanced User's Guide)

For more information about changing the following settings, see Advanced User's Guide:

- `Quality`
- `Enlarge/Reduce`
- `2-sided Copy`
- `Tray Use`
- `Density`
- `Contrast`
- `Stack/Sort`
- `Page Layout`
- `2in1(ID)`
- `Color Adjust`
- `2-sided Copy Page Layout` (MFC-L8850CDW and MFC-L9550CDW)
- `Remove Background Color`
- `Save as Shortcut`

10 Printing from a USB flash drive or digital camera supporting mass storage

With the Direct Print feature, you do not need a computer for printing. You can print by just plugging your USB flash drive into the machine's USB direct interface. You can also connect and print directly from a camera set to USB mass storage mode.

You can use a USB flash drive that has the following specifications:

USB Class	USB Mass Storage Class
USB Mass Storage Sub Class	SCSI or SFF-8070i
Transfer protocol	Bulk transfer Only
Format [1]	FAT12/FAT16/FAT32
Sector size	Max. 4096 Byte
Encryption	Encrypted devices are not supported.

[1] NTFS format is not supported.

NOTE

- Some USB flash drives may not work with the machine.
- If your camera is in PictBridge mode, you cannot print from it. See the documentation supplied with your camera to switch from PictBridge mode to mass storage mode.

Creating a PRN file for direct printing

NOTE

The screens in this section may vary depending on your application and operating system.

1. From the menu bar of an application, click **File**, then **Print**.
2. Choose **Brother MFC-XXXX Printer** (1) and check the **Print to file** box (2). Click **Print**.

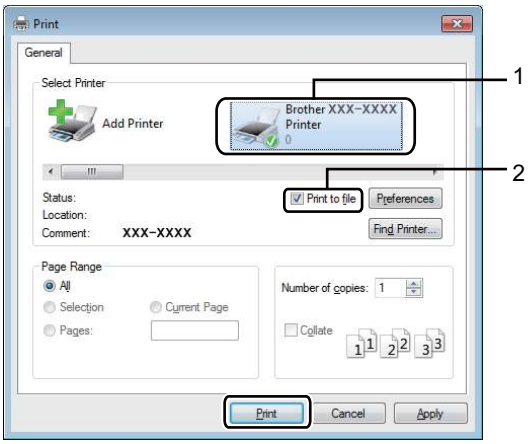

3. Choose the folder you want to save the file to and enter the file name if prompted.
   If you are prompted for a file name only, you can also specify the folder you want to save the file in by entering the directory name. For example: C:\Temp\FileName.prn
   If a USB flash drive is connected to your computer, you can save the file directly to the USB flash drive.

Printing directly from the USB flash drive or digital camera supporting mass storage

NOTE

- Make sure your digital camera is turned on.
- Your digital camera must be switched from PictBridge mode to mass storage mode.

1. Connect your USB flash drive or digital camera to the USB direct interface (1) on the front of the machine.
   The Touchscreen will automatically display the USB menu to confirm the USB flash drive or digital camera is correctly connected.

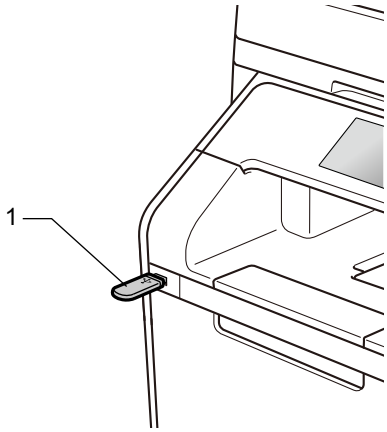

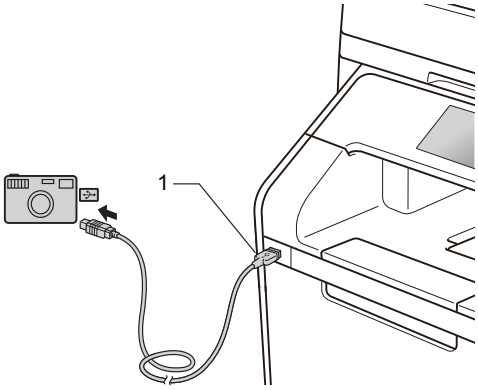

NOTE

- If an error occurs, the USB menu will not appear on the Touchscreen.
- When the machine is in Deep Sleep mode, the Touchscreen does not display any information even if you connect a USB flash drive to the USB direct interface. Press the Touchscreen to wake up the machine.
- To prevent damage to your machine, DO NOT connect any device other than a digital camera or USB flash drive to the USB direct interface.

2 Press Direct Print.

NOTE

If your machine has been set to Secure Function Lock On, you may not be able to access Direct Print (see Advanced User's Guide).

3 Swipe up or down, or press ▲ or ▼ to choose the folder name and file name you want.
If you have selected the folder name, swipe up or down, or press ▲ or ▼ to choose the file name you want.

NOTE

If you want to print an index of the files, press Index Print on the Touchscreen. Press Color Start or Black Start to start printing.

4 Do one of the following:

- Press Print Settings if you want to change them. Go to step ❺.
- If you do not want to change the current settings, go to step ❽.

5 Swipe up or down, or press ▲ or ▼ to display the setting you want.

6 Press the option you want.

NOTE

- You can choose the following settings:

  Paper Type

  Paper Size

  Multiple Page

  Orientation

  2-sided

  Collate

  Tray Use

  Print Quality

  PDF Option

- Depending on the file type, some of these settings may not appear.

7 Do one of the following:

- To change another setting, repeat step ❺.
- If you do not want to change other settings, press OK and go to step ❽.

8 Enter the number of copies you want using the touchpanel.

9 Press Color Start or Black Startto start printing.

IMPORTANT

DO NOT remove the USB flash drive or digital camera from the USB direct interface until the machine has finished printing.

10 Press .

Changing the default settings for direct print

You can change the default settings for Direct Print.

1. Connect your USB flash drive or digital camera to the USB direct interface on the front of the machine.
2. Press `Direct Print`.
3. Press `DefaultSettings`.
4. Swipe up or down, or press ▲ or ▼ to display the setting you want.
   Press the setting.
5. Press the new option you want.
6. Repeat steps ❹ and ❺ for each setting you want to change.
7. Press `OK`.
8. Press .

11 How to print from a computer

Printing a document

The machine can receive a document from your computer and print it. To print from a computer, you must install the printer driver.

(For more information about printer driver settings, see Software and Network User's Guide)

1. Install the Brother printer driver from the CD-ROM or Brother Solutions Center at http://solutions.brother.com/, (see Quick Setup Guide).
2. From your application, choose the Print command.
3. Choose the name of your machine in the **Print** dialog box and click **Properties** (or **Preferences**, depending on the application you are using).
4. Choose the settings you want to change in the **Properties** dialog box, and then click **OK**.
   - **Paper Size**
   - **Orientation**
   - **Copies**
   - **Media Type**
   - **Print Quality**
   - **Color / Mono**
   - **Document Type**
   - **Multiple Page**
   - **2-sided / Booklet**
   - **Paper Source**
5. Click **Print** to begin printing.

12 How to scan to a computer

Before scanning

To use the machine as a scanner, install a scanner driver. If the machine is on a network, configure it with a TCP/IP address.

- Install the scanner drivers from the CD-ROM or Brother Solutions Center at http://solutions.brother.com/, (see Quick Setup Guide).
- Configure the machine with a TCP/IP address if network scanning does not work (see Software and Network User's Guide).

Scanning a document as a PDF file using ControlCenter4 (Windows®)

(For Macintosh, see Software and Network User's Guide.)

NOTE

The screens on your computer may vary depending on your model.

ControlCenter4 is a software utility that lets you quickly and easily access the applications you use most often. Using ControlCenter4 eliminates the need to manually launch specific applications.

1. Load your document (see *How to load documents* on page 39).

2. Follow the instructions for the operating system you are using.

   - (Windows® XP, Windows Vista® and Windows® 7)

     Open ControlCenter4 by clicking (**Start**) > **All Programs** > **Brother** > **Brother Utilities**. Click the drop-down list and select your model name (if not already selected). Click **SCAN** in the left navigation bar, and then click **ControlCenter4**.The ControlCenter4 application will open.

   - (Windows® 8)

     Click (**Brother Utilities**), and then click the drop-down list and select your model name (if not already selected). Click **SCAN** in the left navigation bar, and then click **ControlCenter4**. The ControlCenter4 application will open.

3. If the ControlCenter4 Mode screen appears, choose the **Advanced Mode** and then click **OK**.

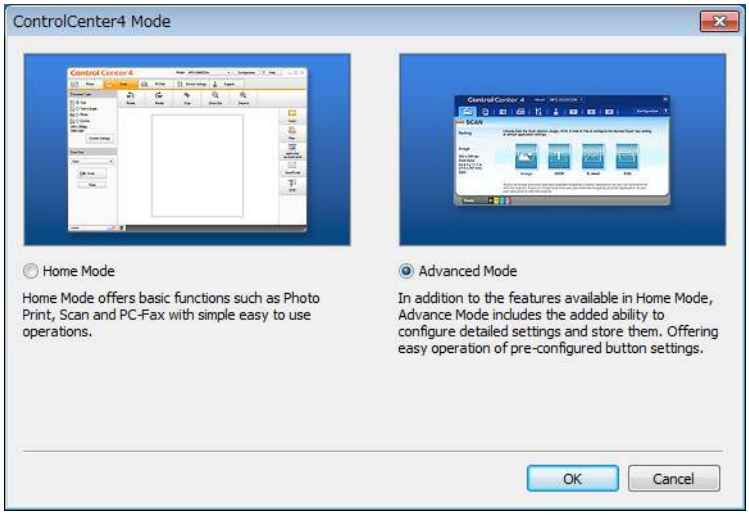

4. Make sure the machine you want to use is selected from the **Model** drop-down list.

5 Click **File**.

6 Press **Scan**.
The machine starts the scanning process. The folder where the scanned data is saved will open automatically.

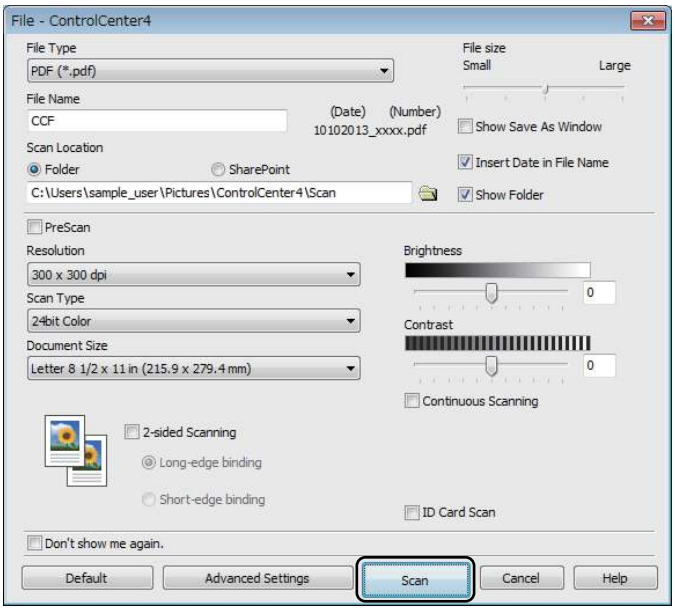

How to scan a document as a PDF file using the Touchscreen

1. Load your document (see *How to load documents* on page 39).
2. Press `Scan`.

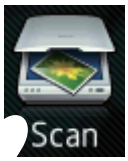

3. Swipe left or right to display `to File`.

   will be displayed in the center of the Touchscreen highlighted in blue.

4. Press `OK`.
   When the machine is connected to a network, press the computer name.
   Do one of the following:
   - If you want to use the default settings, go to step ❽.
   - If you want to change the default settings, go to step ❺.
5. Press `Options`. `Scan Settings` will change to `Set at Device`.
6. Choose the settings for `2-sided Scan`[1], `Scan Type`, `Resolution`, `File Type`, `Scan Size` and `Remove Background Color` as needed.
7. Press `OK`.
8. Press `Start`.
   The machine starts the scanning process.

[1] MFC-L8850CDW and MFC-L9550CDW

NOTE

The following scan modes are available.

- to USB
- to Network (Windows®)
- to FTP/SFTP
- to E-mail Server
- to E-mail
- to Image
- to OCR
- to File
- WS Scan [1] (Web Services Scan)

[1] Windows® only (Windows Vista® SP2 or later, Windows® 7 and Windows® 8
(See Software and Network User's Guide.)

A Routine maintenance

Replacing supplies

You must replace supplies when the machine indicates that the life of the supply is over. You can replace the following supplies yourself:

Using non-Brother supplies may affect the print quality, hardware performance, and machine reliability.

NOTE

- The drum unit and toner cartridge are two separate parts.
- The drum unit and toner cartridge are two separate supplies. Make sure both are installed. If the toner cartridge is placed in the machine without the drum unit, the message `Drum !` may be displayed.

Toner cartridge	Drum unit
See *Replacing the toner cartridges* on page 81. Order No. TN-331BK [1], TN-331C [1], TN-331M [1], TN-331Y [1], TN-336BK [1], TN-336C [1], TN-336M [1], TN-336Y [1], TN-339BK [2], TN-339C [2], TN-339M [2], TN-339Y [2] [1] Available for MFC-L8600CDW and MFC-L8850CDW [2] Available for MFC-L9550CDW	See *Replacing the drum unit* on page 90. Order No. DR-331CL
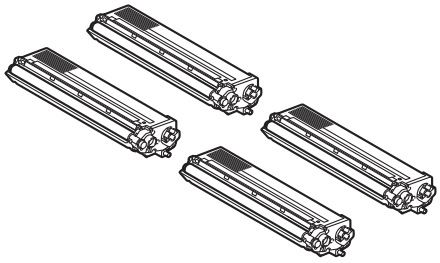	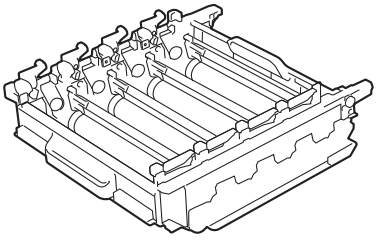
Belt unit	**Waste toner box**
See *Replacing the belt unit* on page 96. Order No. BU-320CL	See *Replacing the waste toner box* on page 101. Order No. WT-320CL
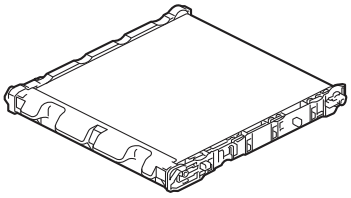	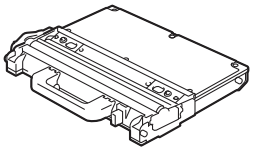

The messages in the table appear on the Touchscreen. These messages provide advanced warnings to replace the supply items before they reach end of life. To avoid any inconvenience, you may want to buy spare supply items before the machine stops printing.

Touchscreen messages	Supply to get ready	Approximate life	How to replace	Order No.
Toner Low: X	Toner cartridge X = BK, C, M, Y BK = Black C = Cyan M = Magenta Y = Yellow	<Black> 2,500 pages [1 2 5] 4,000 pages [1 2 6] 6,000 pages [1 2 7] <Cyan, Magenta, Yellow> 1,500 pages [1 2 5] 3,500 pages [1 2 6] 6,000 pages [1 2 7]	See page 81.	TN-331BK [5], TN-331C [5], TN-331M [5], TN-331Y [5], TN-336BK [6], TN-336C [6], TN-336M [6], TN-336Y [6], TN-339BK [7], TN-339C [7], TN-339M [7], TN-339Y [7]
Drum End Soon	Drum unit	25,000 pages [1 3 4]	See page 90.	DR-331CL
Belt End Soon	Belt unit	50,000 pages [1 8]	See page 96.	BU-320CL
WT Box End Soon	Waste toner box	50,000 pages [1]	See page 101.	WT-320CL

1 Letter or A4 size single-sided pages.

2 Approximate cartridge yield is declared in accordance with ISO/IEC 19798.

3 1 page per job

4 Drum life is approximate and may vary by type of use.

5 Standard toner cartridge

6 High yield toner cartridge

7 Super high yield toner cartridge

8 5 pages per job

You must clean the machine regularly and replace the supply items when the messages in the table are displayed on the Touchscreen.

Touchscreen messages	Supply to replace	Approximate life	How to replace	Order No.
Replace Toner	Toner cartridge The Touchscreen displays the toner cartridge color that you must replace. BK = Black C = Cyan M = Magenta Y = Yellow	<Black> 2,500 pages [1 2 5] 4,000 pages [1 2 6] 6,000 pages [1 2 7] <Cyan, Magenta, Yellow> 1,500 pages [1 2 5] 3,500 pages [1 2 6] 6,000 pages [1 2 7]	See page 81.	TN-331BK [5], TN-331C [5], TN-331M [5], TN-331Y [5], TN-336BK [6], TN-336C [6], TN-336M [6], TN-336Y [6], TN-339BK [7], TN-339C [7], TN-339M [7], TN-339Y [7]
Replace Drum	Drum unit	25,000 pages [1 3 4]	See page 90.	DR-331CL
Drum Stop	Drum unit			
Replace Belt	Belt unit	50,000 pages [1 8]	See page 96.	BU-320CL
Replace WT Box	Waste toner box	50,000 pages [1]	See page 101.	WT-320CL
Replace Fuser	Fuser unit	100,000 pages [1]	Contact Brother Customer Service or a Brother Authorized Service Center to replace the fuser unit. To replace the fuser unit contact Brother Customer Service at: 1-877-BROTHER (1-877-276-8437) **(in USA)** http://www.brother.ca/support **(in Canada)** or to locate a Brother Authorized Service Center, visit http://www.brother-usa.com/service/	
Replace PF Kit MP	Paper feeding kit	50,000 pages [1]	Contact Brother Customer Service or a Brother Authorized Service Center to replace the paper feeding kit. To replace the paper feeding kit contact Brother Customer Service at: 1-877-BROTHER (1-877-276-8437) **(in USA)** http://www.brother.ca/support **(in Canada)** or to locate a Brother Authorized Service Center, visit http://www.brother-usa.com/service/	
Replace PF Kit1	Paper feeding kit	100,000 pages [1]		
Replace PF Kit2	Paper feeding kit	100,000 pages [1]		

A

Touchscreen messages	Supply to replace	Approximate life	How to replace	Order No.
Replace Laser	Laser unit	100,000 pages [1]	Contact Brother Customer Service or a Brother Authorized Service Center to replace the laser unit. To replace the laser unit contact Brother Customer Service at: 1-877-BROTHER (1-877-276-8437) **(in USA)** http://www.brother.ca/support **(in Canada)** or to locate a Brother Authorized Service Center, visit http://www.brother-usa.com/service/	

[1] Letter or A4 size single-sided pages.

[2] Approximate cartridge yield is declared in accordance with ISO/IEC 19798.

[3] 1 page per job

[4] Drum life is approximate and may vary by type of use.

[5] Standard toner cartridge

[6] High yield toner cartridge

[7] Super high yield toner cartridge

[8] 5 pages per job

NOTE

- Visit http://www.brother.com/original/index.html for instructions about how to return your used supply items to the Brother collection program. If you choose not to return your used supplies, discard the used supplies according to local regulations, keeping it separate from domestic waste. If you have questions, contact your local waste disposal office.
- We recommend placing used supply items on a piece of paper to prevent accidentally spilling or scattering the material inside.
- If you use paper that is not a direct equivalent for the recommended paper, the life of supply items and machine parts may be reduced.
- The projected life for each of the toner cartridges is based on ISO/ICE 19798. Frequency of replacement will vary depending on the print volume, percentage of coverage, types of media used, and powering on/off the machine.
- Frequency of replacement supplies except toner cartridges will vary depending on the print volume, types of media used, and powering on/off the machine.

Replacing the toner cartridges

Order No. TN-331BK [1], TN-331C [1], TN-331M [1], TN-331Y [1], TN-336BK [2], TN-336C [2], TN-336M [2], TN-336Y [2], TN-339BK [3], TN-339C [3], TN-339M [3], TN-339Y [3]

The Standard toner cartridge can print approximately 2,500 pages [4] (Black) or approximately 1,500 pages [4] (Cyan, Magenta, Yellow). The High Yield toner cartridge can print approximately 4,000 pages [4] (Black) or approximately 3,500 pages [4] (Cyan, Magenta, Yellow). The Super High Yield toner cartridge can print approximately 6,000 pages [4] (Black, Cyan, Magenta, Yellow). Actual page count will vary depending on your average type of document.

When a toner cartridge is running low, the Touchscreen displays `Toner Low`.

The toner cartridges that come supplied with the machine must be replaced after approximately 2,500 pages [4] (Black) or approximately 1,500 pages [4] (Cyan, Magenta, Yellow) for MFC-L8600CDW and MFC-L8850CDW and approximately 6,000 pages [4] (Black, Cyan, Magenta, Yellow) for MFC-L9550CDW.

1 Standard toner cartridge

2 High yield toner cartridge

3 Super high yield toner cartridge

4 Approximate cartridge yield is declared in accordance with ISO/IEC 19798.

NOTE

- The indication of remaining toner life will vary depending on the types of documents printed and customer's usage.
- It is a good idea to keep a new toner cartridge ready for use when you see the `Toner Low` warning.
- To ensure high quality printing, we recommend that you use only Genuine Brother Brand toner cartridges. When you want to buy toner cartridges, contact Brother Customer Service.
- We recommend that you clean the machine when you replace the toner cartridge (see Advanced User's Guide).
- DO NOT unpack the new toner cartridge until you are ready to install it.

Toner Low: X

If the Touchscreen displays `Toner Low: X`, buy a new toner cartridge for the color indicated on the Touchscreen and have it ready before you get a `Replace Toner` message.

Replace Toner

When the Touchscreen displays `Replace Toner` the machine will stop printing until you replace the toner cartridge.

The Touchscreen indicates the toner cartridge color that you must replace. (`BK`=Black, `C`=Cyan, `M`=Magenta, `Y`=Yellow).

A new genuine Brother toner cartridge will reset the Replace Toner mode.

NOTE

For more information about how the toner cartridge life is calculated, see *Important information for the toner cartridge life* on page 225.

A

Replacing the toner cartridges

1. Make sure the machine is turned on.
2. Press the front cover release button and pull open the front cover.

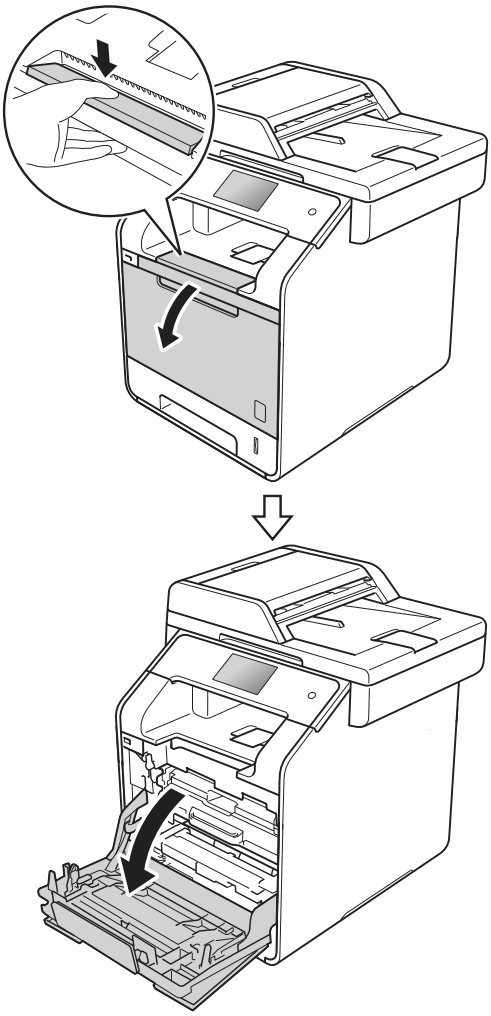

3. Hold the blue handle of the drum unit. Pull the drum unit out until it stops.

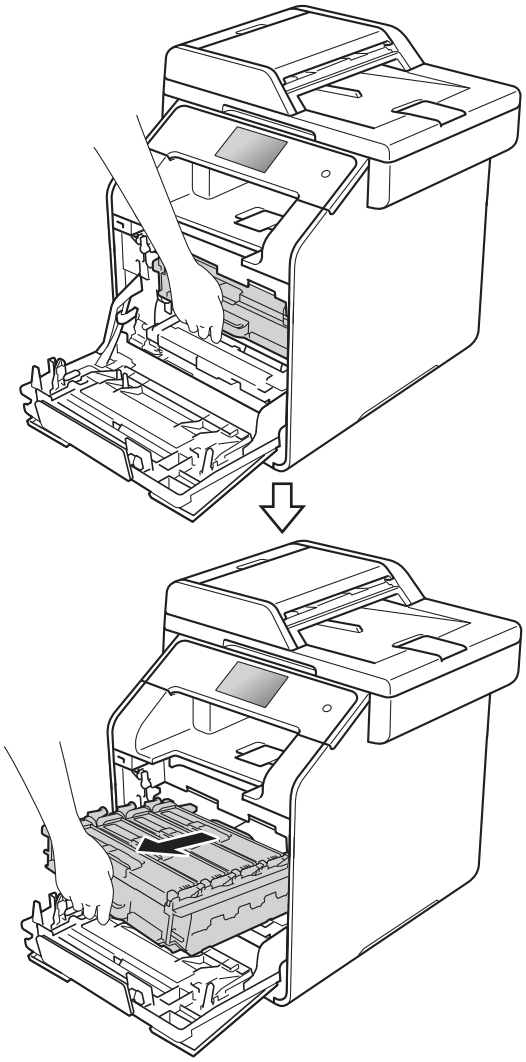

4 Hold the handle of the toner cartridge and gently push it toward the machine to unlock it. Then pull it out of the drum unit. Repeat this for all the toner cartridges.

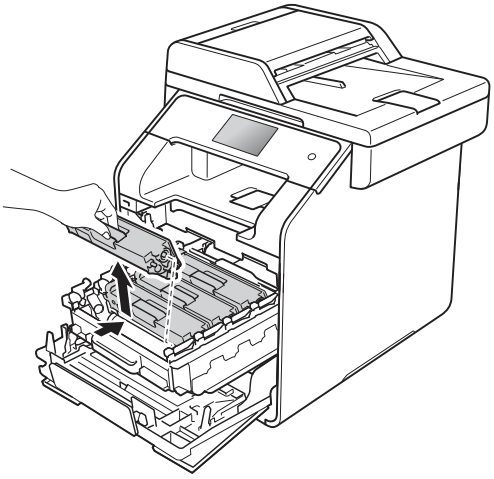

WARNING

- DO NOT put a toner cartridge into a fire. It could explode, resulting in injuries.
- DO NOT use flammable substances, any type of spray, or an organic solvent/liquid containing alcohol or ammonia to clean the inside or outside of the machine. Doing so could cause a fire or electrical shock. Instead, use only a dry, lint-free cloth.

  (See Product Safety Guide)

IMPORTANT

- Handle the toner cartridge carefully. If toner scatters on your hands or clothes, immediately wipe or wash it off with cold water.
- To avoid print quality problems, DO NOT touch the shaded parts shown in the illustrations.

<Toner cartridge>

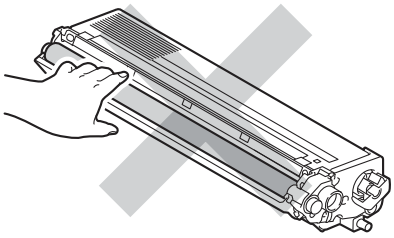

- We recommend that you place the toner cartridge on a clean, flat, level, stable surface with a sheet of disposable paper or cloth underneath it in case you accidentally spill or scatter toner.

NOTE

- Be sure to seal up the used toner cartridge tightly in a bag so that toner powder does not spill out of the cartridge.
- Visit http://www.brother.com/original/index.html for instructions about how to return your used supply items to the Brother collection program. If you choose not to return your used supplies, discard the used supplies according to local regulations, keeping it separate from domestic waste. If you have questions, call your local waste disposal office.

5 Clean the corona wire inside the drum unit by gently sliding the blue tab from left to right and right to left several times.

IMPORTANT

Be sure to return the tab to the home position (1). If you do not, printed pages may have a vertical stripe.

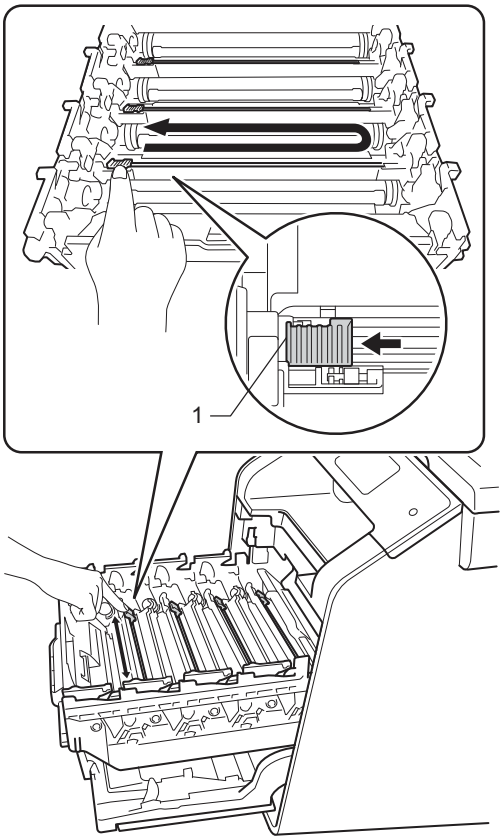

6 Repeat step ❺ to clean each of the three remaining corona wires.

7 Unpack the new toner cartridge, then pull off the protective cover.

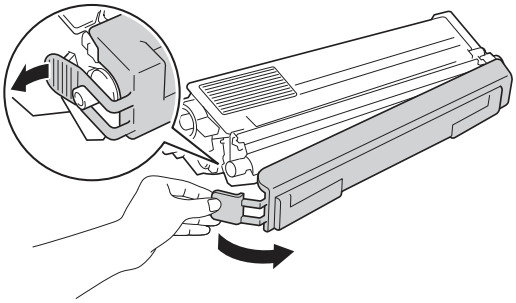

IMPORTANT

- DO NOT unpack the new toner cartridge until you are ready to install it. If a toner cartridge is left unpacked for a long time, the toner life will be shortened.
- If an unpacked drum unit is placed in direct sunlight (or room light for long periods of time), the unit may be damaged.
- Brother strongly recommends that you DO NOT refill the toner cartridge provided with your machine. We also strongly recommend that you continue to use only Genuine Brother Brand replacement toner cartridges. Use or attempted use of potentially incompatible toner and/or cartridges in the Brother machine may cause damage to the machine and/or may result in unsatisfactory print quality. Our limited warranty coverage does not apply to any problem that is caused by the use of third party toner and/or cartridges. To protect your investment and obtain premium performance from the Brother machine, we strongly recommend the use of Genuine Brother Supplies.
- Put the new toner cartridge in the drum unit immediately after you remove its protective cover. To prevent any degradation to the print quality, DO NOT touch the shaded parts shown in the illustrations.

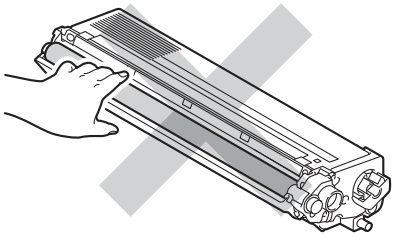

8 Hold the handle of the toner cartridge and slide the toner cartridge into the drum unit then gently pull it toward you until you hear it click into place. Make sure that you match the toner cartridge color to the same color label on the drum unit. Repeat this for all the toner cartridges.

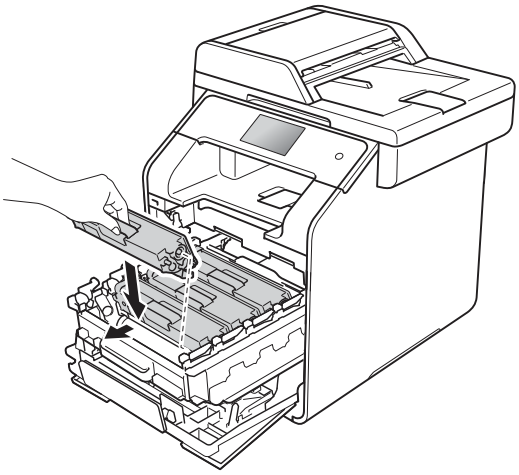

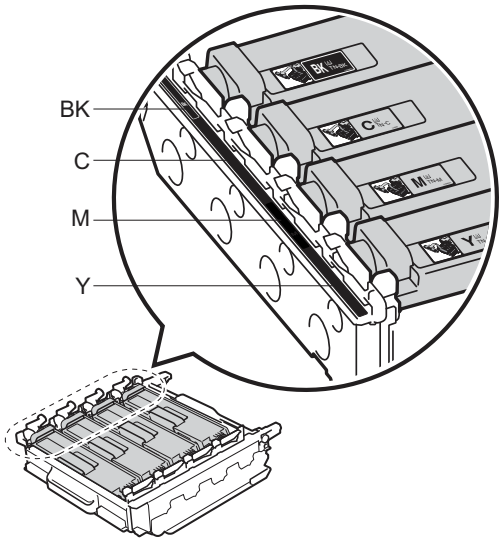

BK = Black, C = Cyan,
M = Magenta, Y= Yellow

NOTE

Make sure you installed the toner cartridge correctly or it may separate from the drum unit.

9 Push the drum unit in until it stops.

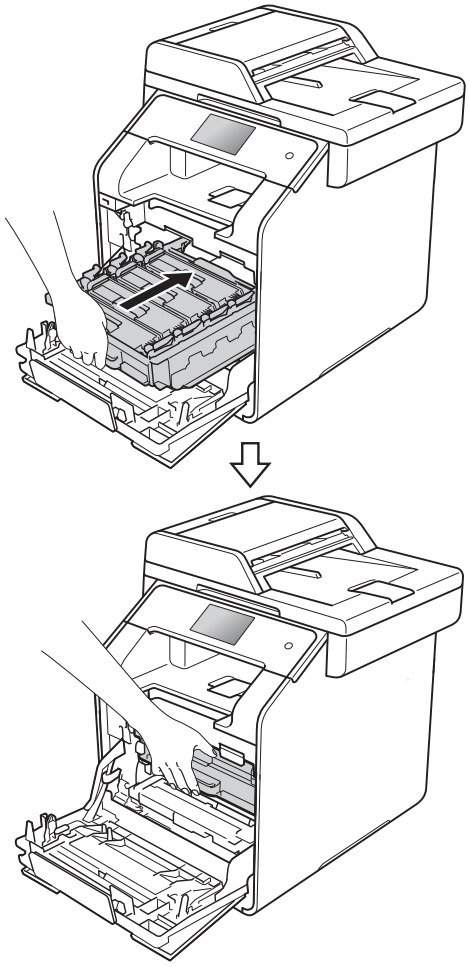

10 Close the front cover of the machine.

NOTE

After replacing a toner cartridge, DO NOT turn off the machine or open the front cover until the Touchscreen clears the `Please wait.` message and returns to Ready mode.

Cleaning the corona wires

If you have print quality problems or the Touchscreen displays `Drum !`, clean the corona wires as follows:

1. Make sure that the machine is turned on.

2. Press the front cover release button and pull open the front cover.

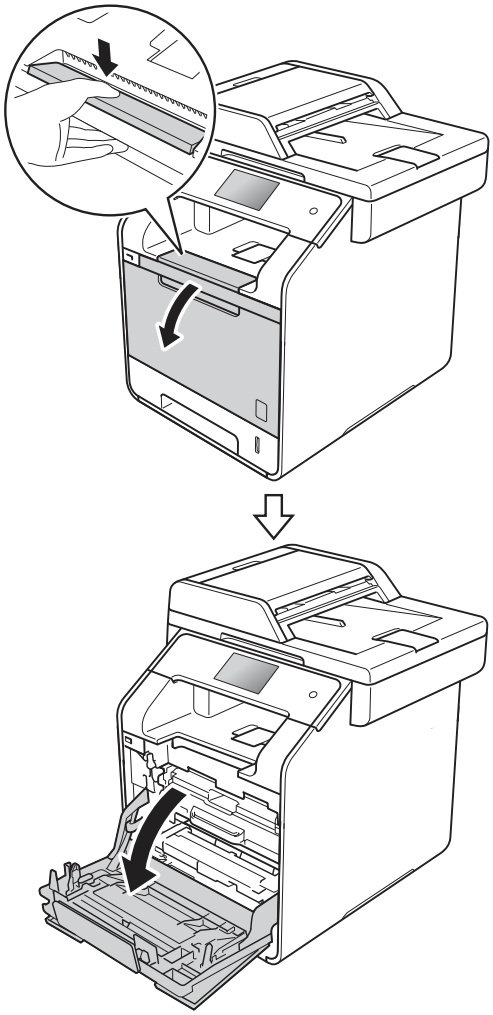

3. Hold the blue handle of the drum unit. Pull the drum unit out until it stops.

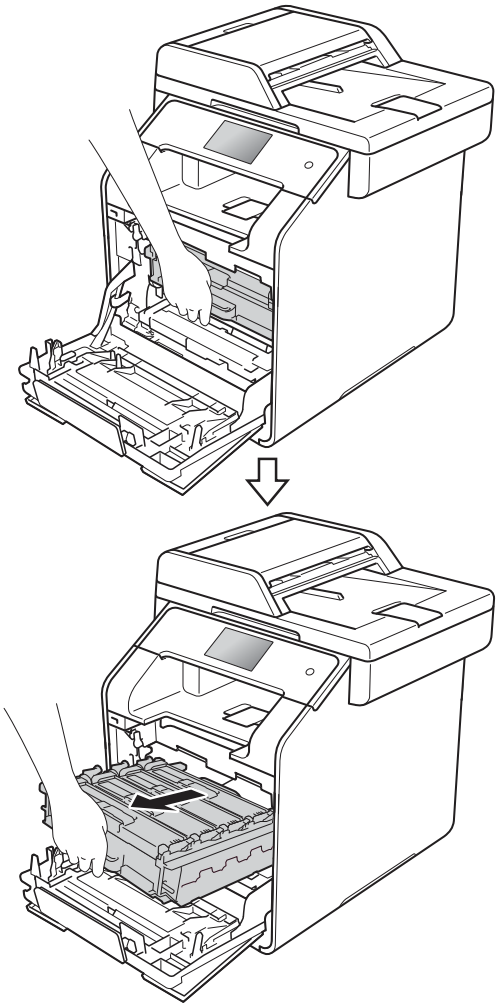

A

4 Hold the handle of the toner cartridge and gently push it toward the machine to unlock it. Then pull it out of the drum unit. Repeat this for all the toner cartridges.

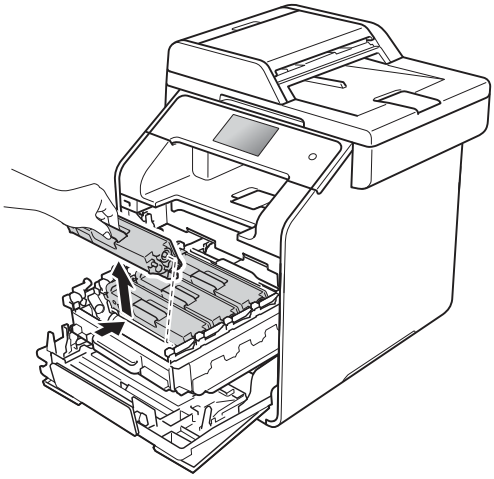

IMPORTANT

- We recommend that you place the toner cartridge on a piece of disposable paper or cloth in case you accidentally spill or scatter toner.
- Handle the toner cartridge carefully. If toner scatters on your hands or clothes, immediately wipe or wash it off with cold water.

5 Clean the corona wire inside the drum by gently sliding the blue tab from left to right and right to left several times.

IMPORTANT

Be sure to return the tab to the home position (1). If you do not, printed pages may have a vertical stripe.

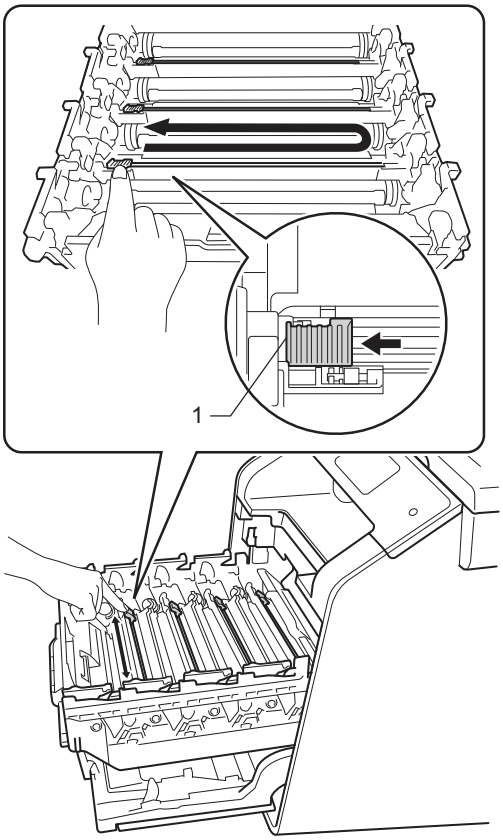

6 Repeat step ❺ to clean each of three remaining corona wires.

7 Hold the handle of the toner cartridge and slide the toner cartridge into the drum unit then gently pull it toward you until you hear it click into place. Make sure that you match the toner cartridge color to the same color label on the drum unit. Repeat this for all the toner cartridges.

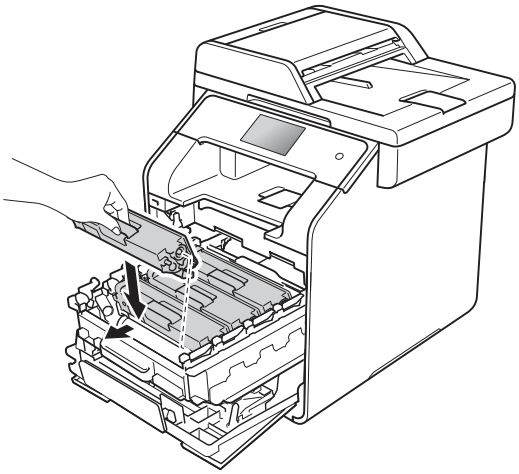

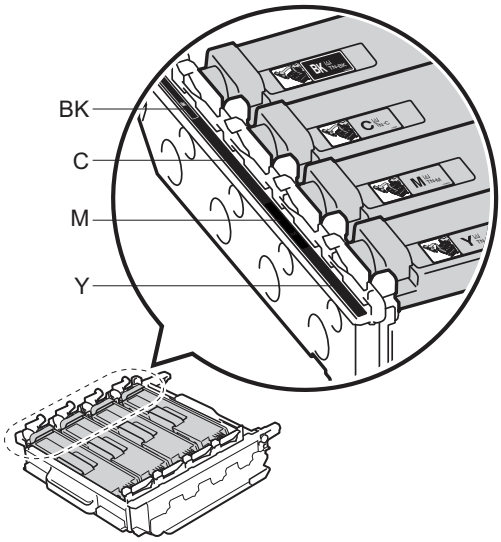

BK = Black, C = Cyan,
M = Magenta, Y= Yellow

8 Push the drum unit in until it stops.

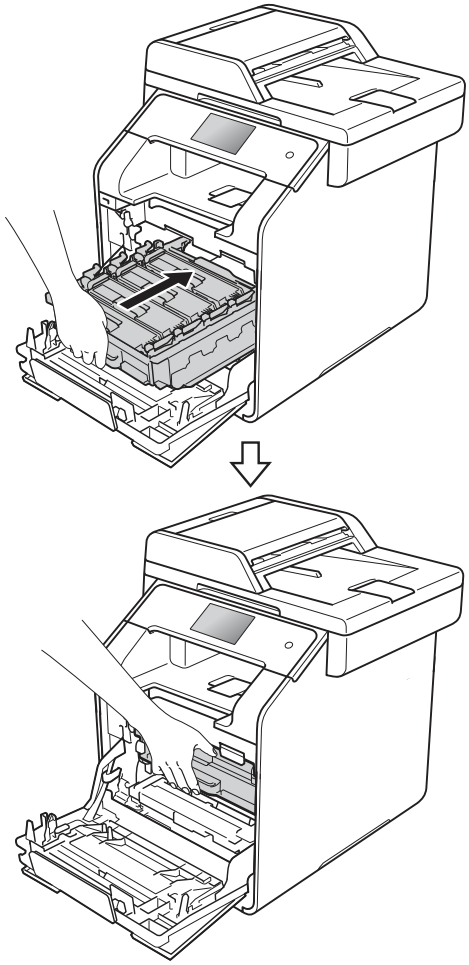

9 Close the front cover of the machine.

A

Replacing the drum unit

Order No. DR-331CL

A new drum unit can print approximately 25,000 Letter or A4 size single-sided pages. [1]

[1] Drum life is approximate and may vary by type of use.

NOTE

- There are many factors that determine the actual drum life, such as the temperature, humidity, type of paper, type of toner used and so on. Under ideal conditions, the average drum life is estimated at approximately 25,000 pages. The actual number of pages that your drum will print may be significantly less than this estimate. Because we have no control over the many factors that determine the actual drum life, we cannot guarantee a minimum number of pages that will be printed by your drum.
- For best performance, use only genuine Brother toner. The machine should be used only in a clean, dust-free environment with adequate ventilation.
- Printing with a non-Brother drum unit may reduce not only the print quality but also the quality and life of the machine itself. Warranty coverage does not apply to problems caused by the use of a non-Brother drum unit.

Drum !

The corona wires are coated with paper dust or toner. Clean the corona wires in the four drums (see *Cleaning the corona wires* on page 87).

If you cleaned the corona wires and the `Drum !` error was not cleared, then the drum unit is at the end of its life. Replace the drum unit with a new set.

Drum End Soon

The drum unit is nearing the end of its rated life and will require replacement. We recommend you keep a genuine Brother drum unit ready for installation. Buy a new drum unit (DR-331CL) and have it ready before you get a Replace Drum message.

Replace Drum

The drum unit has exceeded its rated life. Replace the drum unit with a new one. We recommend a genuine Brother drum unit be installed at this time.

After replacement, reset the drum counter by following the instructions included with the new drum unit (see *Resetting the drum counter* on page 96).

Drum Stop

We cannot guarantee the print quality. Replace the drum unit with a new one. We recommend a genuine Brother drum unit be installed at this time.

After replacement, reset the drum counter by following the instructions included with the new drum unit (see *Resetting the drum counter* on page 96).

Replacing the drum unit

IMPORTANT

- While removing the drum unit, handle it carefully because it may contain toner. If toner scatters on your hands or clothes, wipe or wash it off with cold water at once.
- Every time you replace the drum unit, clean the inside of the machine (see Advanced User's Guide).
- DO NOT unpack the new drum unit until you are ready to install it. Exposure to direct sunlight (or room light for long periods of time) may damage the drum unit.

1. Make sure the machine is turned on.

2 Press the front cover release button and pull open the front cover.

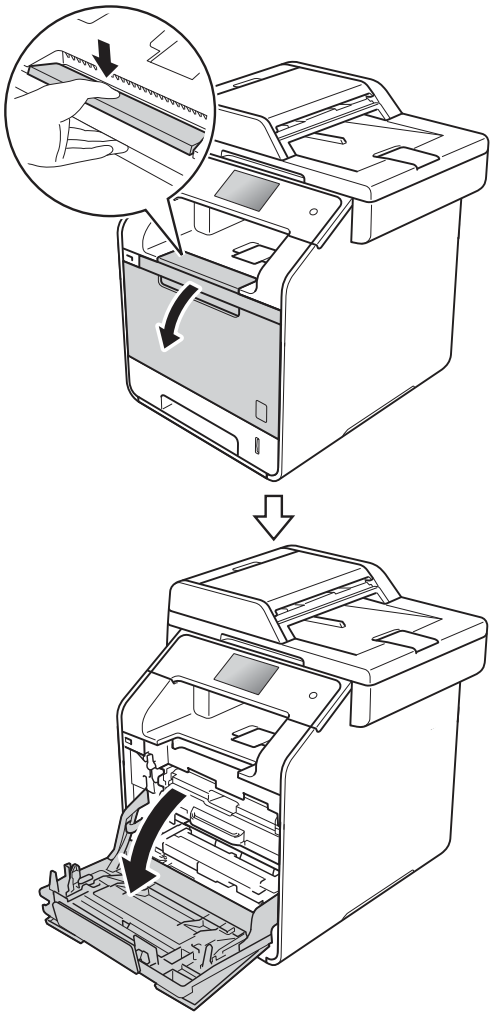

3 Hold the blue handle of the drum unit. Pull the drum unit out until it stops.

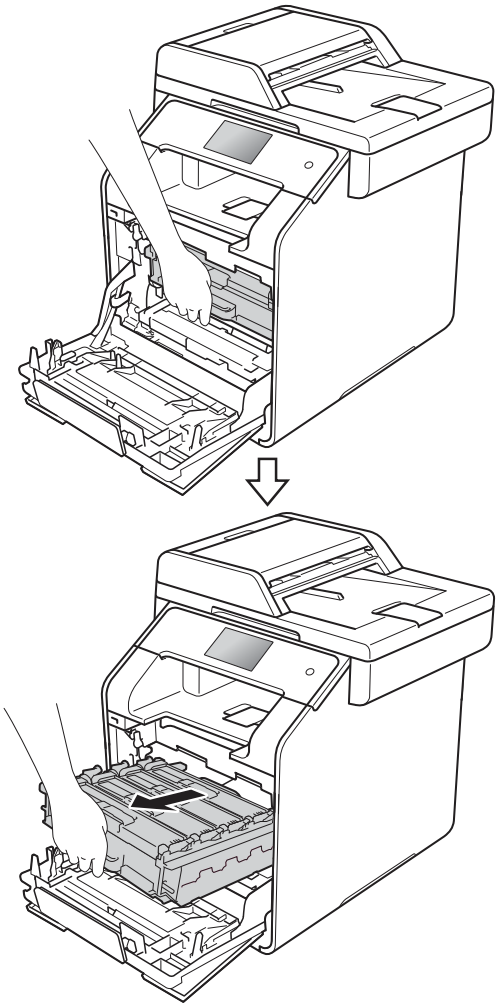

4 Turn the blue lock lever (1) at the left of the machine counterclockwise to the release position. Holding the blue handles of the drum unit, lift the front of the drum unit and remove it from the machine.

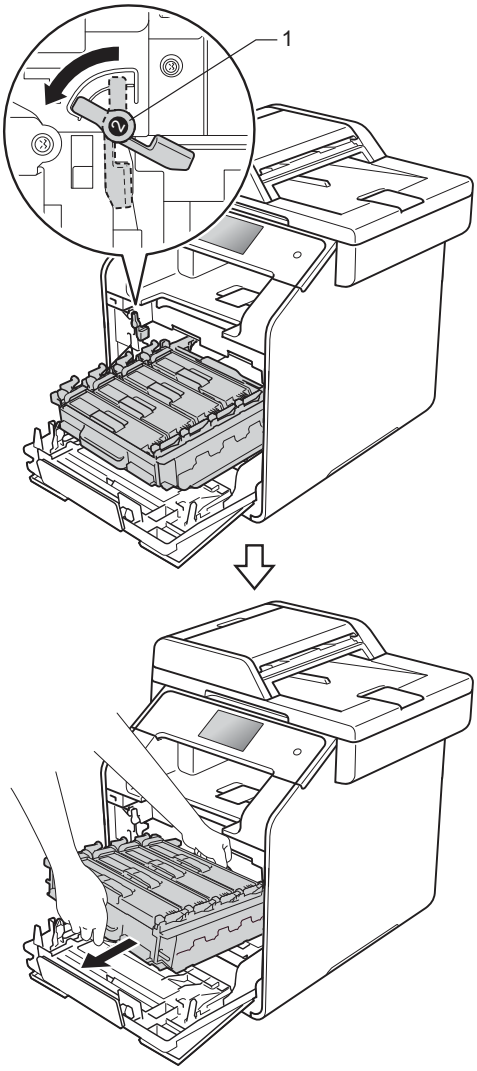

IMPORTANT

- We recommend that you place the drum unit on a clean, flat surface with a piece of disposable paper underneath it in case you accidentally spill or scatter toner.
- To prevent damage to the machine from static electricity, DO NOT touch the electrodes shown in the illustration.

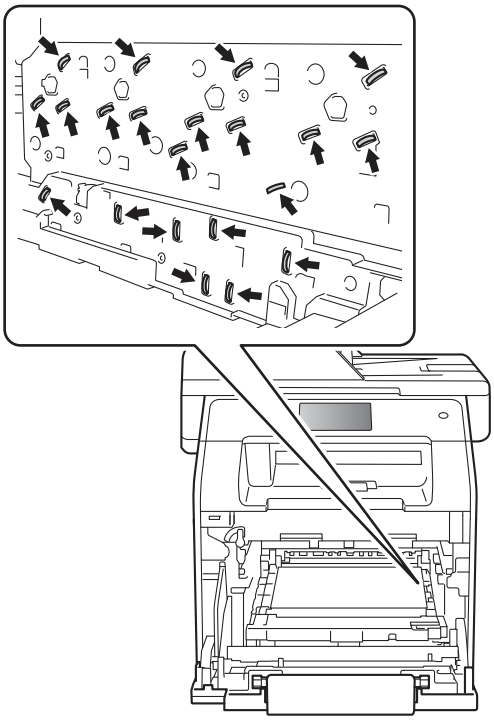

5 Hold the handle of the toner cartridge and gently push it forward to unlock it.Then pull it out of the drum unit. Repeat this for all the toner cartridges.

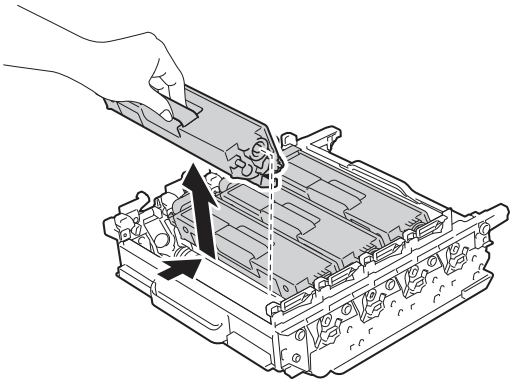

WARNING

- DO NOT put a toner cartridge into a fire. It could explode, resulting in injuries.
- DO NOT use flammable substances, any type of spray, or an organic solvent/liquid containing alcohol or ammonia to clean the inside or outside of the machine. Doing so could cause a fire or electrical shock. Instead, use only a dry, lint-free cloth.

  (See Product Safety Guide)

IMPORTANT

- Handle the toner cartridge carefully. If toner scatters on your hands or clothes, immediately wipe or wash it off with cold water.
- To avoid print quality problems, DO NOT touch the shaded parts shown in the illustrations.

<Toner cartridge>

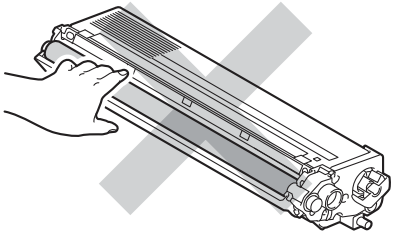

<Drum unit>

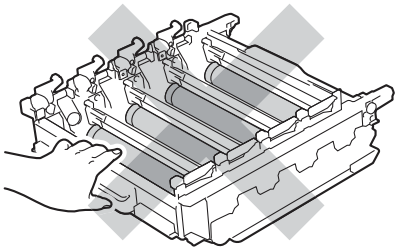

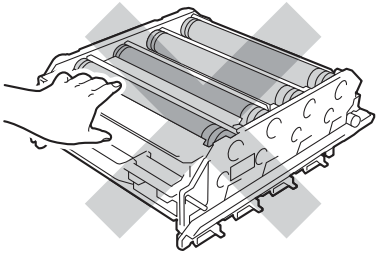

- We recommend that you place the toner cartridge on a clean, flat, level, stable surface with a sheet of disposable paper or cloth underneath it in case you accidentally spill or scatter toner.

A

NOTE

- Be sure to seal up the used drum unit tightly in a bag so that toner powder does not spill out of the drum unit.
- Visit http://www.brother.com/original/index.html for instructions about how to return your used supply items to the Brother collection program. If you choose not to return your used supplies, discard the used supplies according to local regulations, keeping it separate from domestic waste. If you have questions, call your local waste disposal office.

6 Unpack the new drum unit and remove the protective cover.

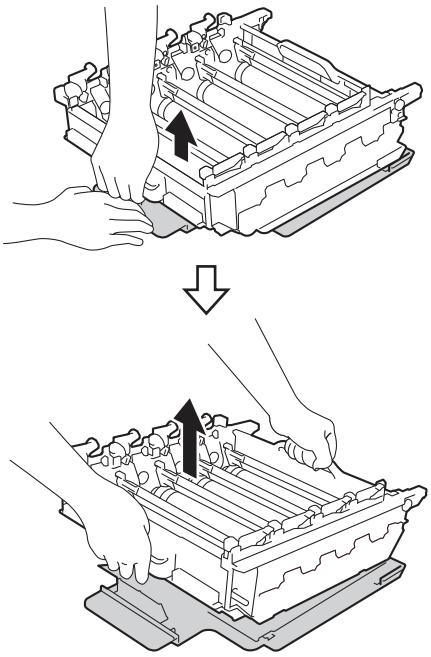

7 Hold the handle of the toner cartridge and slide it into the appropriate colored section of the drum unit until it clicks into place.

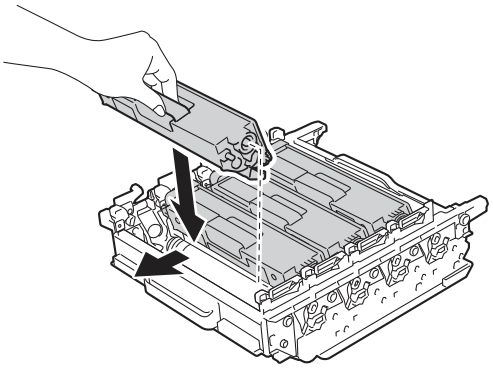

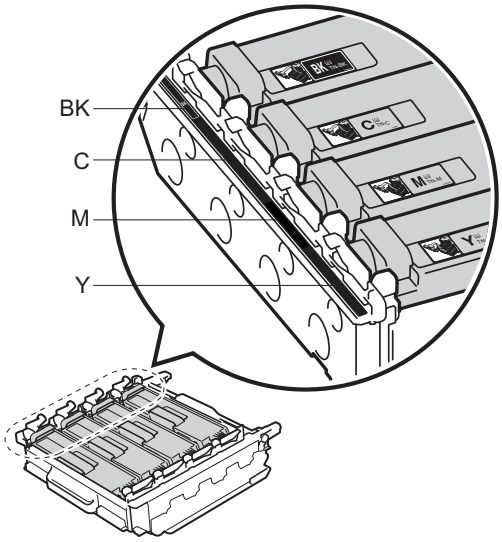

BK = Black, C = Cyan,
M = Magenta, Y= Yellow

NOTE

Make sure you install the toner cartridge correctly or it may separate from the drum unit.

8 Make sure the blue lock lever (1) is in the release position as shown in the illustration.

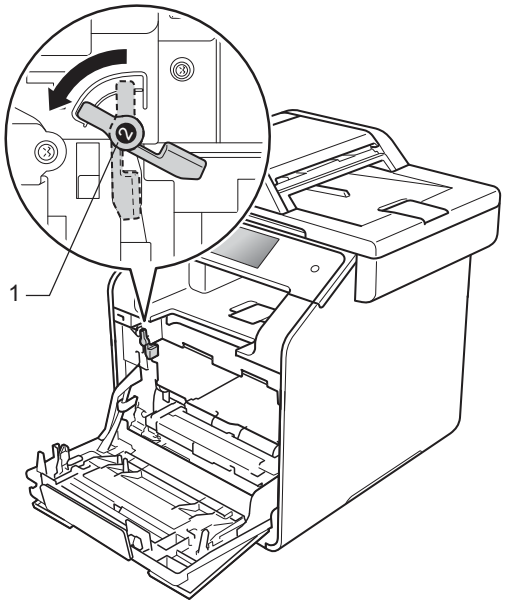

9 Gently slide the drum unit into the machine until it stops at the blue lock lever.

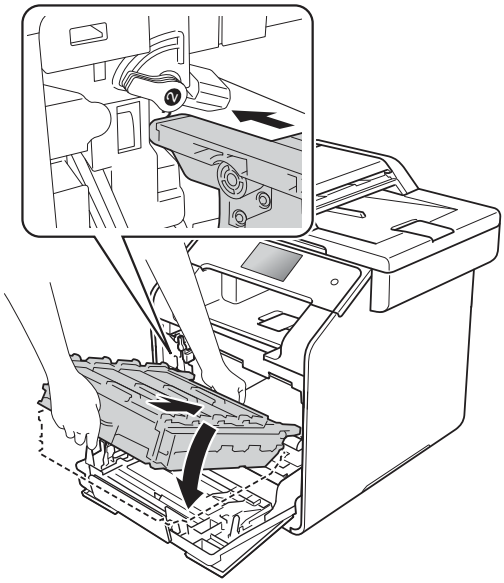

10 Turn the blue lock lever (1) clockwise to the lock position.

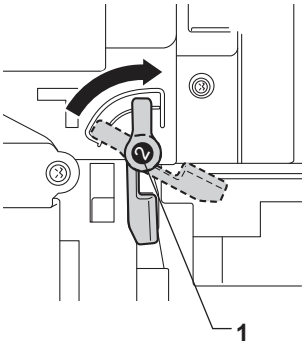

11 Push the drum unit in until it stops.

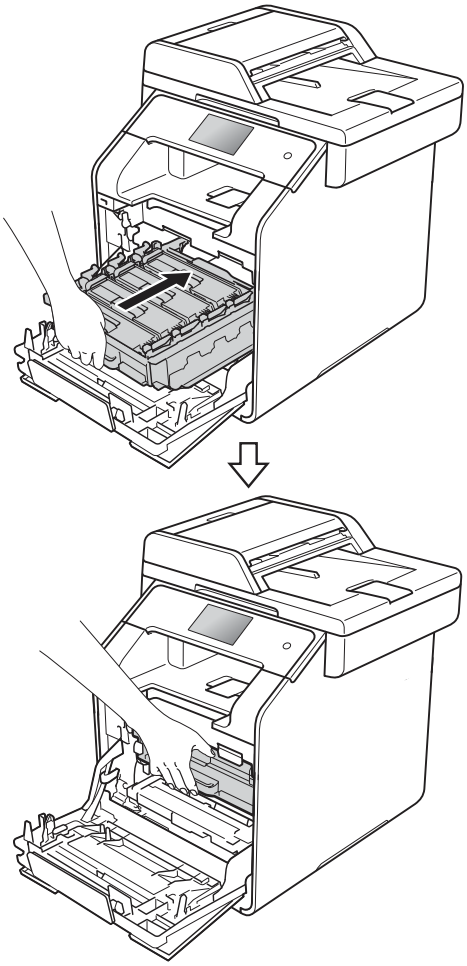

12 Close the front cover of the machine.

Resetting the drum counter

When you replace the drum unit with a *new* one, you must reset the drum counter by completing the following steps.

IMPORTANT

Do not reset the drum counter when you only replace the toner cartridge.

1. Press ✕ to interrupt the error.
2. Press .
3. Press `All Settings`.
4. Swipe up or down, or press ▲ or ▼ to display `Machine Info.`.
5. Press `Machine Info.`.
6. Press `Parts Life`.
7. Press # until the Touchscreen message changes.
8. Press `Drum`.
9. Press `Yes`.
10. Press .

Replacing the belt unit

Order No. BU-320CL

A new belt unit can print approximately 50,000 (5 pages per job) or Letter or A4 size single-sided pages. [1]

[1] Belt unit life is approximate and may vary by type of use.

Belt End Soon

If the Touchscreen displays `Belt End Soon`, it means the belt unit is near the end of its life. Buy a new belt unit and have it ready before you get a `Replace Belt` message. To replace the belt unit, see *Replacing the belt unit* on page 96.

Replace Belt

When the `Replace Belt` message appears on the Touchscreen, you must replace the belt unit.

After replacement, reset the belt unit by following the instructions included with the new belt unit (see *Resetting the belt unit counter* on page 101).

IMPORTANT

- DO NOT touch the surface of the belt unit. If you touch it, it could degrade print quality.
- Damage caused by incorrect handling of the belt unit may void your warranty.

Replacing the belt unit

1. Make sure the machine is turned on.

2 Press the front cover release button and pull open the front cover.

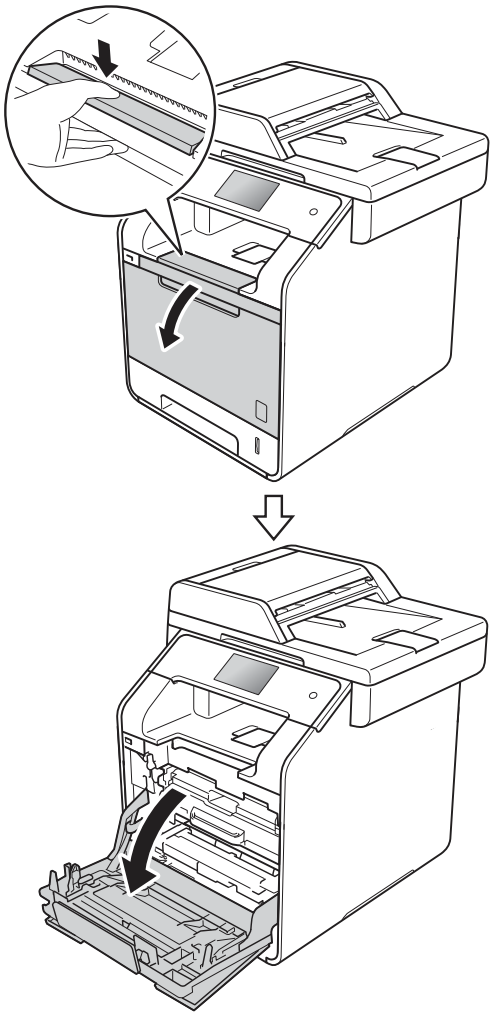

3 Hold the blue handle of the drum unit. Pull the drum unit out until it stops.

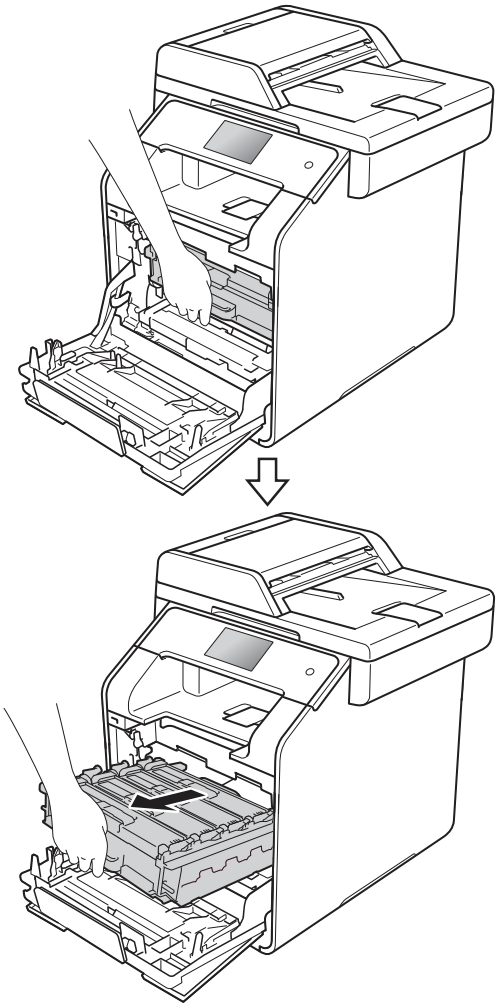

4 Turn the blue lock lever (1) at the left of the machine counterclockwise to the release position. Holding the blue handles of the drum unit, lift the front of the drum unit and remove it from the machine.

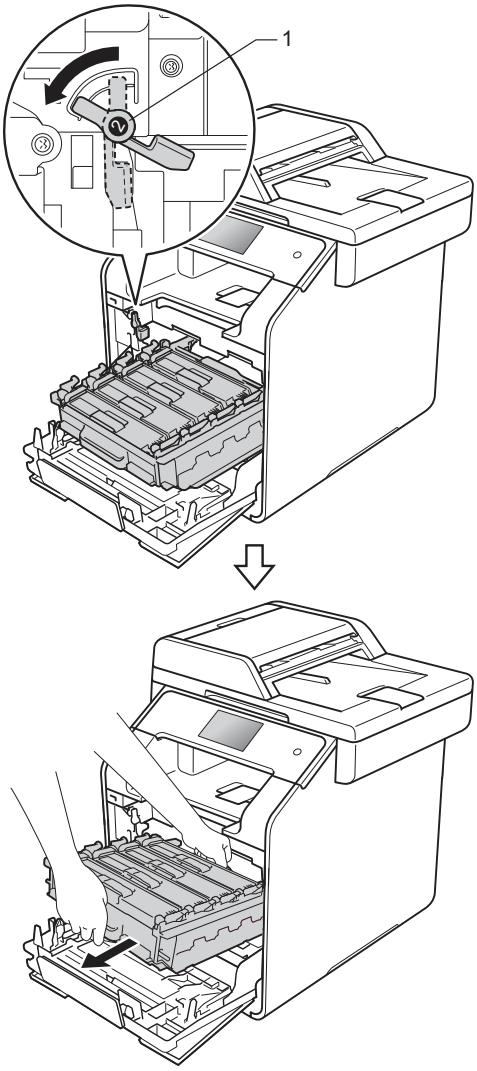

IMPORTANT

- We recommend that you place the drum unit on a clean, flat surface with disposable paper underneath it in case you accidentally spill or scatter toner.
- To prevent damage to the machine from static electricity, DO NOT touch the electrodes shown in the illustration.

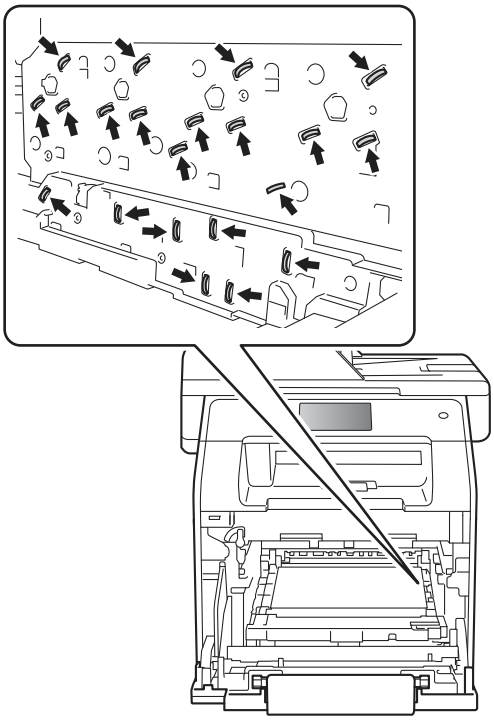

5 Hold the blue handle of the belt unit with both hands and lift the belt unit up, then pull it out.

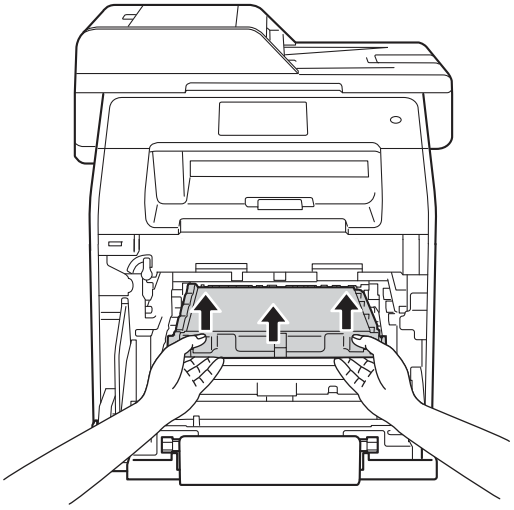

IMPORTANT

To avoid print quality problems, DO NOT touch the shaded parts shown in the illustrations.

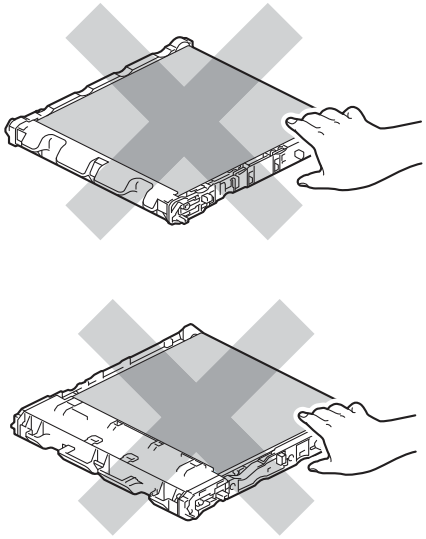

6 Unpack the new belt unit and install the new belt unit in the machine. Make sure the belt unit is level and fits firmly into place.

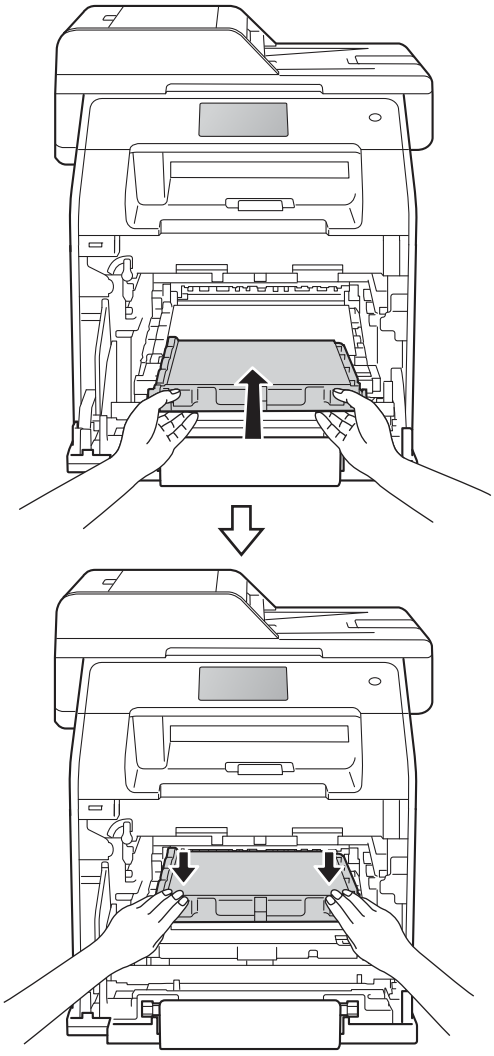

A

7 Make sure the blue lock lever (1) is in the release position as shown in the illustration.

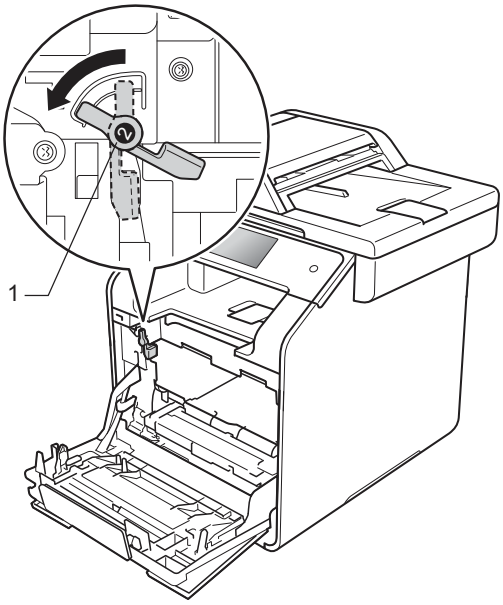

8 Gently slide the drum unit into the machine until it stops at the blue lock lever.

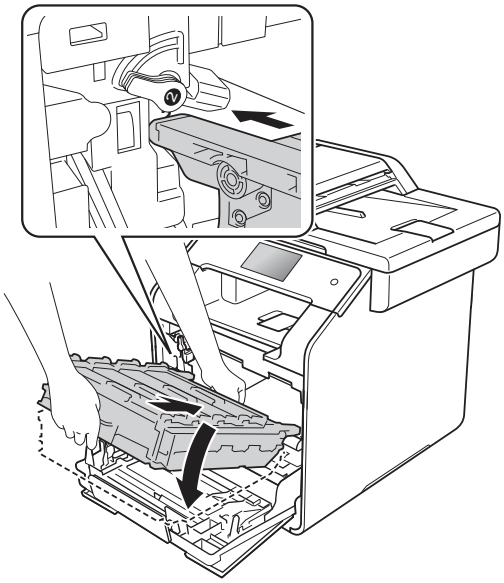

9 Turn the blue lock lever (1) clockwise to the lock position.

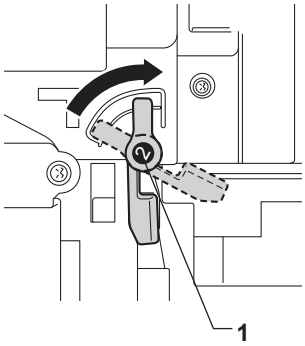

10 Push the drum unit in until it stops.

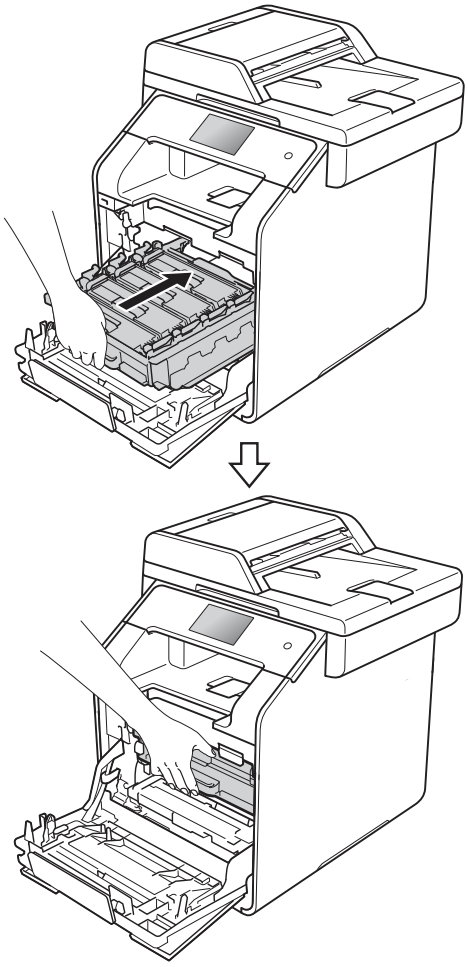

11 Close the front cover of the machine.

Resetting the belt unit counter

When you replace a belt unit with a new one, you must reset the belt unit counter by completing the following steps:

1. Press ✕ to interrupt the error.
2. Press .
3. Press `All Settings`.
4. Swipe up or down, or press ▲ or ▼ to display `Machine Info.`.
5. Press `Machine Info.`.
6. Press `Parts Life`.
7. Press # until the Touchscreen message changes.
8. Press `Belt Unit`.
9. Press `Yes`.
10. Press .

Replacing the waste toner box

Order No. WT-320CL

The life of a waste toner box is approximately 50,000 Letter or A4 size single-sided pages. [1]

[1] Waste toner box life is approximate and may vary by type of use.

WT Box End Soon

If the Touchscreen displays `WT Box End Soon`, it means the waste toner box is near the end of its life. Buy a new waste toner box and have it ready before you get a `Replace WT Box` message.

Replace WT Box

When the `Replace WT Box` message appears on the Touchscreen, you must replace the waste toner box.

Replacing the waste toner box

1. Make sure the machine is turned on.

A

2 Press the front cover release button and pull open the front cover.

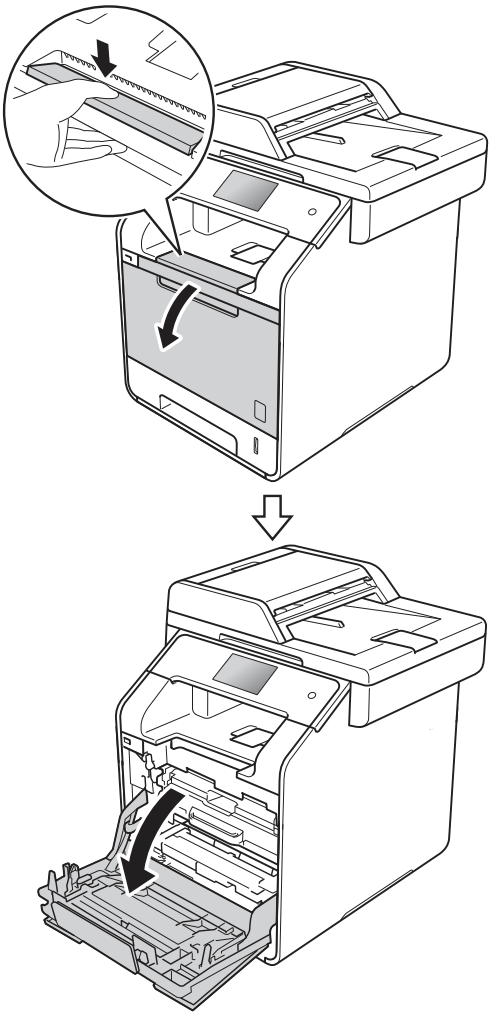

3 Hold the blue handle of the drum unit. Pull the drum unit out until it stops.

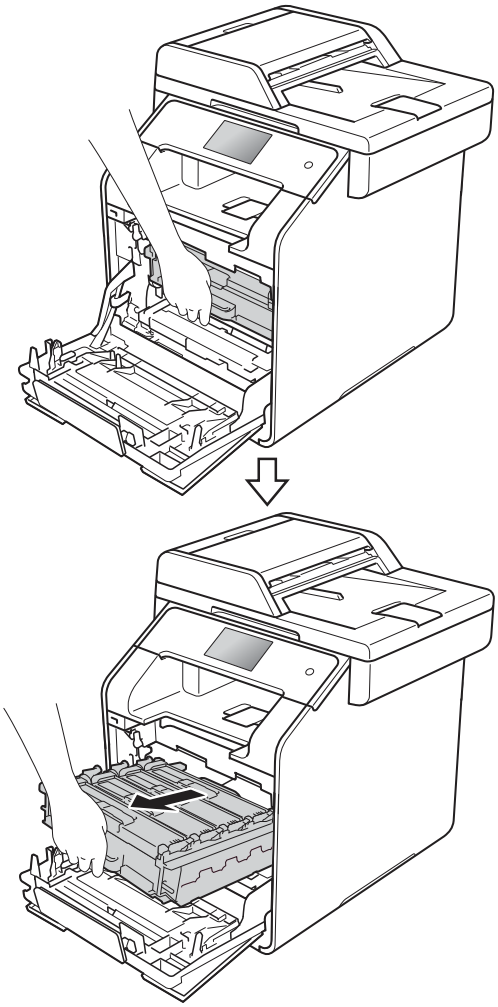

4 Turn the blue lock lever (1) at the left of the machine counterclockwise to the release position. Holding the blue handles of the drum unit, lift the front of the drum unit and remove it from the machine.

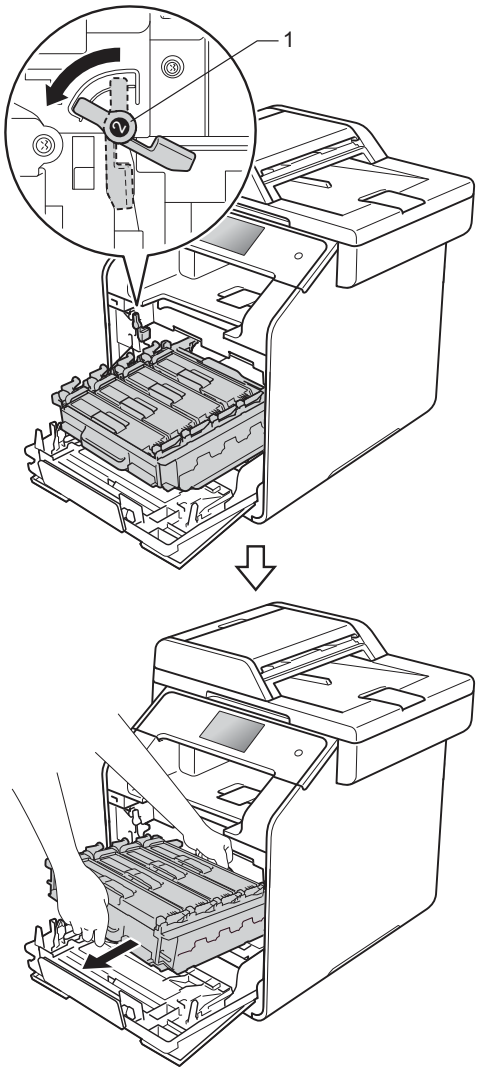

IMPORTANT

- We recommend that you place the drum unit on a clean, flat surface with disposable paper underneath it in case you accidentally spill or scatter toner.
- To prevent damage to the machine from static electricity, DO NOT touch the electrodes shown in the illustration.

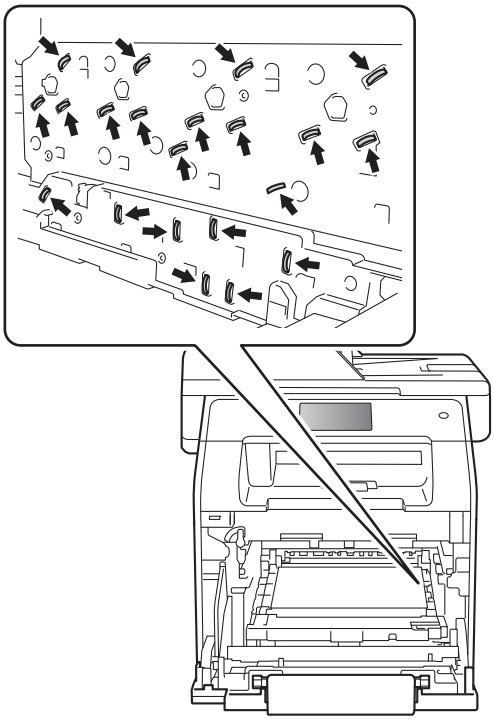

5 Hold the blue handle of the belt unit with both hands and lift the belt unit up, then pull it out.

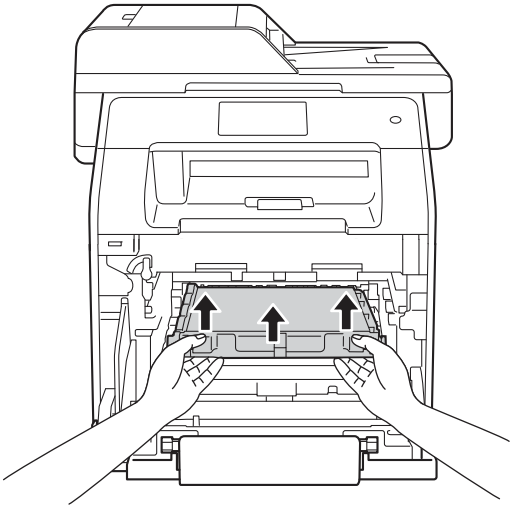

IMPORTANT

To avoid print quality problems, DO NOT touch the shaded parts shown in the illustrations.

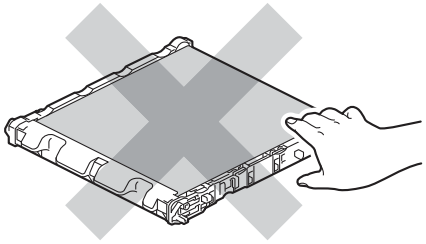

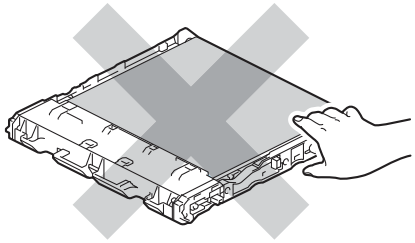

6 Remove the two pieces of orange packing material and discard them.

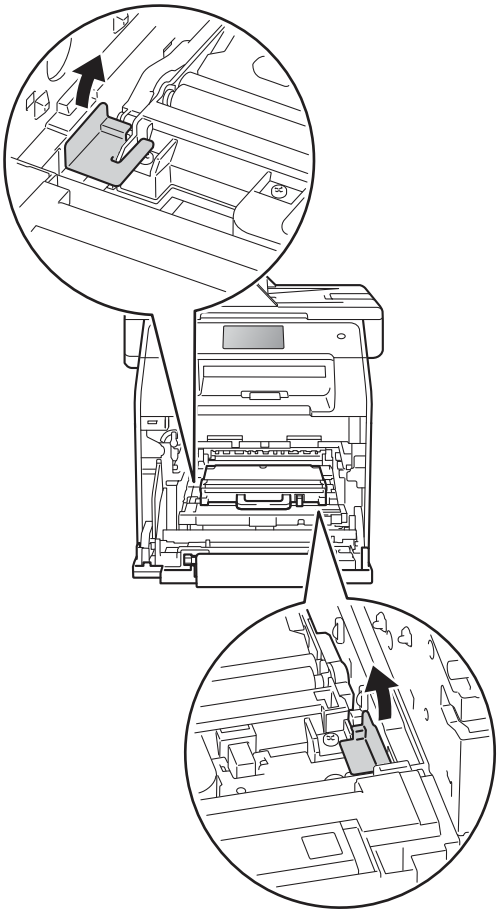

NOTE

This step is only necessary when you are replacing the waste toner box for the first time, and is not required for the replacement waste toner box. The orange packing pieces are installed at the factory to protect your machine during shipment.

7 Hold the blue handle of the waste toner box and remove the waste toner box from the machine.

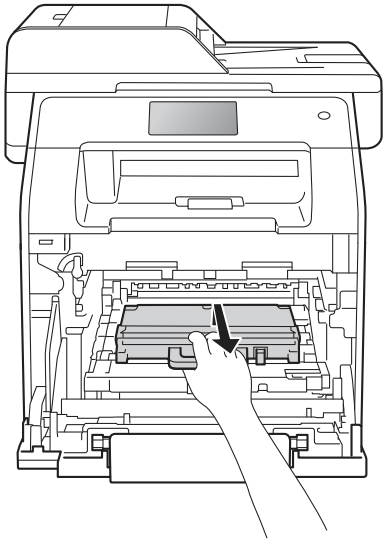

IMPORTANT

DO NOT reuse the waste toner box.

WARNING

- DO NOT put the waste toner box into a fire. It could explode, resulting in injuries.
- DO NOT use flammable substances, any type of spray, or an organic solvent/liquid containing alcohol or ammonia to clean the inside or outside of the machine. Doing so could cause a fire or electrical shock. Instead, use only a dry, lint-free cloth.

  (See Product Safety Guide)

NOTE

- Be sure to seal up the waste toner box tightly in an appropriate bag so that toner powder does not spill out of the waste toner box.
- Discard the used waste toner box according to local regulations, keeping it separate from domestic waste. If you have questions, call your local waste disposal office.

A

8 Unpack the new waste toner box and install the new waste toner box in the machine using the blue handle. Make sure the waste toner box is level and fits firmly into place.

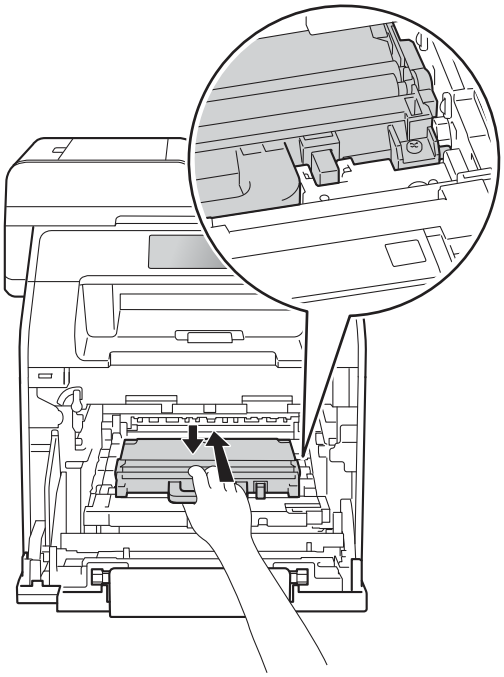

9 Slide the belt unit back into the machine. Make sure the belt unit is level and fits firmly into place.

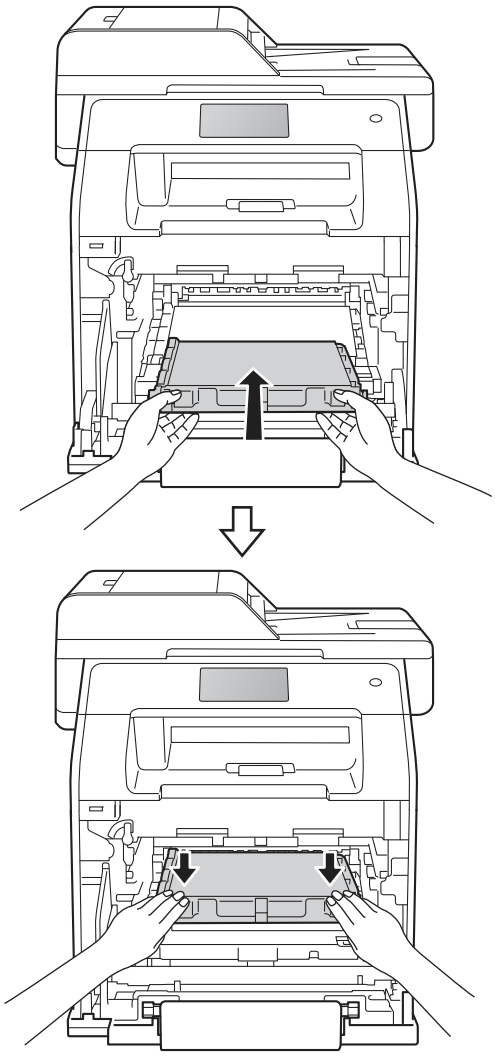

10 Make sure the blue lock lever (1) is in the release position as shown in the illustration.

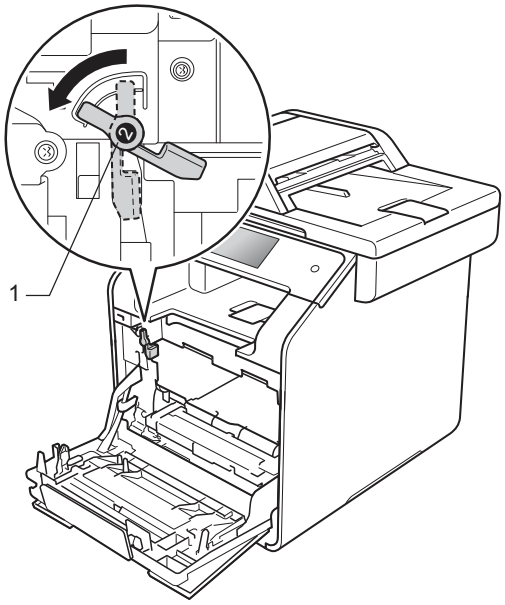

11 Gently slide the drum unit into the machine until it stops at the blue lock lever.

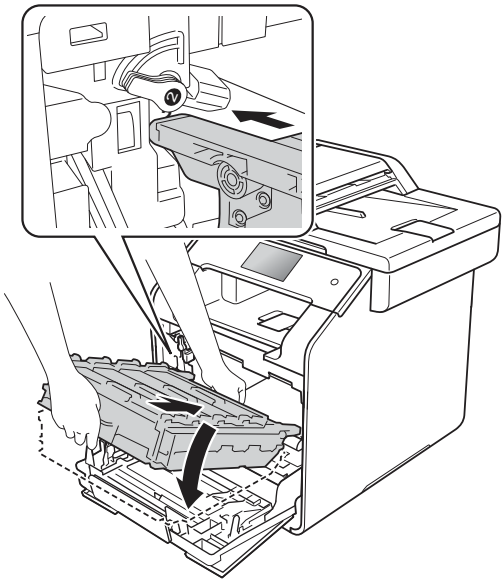

12 Turn the blue lock lever (1) clockwise to the lock position.

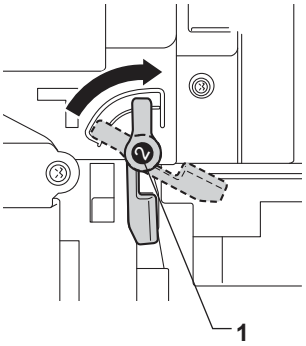

13 Push the drum unit in until it stops.

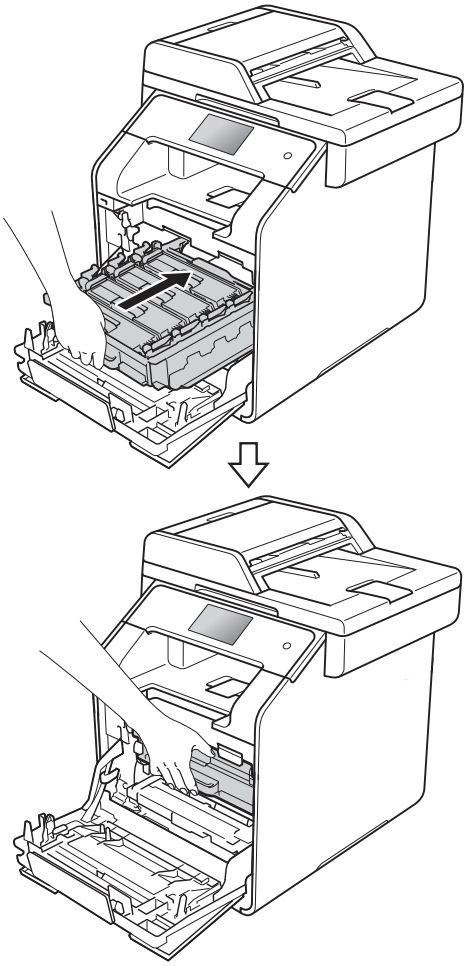

14 Close the front cover of the machine.

Cleaning the scanner

1. Press and hold down ⏻ to turn off the machine.

2. (MFC-L8850CDW and MFC-L9550CDW)
Unfold the ADF document support (1) and then open the ADF cover (2).
Clean the white bar (3) and the scanner glass strip (4) underneath it with a soft lint-free cloth moistened with water.
Close the ADF cover (2) and fold the ADF document support (1).

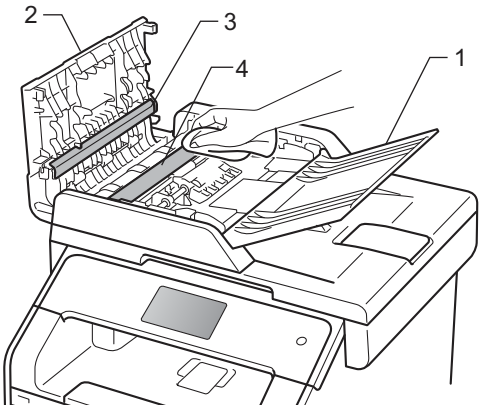

3. Lift the document cover (1).
Clean the white plastic surface (2) and scanner glass (3) underneath it with a soft lint-free cloth moistened with water.

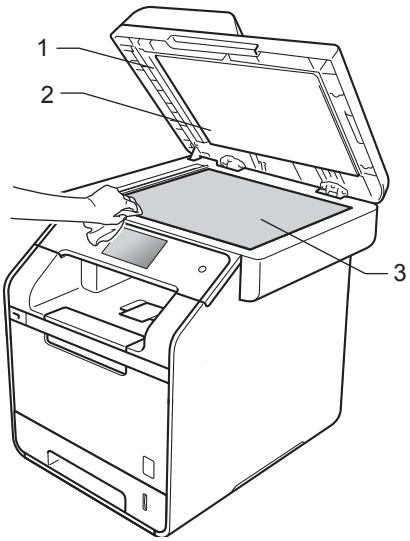

4. In the ADF unit, clean the white bar (1) and the scanner glass strip (2) underneath it with a soft lint-free cloth moistened with water. Read the NOTE and go to step ❺

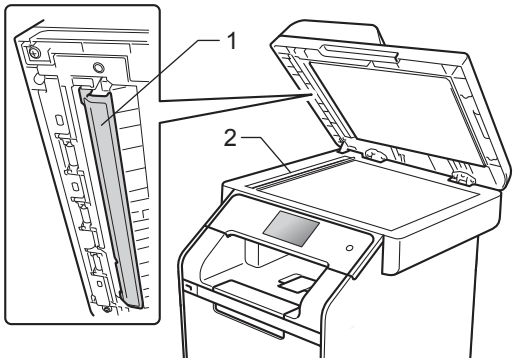

NOTE

In addition to cleaning the scanner glass and glass strip with a soft lint-free cloth moistened with water, run your finger tip over the glass to see if you can feel anything on it. If you feel dirt or debris, clean the glass again concentrating on that area. You may have to repeat the cleaning process three or four times. To test, make a copy after each cleaning.

5. Close the document cover.

6. Press ⏻ to turn on the machine.

B Troubleshooting

If you think there is a problem with your machine, check each of the items below first and follow the troubleshooting tips.

In USA:
Visit the Brother Solutions Center at http://solutions.brother.com/ and click **Manuals** on your model's page to download the other manuals.

You can correct most problems yourself. If you need additional help, the Brother Solutions Center offers the latest FAQs and troubleshooting tips.

Visit http://solutions.brother.com/.

Identifying the problem

First, check that:

- The machine's power cord is connected correctly and the machine's power is on. If the machine does not turn on after connecting the power cord, see *Other difficulties* on page 141.
- All of the protective parts have been removed.
- Paper is inserted correctly in the paper tray.
- The interface cables are securely connected to the machine and the computer, or the wireless connection is set up on both the machine and your computer.
- Touchscreen Messages

  (See *Error and maintenance messages* on page 111.)

If you did not solve the problem with the above checks, identify the problem and go to the page suggested below.

Paper handling and Printing problems:

- *Printing difficulties* on page 133
- *Paper handling difficulties* on page 134
- *Printing received faxes* on page 135

Telephone and Fax problems:

- *Telephone line or connections* on page 135
- *Handling incoming calls* on page 138
- *Receiving Faxes* on page 135
- *Sending faxes* on page 137

Copying problems:

■ *Copying difficulties* on page 138

Scanning problems:

■ *Scanning difficulties* on page 139

Software and Network problems:

■ *Software difficulties* on page 139
■ *Network difficulties* on page 140

Error and maintenance messages

As with any sophisticated office product, errors may occur and supplies may be replaced. If this happens, your machine identifies the error or required routine maintenance and displays the appropriate message. The most common error and maintenance messages are shown in the table.

You can correct most errors and perform routine maintenance yourself. If you need more help, the Brother Solutions Center offers the latest FAQs and troubleshooting tips:

Visit http://solutions.brother.com/.

Using non-Brother supplies may affect the print quality, hardware performance, and machine reliability.

NOTE

The Touchscreen names are as follows.

- Multi-purpose tray: `MP Tray`
- Standard paper tray: `Tray1`
- Optional lower tray: `Tray2`

Error Message	Cause	Action
`2-sided Disabled`	The back cover of the machine is not closed completely.	Close the back cover of the machine until it locks into the closed position.
`2-sided Disabled` `Reload paper, then press [Retry].`	Although the size of paper in the paper tray matches the paper size that was selected from the control panel or printer driver, the machine has stopped printing when it encountered an additional, different size of paper in the tray.	Make sure the paper tray contains only the size of paper you select in either the control panel or printer driver, then press `Color Start` or `Black Start`.
	The paper tray was pulled out before the machine completed printing on both sides of the paper.	Reinstall the paper tray and press `Color Start` or `Black Start`.
`Access Denied`	The function you want to use is restricted by Secure Function Lock.	Call your administrator to check your Secure Function Lock Settings.
`Access Error`	The device was removed from the USB direct interface while the data was processing.	Press ✕. Reinsert the device and try to print with Direct Print.
`Belt End Soon`	The belt unit is near the end of its life.	Buy a new belt unit before you get a `Replace Belt` message.

B

Error Message	Cause	Action
Calibration failed.	Calibration failed.	Press OK and try it again. ■ Press and hold down ⏻ to turn off the machine. Wait a few seconds, and then turn on the machine again. Perform the color calibration again using the Touchscreen or the printer driver (see Advanced User's Guide). ■ Put in a new belt unit (see *Replacing the belt unit* on page 96). ■ If the problem continues, contact Brother Customer Service.
Cartridge Error	The toner cartridge is not installed correctly.	Pull out the drum unit, take out the toner cartridge for the color that is indicated on the Touchscreen, and put it back into the drum unit again. Put the drum unit back in the machine. If the problem continues, contact Brother Customer Service.
Comm.Error	Poor telephone line quality caused a communication error.	Send the fax again or connect the machine to another telephone line. If the problem continues, call the telephone company and ask them to check your telephone line.
Condensation	One of the issues that can cause this error is that condensation may form inside the machine after a room temperature change.	Leave the machine turned on. Wait for 30 minutes with the front cover fully opened. Then turn off the machine and close the cover. Turn it on again.
Cooling Down Wait for a while.	The temperature of the drum unit or toner cartridge is too hot. The machine will pause its current print job and go into cooling down mode. During the cooling down mode, you will hear the cooling fan running while the Touchscreen displays Cooling Down, and Wait for a while..	Make sure you can hear the fan in the machine spinning and that the exhaust outlet is not blocked by something. If the fan is spinning, remove any obstacles that surround the exhaust outlet, and then leave the machine turned on but do not use it for several minutes. If the fan is not spinning, disconnect the machine from the power for several minutes, then reconnect it.

Error Message	Cause	Action
Cover is Open.	The front cover is not completely closed.	Close the front cover of the machine.
	The fuser cover is not completely closed or paper was jammed in the back of the machine when you turned on the power.	■ Close the fuser cover located inside the back cover of the machine. ■ Make sure paper is not jammed inside the back of the machine, and then close the fuser cover and press Start (see *Paper is jammed at the back of the machine* on page 126).
	The ADF cover is not completely closed.	Close the ADF cover of the machine.
	The ADF cover is open while loading a document.	Close the ADF cover of the machine, then press ✕.
DIMM Error	■ The DIMM is not installed correctly. ■ The DIMM is broken. ■ The DIMM does not meet the required specifications.	■ Turn off the machine and unplug the power cord. Remove the DIMM. (See Advanced User's Guide) ■ Confirm the DIMM meets the required specifications. (See Advanced User's Guide) ■ Reinstall the DIMM correctly. Wait a few seconds, plug in the power cord, and then turn the machine on again. ■ If this error message appears again, replace the DIMM with a new one. (See Advanced User's Guide)
Disconnected	The other person or other person's fax machine stopped the call.	Try to send or receive again.
Document Jam	The document was not inserted or fed correctly, or the document scanned from the ADF was too long.	See *Document is jammed in the top of the ADF unit* on page 122 or *Using the automatic document feeder (ADF)* on page 39.
DR Mode in Use	The machine is set to Distinctive Ring mode. You cannot change the Receive Mode from Manual to another mode.	Set Distinctive Ring to Off (see *Turning off Distinctive Ring* on page 57).
Drum End Soon	The drum unit is near the end of its life.	Order a new drum unit before you get a Replace Drum message.
Drum !	The corona wires on the drum unit must be cleaned.	Clean all four corona wires inside the drum unit by sliding the blue tab (see *Cleaning the corona wires* on page 87).
	The drum unit is not installed correctly.	Remove the drum unit, remove the toner cartridges from the drum unit, and reinstall the toner cartridges back into the drum unit. Reinstall the drum unit back in the machine.

Error Message	Cause	Action
Drum Stop	It is time to replace the drum unit.	Replace the drum unit, (see *Replacing the drum unit* on page 90).
Jam 2-sided	The paper is jammed underneath the paper tray or the fuser unit.	See *Paper is jammed underneath the paper tray* on page 131.
Jam Inside	The paper is jammed inside the machine.	See *Paper is jammed inside the machine* on page 128.
Jam MP Tray	The paper is jammed in the multi-purpose tray of the machine.	See *Paper is jammed in the multi-purpose tray* on page 124.
Jam Rear	The paper is jammed in the back of the machine.	See *Paper is jammed at the back of the machine* on page 126.
Jam Tray1 Jam Tray2	The paper is jammed in the paper tray of the machine.	See *Paper is jammed in the Paper Tray 1 or Tray 2* on page 125.
Limit Exceeded	The print limit set in Secure Function Lock was reached.	Call your administrator to check your Secure Function Lock Settings.
Log Access Error	The machine could not access the print log file in the server.	Call your administrator to check the Store Print Log to Network settings. For more information, see Software and Network User's Guide.
No Belt Unit	The belt unit is not installed correctly.	Reinstall the belt unit, (see the steps in *Replacing the belt unit* on page 96).
No Drum Unit	The drum unit is not installed correctly.	Reinstall the drum unit, (see the steps in *Replacing the drum unit* on page 90.)
No HUB Support	A USB hub device is connected to the USB direct interface.	Disconnect the USB hub device from the USB direct interface.
No Paper	The machine is out of paper in the paper tray, or paper is not correctly loaded in the paper tray.	Do one of the following: ■ Refill paper in the paper tray. Make sure the paper guides are set to the correct size. ■ Remove the paper and load it again. Make sure the paper guides are set to the correct size. ■ If the problem is not resolved, the paper pick-up roller may need to be cleaned. Clean the paper pick-up roller. (See Advanced User's Guide)
No Permission	Printing color documents is restricted by Secure Function Lock. The print job will be canceled.	Call your administrator to check your Secure Function Lock Settings.
No Response/Busy	The number you dialed does not answer or is busy.	Verify the number and try again.

Error Message	Cause	Action
No Toner	The toner cartridge for the color indicated on the Touchscreen is not installed correctly.	Remove the drum unit, remove the toner cartridge for the color indicated on the Touchscreen from the drum unit, and reinstall the toner cartridge back into the drum unit. Reinstall the drum unit back in the machine. If the problem continues, replace the toner cartridge (see *Replacing the toner cartridges* on page 81).
No Tray	The paper tray indicated on the Touchscreen is not installed or not installed correctly.	Reinstall the paper tray indicated on the Touchscreen.
No Waste Toner	The waste toner box is not installed correctly.	Reinstall the Waste Toner Box, (see the steps in *Replacing the waste toner box* on page 101).
Out of Memory	The machine's memory is full.	**Fax sending or copy operation in progress** Do one of the following: ■ Press Send Now, Partial Print or Quit to send or copy the scanned pages. ■ Press ✕ and wait until the other operations in progress finish, and then try again. ■ Clear the faxes from the memory. Print the faxes that are stored in the memory to restore the memory to 100%. Then turn off Fax Storage to avoid storing more faxes in the memory (see Advanced User's Guide). ■ Add optional memory (see Advanced User's Guide). **Print operation in process** Do one of the following: ■ Reduce the print resolution (see Software and Network User's Guide). ■ Clear the faxes from the memory (see the above explanation). ■ Add optional memory (see Advanced User's Guide).
Print Data Full	The machine's memory is full.	■ Press ✕ and delete the previously stored secure print jobs. ■ Add optional memory (see Advanced User's Guide).

B

Error Message	Cause	Action
Print Unable XX	The machine has a mechanical problem.	Do one of the following: ■ Press and hold down ⏻ to turn the machine off, wait a few minutes, and then turn it on again (see *Transferring your faxes or Fax Journal report* on page 120). ■ If the problem continues, contact Brother Customer Service.
Registration failed.	Registration failed.	Press OK and try again. ■ Press and hold down ⏻ to turn off the machine. Wait a few seconds, then turn it on again. Perform the automatic color registration using the Touchscreen (see Advanced User's Guide). ■ Put in a new belt unit (see *Replacing the belt unit* on page 96). ■ If the problem continues, contact Brother Customer Service.
Rename the File	There is already a file on the USB flash drive with the same name as the file you are trying to save.	Change the file name of the file on the USB flash drive or the file you are trying to save.
Replace Belt	It is time to replace the belt unit.	Replace the belt unit (see *Replacing the belt unit* on page 96).
Replace Drum	It is time to replace the drum unit.	Replace the drum unit (see *Replacing the drum unit* on page 90).
	The drum unit counter was not reset when a new drum was installed.	Reset the drum unit counter, (see *Resetting the drum counter* on page 96).
Replace Fuser	It is time to replace the fuser unit.	Contact Brother Customer Service or a Brother Authorized Service Center to replace the fuser unit. To replace the fuser unit contact Brother Customer Service at: 1-877-BROTHER (1-877-276-8437) **(in USA)** http://www.brother.ca/support **(in Canada)** or to locate a Brother Authorized Service Center, visit: http://www.brother-usa.com/service/

Error Message	Cause	Action
Replace Laser	It is time to replace the laser unit.	Contact Brother Customer Service or a Brother Authorized Service Center to replace the laser unit. To replace the laser unit contact Brother Customer Service at: 1-877-BROTHER (1-877-276-8437) **(in USA)** http://www.brother.ca/support **(in Canada)** or to locate a Brother Authorized Service Center, visit: http://www.brother-usa.com/service/
Replace PF Kit MP Replace PF Kit1 Replace PF Kit2	It is time to replace the paper feeding kit.	Contact Brother Customer Service or a Brother Authorized Service Center to replace the paper feeding kit. To replace the paper feeding kit contact Brother Customer Service at: 1-877-BROTHER (1-877-276-8437) **(in USA)** http://www.brother.ca/support **(in Canada)** or to locate a Brother Authorized Service Center, visit: http://www.brother-usa.com/service/
Replace Toner [1] [1] The Touchscreen indicates the toner cartridge color that you must replace. BK=Black, C=Cyan, M=Magenta, Y=Yellow	The toner cartridge is at the end of its life. The machine will stop all print operations. While memory is available, faxes will be stored in the memory.	Replace the toner cartridge for the color indicated on the Touchscreen (see *Replacing the toner cartridges* on page 81).
Replace WT Box	It is time to replace the waste toner box.	Replace the waste toner box (see *Replacing the waste toner box* on page 101).
Scan Unable	Document is too long for 2-sided scanning.	Press ✕. Use the appropriate size of paper for 2-sided scanning (see *Print media* on page 215).
	The machine has a mechanical problem.	■ Press and hold down ⏻ to turn the machine off, and then turn it on again (see *Transferring your faxes or Fax Journal report* on page 120). ■ If the problem continues, contact Brother Customer Service.
Self-Diagnostic	The temperature of the fuser unit does not rise to a specified temperature within the specified time.	Press and hold down ⏻ to turn the machine off, wait a few seconds, and then turn it on again. Leave the machine idle for 15 minutes with the power on.
	The fuser unit is too hot.	

B

Error Message	Cause	Action
Short paper	The length of the paper in the tray is too short for the machine to deliver it to the face-down output tray.	Open the back cover (face-up output tray) to let the printed page exit onto the face up output tray. Remove the printed pages and then press Retry.
Size Error	The paper size defined in the printer driver is not supported by the defined tray.	Choose a paper size which is supported by each tray (see *Paper type and size* on page 34.)
Size Error 2-sided	The paper size defined in the printer driver and the Touchscreen menu is not available for automatic 2-sided printing.	Press ✕. Choose a paper size that is supported by 2-sided printing. The paper size you can use for automatic 2-sided printing is Letter, Legal or Folio.
	The paper in the tray is not the correct size and is not available for automatic 2-sided printing.	Load the correct size of paper in the tray and set the size of paper for the tray (see *Paper Size* on page 31). The paper size you can use for automatic 2-sided printing is Letter, Legal or Folio.
Size mismatch	The paper in the tray is not the correct size.	Do one of the following: ■ Put the same size of paper in the paper tray that is selected in the printer driver, and then press Start. ■ In the printer driver select the size of paper that you loaded in the indicated paper tray.
Small paper	The paper size specified in the printer driver is too small for the machine to deliver it to the face-down output tray.	Open the back cover (back output tray) to let the printed paper out on the face-up output tray and then press Retry.
Toner Error	One or more toner cartridges are not installed correctly.	Pull out the drum unit. Remove all of the toner cartridges, and then put them back into the drum unit.
Toner Low:X [1] [1] (X) indicates the toner cartridge color that is near the end of its life. BK=Black, C=Cyan, M=Magenta, Y=Yellow	If the Touchscreen displays Toner Low you can still print; however, the machine is telling you that the toner cartridge is near the end of its life.	Order a new toner cartridge for the color that is indicated on the Touchscreen now so a replacement toner cartridge will be available when the Touchscreen displays Replace Toner.
Too Many Files	There are too many files stored on the USB flash drive.	Reduce the number of files stored on the USB flash drive.
Touchscreen Initialization Failed	The Touchscreen was pressed before the power on initialization was completed.	Make sure nothing is touching or resting on the Touchscreen.
	Debris may be stuck between the lower part of the Touchscreen and its frame.	Insert a piece of stiff paper between the lower part of the Touchscreen and its frame and slide it back and forth to push out the debris.
Tray2 Error	The optional lower tray is not installed correctly.	Reinstall the optional lower tray.

Error Message	Cause	Action
`Unusable Device` `Remove the Device. Turn the power off and back on again.`	A defective USB device or a high power consumption USB device has been connected to the USB direct interface.	Unplug the device from the USB direct interface. Press and hold down ⏻ to turn the machine off, and then turn it on again.
`Unusable Device`	A USB device or USB flash drive that is encrypted or not supported is connected to the USB direct interface.	Unplug the device from the USB direct interface (see the specifications for supported USB flash drives in *Printing from a USB flash drive or digital camera supporting mass storage* on page 67).
`USB Write-protected`	The protect switch of the USB flash drive is on.	Turn off the protect switch of the USB flash drive.
`WT Box End Soon`	The waste toner box is near the end of its life.	Buy a new waste toner box before you get a `Replace WT Box` message.

Transferring your faxes or Fax Journal report

If the Touchscreen displays:

- `Print Unable XX`
- `Scan Unable`

We recommend transferring your faxes to another fax machine or to your computer (see *Transferring faxes to another fax machine* on page 120 or *Transferring faxes to your computer* on page 121).

You can also transfer the Fax Journal report to see if there are any faxes you must transfer (see *Transferring the Fax Journal report to another fax machine* on page 121).

NOTE

If there is an error message on the Touchscreen after the faxes have been transferred, disconnect the machine from the power source for several minutes, and then reconnect it.

Transferring faxes to another fax machine

If you have not set up your Station ID, you cannot enter fax transfer mode (see *Set your Station ID* on page 21).

1. Press ✕ to interrupt the error temporarily.
2. Press .
3. Press `All Settings`.
4. Swipe up or down, or press ▲ or ▼ to display `Service`.
5. Press `Service`.
6. Press `Data Transfer`.
7. Press `Fax Transfer`.
8. Do one of the following:
   - If the Touchscreen displays `No Data`, there are no faxes left in the machine's memory. Press `Close`.
   - Enter the fax number to which faxes will be forwarded.
9. Press `Fax Start`.

Transferring faxes to your computer

You can transfer the faxes from your machine's memory to your computer.

1. Press ✕ to interrupt the error temporarily.
2. Make sure you have installed **MFL-Pro Suite** on your computer, and then turn on **PC-FAX Receive** on the computer. Do one of the following:
   - (Windows® XP, Windows Vista® and Windows® 7)

     From the (**Start**) menu, select **All Programs** > **Brother** > **Brother Utilities**.
     Click the drop-down list and select your model name (if not already selected).
     Click **PC-FAX Receive** in the left navigation bar, and then click **Receive**.
   - (Windows® 8)

     Click (**Brother Utilities**), and then click the drop-down list and select your model name (if not already selected). Click **PC-FAX Receive** in the left navigation bar, and then click **Receive**.
3. Make sure you have set `PC Fax Receive` on the machine (see *PC-FAX Receive (Windows® only)* on page 52).
   If faxes are in the machine's memory when you set up `PC Fax Receive`, the Touchscreen will ask if you want to transfer the faxes to your computer.
4. Do one of the following:
   - To transfer all faxes to your computer, press `Yes`. If `Fax Preview` is set to `Off`, you will be asked if you want to print backup copies.
   - To exit and leave the faxes in the memory, press `No`.
5. Press .

Transferring the Fax Journal report to another fax machine

If you have not set up your Station ID, you cannot enter fax transfer mode (see *Set your Station ID* on page 21).

1. Press ✕ to interrupt the error temporarily.
2. Press .
3. Press `All Settings`.
4. Swipe up or down, or press ▲ or ▼ to display `Service`.
5. Press `Service`.
6. Press `Data Transfer`.
7. Press `Report Transfer`.
8. Enter the fax number to which the Fax Journal report will be forwarded.
9. Press `Fax Start`.

B

Document Jams

Document is jammed in the top of the ADF unit

1. Remove any paper from the ADF that is not jammed.
2. Open the ADF cover.
3. Pull the jammed document out to the left.

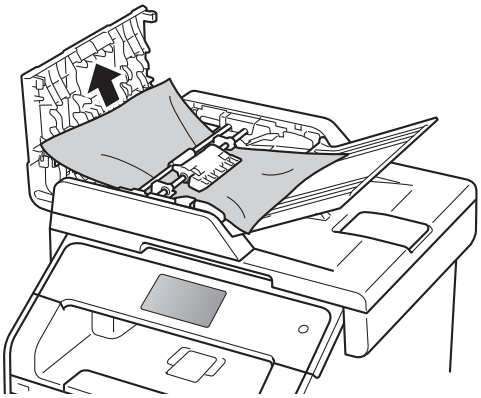

If the document rips or tears, be sure you remove all small paper scraps to prevent future jams.

4. Close the ADF cover.
5. Press ✕.

Document is jammed under the document cover

1. Remove any paper from the ADF that is not jammed.
2. Lift the document cover.
3. Pull the jammed document out to the right.

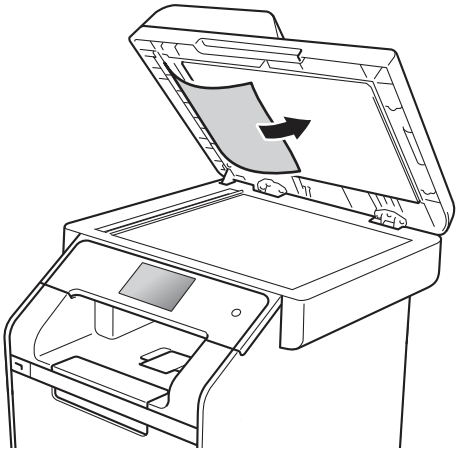

If the document rips or tears, be sure you remove all small paper scraps to prevent future jams.

4. Close the document cover.
5. Press ✕.

Removing small documents jammed in the ADF

1. Lift the document cover.
2. Insert a piece of stiff paper, such as cardstock, into the ADF to push any small paper scraps through.

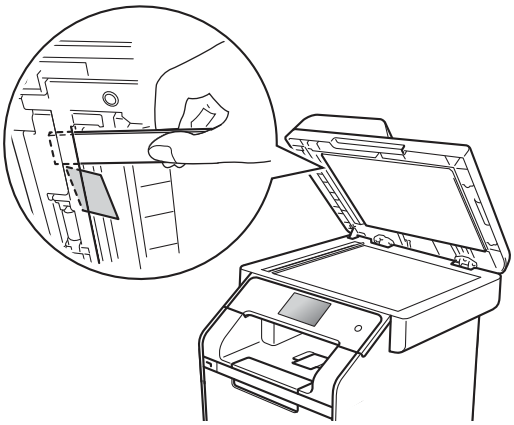

3. Close the document cover.
4. Press ✕.

Document is jammed at the output tray

1. Remove any paper from the ADF that is not jammed.
2. Pull the jammed document out to the right.

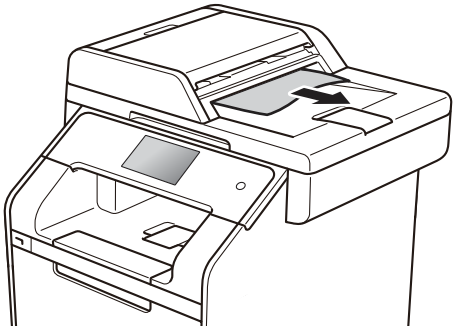

3. Press ✕.

B

Paper Jams

Always remove the remaining paper from the paper tray and straighten the stack when you are adding new paper. This helps prevent multiple sheets of paper from feeding through the machine at one time and prevents paper jams.

Paper is jammed in the multi-purpose tray

If the Touchscreen displays `Jam MP Tray`, follow these steps:

1. Remove the paper from the MP tray.
2. Remove any jammed paper from in and around the MP tray.

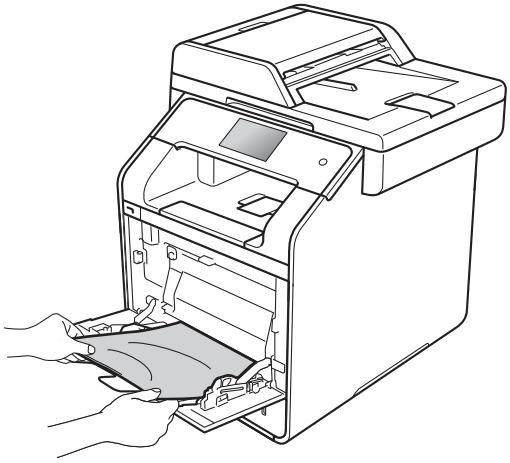

3. Fan the paper stack, and then put it back in the MP tray.

4. When loading paper in the MP tray, make sure that the paper stays under the maximum paper height guides (1) on both sides of the tray.

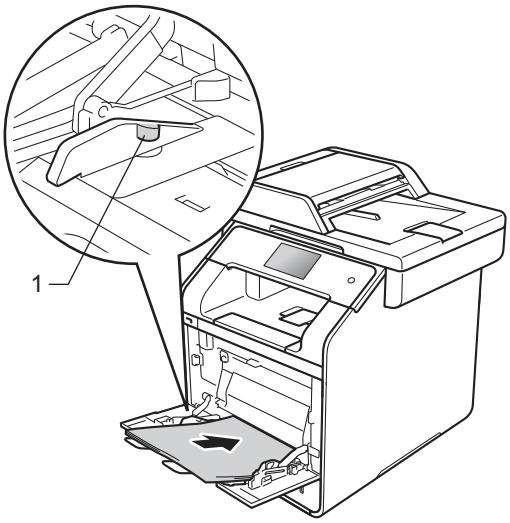

5. Press `Retry` to resume printing.

Paper is jammed in the Paper Tray 1 or Tray 2

If the Touchscreen displays `Jam Tray1` or `Jam Tray2`, follow these steps:

1. Pull the paper tray completely out of the machine.
   For `Jam Tray1`:

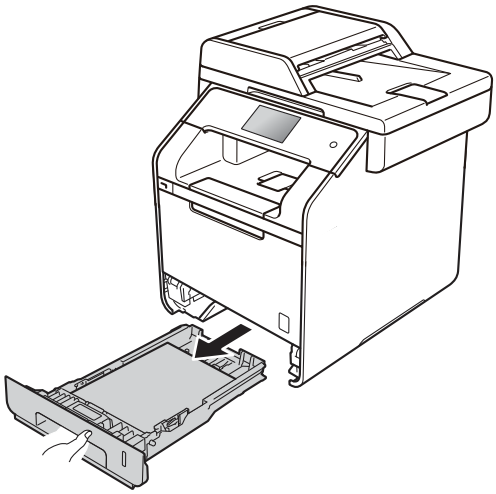

   For `Jam Tray2`:

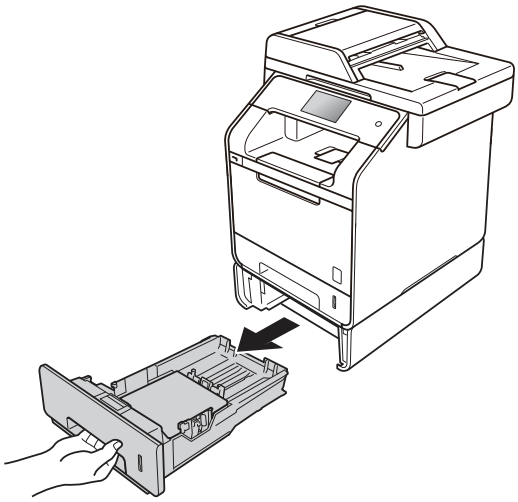

2. Use both hands to slowly pull out the jammed paper.

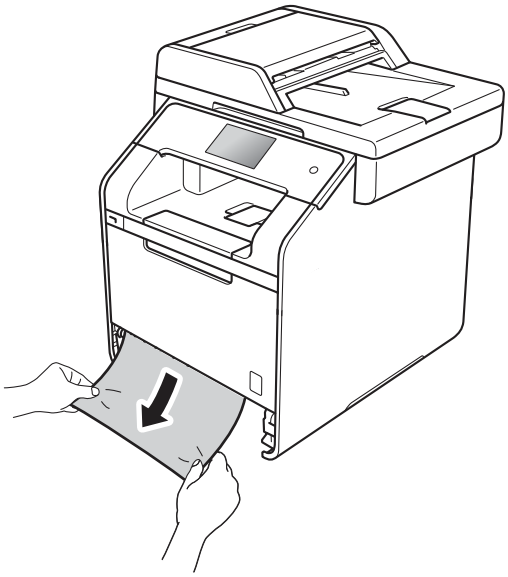

NOTE

Pulling the jammed paper downward allows you to remove the paper more easily.

3. Make sure the paper is below the maximum paper mark (▼ ▼ ▼) in the paper tray. While pressing the blue paper-guide release lever, slide the paper guides to fit the paper size. Make sure the guides are firmly in the slots.

4. Put the paper tray firmly back in the machine.

Paper is jammed at the back of the machine

If the Touchscreen displays `Jam Rear`, a paper jam occurred behind the back cover. Follow these steps:

1. Leave the machine turned on for 10 minutes for the internal fan to cool the extremely hot parts inside the machine.
2. Open the back cover.

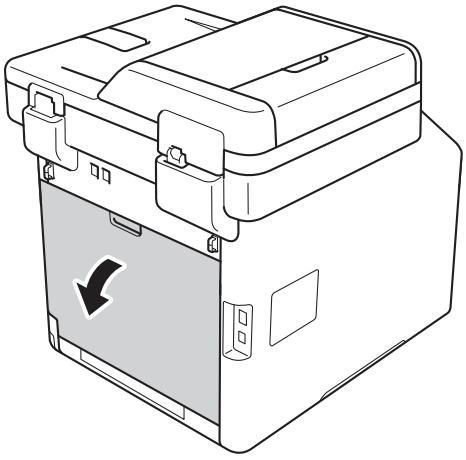

WARNING

HOT SURFACE

After you have just used the machine, some internal parts of the machine will be extremely hot. Wait for the machine to cool down before you touch the internal parts of the machine.

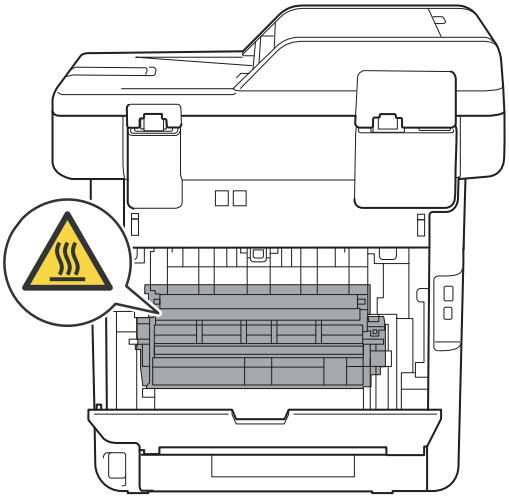

3 Pull the blue tabs (1) at the left and right sides toward you to release the fuser cover (2).

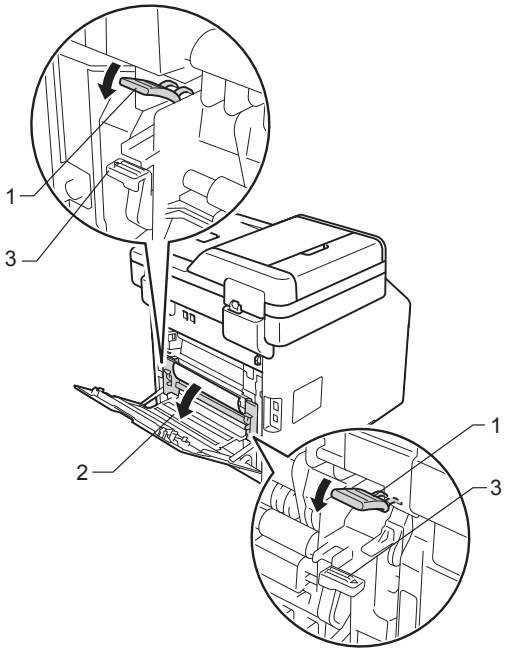

NOTE

If the envelope levers (3) inside the back cover are pulled down to the envelope position, lift these levers to the original position before pulling the blue tabs (1) down.

4 Use both hands to gently pull the jammed paper out of the fuser unit.

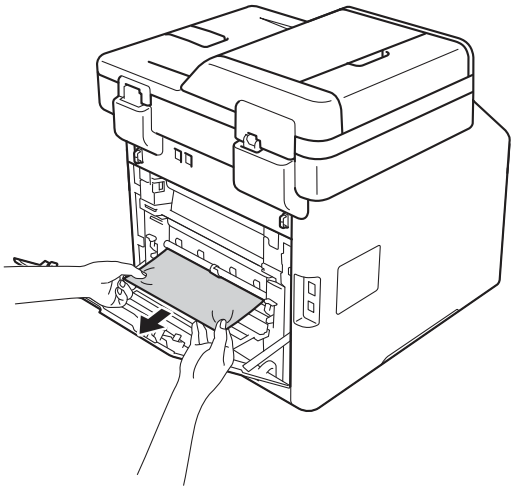

5 Close the fuser cover (2).

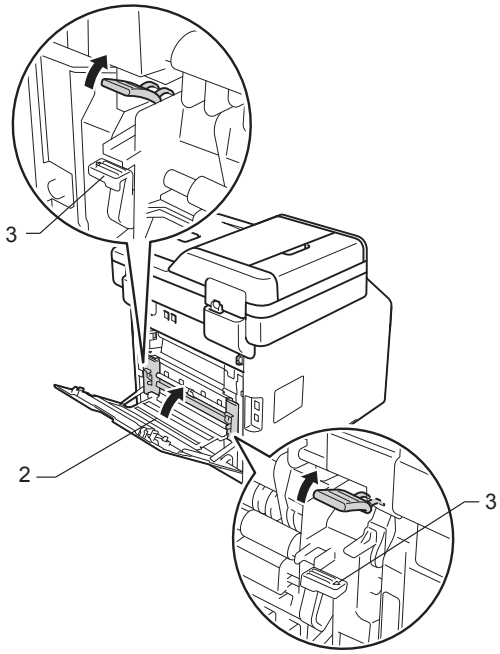

NOTE

If you print on envelopes, pull down the envelope levers (3) to the envelope position again before closing the back cover.

6 Close the back cover.

Paper is jammed inside the machine

If the Touchscreen displays `Jam Inside`, follow these steps:

1. Press the front cover release button and pull open the front cover.

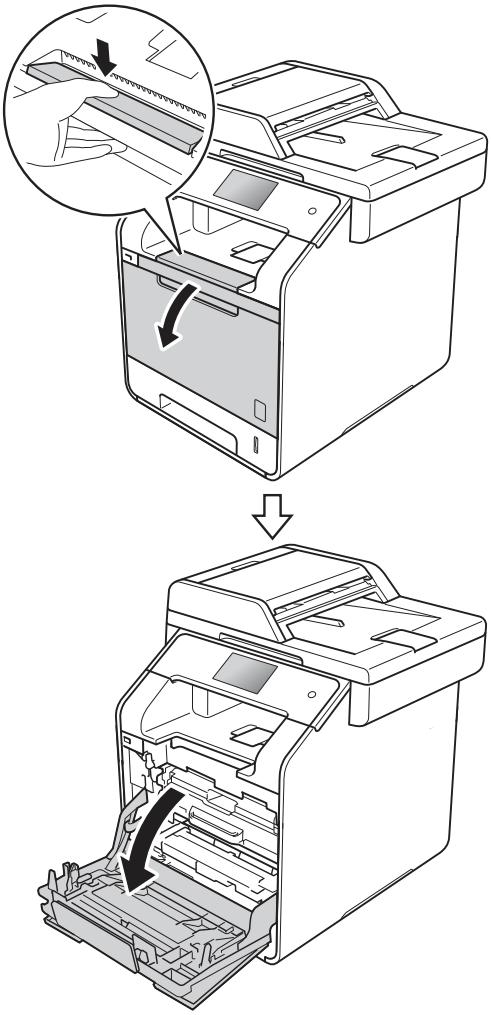

2. Hold the blue handle of the drum unit. Pull the drum unit out until it stops.

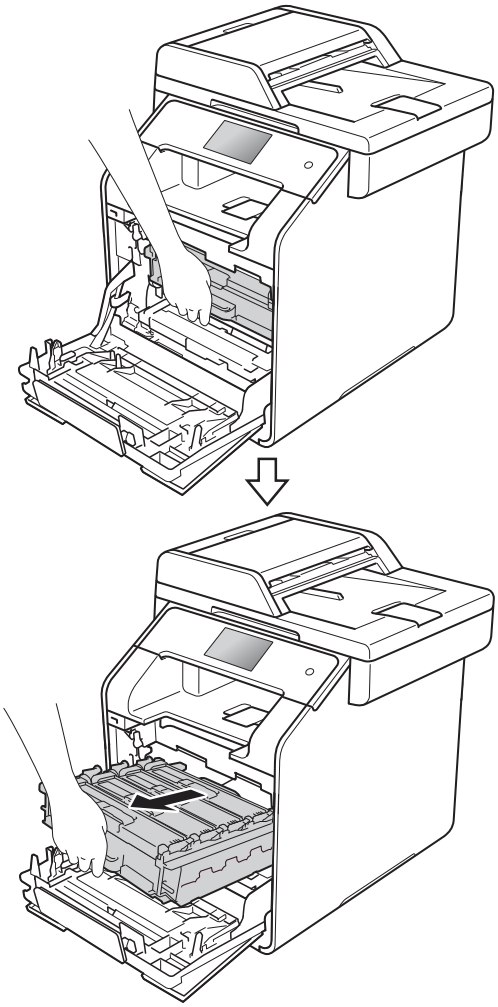

3 Turn the blue lock lever (1) at the left of the machine counterclockwise to the release position. Holding the blue handles of the drum unit, lift the front of the drum unit and remove it from the machine.

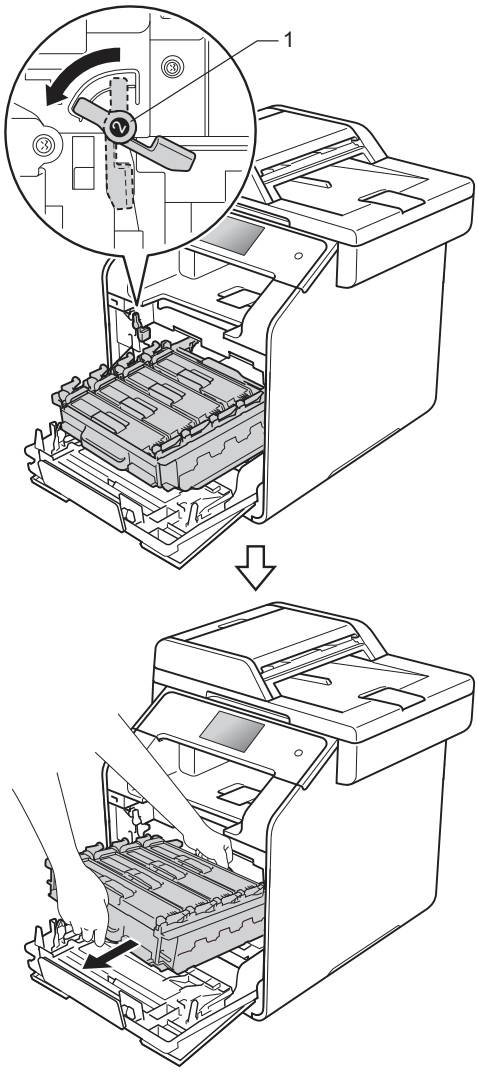

IMPORTANT

- We recommend that you place the drum unit on a piece of disposable paper or cloth in case you accidentally spill or scatter toner.
- To prevent damage to the machine from static electricity, DO NOT touch the electrodes shown in the illustration.

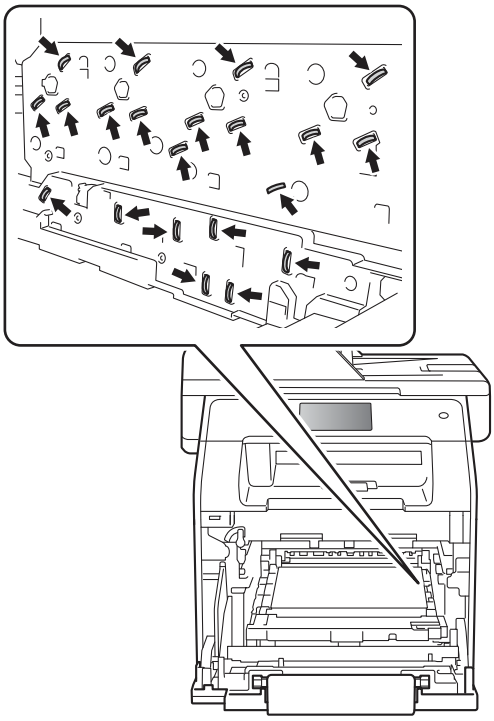

B

4 Pull out the jammed paper slowly.

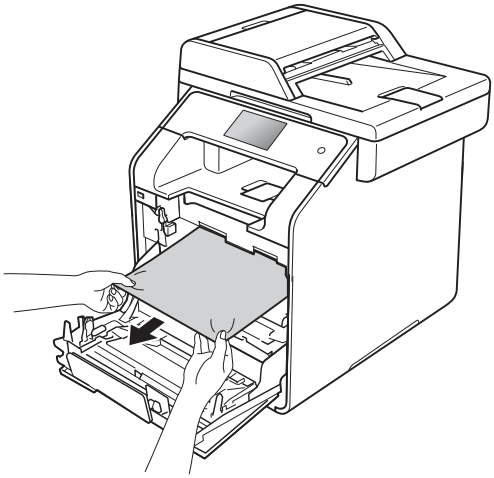

5 Make sure the blue lock lever (1) is in the release position as shown in the illustration.

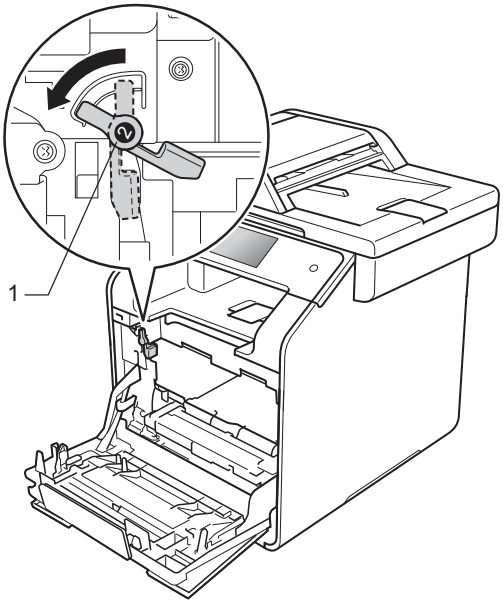

6 Gently slide the drum unit into the machine until it stops at the blue lock lever.

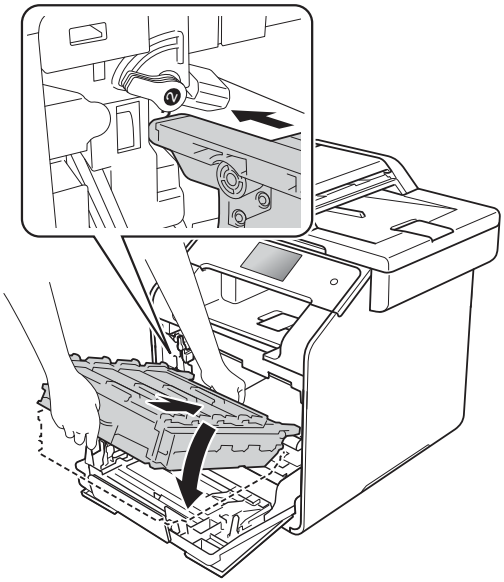

7 Turn the blue lock lever (1) clockwise to the lock position.

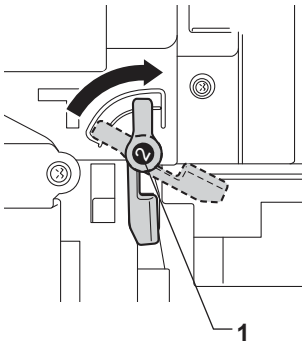

8 Push the drum unit in until it stops.

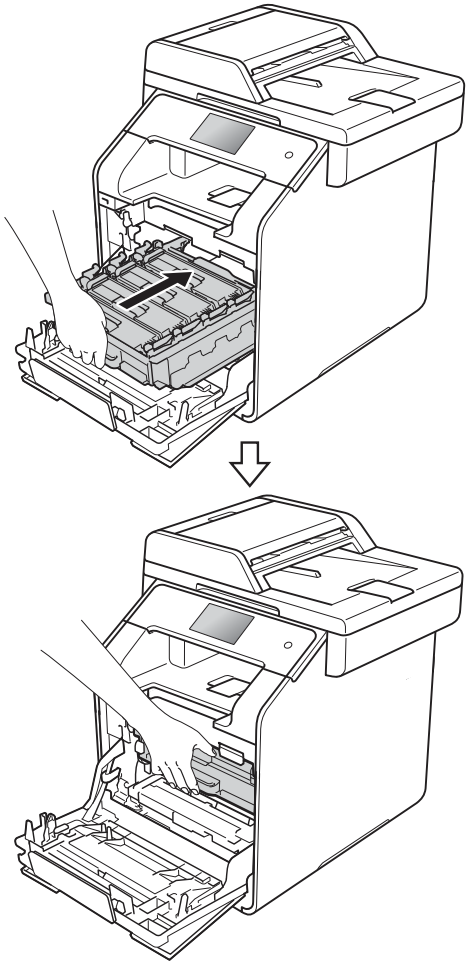

9 Close the front cover of the machine.

NOTE

If you turn off the machine while `Jam Inside` is on the Touchscreen, the machine will print incomplete data from your computer when it is turned on. Before you turn on the machine, delete the job from your computer's print spooler.

Paper is jammed underneath the paper tray

If the Touchscreen displays `Jam 2-sided`, follow these steps:

1 Leave the machine turned on for 10 minutes for the internal fan to cool the extremely hot parts inside the machine.

2 Pull the paper tray completely out of the machine.

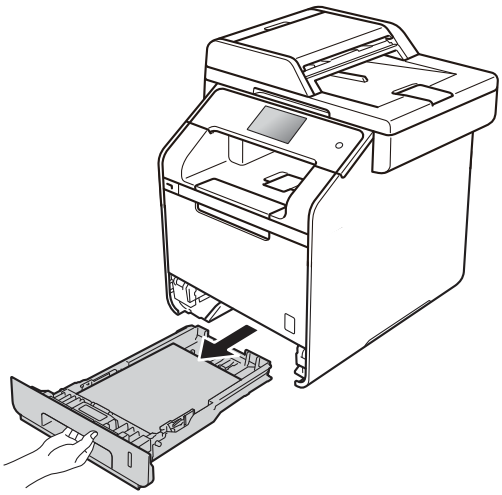

3 Make sure the jammed paper does not remain inside the machine.

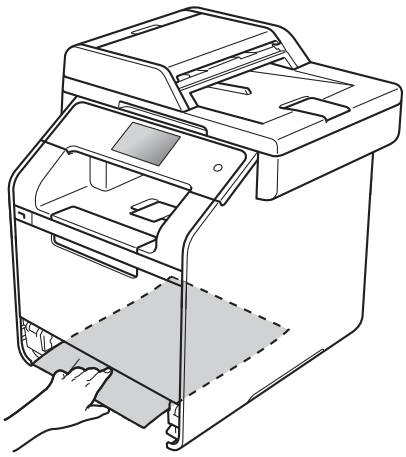

B

4 If paper is not caught inside the machine, check underneath the paper tray.

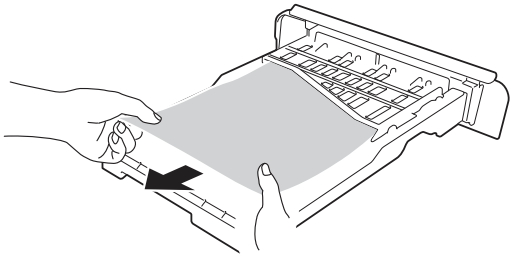

5 If the paper is not caught in the paper tray, open the back cover.

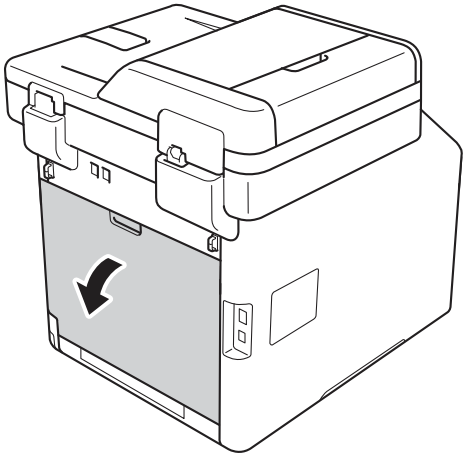

WARNING

HOT SURFACE

After you have just used the machine, some internal parts of the machine will be extremely hot. Wait for the machine to cool down before you touch the internal parts of the machine.

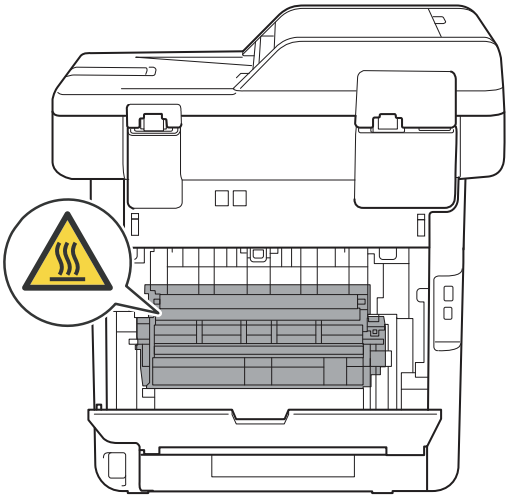

6 Use both hands to gently pull the jammed paper out of the back of the machine.

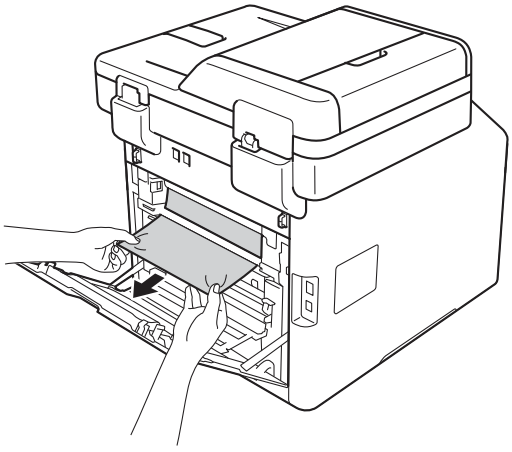

7 Close the back cover until it locks in the closed position.

8 Put the paper tray firmly back in the machine.

If you are having difficulty with your machine

IMPORTANT

- For technical help, you must call the country where you bought the machine. Calls must be made from within that country.
- If you think there is a problem with your machine, check the chart below and follow the troubleshooting tips. You can correct most problems yourself.
- If you need additional help, the Brother Solutions Center offers the latest FAQs and troubleshooting tips.

  Visit http://solutions.brother.com/.
- Using non-Brother supplies may affect the print quality, hardware performance, and machine reliability.

Printing difficulties

Difficulty	Suggestions
No printout.	Check that the correct printer driver has been installed and selected.
	Check to see if the Touchscreen is showing an error message (see *Error and maintenance messages* on page 111).
	Check that the machine is online: (Windows® 7 and Windows Server® 2008 R2) Click the (**Start**) button > **Devices and Printers**. Right-click **Brother MFC-XXXX Printer** and click **See what's printing**. Click **Printer** in the menu bar. Make sure **Use Printer Offline** is cleared. (Windows Vista® and Windows Server® 2008) Click the (**Start**) button > **Control Panel** > **Hardware and Sound** > **Printers**. Right-click **Brother MFC-XXXX Printer**. Make sure **Use Printer Online** is not listed. If it is listed, click this option to set the driver Online. (Windows® XP and Windows Server® 2003) Click the **Start** button > **Printers and Faxes**. Right-click **Brother MFC-XXXX Printer**. Make sure **Use Printer Online** is not listed. If it is listed, click this option to set the driver Online. (Windows® 8 and Windows Server® 2012) Move your mouse to the lower right corner of your desktop. When the menu bar appears, click **Settings** > **Control Panel**. In the **Hardware and Sound** (Hardware) group, click **View devices and printers**. Right-click the **Brother MFC-XXXX Printer** > **See what's printing**. If printer driver options appear, select your printer driver. Click **Printer** in the menu bar and make sure that **Use Printer Offline** is not selected. (Windows Server® 2012 R2) Click **Control Panel** on the **Start** screen. In the **Hardware** group, click **View devices and printers**. Right-click the **Brother MFC-XXXX Printer** > **See what's printing**. If printer driver options appear, select your printer driver. Click **Printer** in the menu bar and make sure that **Use Printer Offline** is not selected.
	Call your administrator to check your Secure Function Lock settings.

Printing difficulties (continued)

Difficulty	Suggestions
The machine is not printing or has stopped printing.	Press ✕. The machine will cancel the print job and clear it from the memory. The printout may be incomplete.
The headers or footers appear when the document is displayed on the screen but they are not on the printed page.	There is an unprintable area on the top and bottom of the page. Adjust the top and bottom margins in your document to allow for this (see *Unscannable and unprintable areas* on page 30).
The machine prints unexpectedly or it prints garbage.	Press ✕ to cancel print jobs.
	Check the settings in your application to make sure they are set to work with your machine.
The machine prints the first couple of pages correctly, then some pages have missing text.	Check that the print settings in your application are available in the machine's printer driver.
	Your computer is not recognizing the full signal of the machine's input buffer. Make sure you connected the interface cable correctly (see Quick Setup Guide).
The machine does not print on both sides of the paper even though the printer driver setting is 2-sided.	Check the paper size setting in the printer driver. You must choose Letter, Legal or Folio paper that is 16 to 28 lb (60 to 105 g/m^2).
The machine does not display the USB menu when a USB flash drive is connected to the USB direct interface.	When the machine is in Deep Sleep mode, the machine does not wake up even if you connect a USB flash drive to the USB direct interface. Press the Touchscreen to wake up the machine.
Cannot perform 'Page Layout' printing.	Check that the paper size setting in the application and in the printer driver are the same.
Print speed is too slow.	Try changing the printer driver setting. The highest resolution needs longer data processing, sending and printing time.
	If the machine is in Quiet mode, print speed is slower. Check the Quiet mode setting (see Advanced User's Guide).
The machine does not print from Adobe® Illustrator®.	Try to reduce the print resolution (see Software and Network User's Guide).
Poor print quality	See *Improving the print quality* on page 143.

Paper handling difficulties

Difficulty	Suggestions
The machine does not feed paper.	If the Touchscreen shows a Paper Jam message and you still have a problem, see *Error and maintenance messages* on page 111.
	If the paper tray is empty, load a new stack of paper into the paper tray.
	If there is paper in the paper tray, make sure it is straight. If the paper is curled, straighten it. Sometimes it is helpful to remove the paper, turn the stack over and put it back in the paper tray.
	Reduce the amount of paper in the paper tray, and then try again.
	Make sure **MP Tray** is not selected for **Paper Source** in the printer driver.
	Clean the paper pick-up rollers (see Advanced User's Guide).
The machine does not feed paper from the MP tray.	Make sure **MP Tray** is selected in the printer driver.
	Fan the paper well and put it back in the tray firmly.

Paper handling difficulties (continued)

Difficulty	Suggestions
How do I print on envelopes?	Load up to three envelopes at a time in the MP tray. Your application must be set to print the envelope size you are using. This is usually done in the Page Setup or Document Setup menu of your application (see your application's manual for more information).

Printing received faxes

Difficulty	Suggestions
■ Condensed print ■ Horizontal streaks ■ Top and bottom sentences are cut off ■ Missing lines	Usually this is caused by a poor telephone connection. Make a copy; if your copy looks good, you probably had a bad connection, with static or interference on the telephone line. Ask the other party to send the fax again.
Vertical black lines when receiving	The corona wires for printing may be dirty. Clean the corona wires on the drum unit (see *Cleaning the corona wires* on page 87).
	The sender's scanner may be dirty. Ask the sender to make a copy to see if the problem is with the sending machine. Try receiving from another fax machine.
Received faxes appear as split or blank pages.	Left and right margins are cut off or a single page is printed on two pages (see *Paper Size* on page 31).
	Turn on Auto Reduction (see Advanced User's Guide).

Telephone line or connections

Difficulty	Suggestions
Dialing does not work. (No dial tone)	Check all line cord connections. Make sure the telephone line cord is plugged into the telephone wall jack and the LINE jack of the machine.
	(Canada only) Change `Tone/Pulse` setting (see Advanced User's Guide).
	Send a manual fax by pressing `Hook` and dialing the number. Wait to hear fax receiving tones before pressing `Fax Start`.
	If there is no dial tone, connect a known working telephone and telephone line cord to the jack. Then lift the external telephone's handset and listen for a dial tone. If there is still no dial tone, ask your telephone company to check the line and wall jack.
The machine does not answer when called.	Make sure the machine is in the correct receive mode for your setup (see *Receive Mode settings* on page 47). Check for a dial tone. If possible, call your machine to hear it answer. If there is still no answer, check the telephone line cord connection. If you do not hear ringing when you call your machine, ask your telephone company to check the line.

Receiving Faxes

Difficulty	Suggestions
Cannot receive a fax.	Make sure your machine has a dial tone by pressing `Hook`. If you hear static or interference on your fax line, call your local telephone company.
	Check all line cord connections. Make sure the telephone line cord is plugged into the telephone wall jack and the LINE jack of the machine. If you subscribe to DSL or VoIP services, call your service provider for connection instructions.

Receiving Faxes (continued)

Difficulty	Suggestions
Cannot receive a fax. (continued)	Make sure the machine is in the correct Receive Mode. This is determined by the external devices and telephone subscriber services you have on the same line as the Brother machine (see *Receive Mode settings* on page 47). ■ If you have a dedicated fax line and want your Brother machine to automatically answer all incoming faxes, you should select `Fax` mode. ■ If your Brother machine shares a line with an external answering machine, you should select the `External TAD` mode. In `External TAD` mode, your Brother machine will automatically receive incoming faxes and voice callers will be able to leave a message on your answering machine. ■ If your Brother machine shares the line with a Voice Mail subscriber service, see *Voice Mail* on page 54. ■ If your Brother machine is on a line with the Distinctive Ring subscriber service, see *Distinctive Ring* on page 55. ■ If your Brother machine shares a line with other telephones and you want it to automatically answer all incoming faxes, you should select the `Fax/Tel` mode. In `Fax/Tel` mode, your Brother machine will automatically receive faxes and produce a pseudo/double-ring to alert you to answer voice calls. ■ If you do not want your Brother machine to automatically answer any incoming faxes, you should select the `Manual` mode. In `Manual` mode, you must answer every incoming call and activate the machine to receive faxes.
	Another device or service at your location may be answering the call before your Brother machine answers. To test this, lower the ring delay setting: ■ If the answer mode is set to `Fax` or `Fax/Tel`, reduce the ring delay to 1 ring (see *Ring Delay* on page 47). ■ If the answer mode is set to `External TAD`, reduce the number of rings programmed on your answering machine to two. ■ If the answer mode is set to `Manual`, DO NOT adjust the ring delay setting.
	Have someone send you a test fax: ■ If you received the test fax successfully, your machine is operating correctly. Remember to reset your ring delay or answering machine setting back to your original setting. If receiving problems recur after resetting the ring delay, then a person, device, or subscriber service is answering the fax call before the machine has a chance to answer. ■ If you were not able to receive the fax, then another device or subscriber service may be interfering with your fax reception or there may be a problem with your fax line.

Receiving Faxes (continued)

Difficulty	Suggestions
Cannot receive a fax. (continued)	If you are using a telephone answering machine (`External TAD` mode) on the same line as the Brother machine, make sure your answering machine is set up correctly (see *Connecting an external TAD (telephone answering device)* on page 57). 1 Plug the telephone line cord directly from the wall telephone jack to your Brother machine's LINE jack. 2 Remove the protective cap from your Brother machine's EXT jack, and then plug the telephone line cord from your answering machine into the EXT jack. 3 Set your answering machine to answer within 4 rings. If you are having problems receiving faxes or voice messages, set your answering machine to answer within 2 or 3 rings. 4 Record the outgoing message on your answering machine. ■ Record five seconds of silence at the beginning of your outgoing message. ■ Limit your speaking to 20 seconds. ■ End your outgoing message with your Fax Receive Code for people sending manual faxes. For example: "After the beep, leave a message or press ∗**51** and Start to send a fax." 5 Set your answering machine to answer calls. 6 Set your Brother machine's Receive Mode to `External TAD` (see *Receive Mode settings* on page 47).
	Make sure your Brother machine's Easy Receive feature is turned On. Easy Receive is a feature that allows you to receive a fax even if you answered the call on an external or extension telephone (see *Easy Receive* on page 48).
	If you often get transmission errors due to possible interference on the telephone line, try changing the Compatibility setting to `Basic(for VoIP)` (see *Telephone line interference / VoIP* on page 142).
	Call your administrator to check your Secure Function Lock Settings.

Sending faxes

Difficulty	Suggestions
Cannot send a fax.	Check all line cord connections. Make sure the telephone line cord is plugged into the telephone wall jack and the LINE jack of the machine.
	Make sure you pressed `Fax` and the machine is in Fax mode (see *How to send a fax* on page 41).
	Print the Transmission Verification Report and check for an error (see Advanced User's Guide).
	Call your administrator to check your Secure Function Lock Settings.
	Ask the other party to check that the receiving machine has paper.
Poor sending quality.	Try changing your resolution to `Fine` or `S.Fine`. Make a copy to check your machine's scanner operation. If the copy quality is not good, clean the scanner (see Advanced User's Guide).

Sending faxes (continued)

Difficulty	Suggestions
Transmission Verification Report says RESULT:NG.	There is probably temporary noise or static on the line. Try sending the fax again. If you are sending a PC-FAX message and get RESULT:NG on the Transmission Verification Report, your machine may be out of memory. To free up extra memory, you can turn off fax storage (see Advanced User's Guide), print fax messages in memory (see Advanced User's Guide) or cancel a delayed fax (see Advanced User's Guide). If the problem continues, ask the telephone company to check your telephone line.
	If you often get transmission errors due to possible interference on the telephone line, try changing the Compatibility setting to Basic(for VoIP) (see *Telephone line interference / VoIP* on page 142).
Sent faxes are blank.	Make sure you are loading the document correctly. When using the ADF, the document should be *face up*. When using the scanner glass, the document should be *face down* (see *Loading documents* on page 39).
Vertical black lines when sending.	Black vertical lines on faxes you send are typically caused by dirt or correction fluid on the glass strip (see Advanced User's Guide).

Handling incoming calls

Difficulty	Suggestions
The machine 'Hears' a voice as a CNG Tone.	If Easy Receive is set to On, your machine is more sensitive to sounds. It may mistakenly interpret certain voices or music on the line as a fax machine calling and respond with fax receiving tones. Deactivate the machine by pressing ✕. Try avoiding this problem by turning Easy Receive to Off (see *Easy Receive* on page 48).
Sending a Fax Call to the machine.	If you answered on an external or extension telephone, press your Fax Receive Code (the factory setting is ∗51). If you answered on the external telephone (connected to the EXT. jack), press Fax Start to receive the fax. When your machine answers, hang up.
Custom features on a single line.	If you have Call Waiting, Call Waiting/Caller ID, Caller ID, RingMaster, Voice Mail, an answering machine, an alarm system or other custom feature on a single telephone line with your machine, it may create a problem sending or receiving faxes. **For Example:** If you subscribe to Call Waiting or some other custom service and its signal comes through the line while your machine is sending or receiving a fax, the signal can temporarily interrupt or disrupt the faxes. Brother's ECM (Error Correction Mode) feature should help overcome this problem. This condition is related to the telephone system industry and is common to all devices that send and receive information on a single, shared line with custom features. If avoiding a slight interruption is crucial to your business, a separate line with no custom features is recommended.

Copying difficulties

Difficulty	Suggestions
Cannot make a copy.	Make sure you pressed Copy and the machine is in Copy mode (see *How to copy* on page 65).
	Call your administrator to check your Secure Function Lock Settings.

Copying difficulties (continued)

Difficulty	Suggestions
Vertical black line appears in copies.	Black vertical lines on copies are typically caused by dirt or correction fluid on the glass strip, or the corona wires are dirty. Clean the glass strip and scanner glass and the white bar and white plastic above them (see *Cleaning the corona wires* on page 87 and Advanced User's Guide).
Copies are blank.	Make sure you are loading the document correctly (see *Using the automatic document feeder (ADF)* on page 39 or *Using the scanner glass* on page 40).

Scanning difficulties

Difficulty	Suggestions
TWAIN or WIA errors appear when starting to scan. (Windows®)	Make sure the Brother TWAIN or WIA driver is selected as the primary source in your scanning application. For example, in Nuance™ PaperPort™ 12SE, click **Desktop** > **Scan Settings** > **Select** to choose the Brother TWAIN/WIA driver.
TWAIN or ICA errors appear when starting to scan. (Macintosh)	Make sure the Brother TWAIN driver is selected as the primary source. In PageManager, click **File** > **Select Source** and choose the Brother TWAIN driver. Macintosh can also scan documents using the ICA Scanner Driver (see Software and Network User's Guide).
OCR does not work.	Try increasing the scanning resolution. (Macintosh) Make sure you downloaded and installed Presto! PageManager from http://nj.newsoft.com.tw/download/brother/PM9SEInstaller_BR_multilang.dmg
Network scanning does not work.	see *Network difficulties* on page 140.
Cannot scan.	Call your administrator to check your Secure Function Lock Settings.

Software difficulties

Difficulty	Suggestions
Cannot install software or print.	**(Windows® only)** Run the **Repair MFL-Pro Suite** program on the CD-ROM. This program will repair and reinstall the software.

Network difficulties

Difficulty	Suggestions
Cannot print and scan over a network after completing the software installation.	When the *Cannot print to the networked printer.* screen appears, follow the on-screen instructions. If the problem is not solved, see Software and Network User's Guide.
The network scanning feature does not work.	**(Windows® and Macintosh)** The network scanning feature may not work due to the firewall settings. Change or disable the firewall settings. It is necessary to set the third-party Security/Firewall Software to allow Network scanning. To add port 54925 for Network scanning, enter the information below: ■ In Name: Enter any description, for example Brother NetScan. ■ In Port number: Enter 54925. ■ In Protocol: Make sure UDP is selected. See the instruction manual that came with your third-party Security/Firewall Software or call the software manufacturer. For more information, you can read FAQs and troubleshooting suggestions at http://solutions.brother.com/.
	(Macintosh) Re-select your machine in the **Device Selector** window from the Model pop-up menu in the main screen of **ControlCenter2**.
The network PC-FAX Receive feature does not work.	**(Windows® only)** It is necessary to set the third-party Security/Firewall Software to allow PC-FAX Rx. To add port 54926 for Network PC-FAX Rx, enter the information below: ■ In Name: Enter any description, for example Brother PC-FAX Rx. ■ In Port number: Enter 54926. ■ In Protocol: Make sure UDP is selected. See the instruction manual that came with your third-party Security/Firewall Software or call the software manufacturer. For more information, read FAQs and troubleshooting suggestions at http://solutions.brother.com/.
The Brother software cannot be installed.	**(Windows®)** If the Security Software warning appears on the computer screen during the installation, change the Security Software settings to permit the Brother product setup program or other program to run. **(Macintosh)** If you are using a firewall function of anti-spyware or antivirus security software, temporarily disable it and then install the Brother software.
Cannot connect to the wireless network.	Investigate the problem using the `WLAN Report`. Press , `All Settings`, `Print Reports`, `WLAN Report` and then press `OK` (see Software and Network User's Guide).

Other difficulties

Difficulty	Suggestions
The machine will not turn on.	Adverse conditions on the power connection (such as lightning or a power surge) may have triggered the machine's internal safety mechanisms. Press and hold down to turn off the machine and unplug the power cord. Wait for ten minutes, then plug in the power cord and press to turn on the machine. If the problem is not solved, turn off the machine. If you are using a backup battery or surge suppressor device, disconnect it to make sure it is not the problem. Plug the machine's power cord directly into a different known working wall outlet and press to turn on the machine.
The machine cannot print EPS data that includes binary with the BR-Script3 printer driver.	**(Windows®)** To print EPS data, do the following: 1 Windows® 7 and Windows Server® 2008 R2: Click the (**Start**) button > **Devices and Printers**. Windows Vista® and Windows Server® 2008: Click the (**Start**) button > **Control Panel** > **Hardware and Sound** > **Printers**. Windows® XP and Windows Server® 2003: Click the **Start** button > **Printers and Faxes**. Windows® 8 and Windows Server® 2012: Move your mouse to the lower right corner of your desktop. When the menu bar appears, click **Settings** > **Control Panel**. In the **Hardware and Sound** [1] group, click **View devices and printers**. Windows Server® 2012 R2: Click **Control Panel** on the **Start** screen. In the **Hardware** group, click **View devices and printers**. 2 Right-click the **Brother MFC-XXXX BR-Script3** icon, select **Printer properties**. [2] 3 From the **Device Settings** tab, choose **TBCP** (Tagged binary communication protocol) in **Output Protocol**. **(Macintosh)** If your machine is connected to a computer with a USB interface, you cannot print EPS data that includes binary. You can print the EPS data at the machine through a network. For help installing the BR-Script3 printer driver through the network, visit the Brother Solutions Center at http://solutions.brother.com/.

1 Windows Server® 2012 and Windows Server® 2012 R2: **Hardware**.

2 Windows® XP, Windows Vista®, Windows Server® 2003 and Windows Server® 2008: **Properties**.

Setting Dial Tone detection

Setting the Dial Tone to `Detection` will shorten the Dial Tone detect pause.

1. Press .
2. Press `All Settings`.
3. Swipe up or down, or press ▲ or ▼ to display `Initial Setup`.
4. Press `Initial Setup`.
5. Swipe up or down, or press ▲ or ▼ to display `Dial Tone`.
6. Press `Dial Tone`.
7. Press `Detection` or `No Detection`.
8. Press .

Telephone line interference / VoIP

If you are having difficulty sending or receiving a fax due to possible interference on the telephone line, we recommend that you adjust the Equalization for compatibility to reduce the modem speed for fax operations.

1. Press .
2. Press `All Settings`.
3. Swipe up or down, or press ▲ or ▼ to display `Initial Setup`.
4. Press `Initial Setup`.
5. Swipe up or down, or press ▲ or ▼ to display `Compatibility`.
6. Press `Compatibility`.
7. Press `High`, `Normal` or `Basic(for VoIP)`.
   - `Basic(for VoIP)` reduces the modem speed to 9600 bps and turns off ECM (error correction mode). Unless interference is a recurring problem on your telephone line, you may prefer to use it only when needed.

     To improve compatibility with most VoIP services, Brother recommends changing the compatibility setting to `Basic(for VoIP)`.
   - `Normal` sets the modem speed at 14400 bps.
   - `High` sets the modem speed at 33600 bps.
8. Press .

NOTE

VoIP (Voice over IP) is a type of phone system that uses an Internet connection, rather than a traditional phone line.

Improving the print quality

If you have a print quality problem, print a test page first (, All Settings, Printer, Print Options, Test Print). If the printout looks good, the problem is probably not the machine. Check the interface cable connections and try printing a different document. If the printout or test page printed from the machine has a quality problem, check the following steps first. And then, if you still have a print quality problem, check the chart below and follow the recommendations.

NOTE

Using non-Brother supplies may affect the print quality, hardware performance, and machine reliability.

1. To get the best print quality, we suggest using recommended paper. Make sure you use paper that meets our specifications (see *Acceptable paper and other print media* on page 34).
2. Check that the drum unit and toner cartridges are installed correctly.

Examples of poor print quality	Recommendation
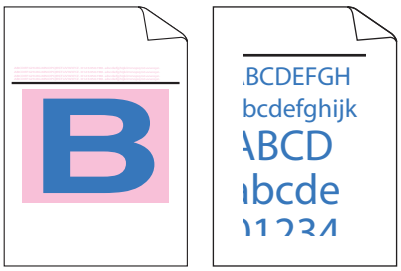 **Printed pages are compressed, horizontal stripes appear, or characters in the top, bottom, left and right margins are cut off**	■ Adjust the print margins on your application and reprint the document.
 Colored letters and thin characters in the original document are light or faint in the copy	■ Choose Text or Receipt in the copy quality setting (see Advanced User's Guide). ■ Adjust the copy density and contrast (see Advanced User's Guide).

B

Examples of poor print quality	Recommendation
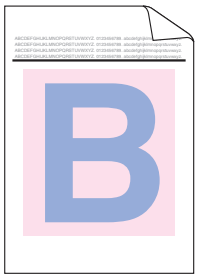 **Colors are light or faint on the whole page**	■ Perform the calibration using the Touchscreen or the printer driver (see Advanced User's Guide). ■ Adjust the copy density and contrast if you are copying (see Advanced User's Guide). ■ Make sure Toner Save mode is off in the Touchscreen or the printer driver. ■ Make sure the media type setting in the driver matches the type of paper you are using (see *Acceptable paper and other print media* on page 34). ■ Shake all four toner cartridges gently. ■ Wipe the laser scanner windows with a *dry* lint free soft cloth (see Advanced User's Guide).
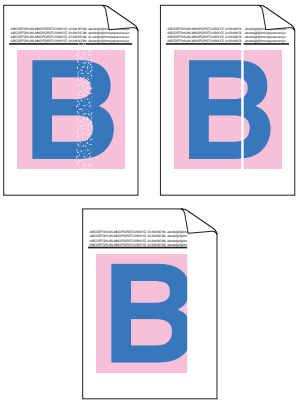 **White streaks or bands down the page**	■ Wipe the laser scanner windows with a *dry* lint free soft cloth (see Advanced User's Guide). ■ Wipe the scanner glass strip with a *dry* lint free soft cloth (see Advanced User's Guide). ■ Make sure foreign material such as a torn piece of paper, sticky notes or dust is not inside the machine or around the drum unit and toner cartridge.

Examples of poor print quality	Recommendation
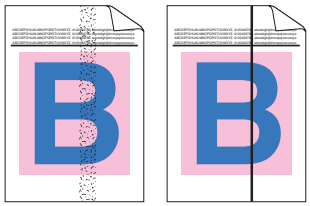 **Colored streaks or bands down the page**	■ Wipe the scanner glass strip with a *dry* lint free soft cloth (see Advanced User's Guide). ■ Clean all four corona wires (one for each color) inside the drum unit by sliding the blue tab (see *Cleaning the corona wires* on page 87). ■ Make sure the blue tab of the corona wire is at the home position (1). 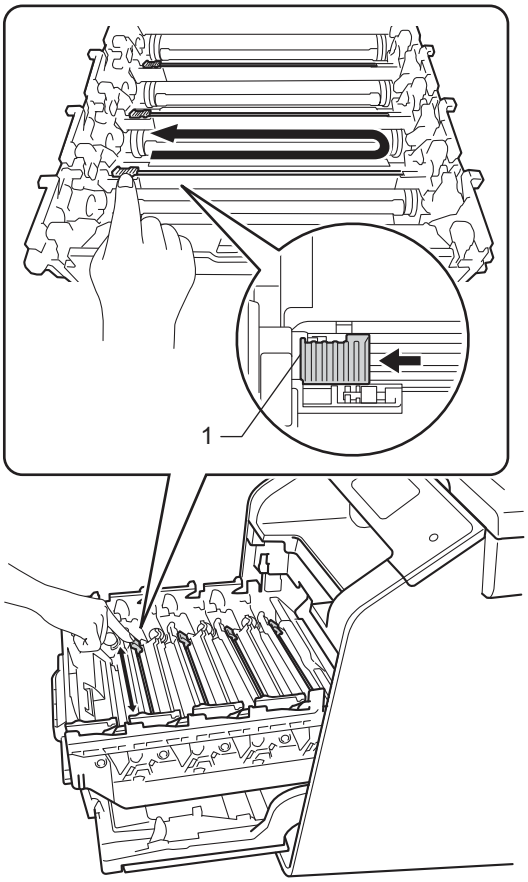 ■ Replace the toner cartridge that matches the color of the streak or band (see *Replacing the toner cartridges* on page 82). To identify the color of the toner cartridge, visit http://solutions.brother.com/ to view our FAQs and troubleshooting tips. ■ Put in a new drum unit (see *Replacing the drum unit* on page 90.)

Examples of poor print quality	Recommendation
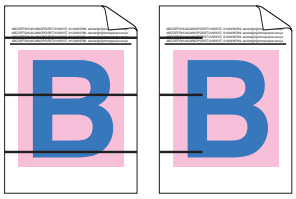 **Colored lines across the page**	■ If colored lines appear at 1.2 in. (30 mm) intervals, identify the color causing the problem and replace the toner cartridge that matches the color of the line (see *Replacing the toner cartridges* on page 82). To identify the color of the toner cartridge, visit http://solutions.brother.com/ to view our FAQs and troubleshooting tips. ■ If colored lines appear at 3.7 in. (94 mm)intervals, put a new drum unit (see *Replacing the drum unit* on page 90).
 White spots or hollow print	■ Make sure the media type setting in the driver matches the type of paper you are using (see *Acceptable paper and other print media* on page 34). ■ Check the machine's environment. Conditions such as high humidity can cause hollow print (see Product Safety Guide). ■ If the problem is not solved after printing a few pages, foreign material, such as glue from a label, may be stuck on the drum surface (see Advanced User's Guide). ■ Put in a new drum unit (see *Replacing the drum unit* on page 90).
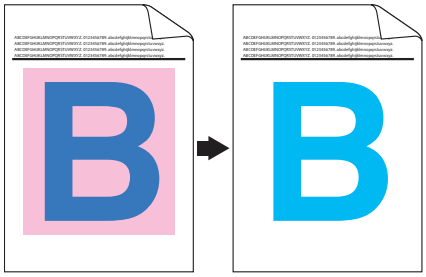 **Blank page or some colors are missing**	■ Identify the color causing the problem and put in a new toner cartridge (see *Replacing the toner cartridges* on page 82). To identify the color of the toner cartridge, visit http://solutions.brother.com/ to view our FAQs and troubleshooting tips. ■ Put in a new drum unit (see *Replacing the drum unit* on page 90).
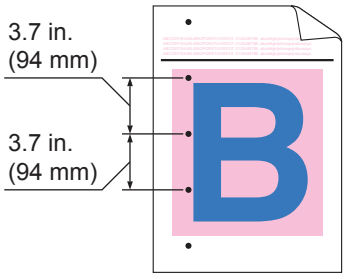 **Colored spots at 3.7 in. (94 mm)**	■ If the problem is not solved after printing a few blank pages, foreign material, such as glue from a label, may be stuck on the drum surface. Clean the drum unit (see Advanced User's Guide). ■ Put in a new drum unit (see *Replacing the drum unit* on page 90).

Examples of poor print quality	Recommendation
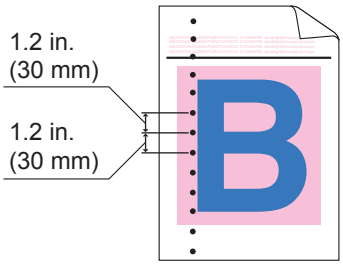 **Colored spots at 1.2 in. (30 mm)**	■ Identify the color causing the problem and put in a new toner cartridge (see *Replacing the toner cartridges* on page 82). To identify the color of the toner cartridge, visit http://solutions.brother.com/ to view our FAQs and troubleshooting tips.
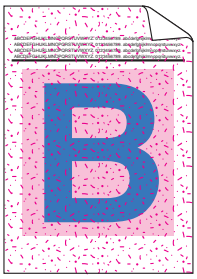 **Toner scatter or toner stain**	■ Check the machine's environment. Conditions such as high humidity and high temperatures may cause this print quality problem. ■ Identify the color causing the problem and put in a new toner cartridge (see *Replacing the toner cartridges* on page 82). To identify the color of the toner cartridge, visit http://solutions.brother.com/ to view our FAQs and troubleshooting tips. ■ Put in a new drum unit (see *Replacing the drum unit* on page 90).
The color of your printouts is not what you expected	■ To improve the color density, calibrate the colors using first the Touchscreen and then the printer driver (see Advanced User's Guide). ■ To adjust the print position of colors for sharper edges, perform the color registration using the Touchscreen (see Advanced User's Guide). ■ Adjust the copy density and contrast if you are copying (see Advanced User's Guide). ■ Make sure Toner Save mode is off in the Touchscreen or the printer driver (see Software and Network User's Guide). ■ If the print quality is poor, clear the **Improve Gray Color** check box in the printer driver (see Software and Network User's Guide). ■ If the print quality of the black portion is not what you expected, select the **Enhance Black Printing** check box in the printer driver (see Software and Network User's Guide). ■ Identify the color causing the problem and put in a new toner cartridge (see *Replacing the toner cartridges* on page 82). To identify the color of the toner cartridge, visit http://solutions.brother.com/ to view our FAQs and troubleshooting tips. ■ Put in a new drum unit (see *Replacing the drum unit* on page 90).

Examples of poor print quality	Recommendation
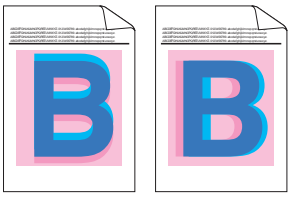 **Color misregistration**	■ Make sure the machine is on a solid level surface. ■ Perform the color registration using the Touchscreen (see Advanced User's Guide). ■ Put in a new drum unit (see *Replacing the drum unit* on page 90). ■ Put in a new belt unit (see *Replacing the belt unit* on page 96).
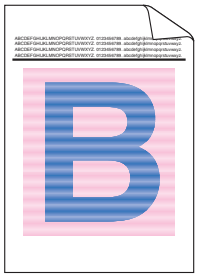 **Uneven density appears periodically across the page**	■ Perform the calibration using the Touchscreen or the printer driver (see Advanced User's Guide). ■ Adjust the copy density and contrast if you are copying (see Advanced User's Guide). ■ Clear the **Improve Gray Color** check box in the printer driver. (See Software and Network User's Guide.) ■ Identify the color causing the problem and put in a new toner cartridge (see *Replacing the toner cartridges* on page 82). To identify the color of the toner cartridge, visit http://solutions.brother.com/ to view our FAQs and troubleshooting tips. ■ Put in a new drum unit (see *Replacing the drum unit* on page 90).
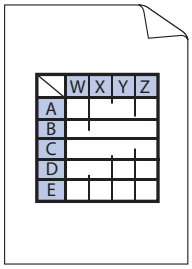 **Missing thin lines in images**	■ Make sure Toner Save mode is off in the Touchscreen or the printer driver (see Software and Network User's Guide). ■ Change the print resolution.
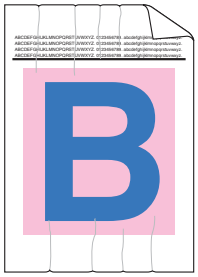 **Wrinkled**	■ Make sure the back cover is closed correctly. ■ Make sure the two gray levers inside the back cover are in the up position. ■ Make sure the media type setting in the driver matches the type of paper you are using (see *Acceptable paper and other print media* on page 34).

Examples of poor print quality	Recommendation
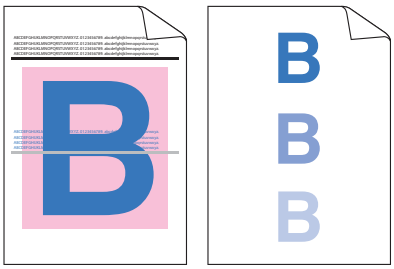 **Ghost**	■ Check the machine's environment. Conditions such as low humidity and low temperatures may cause this print quality problem (see Product Safety Guide). ■ Make sure the media type setting in the driver matches the type of paper you are using (see *Acceptable paper and other print media* on page 34). ■ Make sure the two gray levers inside the back cover are in the up position. ■ Put in a new drum unit (see *Replacing the drum unit* on page 90).
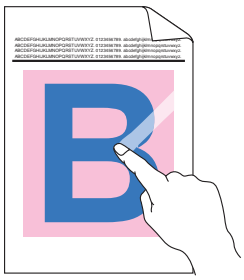 **Poor fixing**	■ Make sure the two gray levers inside the back cover are in the up position. ■ Make sure the media type setting in the driver matches the type of paper you are using (see *Acceptable paper and other print media* on page 34). ■ Choose **Improve Toner Fixing** mode in the printer driver (see Software and Network User's Guide). If this selection does not provide enough improvement, change the printer driver setting in **Media Type** to a thick setting. If you are printing an envelope, choose **Env. Thick** in the media type setting.
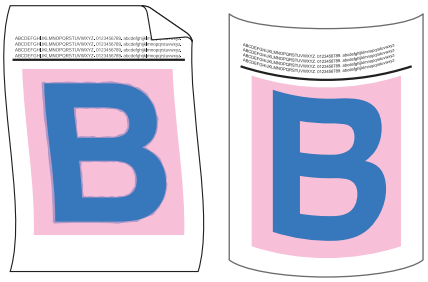 **Curled or wavy**	■ Choose **Reduce Paper Curl** mode in the printer driver (see Software and Network User's Guide). If the problem is not solved, choose **Plain Paper** in the media type setting. If you are printing an envelope, choose **Env. Thin** in the media type setting. ■ If you do not use the machine often, the paper may have been in the paper tray too long. Turn over the stack of paper in the paper tray. Also, fan the paper stack and then rotate the paper 180° in the paper tray. ■ Store the paper where it will not be exposed to high temperatures and high humidity. ■ Open the back cover (face-up output tray) to let the printed paper exit onto the face-up output tray.

Examples of poor print quality	Recommendation
 Envelope Creases	■ Make sure the envelope levers inside the back cover are pulled down to the envelope position when you print envelopes (see *Loading paper in the multi-purpose tray (MP tray)* on page 25). **NOTE** When you have finished printing, open the back cover and reset the two gray levers back to their original positions (1) by lifting them up until they stop. 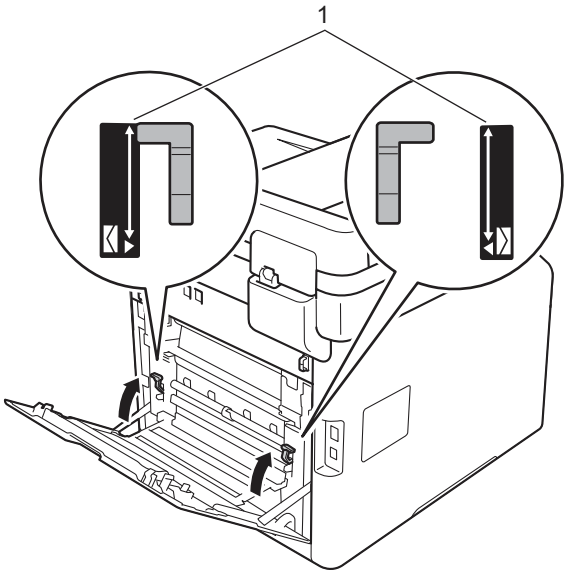 ■ If creases occur with the envelope levers in the envelope position, print with the back cover opened and feed one envelope at a time from the MP tray.

Machine Information

Checking the Serial Number

You can see the machine's Serial Number on the Touchscreen.

1. Press .
2. Press `All Settings`.
3. Swipe up or down, or press ▲ or ▼ to display `Machine Info.`.
4. Press `Machine Info.`.
5. Press `Serial No.`.
6. The Touchscreen displays the machine's Serial Number.
7. Press .

Checking the Firmware Version

You can see the machine's firmware version on the Touchscreen.

1. Press .
2. Press `All Settings`.
3. Swipe up or down, or press ▲ or ▼ to display `Machine Info.`.
4. Press `Machine Info.`.
5. Press `Firmware Version`.
6. The Touchscreen displays the machine's firmware version.
7. Press .

Reset operations

The following reset functions are available:

1 `Machine Reset`

You can reset the machine partially back to its factory settings. The settings that will *not* be reset are Station ID, Address Book, Reports, Setting Lock, Secure Function Lock and the Network settings.

2 `Network`

You can reset the internal print server back to the factory settings by resetting only the network information (such as the password and IP address).

3 `Address Book & Fax`

This operation resets the following settings:

- Address Book

  (Addresses and Groups)
- Programmed fax jobs in the memory

  (Delayed Fax, Batch TX)
- Station ID

  (name and number)
- Coverpage Msg

  (comments)
- Remote Fax Options

  (Remote Access Code, Fax Storage, Fax Forwarding, Paging, PC-FAX Send, and PC-FAX Receive (Windows® only))
- Call History

  (incoming and outgoing calls)
- Report

  (Transmission Verification Report/ Fax Journal)
- Setting Lock password

B

4 `All Settings`

You can reset all the machine's settings quickly back to the settings that were set at the factory.

5 `Factory Reset`

This operation resets *all* the machine's settings back to the defaults set at the factory. `Factory Reset` takes more time than `All Settings`.

Brother strongly recommends you perform this operation when you dispose of the machine.

NOTE

Unplug the interface cable before you choose `Network`, `All Settings` or `Factory Reset`.

How to reset the machine

1. Press .
2. Press `All Settings`.
3. Swipe up or down, or press ▲ or ▼ to display `Initial Setup`.
4. Press `Initial Setup`.
5. Swipe up or down, or press ▲ or ▼ to display `Reset`.
6. Press `Reset`.
7. Swipe up or down, or press ▲ or ▼ to display `Machine Reset`, `Network`, `Address Book & Fax`, `All Settings` or `Factory Reset`, and then press the option you want.
8. Do one of the following;
   - To reset the settings, press `Yes` and go to step ❾.
   - To exit without making changes, press `No` and go to step ❿.
9. You will be asked to reset the machine. Do one of the following;
   - To reset the machine press `Yes` for 2 seconds. The machine will begin the reset.
   - To exit without resetting the machine, press `No`. Go to step ❿.

NOTE

If you do not reboot your machine, the reset will not finish and your settings will remain unchanged.

10. Press .

NOTE

You can also reset the Network settings by pressing , `All Settings`, `Network`, `Network Reset`.

C Settings and features tables

Using the Settings Tables

Press the Touchscreen and Touchpanel buttons to choose the settings and options you want to set as they are displayed on the Touchscreen.

See the step-by-step Settings Tables and Features Tables for all the available choices for each setting and feature. You can use these tables to quickly set up your preferred settings in the machine.

Settings Tables

The Settings tables will help you understand the menu settings and options that are found in the machine's programs. The factory settings are shown in Bold with an asterisk.

(Settings)

Level 1	Level 2	Level 3	Options	Descriptions	See Page
(Date & Time)	Date	—	—	Add the date and time on the Touchscreen and in headings of faxes you send.	See ‡.
	Time	—	—		
	Clock Type	—	**12h Clock*** 24h Clock	Choose the time format from 12-hour or 24-hour.	
	Auto Daylight	—	On **Off***	Change for Daylight Saving Time automatically.	See ◆.
	Time Zone	—	UTCXXX:XX	Set the time zone for your country.	
(Toner)	See *Toner* on page 201.			Access the Toner menus.	201
Network	Wired LAN	See *Wired LAN* on page 168.		Access the Wired LAN setting menus.	168
	WLAN	See *WLAN* on page 170.		Access the WLAN setting menus.	170
Fax Preview	—	—	On **Off***	View faxes you receive on the Touchscreen.	49
Wi-Fi Direct	See *Wi-Fi Direct* on page 172.			Access the Wi-Fi Direct setting menus.	172
	◆ See Advanced User's Guide. ‡ See Quick Setup Guide.				
	The factory settings are shown in Bold with an asterisk.				

Level 1	Level 2	Level 3	Options	Descriptions	See Page
Tray Setting	**Paper Type**	**MP Tray**	Thin **Plain Paper*** Thick Thicker Recycled Paper Bond Paper Label Envelope Env. Thin Env. Thick Glossy Paper	Set the type of paper in the paper tray.	31
		Tray #1	Thin **Plain Paper*** Recycled Paper		
		Tray #2 (This menu only appears if you installed Tray 2.)	Thin **Plain Paper*** Recycled Paper		
	Paper Size	**MP Tray**	**Letter*** A4 B5(JIS) B5(ISO) A5 A5(Long Edge) A6 Executive Legal Folio 3"x5" Com-10 Monarch C5 DL	Set the size of paper in the paper tray.	31
	◆ See Advanced User's Guide. ‡ See Quick Setup Guide.				
	The factory settings are shown in Bold with an asterisk.				

C

Level 1	Level 2	Level 3	Options	Descriptions	See Page
Tray Setting (continued)	**Paper Size** (continued)	**Tray #1**	**Letter*** A4 B5(JIS) A5 A5(Long Edge) A6 Executive Legal Folio	Set the size of paper in the paper tray.	31
		Tray #2 (This menu only appears if you installed Tray 2.)	**Letter*** A4 B5(JIS) A5 Executive Legal Folio		31
	Check Size	—	**On*** Off	Choose whether to display the message to check that the size of the paper in the machine matches and the machine's Paper Size setting.	
	◆ See Advanced User's Guide. ‡ See Quick Setup Guide.				
	The factory settings are shown in Bold with an asterisk.				

Level 1	Level 2	Level 3	Options	Descriptions	See Page
Tray Setting (continued)	**Tray Use: Copy**	—	Tray#1 Only Tray#2 Only MP Only **MP>T1>T2*** MP>T2>T1 T1>T2>MP T2>T1>MP (Tray#2 Only and T2 appear only if you installed Tray 2.)	Chooses the tray that will be used for Copy, Fax or Print mode.	32
	Tray Use: Fax	—	Tray#1 Only Tray#2 Only MP Only MP>T1>T2 MP>T2>T1 **T1>T2>MP*** T2>T1>MP (Tray#2 Only and T2 appear only if you installed Tray 2.)		32
	Tray Use: Print	—	Tray#1 Only Tray#2 Only MP Only **MP>T1>T2*** MP>T2>T1 T1>T2>MP T2>T1>MP (Tray#2 Only and T2 appear only if you installed Tray 2.)		33
All Settings	See *All Settings* on page 158.			Select your default settings.	158
	◆ See Advanced User's Guide. ‡ See Quick Setup Guide.				
	The factory settings are shown in Bold with an asterisk.				

C

All Settings

Level 1	Level 2	Level 3	Level 4	Options	Descriptions	See Page
General Setup	**Tray Setting**	**Paper Type**	**MP Tray**	Thin **Plain Paper*** Thick Thicker Recycled Paper Bond Paper Label Envelope Env. Thin Env. Thick Glossy Paper	Set the type of paper in the paper tray.	31
			Tray #1	Thin **Plain Paper*** Recycled Paper		
			Tray #2	Thin **Plain Paper*** Recycled Paper		
	◆ See Advanced User's Guide.					
	The factory settings are shown in Bold with an asterisk.					

Level 1	Level 2	Level 3	Level 4	Options	Descriptions	See Page
General Setup (continued)	**Tray Setting** (continued)	**Paper Size**	**MP Tray**	**Letter*** A4 B5(JIS) B5(ISO) A5 A5(Long Edge) A6 Executive Legal Folio 3"x5" Com-10 Monarch C5 DL	Set the size of paper in the paper tray.	31
			Tray #1	**Letter*** A4 B5(JIS) A5 A5(Long Edge) A6 Executive Legal Folio		
			Tray #2	**Letter*** A4 B5(JIS) A5 Executive Legal Folio		
	◆ See Advanced User's Guide.					
	The factory settings are shown in Bold with an asterisk.					

C

Level 1	Level 2	Level 3	Level 4	Options	Descriptions	See Page
General Setup (continued)	**Tray Setting** (continued)	**Check Size**	—	**On*** Off	Choose whether to display the message to check that the size of the paper in the machine matches and the machine's Paper Size setting.	31
		Tray Use: Copy	—	Tray#1 Only Tray#2 Only MP Only **MP>T1>T2*** MP>T2>T1 T1>T2>MP T2>T1>MP (Tray#2 Only and T2 appear only if you installed Tray 2.)	Chooses the tray that will be used for Copy, Fax or Print mode.	32
		Tray Use: Fax	—	Tray#1 Only Tray#2 Only MP Only MP>T1>T2 MP>T2>T1 **T1>T2>MP*** T2>T1>MP (Tray#2 Only and T2 appear only if you installed Tray 2.)		32
		Tray Use: Print	—	Tray#1 Only Tray#2 Only MP Only **MP>T1>T2*** MP>T2>T1 T1>T2>MP T2>T1>MP (Tray#2 Only and T2 appear only if you installed Tray 2.)		33
	◆ See Advanced User's Guide.					
	The factory settings are shown in Bold with an asterisk.					

Level 1	Level 2	Level 3	Level 4	Options	Descriptions	See Page
General Setup (continued)	**Volume**	**Ring**	—	Off Low **Med*** High	Adjust the ring volume.	See ◆.
		Beep	—	Off **Low*** Med High	Adjust the beeper volume.	
		Speaker	—	Off Low **Med*** High	Adjust the speaker volume.	
	LCD Settings	**Backlight**	—	**Light*** Med Dark	Adjust the brightness of the Touchscreen backlight.	
		Dim Timer	—	**Off*** 10Secs 20Secs 30Secs	Set how long the Touchscreen backlight stays on after the last button press.	
	Button Settings	**Home Button Settings**	—	**Home*** More1 More2	Set the screen that is displayed when you press Home ( ) on the Touchpanel.	14
	Ecology	**Toner Save**	—	On **Off***	Increase the page yield of the toner cartridge. If your machine has been set to Toner Save On, you cannot set Quiet Mode to On.	See ◆.
		Sleep Time	—	Range varies depending on the model. **3 Mins***	Conserve power.	
	◆ See Advanced User's Guide.					
	The factory settings are shown in Bold with an asterisk.					

C

Level 1	Level 2	Level 3	Level 4	Options	Descriptions	See Page
General Setup (continued)	**Ecology** (continued)	**Quiet Mode**	—	On **Off***	Decreases printing noise. If your machine has been set to Quiet Mode On, you cannot set Toner Save to On.	See ◆.
	Setting Lock	**Set Password**	—	Verify:	Stop unauthorized users from changing the machine's settings.	
		Lock Off⇒On	—	—		
Shortcut Settings	(Choose shortcut button.)	**Edit Shortcut Name**	—	—	Change the shortcut name.	20
		Delete	—	—	Delete the shortcut.	21
	◆ See Advanced User's Guide.					
	The factory settings are shown in Bold with an asterisk.					

Level 1	Level 2	Level 3	Level 4	Options	Descriptions	See Page
Fax	**Setup Receive**	**Receive Mode**	—	**Fax*** Fax/Tel External TAD Manual	Choose the receive mode that best suits your needs.	44
		Ring Delay	—	0 1 2 3 **4***	Set the number of rings before the machine answers in Fax or Fax/Tel mode.	47
		F/T Ring Time	—	**20Secs*** 30Secs 40Secs 70Secs	Set the length of the pseudo/double-ring time in Fax/Tel mode.	47
		Fax Preview	—	On **Off***	View faxes you receive on the Touchscreen.	49
		Easy Receive	—	**On*** Off	Receive fax messages automatically when you answer a call and hear fax tones.	48
		Remote Codes	—	**Remote Codes** (Options) **On*** Off Fax Receive Code (*51) Tel Answer (#51)	Answer calls at an extension telephone and use codes to turn the machine on or off. You can personalize the codes.	61
		Auto Reduction	—	**On*** Off	Reduces the size of incoming faxes.	See ◆.
		PC Fax Receive	—	On **Off***	Set the machine to send faxes to your computer. If you chose On, you can turn on the Backup Print safety feature.	52
			(Backup Print)	On **Off***		
	◆ See Advanced User's Guide.					
	The factory settings are shown in Bold with an asterisk.					

C

Level 1	Level 2	Level 3	Level 4	Options	Descriptions	See Page
Fax (continued)	**Setup Receive** (continued)	**Memory Receive**	—	**Off*** Fax Forward Paging Fax Storage	Set the machine to forward fax messages, to call your pager or cell phone, or to store incoming faxes in the memory (so you can retrieve them while you are away from your machine).	See ◆.
			(Backup Print)	On **Off***	If you chose Fax Forward, you can turn on the Backup Print safety feature.	
		Fax Rx Stamp	—	**On*** Off	Print the received time and date on the top of the received faxes.	
		2-sided	—	On **Off***	Print received faxes on both sides of the paper.	
	Setup Send	**Batch TX**	—	On **Off***	Combine delayed faxes going to the same fax number at the same time of day into one transmission.	
		Coverpage Setting	**Print Sample**	—	Print a sample of the fax cover page. You can fill in information and fax it with your document.	
			Coverpage Message	—	Set up your own comments for the fax cover page.	
		Auto Redial	—	**On*** Off	Set the machine to redial automatically one time after five minutes.	62
		Destination	—	**Display*** Hidden	Set the machine to display the destination information on the Touchscreen during fax sending.	See ◆.
◆ See Advanced User's Guide.						
The factory settings are shown in Bold with an asterisk.						

Level 1	Level 2	Level 3	Level 4	Options	Descriptions	See Page
Fax (continued)	**Report Setting**	**Transmission**	—	On On+Image **Off*** Off+Image No Report	Choose the initial setup for the Transmission Verification Report.	43
		Journal Period	**Journal Period**	Off **Every 50 Faxes*** Every 6 Hours Every 12 Hours Every 24 Hours Every 2 Days Every 7 Days	Set the interval for automatic printing of the Fax Journal. If you select other than Off or Every 50 Faxes, you can set the time for the option. If you select Every 7 Days, you can also set the day of the week.	See ◆.
			Time	—		
			Day	**Every Monday*** Every Tuesday Every Wednesday Every Thursday Every Friday Every Saturday Every Sunday		
	Print Fax	—	—	—	Print incoming faxes that are stored in the memory.	
	Remote Access	—	—	---*	Set your own code for Remote Retrieval.	
	Dial Restriction	**Dial Pad**	—	Enter # Twice On **Off***	Set the machine to restrict dialing when using the dial pad.	
		Address Book	—	Enter # Twice On **Off***	Set the machine to restrict the dialing when using the Address Book.	
	◆ See Advanced User's Guide.					
	The factory settings are shown in Bold with an asterisk.					

C

Level 1	Level 2	Level 3	Level 4	Options	Descriptions	See Page
Fax (continued)	**Dial Restriction** (continued)	**Shortcuts**	—	Enter # Twice On **Off***	Set the machine to restrict the dialing when using a Shortcut.	See ◆.
		LDAP Server	—	Enter # Twice On **Off***	Set the machine to restrict the dialing of LDAP server numbers.	
	Remaining Jobs	—	—	—	Check which scheduled jobs are in the memory and cancel selected jobs.	
	Miscellaneous	**Distinctive**	**Distinctive**	On **Off***	Turn on the telephone company's Distinctive Ring subscriber service, and then register your new ring pattern on the machine.	55
			Ring Pattern	**1*** 2 3 4		
◆ See Advanced User's Guide.						
The factory settings are shown in Bold with an asterisk.						

Level 1	Level 2	Level 3	Level 4	Options	Descriptions	See Page
Printer	Emulation	—	—	**Auto*** HP LaserJet BR-Script 3	Choose the emulation mode.	See +.
	Print Options	Internal Font	—	HP LaserJet BR-Script 3	Print a list of the machine's internal fonts.	
		Test Print	—	—	Print a test page.	
	2-sided	—	—	**Off*** Long Edge Short Edge	Enable or disable 2-sided printing and choose long edge or short edge.	
	Auto Continue	—	—	**On*** Off	Select this setting if you want the machine to clear paper size errors and to use the paper in the tray.	
	Output Color	—	—	**Auto*** Color Black and White	Choose color or black & white for printed documents. If you choose Auto, the machine selects an appropriate option for the document (color or black & white).	
	Reset Printer	—	—	Yes No	Restore the printer settings to the factory settings.	
	Color Correction	Calibration	Calibrate	Yes No	Adjusts the color density.	See ◆.
			Reset	Yes No	Returns the color calibration to the factory settings.	
		Registration	—	Yes No	Adjusts the print position of each color.	
		Auto Correction	—	**On*** Off	Chooses whether to carry out the color calibration and registration.	

+ See Software and Network User's Guide.

◆ See Advanced User's Guide.

The factory settings are shown in Bold with an asterisk.

C

Level 1	Level 2	Level 3	Level 4	Level 5	Options	Descriptions
Network +	**Wired LAN**	**TCP/IP**	**BOOT Method**	—	**Auto*** Static RARP BOOTP DHCP	Choose the BOOT method that best suits your needs.
			(IP Boot Tries)		**3*** [00000-32767]	Specifies the number of attempts the machine will try to obtain an IP address when the BOOT Method is set to any setting except Static.
			IP Address	—	[000-255]. [000-255]. [000-255]. [000-255]	Enter the IP address.
			Subnet Mask	—	[000-255]. [000-255]. [000-255]. [000-255]	Enter the Subnet mask.
			Gateway	—	[000-255]. [000-255]. [000-255]. [000-255]	Enter the Gateway address.
			Node Name	—	BRNXXXXXXXXXXXX	Enter the Node name (up to 32 characters).
			WINS Configuration	—	**Auto*** Static	Chooses the WINS configuration mode.
			WINS Server	**Primary**	[000-255]. [000-255]. [000-255]. [000-255]	Specify the IP address of the primary or secondary WINS server.
				Secondary	[000-255]. [000-255]. [000-255]. [000-255]	

+ See Software and Network User's Guide.

● Visit the Brother Solutions Center to download the Web Connect Guide at http://solutions.brother.com/.

The factory settings are shown in Bold with an asterisk.

Level 1	Level 2	Level 3	Level 4	Level 5	Options	Descriptions
Network + (continued)	**Wired LAN** (continued)	**TCP/IP** (continued)	**DNS Server**	**Primary**	[000-255]. [000-255]. [000-255]. [000-255]	Specify the IP address of the primary or secondary DNS server.
				Secondary	[000-255]. [000-255]. [000-255]. [000-255]	
			APIPA	—	**On*** Off	Automatically allocates the IP address from the link-local address range.
			IPv6	—	On **Off***	Enable or disable the IPv6 protocol. If you want to use the IPv6 protocol, visit http://solutions.brother.com/ for more information.
		Ethernet	—	—	**Auto*** 100B-FD 100B-HD 10B-FD 10B-HD	Choose the Ethernet link mode.
		Wired Status	—	—	Active 100B-FD Active 100B-HD Active 10B-FD Active 10B-HD Inactive Wired OFF	You can see the current wired status.
		MAC Address	—	—	—	View the MAC address of the machine.
		Set to Default	—	—	Yes No	Restore the wired network setting to the factory setting.
		Wired Enable	—	—	**On*** Off	Enable or disable the Wired LAN manually.

+ See Software and Network User's Guide.

● Visit the Brother Solutions Center to download the Web Connect Guide at http://solutions.brother.com/.

The factory settings are shown in Bold with an asterisk.

C

Level 1	Level 2	Level 3	Level 4	Level 5	Options	Descriptions
Network + (continued)	**WLAN**	**TCP/IP**	**BOOT Method**	—	**Auto*** Static RARP BOOTP DHCP	Choose the BOOT method that best suits your needs.
			(IP Boot Tries)	—	**3*** [00000-32767]	Specifies the number of attempts the machine will try to obtain an IP address when the BOOT Method is set to any setting except Static.
			IP Address	—	[000-255]. [000-255]. [000-255]. [000-255]	Enter the IP address.
			Subnet Mask	—	[000-255]. [000-255]. [000-255]. [000-255]	Enter the Subnet mask.
			Gateway	—	[000-255]. [000-255]. [000-255]. [000-255]	Enter the Gateway address.
			Node Name	—	BRWXXXXXXXXXXXX	Enter the Node name (up to 32 characters).
			WINS Configuration	—	**Auto*** Static	Chooses the WINS configuration mode.
			WINS Server	**Primary**	[000-255]. [000-255]. [000-255]. [000-255]	Specify the IP address of the primary or secondary WINS server.
				Secondary	[000-255]. [000-255]. [000-255]. [000-255]	

+ See Software and Network User's Guide.

● Visit the Brother Solutions Center to download the Web Connect Guide at http://solutions.brother.com/.

The factory settings are shown in Bold with an asterisk.

Level 1	Level 2	Level 3	Level 4	Level 5	Options	Descriptions
Network + (continued)	**WLAN** (continued)	**TCP/IP** (continued)	**DNS Server**	**Primary**	[000-255]. [000-255]. [000-255]. [000-255]	Specify the IP address of the primary or secondary DNS server.
				Secondary	[000-255]. [000-255]. [000-255]. [000-255]	
			APIPA	—	**On*** Off	Automatically allocates the IP address from the link-local address range.
			IPv6	—	On **Off***	Enable or disable the IPv6 protocol. If you want to use the IPv6 protocol, visit http://solutions.brother.com/ for more information.
		WLAN Assistant	—	—	—	(Windows® only) You can configure your wireless network settings using the Brother CD-ROM.
		Setup Wizard	—	—	—	You can configure your internal print server.
		WPS/AOSS	—	—	—	You can easily configure your wireless network settings using the one-button push method.
		WPS w/ PIN Code	—	—	—	You can easily configure your wireless network settings using WPS with a PIN code.

+ See Software and Network User's Guide.

● Visit the Brother Solutions Center to download the Web Connect Guide at http://solutions.brother.com/.

The factory settings are shown in Bold with an asterisk.

C

Level 1	Level 2	Level 3	Level 4	Level 5	Options	Descriptions
Network + (continued)	**WLAN** (continued)	**WLAN Status**	**Status**	—	Active(11b) Active(11g) Active(11n) Wired LAN Active WLAN Off AOSS Active Connection Failed	You can see the current wireless network status.
			Signal	—	Strong Medium Weak None	You can see the current wireless network signal strength.
			SSID	—	—	You can see the current SSID.
			Comm. Mode	—	Ad-hoc Infrastructure None	You can see the current Communication Mode.
		MAC Address	—	—	—	View the MAC address of the machine.
		Set to Default	—	—	Yes No	Restore the wireless network settings to factory setting.
		WLAN Enable	—	—	On **Off***	Enable or disable the wireless LAN manually.
	Wi-Fi Direct	**Push Button**	—	—	—	You can easily configure your Wi-Fi Direct network settings using the one-button push method.
		PIN Code	—	—	—	You can easily configure your Wi-Fi Direct network settings using WPS with a PIN code.

+ See Software and Network User's Guide.

● Visit the Brother Solutions Center to download the Web Connect Guide at http://solutions.brother.com/.

The factory settings are shown in Bold with an asterisk.

Level 1	Level 2	Level 3	Level 4	Level 5	Options	Descriptions
Network + (continued)	**Wi-Fi Direct** (continued)	**Manual**	—	—	—	You can manually configure your Wi-Fi Direct network settings.
		Group Owner	—	—	On Off	Sets your machine as the Group Owner.
		Device Information	**Device Name**	—	—	You can see the device name of your machine.
			SSID	—	(My SSID) (Connected to other party's SSID) Not Connected	View the SSID of the Group Owner. When the machine is not connected, the Touchscreen displays Not Connected.
			IP Address	—	—	You can see the current IP Address of your machine.
		Status Information	**Status**	—	G/O Active(**) Client Active Not Connected Off Wired LAN Active ** = the number of devices	You can see the current Wi-Fi Direct network status.
			Signal	—	Strong Medium Weak None	You can see the current Wi-Fi Direct network signal strength. When your machine acts as the Group Owner, the Touchscreen always displays Strong.
		I/F Enable	—	—	On **Off***	Enable or disable the Wi-Fi Direct connection.

+ See Software and Network User's Guide.

● Visit the Brother Solutions Center to download the Web Connect Guide at http://solutions.brother.com/.

The factory settings are shown in Bold with an asterisk.

C

Level 1	Level 2	Level 3	Level 4	Level 5	Options	Descriptions
Network + (continued)	**NFC**	—	—	—	**On*** Off	You can use card authentication by touching the IC card to the NFC Reader on the control panel.
	E-mail/IFAX (MFC-L8600CDW is supported only after IFAX is downloaded)	**Mail Address**	—	—	—	Enter the mail address (up to 60 characters).
		Setup Server	**SMTP**	**Server**	[000-255]. [000-255]. [000-255]. [000-255] Name	Enter the SMTP server address, or name (up to 64 characters).
				Port	**25*** [1-65535]	Enter the SMTP port number.
				Auth. for SMTP	**None*** SMTP-AUTH	Select the Security method for E-mail notification.
				SSL/TLS	**None*** SSL TLS	Send or receive an E-mail via an E-mail server that requires secure SSL/TLS communication.
				Verify Cert.	On **Off***	Verify the SMTP Server Certificate automatically.
			POP3/IMAP4	**Protocol**	**POP3*** IMAP4	Choose POP3 or IMAP4 for receiving E-mails.
				Server	[000-255]. [000-255]. [000-255]. [000-255] Name	Enter POP3 or IMAP4 server address, or name (up to 64 characters).
				Port	**110*** [1-65535]	Enter POP3 or IMAP4 port number.
				Mailbox Name	—	Enter the mail box name (up to 60 characters).

+ See Software and Network User's Guide.

● Visit the Brother Solutions Center to download the Web Connect Guide at http://solutions.brother.com/.

The factory settings are shown in Bold with an asterisk.

Level 1	Level 2	Level 3	Level 4	Level 5	Options	Descriptions
Network + (continued)	**E-mail/IFAX** (MFC-L8600CDW is supported only after IFAX is downloaded) (continued)	**Setup Server** (continued)	**POP3/IMAP4** (continued)	**Mailbox Password**	—	Enter the password to log in to the POP3 or IMAP4 server (up to 32 characters).
				Select Folder	**Default(Inbox)*** Specified	Choose the mail folder. If you choose Specified, enter the folder name (up to 60 characters).
				SSL/TLS	**None*** SSL TLS	You can send or receive an E-mail via an E-mail server that requires secure SSL/TLS communication.
				Verify Cert.	On **Off***	Verify the POP3 or IMAP4 Server Certificate automatically.
				APOP	On **Off***	Enable or disable APOP.
		Setup Mail RX	**Auto Polling**	**Auto Polling**	**On*** Off	Automatically checks the server for new messages.
				Poll Frequency (When Auto Polling is set to On.)	1Min 3Mins 5Mins **10Mins*** 30Mins 60Mins	Set the interval for checking for new messages on the server.
			Header	—	All Subject+From +To **None***	Select the contents of the mail header to be printed.
			Del/Read Error Mail	—	**On*** Off	The POP3 server deletes error mails automatically. The IMAP4 server deletes error mails automatically after you read them.

+ See Software and Network User's Guide.

● Visit the Brother Solutions Center to download the Web Connect Guide at http://solutions.brother.com/.

The factory settings are shown in Bold with an asterisk.

C

Level 1	Level 2	Level 3	Level 4	Level 5	Options	Descriptions
Network + (continued)	**E-mail/IFAX** (MFC-L8600CDW is supported only after IFAX is downloaded) (continued)	**Setup Mail RX** (continued)	**Notification**	—	On MDN **Off***	Receive notification messages.
		Setup Mail TX	**Sender Subject**	—	**Internet Fax Job***	Displays the subject that is attached to the Internet Fax data.
			Size Limit	—	On **Off***	Limits the size of E-mail documents.
			Notification	—	On **Off***	Sends notification messages.
		Setup Relay	**Relay Broadcast**	—	On **Off***	Relays a document to another fax machine.
			Relay Domain	—	—	Registers the Domain name.
			Relay Report	—	On **Off***	Prints the Relay Broadcast Report.
		Manual Receive	—	—	—	Manually check the POP3 or IMAP4 server for new messages.
	Web Connect Settings ●	**Proxy Settings**	**Proxy Connection**	—	On **Off***	You can change the Web connection settings.
			Address	—	—	
			Port	—	**8080***	
			User Name	—	—	
			Password	—	—	
	Fax to Server (MFC-L8600CDW is supported only after IFAX is downloaded)	**Fax to Server**	—	—	On **Off***	You can store a prefix/suffix address in the machine and can send a document from a fax server system.
		Prefix	—	—	—	
		Suffix	—	—	—	
	Security	**IPsec**	—	—	On **Off***	Enable or disable Ipsec.
	Network Reset	—	—	—	Yes No	Restore all network settings to the factory settings.

+ See Software and Network User's Guide.

● Visit the Brother Solutions Center to download the Web Connect Guide at http://solutions.brother.com/.

The factory settings are shown in Bold with an asterisk.

Level 1	Level 2	Level 3	Options	Descriptions	See Page
Print Reports	Transmission	View on LCD	—	View or print the Transmission Verification Report for your last 200 outgoing faxes and print the last report.	See ◆.
		Print Report	—		
	Address Book	—	—	Lists names and numbers stored in the Address Book.	
	Fax Journal	—	—	Lists information about your last 200 incoming and outgoing faxes. (TX means Transmit. RX means Receive.)	
	User Settings	—	—	Lists your settings.	
	Printer Settings	—	—	Lists your Printer settings.	
	Network Configuration	—	—	Lists your Network settings.	
	Drum Dot Print	—	—	Prints the Drum Dot Check Sheet.	
	WLAN Report	—	—	Prints the result of wireless LAN connectivity diagnosis.	See +.
	◆ See Advanced User's Guide. + See Software and Network User's Guide.				
	The factory settings are shown in Bold with an asterisk.				

C

Level 1	Level 2	Level 3	Options	Descriptions	See Page
Machine Info.	Serial No.	—	—	Check the serial number of your machine.	151
	Firmware Version	Main Version	—	Check the firmware version of your machine.	151
		Sub1 Version	—		
		Sub2 Version	—		
		Sub4 Version	—		
	Page Counter	Total	Color Black and White	Check the number of total color or black & white pages the machine has printed during its life.	See ◆.
		Fax/List	Color Black and White		
		Copy	Color Black and White		
		Print	Color Black and White		
	Parts Life	Drum	—	Check the percentage of a machine part's life that remains available.	
		Belt Unit	—		
		Fuser	—		
		Laser Unit	—		
		PF Kit MP	—		
		PF Kit 1	—		
		PF Kit 2	—		
	Reset Menu (Appears only when the drum unit or belt unit has exceeded its rated life.)	Drum	—	Reset the drum unit life. Appears when you replace the drum unit.	96
		Belt Unit	—	Reset the belt unit life. Appears when you replace the belt unit.	101
	◆ See Advanced User's Guide.				
	The factory settings are shown in Bold with an asterisk.				

Level 1	Level 2	Level 3	Options	Descriptions	See Page
Initial Setup	Date & Time	Date	—	Add the date and time on the Touchscreen and in the headings of faxes you send.	See ‡.
		Time	—		
		Clock Type	**12h Clock*** 24h Clock	Chooses the time format from 12-hour or 24-hour.	
		Auto Daylight	On **Off***	Changes for Daylight Saving Time automatically.	See ◆.
		Time Zone	UTCXXX:XX	Sets the time zone for your country.	
	Station ID	Fax	—	Set up your name and fax number to appear on each page you fax.	21
		Tel	—		
		Name	—		
	Tone/Pulse (in Canada)	—	**Tone*** Pulse	Choose the dialing mode.	See ◆.
	Dial Tone	—	Detection **No Detection***	You can shorten the dial tone detect pause.	142
	Dial Prefix	—	On **Off***	Sets a prefix number that will always be added before the fax number every time you dial.	See ◆.
	Compatibility	—	**High*** Normal Basic(for VoIP)	Adjust the equalization for transmission difficulties. VoIP service providers offer fax support using various standards. If you regularly experience fax transmission errors, choose Basic(for VoIP).	142
	Reset	Machine Reset	Yes No	Restores the machine settings to the factory settings except for network settings, station ID and Address Book.	151
		Network	Yes No	Restores all network settings to the factory settings.	
		Address Book & Fax	Yes No	Erase all stored phone numbers and fax settings.	
		All Settings	Yes No	Restores all the machine's settings quickly to the factory defaults.	

◆ See Advanced User's Guide.

‡ See Quick Setup Guide.

The factory settings are shown in Bold with an asterisk.

C

Level 1	Level 2	Level 3	Options	Descriptions	See Page
Initial Setup (continued)	**Reset** (continued)	**Factory Reset**	Yes No	Restores *all* the machine's settings to the factory defaults. Perform this operation when you dispose of your machine.	151
	Local Language	—	(in USA) **English*** Español (in Canada) **English*** Français	Change the Touchscreen language for your country.	See ‡.
	◆ See Advanced User's Guide. ‡ See Quick Setup Guide.				
	The factory settings are shown in Bold with an asterisk.				

Features Tables

Fax (When Fax Preview is Off)

Level 1	Level 2	Level 3	Options	Descriptions	See Page
Redial/Pause	—	—	—	Redial the last number called. When you are entering a fax or telephone number on the Touchpanel, Redial changes to Pause on the Touchscreen. Press Pause when you need a delay while dialing numbers, such as access codes and credit card numbers. You can also store a pause when you set up addresses.	—
Hook	—	—	—	Press before dialing when you want to listen to make sure a fax machine has answered, and then press Fax Start.	—
Address Book	(**Search:**)	—	—	Search within the Address Book.	62
	Edit	—	Add New Address	Store Address Book numbers, so you can dial by pressing Address Book on the Touchscreen (and Fax Start).	63
		—	Setup Groups	Set up Group numbers for Broadcasting.	See ◆.
			Change	Change Address Book numbers.	64 and see ◆.
			Delete	Delete Address Book numbers.	
	—	**Apply**	—	Start sending a fax using the address book.	62 and see ◆.
◆ See Advanced User's Guide.					
The factory settings are shown in Bold with an asterisk.					

C

Level 1	Level 2	Level 3	Options	Descriptions	See Page
Call History	Outgoing Call	Edit	Add to Address Book Delete	Choose a number from the Outgoing Call history and then send a fax to it, add it to Address Book, or delete it.	See ◆.
		Apply	—		
Fax Start	—	—	—	Send a fax.	—
Options	Fax Resolution	—	**Standard*** Fine S.Fine Photo	Set the resolution for outgoing faxes.	See ◆.
	2-sided Fax (MFC-L8850CDW and MFC-L9550CDW)	—	**Off*** 2-sided Scan: Long Edge 2-sided Scan: Short Edge	Set the 2-sided scanning format.	
	Contrast	—	**Auto*** Light Dark	Change the lightness or darkness of faxes you send.	
	Broadcasting	Add Number	Add Number Add from Address book Search in Address book	Send the same fax message to more than one fax number.	
	Delayed Fax	Delayed Fax	On **Off***	Set the time of day that delayed faxes will be sent.	
		Set Time	—		
	Real Time TX	—	On **Off***	Send a fax without using the memory.	
	Coverpage Setup	Coverpage Setup	On **Off***	Automatically send a cover page you programmed.	
		Coverpage Message	1.Comment Off 2.Please Call 3.Urgent 4.Confidential 5. 6.		
		Total Pages	—		
	◆ See Advanced User's Guide.				
	The factory settings are shown in Bold with an asterisk.				

Level 1	Level 2	Level 3	Options	Descriptions	See Page
Options (continued)	**Overseas Mode**	—	On **Off***	If you are having difficulty sending faxes overseas, set this to On.	See ◆.
	Glass Scan Size	—	**Letter*** A4 Legal/Folio (MFC-L8850CDW and MFC-L9550CDW)	To fax an A4, Legal or Folio size document, you must change the Glass Scan Size setting.	42
	Set New Default	—	Fax Resolution Contrast Glass Scan Size Real Time TX Coverpage Setup Overseas Mode (Options) Yes No	Save your fax settings as the default settings.	See ◆.
	Factory Reset	—	Yes No	Restore all the fax settings you changed back to the factory settings.	
Save as Shortcut	—	—	Address Fax Resolution 2-sided Fax (MFC-L8850CDW and MFC-L9550CDW) Contrast Broadcasting Real Time TX Coverpage Setup Overseas Mode Glass Scan Size	Register the current settings as a shortcut.	
	◆ See Advanced User's Guide.				
	The factory settings are shown in Bold with an asterisk.				

C

Fax (When Fax Preview is On)

Level 1	Level 2	Level 3	Options	Descriptions	See Page
Sending Fax(es)	See *Fax (When Fax Preview is Off)* on page 181.				
Received Faxes	Print/Delete	Print All:New Fax(es)	—	Print the new received faxes.	50
		Print All(Old Faxes)	—	Print the old received faxes.	
		Delete All:New Fax(es)	—	Delete the new received faxes.	
		Delete All(Old Faxes)	—	Delete the old received faxes.	
Address Book	See *Fax (When Fax Preview is Off)* on page 181.				
Call History	See *Fax (When Fax Preview is Off)* on page 181.				
	◆ See Advanced User's Guide.				
	The factory settings are shown in Bold with an asterisk.				

Copy

Level 1	Level 2	Level 3	Options	Descriptions	See Page
Black Start	—	—	—	Make a black & white or gray scale copy.	—
Color Start	—	—	—	Make a color copy.	
Receipt **Normal** **2in1(ID)** **2in1** **2-sided(1⇒2)** **2-sided(2⇒2)** (MFC-L8850CDW and MFC-L9550CDW) **Paper Save**	—	—	—	Choose the desired settings from the preset items.	65
Options	**Quality**	—	**Auto*** Text Photo Receipt (When you select 2in1(ID) in Page Layout) **Auto*** Lighter	Choose the Copy resolution for your type of document.	See ◆.
	Enlarge/Reduce	**100%***	—	—	
		Enlarge	200% 141% A5⇒A4 104% EXE⇒LTR	Choose an enlargement ratio for the next copy.	
	◆ See .Advanced User's Guide				
	The factory settings are shown in Bold with an asterisk.				

C

Level 1	Level 2	Level 3	Options	Descriptions	See Page
Options (continued)	**Enlarge/Reduce** (continued)	**Reduce**	97% LTR⇒A4 94% A4⇒LTR 91% Full Page 85% LTR⇒EXE 83% LGL⇒A4 78% LGL⇒LTR 70% A4⇒A5 50%	Choose a reduction ratio for the next copy.	See ◆.
		Custom(25-400%)	—	Enter an enlargement or reduction ratio.	
	Density	—	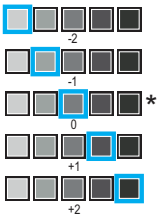	Adjust the Density for copies. When you choose 2in1(ID) from the preset items, the default setting is +1.	
	Contrast	—	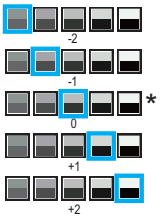	Adjust the contrast for copies.	
	Stack/Sort	—	**Stack*** Sort	Choose to stack or sort multiple copies.	
	Page Layout	—	**Off(1in1)*** 2in1(P) 2in1(L) 2in1(ID) 4in1(P) 4in1(L)	Make N in 1 and 2 in 1 ID copies.	
	◆ See .Advanced User's Guide				
	The factory settings are shown in Bold with an asterisk.				

Level 1	Level 2	Level 3	Options	Descriptions	See Page
Options (continued)	**Color Adjust**	**Red**	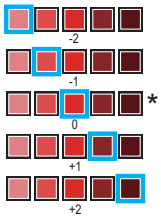	Adjust the red color for copies.	See ◆.
		Green	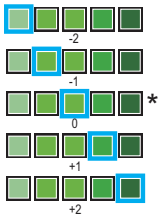	Adjust the green color for copies.	
		Blue	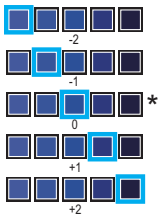	Adjust the blue color for copies.	
	2-sided Copy (MFC-L8600CDW)	—	**Off*** 1-sided⇒2-sided Long Edge Flip 1-sided⇒2-sided Short Edge Flip	Enable or disable 2-sided copying and choose long edge or short edge.	
	2-sided Copy (MFC-L8850CDW and MFC-L9550CDW)	—	**Off*** 2-sided⇒2-sided 1-sided⇒2-sided Long Edge Flip 2-sided⇒1-sided Long Edge Flip 1-sided⇒2-sided Short Edge Flip 2-sided⇒1-sided Short Edge Flip		
◆ See .Advanced User's Guide					
The factory settings are shown in Bold with an asterisk.					

C

Level 1	Level 2	Level 3	Options	Descriptions	See Page
Options (continued)	**2-sided Copy Page Layout** (MFC-L8850CDW and MFC-L9550CDW)	—	**LongEdge⇒ LongEdge*** LongEdge⇒ ShortEdge ShortEdge⇒ LongEdge ShortEdge⇒ ShortEdge	Choose a page layout option when you make 2-sided N in 1 copies from a 2-sided document.	See ◆.
	Tray Use	—	Tray#1 Only Tray#2 Only MP Only **MP>T1>T2*** MP>T2>T1 T1>T2>MP T2>T1>MP (Tray#2 Only and T2 appear only if you installed Tray 2.)	Sets the machine to choose the tray that will be used for Copy mode.	
	Remove Background Color	—	**Off*** Low Medium High	Change the amount of background color that is removed.	
	◆ See .Advanced User's Guide				
	The factory settings are shown in Bold with an asterisk.				

Level 1	Level 2	Level 3	Options	Descriptions	See Page
Options (continued)	**Save as Shortcut**	—	Quality Enlarge/Reduce Density Contrast Stack/Sort Page Layout Red Green Blue 2-sided Copy 2-sided Copy Page Layout (MFC-L8850CDW and MFC-L9550CDW) Tray Use Remove Background Color	Add the current settings as a shortcut.	See ◆.
	◆ See .Advanced User's Guide				
	The factory settings are shown in Bold with an asterisk.				

C

Scan

Level 1	Level 2	Level 3	Options	Descriptions	See Page
to OCR	(PC Select)	**Options**	See *Options (to OCR)* on page 192.		See +.
		Save as Shortcut	(PC Select)	Add the current settings as a shortcut.	
		Start	—	Start scanning.	
to File	(PC Select)	**Options**	See *Options (to File, to Image and to E-mail)* on page 193.		
		Save as Shortcut	(PC Select)	Add the current settings as a shortcut.	
		Start	—	Start scanning.	
to Image	(PC Select)	**Options**	See *Options (to File, to Image and to E-mail)* on page 193.		
		Save as Shortcut	(PC Select)	Add the current settings as a shortcut.	
		Start	—	Start scanning.	
to USB	**Options**	See *Options (to USB)* on page 194.			
	Save as Shortcut	—	2-sided Scan (MFC-L8850CDW and MFC-L9550CDW) Scan Type Resolution File Type Glass Scan Size File Name File Size Remove Background Color	Add the current settings as a shortcut.	
	Start	—	—	Start scanning.	
to E-mail	(PC Select)	**Options**	See *Options (to File, to Image and to E-mail)* on page 193.		
		Save as Shortcut	(PC Select)	Add the current settings as a shortcut.	
		Start	—	Start scanning.	
+ See Software and Network User's Guide.					
The factory settings are shown in Bold with an asterisk.					

Level 1	Level 2	Level 3	Options	Descriptions	See Page
to E-mail Server (MFC-L8600CDW is supported only after IFAX is downloaded)	**Address Book**	—	—	Choose the address of the recipient from the address book.	See +.
	Manual	—	—	Manually enter the address of the recipient.	
	OK	**Options**	See *Options (to E-mail Server)* on page 197.		
		Save as Shortcut	Address 2-sided Scan (MFC-L8850CDW and MFC-L9550CDW) Scan Type Resolution File Type Glass Scan Size File Size	Add the current settings as a shortcut.	
		Start	—	Start scanning.	
to FTP/SFTP	(Profile name)	**Options**	See *Options (to FTP/SFTP and to Network)* on page 199.		
		Save as Shortcut	(Profile name)	Add the current settings as a shortcut.	
		Start	—	Start scanning.	
to Network	(Profile name)	**Options**	See *Options (to FTP/SFTP and to Network)* on page 199.		
		Save as Shortcut	(Profile name)	Add the current settings as a shortcut.	
		Start	—	Start scanning.	
WS Scan (Appears if you have installed the scanner driver for your network-connected machine via Web Services.)	**Scan**	—	—	Scan data using Web Service protocol.	
	Scan for E-mail	—	—		
	Scan for Fax	—	—		
	Scan for Print	—	—		
	+ See Software and Network User's Guide.				
	The factory settings are shown in Bold with an asterisk.				

C

Options (to OCR)

Level 1	Level 2	Options	Descriptions	See Page
Options	**2-sided Scan** (MFC-L8850CDW and MFC-L9550CDW)	**Off*** 2-sided Scan: Long Edge 2-sided Scan: Short Edge	Choose the 2-sided scan mode.	See +.
	Scan Settings	Set at Device **Set from Computer***	To change settings using the Touchscreen, choose Set at Device.	
	Scan Type (Appears when Scan Settings is set to Set at Device.)	Color Gray **Black and White***	Choose the scan type for your document.	
	Resolution (Appears when Scan Settings is set to Set at Device.)	100 dpi **200 dpi*** 300 dpi 600 dpi	Choose the scan resolution for your document.	
	File Type (Appears when Scan Settings is set to Set at Device.)	**Text*** HTML RTF	Choose the file format for your document	
	Scan Size (Appears when Scan Settings is set to Set at Device.)	A4 **Letter*** Legal	Choose the scan size for your document.	
	+ See Software and Network User's Guide.			
	The factory settings are shown in Bold with an asterisk.			

Options (to File, to Image and to E-mail)

Level 1	Level 2	Options	Descriptions	See Page
Options	**2-sided Scan** (MFC-L8850CDW and MFC-L9550CDW)	**Off*** 2-sided Scan: Long Edge 2-sided Scan: Short Edge	Choose the 2-sided scan mode.	See +.
	Scan Settings	Set at Device **Set from Computer***	To change settings using the Touchscreen, choose Set at Device.	
	Scan Type (Appears when Scan Settings is set to Set at Device.)	**Color*** Gray Black and White	Choose the scan type for your document.	
	Resolution (Appears when Scan Settings is set to Set at Device.)	100 dpi **200 dpi*** 300 dpi 600 dpi	Choose the scan resolution for your document.	
	File Type (Appears when Scan Settings is set to Set at Device.)	(When you select Color or Gray in Scan Type) **PDF*** JPEG (When you select Black and White in Scan Type) **PDF*** TIFF	Choose the file format for your document.	
	Scan Size (Appears when Scan Settings is set to Set at Device.)	A4 **Letter*** Legal	Choose the scan size for your document.	
	Remove Background Color (Appears when Scan Settings is set to Set at Device.)	**Off*** Low Medium High	Change the amount of background color that is removed. This function is not available for black & white scanning.	
	+ See Software and Network User's Guide.			
	The factory settings are shown in Bold with an asterisk.			

C

Options (to USB)

Level 1	Level 2	Options	Descriptions	See Page
Options	**2-sided Scan** (MFC-L8850CDW and MFC-L9550CDW)	**Off*** 2-sided Scan: Long Edge 2-sided Scan: Short Edge	Choose the 2-sided scan mode.	See +.
	Scan Type	**Color*** Gray Black and White	Choose the scan type for your document.	
	Resolution	(When you select Color in Scan Type) 100 dpi **200 dpi*** 300 dpi 600 dpi Auto (When you select Gray in Scan Type) 100 dpi **200 dpi*** 300 dpi Auto (When you select Black and White in Scan Type) **200 dpi*** 300 dpi 200x100	Choose the scan resolution for your document.	
	+ See Software and Network User's Guide.			
	The factory settings are shown in Bold with an asterisk.			

Level 1	Level 2	Options	Descriptions	See Page
Options (continued)	**File Type**	(When you select Color or Gray in Scan Type) **PDF*** JPEG PDF/A Secure PDF Signed PDF XPS (When you select Black and White in Scan Type) **PDF*** PDF/A Secure PDF Signed PDF TIFF	Choose the file format for your document.	See +.
	Glass Scan Size	A4 **Letter*** Legal/Folio (MFC-L8850CDW and MFC-L9550CDW)	To scan an A4, Legal or Folio size document, you must change the Glass Scan Size setting.	
	File Name	XXXXXX (Date & Year)	Enter a file name for the scanned data.	
	File Size	Small **Medium*** Large	Choose the file size for color or gray scale scanning.	
	Remove Background Color	**Off*** Low Medium High	Change the amount of background color that is removed.	
	+ See Software and Network User's Guide.			
	The factory settings are shown in Bold with an asterisk.			

C

Level 1	Level 2	Options	Descriptions	See Page
Options (continued)	**Set New Default**	2-sided Scan (MFC-L8850CDW and MFC-L9550CDW) Scan Type Resolution File Type Glass Scan Size File Size Remove Background Color	Save your scan settings as the default settings.	See +.
	Factory Reset	Yes No	Restore all the scan settings you changed back to the factory settings.	
	+ See Software and Network User's Guide.			
	The factory settings are shown in Bold with an asterisk.			

Options (to E-mail Server)

Level 1	Level 2	Options	Descriptions	See Page
Options	**2-sided Scan** (MFC-L8850CDW and MFC-L9550CDW)	**Off*** 2-sided Scan: Long Edge 2-sided Scan: Short Edge	Choose the 2-sided scan mode.	See +.
	Scan Type	**Color*** Gray Black and White	Choose the scan type for your document.	
	Resolution	(When you select Color in Scan Type) 100 dpi **200 dpi*** 300 dpi 600 dpi Auto (When you select Gray in Scan Type) 100 dpi **200 dpi*** 300 dpi Auto (When you select Black and White in Scan Type) **200 dpi*** 300 dpi 200x100	Choose the scan resolution for your document.	
	+ See Software and Network User's Guide.			
	The factory settings are shown in Bold with an asterisk.			

C

Level 1	Level 2	Options	Descriptions	See Page
Options (continued)	**File Type**	(When you select Color or Gray in Scan Type) **PDF*** JPEG PDF/A Secure PDF Signed PDF XPS (When you select Black and White in Scan Type) **PDF*** PDF/A Secure PDF Signed PDF TIFF	Choose the file format for your document.	See +.
	Glass Scan Size	A4 **Letter*** Legal/Folio (MFC-L8850CDW and MFC-L9550CDW)	To scan an A4, Legal or Folio size document, you must change the Glass Scan Size setting.	
	File Size	Small **Medium*** Large	Choose the file size for color or gray scale scanning.	
	Set New Default	2-sided Scan (MFC-L8850CDW and MFC-L9550CDW) Scan Type Resolution File Type Glass Scan Size File Size	Save your scan settings as the default settings.	
	Factory Reset	Yes No	Restore all the scan settings you changed back to the factory settings.	
	+ See Software and Network User's Guide.			
	The factory settings are shown in Bold with an asterisk.			

Options (to FTP/SFTP and to Network)

Level 1	Level 2	Options	Descriptions	See Page
Options	**2-sided Scan** (MFC-L8850CDW and MFC-L9550CDW)	**Off*** 2-sided Scan: Long Edge 2-sided Scan: Short Edge	Choose the 2-sided scan mode.	See +.
	Scan Type	**Color*** Gray Black and White	Choose the scan type for your document.	
	Resolution	(When you select Color in Scan Type) 100 dpi **200 dpi*** 300 dpi 600 dpi Auto (When you select Gray in Scan Type) 100 dpi **200 dpi*** 300 dpi Auto (When you select Black and White in Scan Type) **200 dpi*** 300 dpi 200x100	Choose the scan resolution and file format for your document.	
	+ See Software and Network User's Guide.			
	The factory settings are shown in Bold with an asterisk.			

C

Level 1	Level 2	Options	Descriptions	See Page
Options (continued)	**File Type**	(When you select Color or Gray in Scan Type) **PDF*** JPEG PDF/A Secure PDF Signed PDF XPS (When you select Black and White in Scan Type) **PDF*** PDF/A Secure PDF Signed PDF TIFF	Choose the scan resolution and file format for your document.	See +.
	Glass Scan Size	A4 **Letter*** Legal/Folio (MFC-L8850CDW and MFC-L9550CDW)	To scan an A4, Legal or Folio size document, you must change the Glass Scan Size setting.	
	File Name	**BRNXXXXXXXXXXXX*** Estimate Report Order sheet Contract sheet Check Receipt <Manual>	Choose preset file names. If you choose <Manual>, you can name the file as you like.	
	File Size	Small **Medium*** Large	Choose the file size for color or gray scale scanning.	
	Remove Background Color	**Off*** Low Medium High	Change the amount of background color that is removed.	
	User Name	—	Enter the user name.	
	+ See Software and Network User's Guide.			
	The factory settings are shown in Bold with an asterisk.			

Toner

Level 1	Level 2	Options	Descriptions	See Page
Toner Life	—	—	View the approximate remaining toner life for each color.	See ◆.
Test Print	—	—	Print the Test Print page.	
Calibration	**Calibrate**	Yes No	Adjust the color density or reset calibration to the factory settings.	
	Reset	Yes No		
Registration	—	Yes No	Adjust the print position of each color automatically.	
	◆ See Advanced User's Guide.			
	The factory settings are shown in Bold with an asterisk.			

Wi-Fi Setup

Level 1	Level 2	Options	Descriptions	See Page
Setup Wizard	—	—	Configure your internal print server.	See +.
WPS/AOSS	—	—	Easily configure your wireless network settings using the one-button push method.	
WLAN Assistant	—	—	(Windows® only) You can configure your wireless network settings using the Brother CD-ROM.	
	+ See Software and Network User's Guide.			
	The factory settings are shown in Bold with an asterisk.			

C

Shortcuts

Level 1	Level 2	Level 3	Options	Descriptions	See Page
Add Shortcut	**Copy**	**Receipt**	See *Copy* on page 185.	Choose the desired settings from the preset items.	15
		Normal			
		2in1(ID)			
		2in1			
		2-sided(1⇒2)			
		2-sided(2⇒2) (MFC-L8850CDW and MFC-L9550CDW)			
		Paper Save			
	Fax	**Address**	—	Store fax numbers, so you can dial by pressing this shortcut.	16
		Fax Resolution	Standard Fine S.Fine Photo	Set the resolution for outgoing faxes.	16
		2-sided Fax (MFC-L8850CDW and MFC-L9550CDW)	Off 2-sided Scan: Long Edge 2-sided Scan: Short Edge	Choose the 2-sided fax scan mode.	16
		Contrast	Auto Light Dark	Change the lightness or darkness of faxes you send.	16
		Broadcasting	Add Number (Options) Add Number Add from Address book Search in Address book	You can send the same fax message to more than one fax number.	16
		Real Time TX	On Off	Send a fax without using the memory.	16
		Coverpage Setup	Coverpage Setup Coverpage Message Total Pages	Automatically send a cover page you programmed.	16

The factory settings are shown in Bold with an asterisk.

Level 1	Level 2	Level 3	Options	Descriptions	See Page
Add Shortcut (continued)	**Fax** (continued)	**Overseas Mode**	On Off	If you are having difficulty sending faxes overseas, set this to On.	16
		Glass Scan Size	Letter A4 Legal/Folio (MFC-L8850CDW and MFC-L9550CDW)	Adjust the scan area of the scanner glass to the size of the document.	16
	Scan	**to File**	(PC Select)	Scan a black & white or a color document into your computer.	17
		to OCR	(PC Select)	Convert your text document to an editable text file.	17
		to Image	(PC Select)	Scan a color picture into your graphics application.	17
		to USB	2-sided Scan (MFC-L8850CDW and MFC-L9550CDW) Scan Type Resolution File Type Glass Scan Size File Name File Size Remove Background Color	Scan documents into a USB flash drive.	17
		to E-mail	(PC Select)	Scan a black & white or a color document into your E-mail application.	17
The factory settings are shown in Bold with an asterisk.					

C

Level 1	Level 2	Level 3	Options	Descriptions	See Page
Add Shortcut (continued)	**Scan** (continued)	**to E-mail Server** (MFC-L8600CDW is supported only after IFAX is downloaded)	Address 2-sided Scan (MFC-L8850CDW and MFC-L9550CDW) Scan Type Resolution File Type Glass Scan Size File Size	Scan a black & white or a color document into your E-mail Server.	17
		to Network	(Profile name)	Send scanned data to a CIFS server on your local network or on the Internet.	17
		to FTP/SFTP	(Profile name)	Send scanned data via FTP or SFTP.	17
	Web	SKYDRIVE®	—	Connect the Brother machine to an Internet service. Web services may have been added and/or service names may have been changed by the provider since this document was published. Visit the Brother Solutions Center to download the Web Connect Guide at http://solutions.brother.com/.	18
		BOX	—		
		PICASA WEB ALBUMS™	—		
		GOOGLE DRIVE™	—		
		FLICKR®	—		
		FACEBOOK	—		
		EVERNOTE®	—		
		DROPBOX	—		
	Apps	NoteScan	—	Apps may have been added and/or app names may have been changed by the provider since this document was published. Visit the Brother Solutions Center to download the Web Connect Guide at http://solutions.brother.com/.	19
		Outline&Scan	—		
		Outline&Copy	—		
(Select a Shortcut to Rename/Delete)	(Choose shortcut button.)	**Edit Shortcut Name**	—	Change the shortcut name.	20
		Delete	—	Delete the shortcut.	21
The factory settings are shown in Bold with an asterisk.					

Web (More1 screen)

Level 1	Level 2	Options	Descriptions	See Page
SKYDRIVE®	—	—	Connect the Brother machine to an Internet service.	See ●.
BOX	—	—		
PICASA WEB ALBUMS™	—	—		
GOOGLE DRIVE™	—	—		
FLICKR®	—	—		
FACEBOOK	—	—		
EVERNOTE®	—	—		
DROPBOX	—	—		
	● Visit the Brother Solutions Center to download the Web Connect Guide at http://solutions.brother.com/.			
	The factory settings are shown in Bold with an asterisk.			

Apps (More1 screen)

Level 1	Level 2	Options	Descriptions	See Page
NoteScan	—	—	Connect the Brother machine to the Brother apps over the Internet.	See ●.
Outline&Scan	—	—		
Outline&Copy	—	—		
	● Visit the Brother Solutions Center to download the Web Connect Guide at http://solutions.brother.com/.			
	The factory settings are shown in Bold with an asterisk.			

USB (More2 screen)

Level 1	Level 2	Level 3	Level 4	Options	Descriptions	See Page
Scan to USB	See *to USB* on page 190					See +.
Direct Print	(Select File)	**Print Settings** (No. of Prints (001-999))	**Paper Type**	Thin **Plain Paper*** Thick Thicker Recycled Paper Bond Paper Label Envelope Env. Thin Env. Thick Glossy Paper	Set the print media type when printing directly from the USB flash drive.	68
			Paper Size	A4 **Letter*** B5(JIS) B5(ISO) A5 A5(Long Edge) A6 Executive Legal Folio 3"x5" Com-10 Monarch C5 DL	Set the paper size when printing directly from the USB flash drive.	68
	+ See Software and Network User's Guide.					
	The factory settings are shown in Bold with an asterisk.					

Level 1	Level 2	Level 3	Level 4	Options	Descriptions	See Page
Direct Print (continued)	(Select File) (continued)	**Print Settings** (No. of Prints (001-999)) (continued)	**Multiple Page**	**1in1*** 2in1 4in1 9in1 16in1 25in1 1 in 2x2 pages 1 in 3x3 pages 1 in 4x4 pages 1 in 5x5 pages	Set the page layout when printing multiple pages directly from the USB flash drive.	68
			Orientation	**Portrait*** Landscape	Set the page orientation when printing directly from the USB flash drive.	68
			2-sided	**Off*** Long Edge Short Edge	Choose the 2-sided print format when printing directly from the USB flash drive.	68
			Collate	**On*** Off	Enable or disable page collation when printing directly from the USB flash drive.	68
			Tray Use	**Auto*** MP Only Tray#1 Only Tray#2 Only (Tray#2 Only appears only if you installed Tray 2.)	Choose the tray that will be used for printing directly from the USB flash drive.	68
			Print Quality	**Normal*** Fine	Set the print quality option when printing directly from the USB flash drive.	68
			PDF Option	**Document*** Document&Markup Document&Stamps	Set the USB direct print setting whether to print comments (Markup) or stamps in the PDF file along with the text.	68
	+ See Software and Network User's Guide.					
	The factory settings are shown in Bold with an asterisk.					

C

Level 1	Level 2	Level 3	Level 4	Options	Descriptions	See Page
Direct Print (continued)	**Index Print**	—	—	—	Print a thumbnail page.	68
	DefaultSettings	**Paper Type**	—	Thin **Plain Paper*** Thick Thicker Recycled Paper Bond Paper Label Envelope Env. Thin Env. Thick Glossy Paper	Set the default media type when printing directly from the USB flash drive.	70
		Paper Size	—	A4 **Letter*** B5(JIS) B5(ISO) A5 A5(Long Edge) A6 Executive Legal Folio 3"x5" Com-10 Monarch C5 DL	Set the default paper size when printing directly from the USB flash drive.	70
	+ See Software and Network User's Guide.					
	The factory settings are shown in Bold with an asterisk.					

Level 1	Level 2	Level 3	Level 4	Options	Descriptions	See Page
Direct Print (continued)	DefaultSettings (continued)	**Multiple Page**	—	**1in1*** 2in1 4in1 9in1 16in1 25in1 1 in 2x2 pages 1 in 3x3 pages 1 in 4x4 pages 1 in 5x5 pages	Set the default page style when printing multiple pages directly from the USB flash drive.	70
		Orientation	—	**Portrait*** Landscape	Set the default page orientation when printing directly from the USB flash drive.	70
		Collate	—	**On*** Off	Enable or disable the default page collation when printing directly from the USB flash drive.	70
		Print Quality	—	**Normal*** Fine	Set the default print quality option when printing directly from the USB flash drive.	70
		PDF Option	—	**Document*** Document&Markup Document&Stamps	Set the default USB direct print setting to print comments (Markup) or stamps in the PDF file along with the text.	70
		Index Print	—	**Simple*** Details	Set the default index print option to simple format or details.	70
	+ See Software and Network User's Guide.					
	The factory settings are shown in Bold with an asterisk.					

C

Entering text

When you must enter text into the machine the keyboard will appear on the Touchscreen.

Press A 1 @ to cycle among letters, numbers and special characters.

Press ⬆ aA to cycle between upper and lower case letters.

Inserting spaces

To enter a space, press `Space` or ▶.

Making corrections

If you entered an incorrect character and want to change it, use the arrow buttons to move the cursor under the incorrect character. Press ⌫, and then enter the correct character. You can also insert letters by moving the cursor and entering a character.

If the screen does not display ◀, press ⌫ repeatedly until you have erased the incorrect character. Enter the correct characters.

NOTE

- The characters available may differ depending on your country.
- The keyboard layout may differ depending on the settings you are entering.

D Specifications

General

NOTE

This chapter provides a summary of the machines' specifications. For additional specifications visit http://www.brother.com/.

Model		MFC-L8600CDW	MFC-L8850CDW	MFC-L9550CDW
Printer Type		Laser		
Print Method		Electrophotographic Laser Printer (single-pass)		
Memory Capacity	Standard	256 MB		
	Optional	1 slot: DDR2 SO-DIMM (144-pin) up to 256 MB		
LCD (liquid crystal display)		3.7 in. (93.4 mm) TFT Color Touchscreen LCD [1] and Touchpanel	4.85 in. (123.2 mm)TFT Color Touchscreen LCD [1] and Touchpanel	
Power Source		110 - 120 V AC 50/60 Hz		
Power Consumption [2] (Average)	Peak	Approx. 1190 W		
	Printing	Approx. 565 W at 77 °F (25 °C)		
	Printing (Quiet Mode)	Approx. 375 W at 77 °F (25 °C)		
	Copying	Approx. 565 W at 77 °F (25 °C)		
	Copying (Quiet Mode)	Approx. 375 W at 77 °F (25 °C)		
	Ready	Approx. 65 W at 77 °F (25 °C)		
	Sleep	Approx. 9.5 W	Approx. 10.0 W	
	Deep Sleep	Approx. 1.7 W	Approx. 1.8 W	
	Power Off [3 4]	Approx. 0.02 W		

Model	MFC-L8600CDW	MFC-L8850CDW	MFC-L9550CDW
Dimensions	MFC-L8600CDW 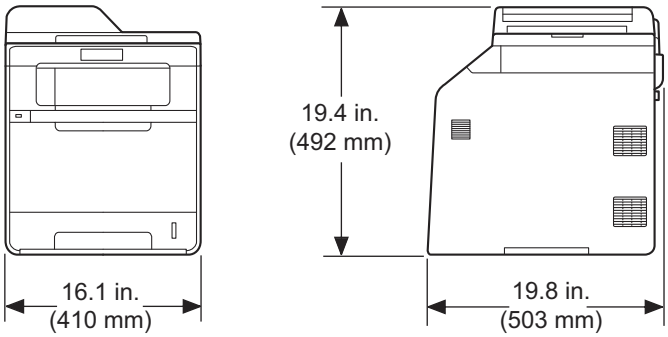 		
	MFC-L8850CDW, MFC-L9550CDW 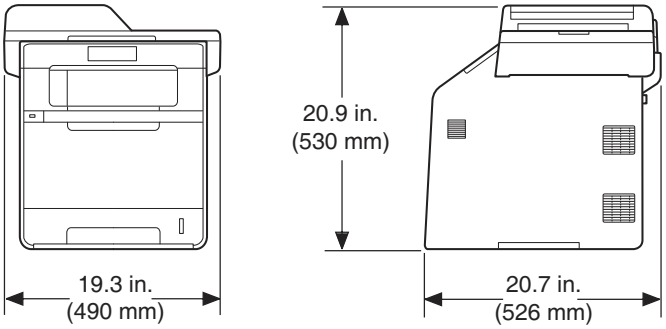 		
Weights (with supplies)	63.5 lb (28.8 kg)	67.4 lb (30.6 kg)	

1 Measured diagonally

2 USB connections to computer

3 Measured according to IEC 62301 Edition 2.0

4 Power consumption varies slightly depending on the usage environment or part wear.

Model			MFC-L8600CDW	MFC-L8850CDW	MFC-L9550CDW
Noise Level	Sound Pressure	Printing	LpAm = 55dB (A)	LpAm = 56dB (A)	
		Printing(Quiet Mode)	LpAm = 52dB (A)	LpAm = 53dB (A)	
		Ready	LpAm = 28 dB (A)		
	Sound Power	Printing (Color)	LWAd = 6.73 B (A)	LWAd = 6.71 B (A)	
		Printing (Black & White)	LWAd = 6.70 B (A)	LWAd = 6.71 B (A)	
		Printing(Quiet Mode)	LWAd = 6.40 B (A)	LWAd = 6.36 B (A)	
		Ready	LWAd = 4.05 B (A)		
Temperature		Operating	50 °F to 90 °F (10 to 32 °C)		
		Storage	32 °F to 104 °F (0 to 40 °C)		
Humidity		Operating	20 to 80% (without condensation)		
		Storage	10 to 90% (without condensation)		
ADF (automatic document feeder)			Up to 35 pages	Up to 50 pages	
			For best results we recommend: Temperature: 68°F to 86°F (20 to 30 °C) Humidity: 50% to 70% Paper: 20 lb (80 g/m^2)		

Document Size

Model		MFC-L8600CDW	MFC-L8850CDW	MFC-L9550CDW
Document Size (1-sided)	ADF Width	5.8 to 8.5 in. (147.3 to 215.9 mm)		
	ADF Length	5.8 to 14.0 in. (147.3 to 355.6 mm)		
	Scanner Glass Width	Max. 8.5 in. (215.9 mm)		
	Scanner Glass Length	Max. 11.7 in. (297.0 mm)	Max. 14.0 in. (355.6 mm)	
Document Size (2-sided)	ADF Width	—	5.8 to 8.5 in. (147.3 to 215.9 mm)	
	ADF Length	—	5.8 to 14.0 in. (147.3 to 355.6 mm)	

Print media

Model			MFC-L8600CDW	MFC-L8850CDW	MFC-L9550CDW
Paper Input	Paper Tray 1 (Standard)	Paper Type	Plain Paper, Thin Paper, Recycled Paper		
		Paper Size	Letter, A4, B5 (JIS), A5, A5 (Long Edge), A6, Executive, Legal, Folio		
		Paper Weight	16 to 28 lb (60 to 105 g/m^2)		
		Maximum Paper Capacity	Up to 250 sheets of 20 lb (80 g/m^2) Plain Paper		
	Multi-purpose tray (MP tray)	Paper Type	Plain Paper, Thin Paper, Thick Paper, Thicker Paper, Recycled Paper, Bond Paper, Label, Envelope, Env.Thin, Env.Thick, Glossy Paper		
		Paper Size	Width: 3.0 to 8.5 in (76.2 to 215.9 mm) Length: 5 to 14 in (127 to 355.6 mm)		
		Paper Weight	16 to 43 lb (60 to 163 g/m^2)		
		Maximum Paper Capacity	Up to 50 sheets of 20 lb (80 g/m2) Plain paper		
	Paper Tray 2 (Optional)	Paper Type	Plain Paper, Thin Paper, Recycled Paper		
		Paper Size	Letter, A4, B5 (JIS), A5, Executive, Legal, Folio		
		Paper Weight	16 to 28 lb (60 to 105 g/m^2)		
		Maximum Paper Capacity	Up to 500 sheets of 20 lb (80 g/m2) Plain paper		
Paper Output [1]	Face-Down Output Tray		Up to 150 sheets of 20 lb (80 g/m^2) Plain Paper (face-down delivery to the face-down output paper tray)		
	Face-Up Output Tray		One sheet (face-up delivery to the face-up output tray)		
2-sided	Automatic 2-sided Printing	Paper Type	Plain Paper, Thin Paper, Recycled Paper, Glossy Paper		
		Paper Size	Letter, Legal, Folio		
		Paper Weight	16 to 28 lb (60 to 105 g/m^2)		

[1] For labels, we recommend removing printed pages from the output paper tray immediately after they exit the machine to avoid the possibility of smudging.

Fax

Model	MFC-L8600CDW	MFC-L8850CDW	MFC-L9550CDW
Compatibility	ITU-T Super Group 3		
Coding System	MH/MR/MMR/JBIG		
Modem Speed	33,600 bps (with Automatic Fallback)		
2-sided Print Receiving	Yes		
Automatic 2-sided Sending	—	Yes (from ADF)	
Scanning Width	Max. 8.19 in. (208 mm)		
Printing Width	Max. 8.19 in. (208 mm)		
Gray Scale	8 bit/256 levels		
Resolution	Standard 203 × 98 dpi		
	Fine 203 × 196 dpi		
	Superfine 203 × 392 dpi		
	Photo 203 × 196 dpi		
Address Book	300 entries		
Groups	Up to 20		
Broadcasting	350 (300 Address Book/50 Manual Dial)		
Automatic Redial	Yes, 1 time after 5 minutes		
Memory Transmission	Up to 500 [1] pages		
Out of Paper Reception	Up to 500 [1] pages		

[1] ‘Pages’ refers to the ‘ITU-T Test Chart #1’ (a typical business letter, Standard resolution, JBIG code). Specifications and printed materials are subject to change without prior notice.

Copy

Model		MFC-L8600CDW	MFC-L8850CDW	MFC-L9550CDW
Copy Width		Max. 8.27 in. (210 mm)		
Automatic 2-sided Copy		—	Yes (from ADF)	
Multiple Copies		Stacks or Sorts up to 99 pages		
Reduce/Enlarge		25% to 400% (in increments of 1%)		
Resolution		Up to 1200 × 600 dpi		
First Copy Out Time [1]	Black & White	Less than 18 seconds at 73.4 °F (23 °C) / 115 V		
	Color	Less than 20 seconds at 73.4 °F (23 °C) / 115 V		

[1] From Ready mode and standard tray

Scanner

Model		MFC-L8600CDW	MFC-L8850CDW	MFC-L9550CDW
Color / Black		Yes / Yes		
TWAIN Compliant		Yes (Windows® XP / Windows Vista® / Windows® 7 / Windows® 8 / Mac OS X v10.7.5 / 10.8.x / 10.9.x [1])		
WIA Compliant		Yes (Windows® XP / Windows Vista® / Windows® 7 / Windows® 8)		
ICA Compliant		Yes (Mac OS X v10.7.5 / 10.8.x / 10.9.x)		
Color Depth	Color	48 bit color processing (Input) 24 bit color processing (Output)		
	Gray Scale	16 bit color processing (Input) 8 bit color processing (Output)		
Resolution		Up to 19200 × 19200 dpi (interpolated) [2] Up to 1200 × 2400 dpi (optical) [2] (from Scanner Glass) Up to 1200 × 600 dpi (optical) [2] (from ADF)		
Scanning Width		Max. 8.27 in. (210 mm)		
Automatic 2-sided Scanning		—	Yes (from ADF)	

1 For the latest driver updates for the version of OS X you are using, visit http://solutions.brother.com/.

2 Maximum 1200 × 1200 dpi scanning with the WIA driver in Windows® XP, Windows Vista®, Windows® 7 and Windows® 8 (resolution up to 19200 × 19200 dpi can be selected by using the scanner utility)

Printer

Model		MFC-L8600CDW	MFC-L8850CDW	MFC-L9550CDW
Automatic 2-sided Print		Yes		
Emulations		PCL6, BR-Script3 (PostScript® 3™)		
Resolution		600 × 600 dpi 2400 dpi (2400 × 600) quality		
Print Speed (2-sided)	Black & White	Up to 14 sides/minute (Up to 7 sheets/minute) (Letter size) [1]		
	Color	Up to 14 sides/minute (Up to 7 sheets/minute) (Letter size) [1]		
Print Speed	Black & White	Up to 30 pages/minute (Letter size) [1]	Up to 32 pages/minute (Letter size) [1]	
	Color	Up to 30 pages/minute (Letter size) [1]	Up to 32 pages/minute (Letter size) [1]	
First Print Time [2]	Black & White	Less than 15 seconds at 73.4 °F (23 °C) / 115 V		
	Color	Less than 15 seconds at 73.4 °F (23 °C) / 115 V		

[1] The print speed may vary depending on the type of document you print.

[2] From Ready mode and standard tray

Interfaces

Model	MFC-L8600CDW	MFC-L8850CDW	MFC-L9550CDW
USB	Hi-Speed USB 2.0 [1] [2] We recommend using a USB 2.0 cable (Type A/B) that is no more than 6 feet (2.0 meters) long.		
Ethernet [3]	10BASE-T / 100BASE-TX Use a straight-through Category 5 (or greater) twisted-pair cable.		
Wireless LAN [3]	IEEE 802.11b/g/n (Infrastructure mode/Ad-hoc mode) IEEE 802.11g (Wi-Fi Direct)		

[1] Your machine has a Hi-Speed USB 2.0 interface. The machine can also be connected to a computer that has a USB 1.1 interface.

[2] Third party USB ports are not supported.

[3] For detailed network specifications, see *Network* on page 221 and Software and Network User's Guide.

Network

NOTE

For more information about the Network specifications, see Software and Network User's Guide.

Model		MFC-L8600CDW	MFC-L8850CDW	MFC-L9550CDW
LAN		You can connect your machine to a network for Network Printing, Network Scanning, PC-FAX Send, PC-FAX Receive (Windows® only) and Remote Setup [1]. Also included is Brother BRAdmin Light [2] [3] Network Management software.		
Protocols	IPv4	ARP, RARP, BOOTP, DHCP, APIPA(Auto IP), WINS/NetBIOS name resolution, DNS Resolver, mDNS, LLMNR responder, LPR/LPD, Custom Raw Port/Port9100, POP3, SMTP Client, IPP/IPPS, FTP Client and Server, CIFS Client, TELNET Server, SNMPv1/v2c/v3, HTTP/HTTPS server, TFTP client and server, ICMP, Web Services (Print/Scan), SNTP Client, LDAP [4], IMAP4		
	IPv6	NDP, RA, DNS resolver, mDNS, LLMNR responder, LPR/LPD, Custom Raw Port/Port9100, POP3, IPP/IPPS, FTP Client and Server, CIFS Client, TELNET Server, SNMPv1/v2c/v3, HTTP/HTTPS server, TFTP client and server, SMTP Client, ICMPv6, SNTP Client, Web Services (Print/Scan), LDAP [4], IMAP4		
Security Protocols	Wired	APOP, SMTP-AUTH, SSL/TLS (IPPS, HTTPS, SMTP, POP3, IMAP4), SNMP v3, 802.1x (EAP-MD5, EAP-FAST, PEAP, EAP-TLS, EAP-TTLS), Kerberos, IPSec		
	Wireless	APOP, SMTP-AUTH, SSL/TLS (IPPS, HTTPS, SMTP, POP3, IMAP4), SNMP v3, 802.1x (LEAP, EAP-FAST, PEAP, EAP-TLS, EAP-TTLS), Kerberos, IPSec		
Wireless Network Security		WEP 64/128 bit, WPA-PSK (TKIP/AES), WPA2-PSK (AES)		
Wireless Network Setup Support Utility	**AOSS™**	Yes		
	WPS	Yes		

1 See *Computer requirements* on page 223.

2 (Windows®) Brother BRAdmin Light is available on the CD-ROM provided with the machine.
(Macintosh) Brother BRAdmin Light is available as a download from http://solutions.brother.com/.

3 (Windows®) If you require more advanced machine management, use the latest Brother BRAdmin Professional utility version that is available as a download from http://solutions.brother.com/.

4 MFC-L8600CDW is supported only after IFAX is downloaded.

Direct Print feature

Model	MFC-L8600CDW	MFC-L8850CDW	MFC-L9550CDW
Compatibility	PDF version 1.7 [1], JPEG, Exif + JPEG, PRN (created by Brother printer driver), TIFF (scanned by all Brother MFC or DCP models), XPS version 1.0		
Interface	USB direct interface		

[1] PDF data including a JBIG2 image file, a JPEG2000 image file or a transparency file is not supported.

Computer requirements

Computer Platform & Operating System Version		PC Interface			Processor	Hard Disk Space to install	
		USB [2]	10/100Base-TX (Ethernet)	Wireless 802.11b/g/n		For Drivers	For Applications
Windows® Operating System	Windows® XP Home [1 4] Windows® XP Professional [1 4]	Printing PC-FAX [3] Scanning			32bit (x86) or 64bit (x64) processor	150 MB	500 MB
	Windows® XP Professional x64 Edition [1 4]				64bit (x64) processor		
	Windows Vista® [1 4]				32bit (x86) or 64bit (x64) processor	500 MB	1.2 GB
	Windows® 7 [1 4]					650 MB	
	Windows® 8 [1 4]						
	Windows® 8.1 [1 4]						
	Windows Server® 2003	N/A	Printing		32bit (x86) or 64bit (x64) processor	50 MB	N/A
	Windows Server® 2003 x64 Edition				64bit (x64) processor		
	Windows Server® 2008				32bit (x86) or 64bit (x64) processor		
	Windows Server® 2008 R2				64bit (x64) processor		
	Windows Server® 2012						
	Windows Server® 2012 R2						
Macintosh Operating System	Mac OS X v10.7.5	Printing PC-FAX (Send) [3] Scanning			Intel® Processor	80 MB	400 MB
	OS X v10.8.x						
	OS X v10.9.x						

1 For WIA, 1200 x 1200 resolution. Brother Scanner Utility enables enhancing up to 19200 x 19200 dpi.

2 Third party USB ports are not supported.

3 PC-FAX supports black and white only.

4 Nuance™ PaperPort™ 12SE supports Windows® XP Home (SP3 or greater), Windows® XP Professional (SP3 or greater), Windows® XP Professional x64 Edition (SP2 or greater), Windows Vista® (SP2 or greater), Windows® 7 and Windows® 8.

For the latest driver updates, visit http://solutions.brother.com/.

All trademarks, brand and product names are the property of their respective companies.

Supplies

Model			MFC-L8600CDW	MFC-L8850CDW	MFC-L9550CDW	Order No.
Toner Cartridge	In the box	Black	Approx. 2,500 pages Letter or A4 page [1]		Approx. 6,000 pages Letter or A4 page [1]	—
		Cyan Magenta Yellow	Approx. 1,500 pages Letter or A4 page [1]		Approx. 6,000 pages Letter or A4 page [1]	—
	Standard	Black	Approx. 2,500 pages Letter or A4 page [1]		—	TN-331BK
		Cyan Magenta Yellow	Approx. 1,500 pages Letter or A4 page [1]		—	TN-331C TN-331M TN-331Y
	High Yield	Black	Approx. 4,000 pages Letter or A4 page [1]		—	TN-336BK
		Cyan Magenta Yellow	Approx. 3,500 pages Letter or A4 page [1]		—	TN-336C TN-336M TN-336Y
	Super High Yield	Black Cyan Magenta Yellow	—		Approx. 6,000 pages Letter or A4 page [1]	TN-339BK TN-339C TN-339M TN-339Y
Drum Unit			Approx. 25,000 pages Letter or A4 page (1 page / job) [2]			DR-331CL
Belt Unit			Approx. 50,000 pages Letter or A4 page (5 pages / job) [3]			BU-320CL
Waste Toner Box			Approx. 50,000 pages Letter or A4 page [4]			WT-320CL

[1] Approximate cartridge yield is declared in accordance with ISO/IEC 19798.

[2] Drum life is approximate and may vary by type of use.

[3] Belt life is approximate and may vary by type of use.

[4] Waste Toner Box life is approximate and may vary by type of use.

Important information for the toner cartridge life

Color/Mono setting on the printer driver

Users can change the Color/Mono settings on the printer driver as follows:

- **Auto**

  The machine checks the content of the document for color. If color is detected anywhere in the document, it will print the whole of the document using all the colors. In other words, it will mix some of the toners to help achieve every shade detected in the document, increasing the density of toner applied to the page. If no color content is detected, it will print the document in monochrome.

  The default setting on your machine is **Auto**.

NOTE

The machine's color sensor is very sensitive and may perceive faded black text or an off-white background as color. If you know that your document is black and white and you want to conserve color toner, select **Mono** mode.

- **Color**

  Whether the document contains color or just monochrome, your machine will print the document using all the colors.

- **Mono**

  Select this mode if the document has only black and grayscale text and/or objects. If your document contains color, this mode prints the document in 256 levels of gray using the black toner.

NOTE

If either the Cyan, Magenta or Yellow toner reaches the end of its life while printing a color document, the print job cannot be completed. You can cancel your print job and choose to start the print job again in **Mono** mode, as long as Black toner is available.

For more information about the settings in the printer driver, see Software and Network User's Guide.

Toner Cartridge Life

This product detects the life of the toner cartridges using the following two methods:

- **Detection by counting the dots of each color that are necessary to create an image**
- **Detection by counting the rotations of the developer roller**

  This product has a function that will count the dots of each color used to print every document and the rotations of each toner cartridge's developer roller. The print operation will stop when either one of the upper limits are reached. The upper limit is set above the number of dots or rotations that would be required for the cartridge to perform consistently with its advertised page yield (for more information on page yield, please visit http://www.brother.com/pageyield). This function is intended to reduce the risk of poor print quality and damage to the machine.

There are two messages that indicate when the toner nears or reaches its life end: `Toner Low` and `Replace Toner`.

`Toner Low` is displayed on the LCD when the number of dots or rotations of the developer roller nears its maximum count: `Replace Toner` is displayed on the LCD when the number of dots or rotations of the developer roller reaches its maximum count.

Color Correction

The number of developer roller rotations that are counted may not only be for normal operations such as printing and copying, but also for machine adjustments, such as Color Calibration and Color Registration.

■ Color Calibration (Adjustment of Color Density)

To obtain stable print quality, the density of each toner cartridge needs to be maintained at a fixed value. If the density balance between the colors cannot be kept, the tint becomes unstable, and accurate color reproduction becomes unavailable. The toner density can change due to chemical changes to the toner that affect its electrical charge, deterioration of the developer unit, and temperature and humidity levels in the device. When calibration occurs, the density level adjustment test patterns are printed on the belt unit.

Calibration is mainly performed at the following times:

- When the user manually selects calibration from the operation panel or the printer driver. (Please perform calibration if color density needs to be improved.)
- When a used toner cartridge is replaced with a new one.
- When the printer senses that the ambient temperature and humidity have changed.
- When a specified number of printed pages is reached.

■ Color Registration (Correction of Color Position)

In this device, the drum unit and developer unit are prepared for black (K), yellow (Y), magenta (M), and cyan (C), respectively. Four color images are combined into one image, and therefore color registration errors (i.e., how the four color images align) might occur. When registration errors occur, registration correction test patterns are printed on the belt unit.

Registration is mainly performed at the following times:

- When the user manually selectsregistration from the operation panel.
  (Please perform registration if a color registration error needs to be corrected.)
- When a specified number of printed pages is reached.

E Index

A

Address Book
  changing 64
  setting up 63
  using 62
ADF (automatic document feeder)
  using 39
Answering machine (TAD)
  connecting 58
Apple Macintosh
  See Software and Network User's Guide.
Automatic
  Fax Receive 46
    Easy Receive 48
  Fax Redial 62

B

Back 9
Belt unit
  replacing 96
Brother
  apps 19, 205
  Brother numbers i
  Customer Service ii
  FAQs (frequently asked questions) i
  product support ii
  service centers ii
  Supplies ii
  warranties
    Notice-Disclaimer iv

C

Cancel 9
Cleaning
  corona wires 87
  scanner 108
Connecting
  external TAD (answering machine) 57
  external telephone 59
Control panel overview 8
ControlCenter2 (Macintosh)
  See Software and Network User's Guide.
ControlCenter4 (Windows®)
  See Software and Network User's Guide.
Cordless telephone (non-Brother) 60
Custom Ringing 54

D

Data Ident-A-Call 54
Dialing
  a pause 63
  Address Book 62
  automatic fax redial 62
  manual 62
Dimensions 212
Direct print 67, 68
  specification 222
Distinctive Ring 55
  choosing ring pattern 56
  setting ring pattern 56
  turning off 57
Document
  how to load 39, 40
Drum unit
  cleaning 87
  replacing 90

E

Envelopes 34, 35, 37
Equalization 142
Error messages on Touchscreen 111
  Comm. Error 112
  No Paper 114
  Out of Memory 115
  Print Unable XX 116
  Scan Unable 117
Extension telephone, using 61
External telephone, connecting 59

F

Fax codes
  changing 61
  Fax Receive Code 61
  Telephone Answer Code 61
Fax, stand-alone
  receiving 44
    Easy Receive 48
    from extension telephone 61
    Ring Delay, setting 47
    telephone line interference 142
  sending 41
    telephone line interference 142
Fax/Tel mode
  answering at extension telephones 61
  Easy Receive 48
  F/T Ring Time (double-ring) 47
  Fax Receive Code 61
  Ring Delay 47
  Telephone Answer Code 61
Folio 31, 35

G

Gray scale 216, 218

H

HELP
  Settings Tables 154
  Touchscreen messages 153
Home 9
Hook 60

I

Ident-A-Call 54
Ident-A-Ring 54

J

Jacks
  EXT
    external telephone 59
    TAD (answering machine) 57

L

Labels 25, 34, 35, 38

M

Machine information
  firmware version 151
  how to reset the machine 152
  Reset operations 151
  serial number 151
Macintosh
  See Software and Network User's Guide.
Maintenance, routine
  replacing
    belt unit 96
    drum unit 90
    toner cartridges 81
    waste toner box 101
Manual
  dialing 62
  receive 44, 46
Memory 211
Mode, entering
  copy 65
  fax 41
  scan 75
Multi-line connections (PBX) 59

N

Network
  faxing
    See Software and Network User's Guide.
  printing
    See Software and Network User's Guide.
  scanning
    See Software and Network User's Guide.
Network connectivity 220
NFC (Near Field Communication) Reader .8
Nuance™ PaperPort™ 12SE
  See Software and Network User's Guide and Help in the PaperPort™ 12SE application to access How-to-Guides.

O

Out of Memory message 115

P

Paper 34
  how to load 23
    in multi-purpose tray (MP tray) 25
    in paper tray 23
  recommended 34, 35
  size 31, 34
  tray capacity 35
  type 31, 34
Pause 63
PC-FAX
  See Software and Network User's Guide.
Personalized Ring 54
Presto! PageManager
  See Software and Network User's Guide and Help in the Presto! PageManager application.
Print
  difficulties 133, 135
  document from your computer 71
  drivers 219
  quality 143
  resolution 219
  specifications 219
Printing
  See Software and Network User's Guide.
Programming your machine 153

Q

Quality
  printing 143

R

Redial 62
Remote Setup
  See Software and Network User's Guide.
Replacing
  belt unit 96
  drum unit 90
  toner cartridges 81
  waste toner box 101
Reports
  Transmission Verification 43
Resolution
  copy 217
  fax (standard, fine, superfine, photo) . 216
  print 219
  scan 218
Ring Delay, setting 47
RingMaster 54

S

Scan a document to a computer 72
Scanner glass
  using 40
Scanning
  See Software and Network User's Guide.
Serial number
  how to find .....See inside front cover
Service centers ii
Settings Tables 154
SimpleBiz Fax & Alternate Number Ringing 54
Smart Ring 54
Station ID 21
Supply .....ii, 77, 78, 79

E

T

TAD (telephone answering device), external 44, 46
connecting 57, 58
recording OGM 59
Teen Ring 54
Telephone line
connections 58
difficulties 135
interference 142
multi-line (PBX) 59
Text, entering 210
Toner cartridge life 225
Toner cartridges
replacing 81
Touchscreen LCD (liquid crystal display) 8, 153
Troubleshooting 133
document jam 122, 123
error messages on Touchscreen 111
if you are having difficulty
copy quality 138
incoming calls 138
network 140
paper handling 134
print quality 143
printing 133, 135
receiving faxes 135
scanning 139
sending faxes 137
software 139
telephone line 142
maintenance messages on Touchscreen 111
paper jam 124, 125, 126, 128, 131

V

Voice Mail 54
VoIP 142

W

Warranties .....in the box
Waste toner box
replacing 101
Weights 212
Wi-Fi Direct™ 13
Windows®
See Software and Network User's Guide.
Wireless Network
See Software and Network User's Guide.
World Wide Web i

Brother International Corporation
200 Crossing Boulevard
P.O. Box 6911
Bridgewater, NJ 08807-0911 USA

Brother International Corporation (Canada) Ltd.
1 rue Hôtel de Ville,
Dollard-des-Ormeaux, QC, Canada H9B 3H6

brother

Visit us on the World Wide Web
http://www.brother.com/

These machines are approved for use in the country of purchase only. Local Brother companies or their dealers will only support machines purchased in their own countries.

Brother Earth

www.brotherearth.com